NFPA 14

Standard for the Installation of Standpipe and Hose Systems

2007 Edition

NFPA, 1 Batterymarch Park, Quincy, MA 02169-7471
An International Codes and Standards Organization

Copyright National Fire Protection Association
Provided by IHS under license with NFPA
No reproduction or networking permitted without license from IHS

Not for Resale

IMPORTANT NOTICES AND DISCLAIMERS CONCERNING NFPA DOCUMENTS

NOTICE AND DISCLAIMER OF LIABILITY CONCERNING THE USE OF NFPA DOCUMENTS

NFPA codes, standards, recommended practices, and guides, of which the document contained herein is one, are developed through a consensus standards development process approved by the American National Standards Institute. This process brings together volunteers representing varied viewpoints and interests to achieve consensus on fire and other safety issues. While the NFPA administers the process and establishes rules to promote fairness in the development of consensus, it does not independently test, evaluate, or verify the accuracy of any information or the soundness of any judgments contained in its codes and standards.

The NFPA disclaims liability for any personal injury, property or other damages of any nature whatsoever, whether special, indirect, consequential or compensatory, directly or indirectly resulting from the publication, use of, or reliance on this document. The NFPA also makes no guaranty or warranty as to the accuracy or completeness of any information published herein.

In issuing and making this document available, the NFPA is not undertaking to render professional or other services for or on behalf of any person or entity. Nor is the NFPA undertaking to perform any duty owed by any person or entity to someone else. Anyone using this document should rely on his or her own independent judgment or, as appropriate, seek the advice of a competent professional in determining the exercise of reasonable care in any given circumstances.

The NFPA has no power, nor does it undertake, to police or enforce compliance with the contents of this document. Nor does the NFPA list, certify, test or inspect products, designs, or installations for compliance with this document. Any certification or other statement of compliance with the requirements of this document shall not be attributable to the NFPA and is solely the responsibility of the certifier or maker of the statement.

Copyright National Fire Protection Association
Provided by IHS under license with NFPA
No reproduction or networking permitted without license from IHS
Not for Resale

ADDITIONAL NOTICES AND DISCLAIMERS

Updating of NFPA Documents

Users of NFPA codes, standards, recommended practices, and guides should be aware that these documents may be superseded at any time by the issuance of new editions or may be amended from time to time through the issuance of Tentative Interim Amendments. An official NFPA document at any point in time consists of the current edition of the document together with any Tentative Interim Amendments and any Errata then in effect. In order to determine whether a given document is the current edition and whether it has been amended through the issuance of Tentative Interim Amendments or corrected through the issuance of Errata, consult appropriate NFPA publications such as the National Fire Codes® Subscription Service, visit the NFPA website at www.nfpa.org, or contact the NFPA at the address listed below.

Interpretations of NFPA Documents

A statement, written or oral, that is not processed in accordance with Section 6 of the Regulations Governing Committee Projects shall not be considered the official position of NFPA or any of its Committees and shall not be considered to be, nor be relied upon as, a Formal Interpretation.

Patents

The NFPA does not take any position with respect to the validity of any patent rights asserted in connection with any items which are mentioned in or are the subject of NFPA codes, standards, recommended practices, and guides, and the NFPA disclaims liability for the infringement of any patent resulting from the use of or reliance on these documents. Users of these documents are expressly advised that determination of the validity of any such patent rights, and the risk of infringement of such rights, is entirely their own responsibility.

NFPA adheres to applicable policies of the American National Standards Institute with respect to patents. For further information contact the NFPA at the address listed below.

Law and Regulations

Users of these documents should consult applicable federal, state, and local laws and regulations. NFPA does not, by the publication of its codes, standards, recommended practices, and guides, intend to urge action that is not in compliance with applicable laws, and these documents may not be construed as doing so.

Copyrights

This document is copyrighted by the NFPA. It is made available for a wide variety of both public and private uses. These include both use, by reference, in laws and regulations, and use in private self-regulation, standardization, and the promotion of safe practices and methods. By making this document available for use and adoption by public authorities and private users, the NFPA does not waive any rights in copyright to this document.

Use of NFPA documents for regulatory purposes should be accomplished through adoption by reference. The term "adoption by reference" means the citing of title, edition, and publishing information only. Any deletions, additions, and changes desired by the adopting authority should be noted separately in the adopting instrument. In order to assist NFPA in following the uses made of its documents, adopting authorities are requested to notify the NFPA (Attention: Secretary, Standards Council) in writing of such use. For technical assistance and questions concerning adoption of NFPA documents, contact NFPA at the address below.

For Further Information

All questions or other communications relating to NFPA codes, standards, recommended practices, and guides and all requests for information on NFPA procedures governing its codes and standards development process, including information on the procedures for requesting Formal Interpretations, for proposing Tentative Interim Amendments, and for proposing revisions to NFPA documents during regular revision cycles, should be sent to NFPA headquarters, addressed to the attention of the Secretary, Standards Council, NFPA, 1 Batterymarch Park, P.O. Box 9101, Quincy, MA 02269-9101.

For more information about NFPA, visit the NFPA website at www.nfpa.org.

Copyright National Fire Protection Association
Provided by IHS under license with NFPA
No reproduction or networking permitted without license from IHS
Not for Resale

Copyright © 2006 National Fire Protection Association. All Rights Reserved.

NFPA 14

Standard for the

Installation of Standpipe and Hose Systems

2007 Edition

This edition of NFPA 14, *Standard for the Installation of Standpipe and Hose Systems*, was prepared by the Technical Committee on Standpipes and acted on by NFPA at its June Association Technical Meeting held June 4–8, 2006, in Orlando, FL. It was issued by the Standards Council on July 28, 2006, with an effective date of August 17, 2006, and supersedes all previous editions.

This edition of NFPA 14 was approved as an American National Standard on August 17, 2006.

Origin and Development of NFPA 14

This standard dates from 1912, when an initial report was made by the Committee on Standpipe and Hose Systems. The report was amended in 1914 and adopted by the Association in 1915. Revisions were adopted in 1917. Additional revisions were submitted by the Committee on Field Practice and adopted in 1926, 1927, 1931, 1938 (included action by the NFPA Board of Directors), 1941, and 1945. The Committee on Standpipes recommended revisions adopted in 1949, 1952, 1963, 1968, 1969, 1970, 1971, 1973, 1974, 1976, 1978, 1980, 1982, 1985, and 1990.

The 1993 edition of NFPA 14 was a complete reorganization of the document. The "user friendliness" of NFPA 14 was evaluated, and numerous changes followed. The standard was arranged to provide for a logical system design approach where designing and installing a standpipe system.

Substantive changes to the 1993 edition were the result of experience with standpipe systems under fire conditions. Flow rates, pressures, and the specific location of the hose connections were studied to determine optimum combinations for each factor.

The 1996 edition of NFPA 14 was a continuation of the changes that were initiated for the 1993 edition. Some definitions were expanded, and certain requirements for piping materials, pipe support, waterflow alarms, valves, fire department connections, system testing, and water supplies were revised. In addition, a number of editorial changes were made to improve the user friendliness of the document.

The 2000 edition of NFPA 14 incorporated requirements for hydrants, hose houses, and master streams previously contained in NFPA 24, *Standard for the Installation of Private Fire Service Mains and Their Appurtenances*. Also included in this revision were test procedures for fire flow testing and marking of hydrants previously contained in NFPA 291, *Recommended Practice for Fire Flow Testing and Marking of Hydrants*.

The 2003 edition was reformatted to conform to the *Manual of Style for NFPA Technical Committee Documents*, 2000 edition. Hydraulic calculation requirements were rewritten for clarification, and requirements for horizontal standpipes were added. Guidance for hydrants, hose houses, and master streams were deleted as this information was retained by NFPA 13, *Standard for the Installation of Sprinkler Systems*, and NFPA 24, *Standard for the Installation of Private Fire Service Mains and Their Appurtenances*. Similarly, test procedures for fire flow testing and marking of hydrants were returned to NFPA 291, *Recommended Practice for Fire Flow Testing and Marking of Hydrants*, thus "private hydrant" was removed from the title of NFPA 14.

The 2007 edition includes guidance on the use of pressure-regulating devices and roof outlets for standpipe systems. Related information has been extracted from NFPA 13, *Standard for the Installation of Sprinkler Systems*, to assist the user in applications involving combined sprinkler/standpipe systems.

Copyright National Fire Protection Association
Provided by IHS under license with NFPA
No reproduction or networking permitted without license from IHS
Not for Resale

Technical Committee on Standpipes

Maurice M. Pilette, *Chair*
Mechanical Designs Ltd., MA [SE]

Thomas C. Brown, *Secretary*
The RJA Group, Inc., MD [SE]

Gary S. Andress, Liberty Mutual Property, MA [I]
Rep. Property Casualty Insurers Association of America
Richard W. Bonds, Ductile Iron Pipe Research Association, AL [M]
Lisa Marie Bossert, Schirmer Engineering Corporation, NC [I]
Randal G. Brown, Randal Brown & Associates, Ltd., Canada [SE]
Larry Buckett, Vipond Fire Protection, Canada [IM]
Rep. Canadian Automatic Sprinkler Association
Brian G. Conway, Great Lakes Plumbing and Heating Company, IL [IM]
Rep. Illinois Fire Prevention Association
Kenneth C. Hein, Detroit Edison Company, MI [U]
Rep. Edison Electric Institute
Stephen G. Jones, Road Sprinkler Fitters Local Union 669, CO [L]
Rep. United Association of Journeymen and Apprentices of the Plumbing and Pipe Fitting Industry of the United States and Canada
Thomas H. Jutras, EPM, Incorporated, MA [IM]
Rep. New England Association of Fire Protection System Designers
Edwin A. Kotak, Jr., Robert W. Sullivan, Inc., MA [SE]
Richard W. Kozel, Livingston Fire Protection, Inc., MD [IM]
George E. Laverick, Underwriters Laboratories Inc., IL [RT]
Stephen M. Leyton, Protection Design and Consulting, CA [M]
Rep. American Fire Sprinkler Association
Kevin D. Maughan, Tyco Fire & Building Products, RI [M]
J. Brian Nolan, Nolan Fire Pump System Testing, IL [M]
Rich Richardson, Seattle Fire Department, WA [E]
Sam (Sat) Salwan, Environmental Systems Design, Inc., IL [SE]
Jeffrey M. Shapiro, International Code Consultants, TX [SE]
Bruce W. Silk, Boca Raton Fire Department, FL [E]
Richard H. Solomon, Fire Protection Engineering, IL [SE]
Ronald N. Webb, S.A. Comunale Company, Inc., OH [IM]
Rep. National Fire Sprinkler Association
Jim Widmer, Potter Roemer, LLC, GA [M]
Rep. Fire Equipment Manufacturers' Association

Alternates

Paul E. Albinger, Jr., Elkhart Brass Manufacturing Company, Inc., IN [M]
(Alt. to J. Widmer)
Gary L. English, Seattle Fire Department, WA [E]
(Alt. to R. Richardson)
John Galt, Canadian Automatic Sprinkler Association, Canada [IM]
(Alt. to L. Buckett)
Kevin J. Kelly, National Fire Sprinkler Association, NY [IM]
(Alt. to R. N. Webb)
James Lawrence, HFP Corporation, MA [M]
(Alt. to S. M. Leyton)
Eric Lee, Environmental Systems Design, Inc., IL [SE]
(Alt. to S. Salwan)
Terence A. Manning, The RJA Group, Inc., AZ [SE]
(Alt. to T. C. Brown)
Robert C. Nolan, Aquaris Fluid Products, Inc., IL [M]
(Alt. to J. B. Nolan)

Nonvoting

James W. Nolan, James W. Nolan Company, IL
(Member Emeritus)

David R. Hague, NFPA Staff Liaison

This list represents the membership at the time the Committee was balloted on the final text of this edition. Since that time, changes in the membership may have occurred. A key to classifications is found at the back of the document.

NOTE: Membership on a committee shall not in and of itself constitute an endorsement of the Association or any document developed by the committee on which the member serves.

Committee Scope: This Committee shall have primary responsibility for documents on the installation of standpipes and hose systems in buildings and structures.

Copyright National Fire Protection Association
Provided by IHS under license with NFPA
No reproduction or networking permitted without license from IHS
Not for Resale

Contents

Chapter 1 Administration 14– 4
1.1 Scope 14– 4
1.2 Purpose 14– 4
1.3 Retroactivity 14– 4
1.4 Equivalency 14– 4
1.5 Units 14– 4

Chapter 2 Referenced Publications 14– 4
2.1 General 14– 4
2.2 NFPA Publications 14– 5
2.3 Other Publications 14– 5
2.4 References for Extracts in Mandatory Sections 14– 5

Chapter 3 Definitions 14– 5
3.1 General 14– 5
3.2 NFPA Official Definitions 14– 5
3.3 General Definitions 14– 6

Chapter 4 System Components and Hardware 14– 7
4.1 General 14– 7
4.2 Pipe and Tube 14– 7
4.3 Fittings 14– 8
4.4 Joining of Pipe and Fittings 14– 8
4.5 Valves 14–10
4.6 Hose Stations 14–10
4.7 Hose Connections 14–10
4.8 Fire Department Connections 14–10
4.9 Pressure-Regulating Devices 14–11
4.10 Signs 14–11

Chapter 5 System Requirements 14–11
5.1 General 14–11
5.2 Automatic Dry Systems 14–11
5.3 Classes of Standpipe Systems 14–12
5.4 Required Type of System 14–12
5.5 Gauges 14–13
5.6 Waterflow and Supervisory Alarms 14–13

Chapter 6 Installation Requirements 14–13
6.1 Location and Protection of Piping 14–13
6.2 Underground Piping 14–13
6.3 Gate Valves and Check Valves 14–13
6.4 Fire Department Connections 14–14
6.5 Support of Piping 14–15
6.6 Installation of Signs 14–15
6.7 Signs for Water Supply Pumps 14–15
6.8 Hydraulic Design Information Sign 14–15

Chapter 7 Design 14–15
7.1 General 14–15
7.2 Pressure Limitation 14–15
7.3 Locations of Hose Connections 14–15
7.4 Number of Standpipes 14–16
7.5 Interconnection of Standpipes 14–16
7.6 Minimum Sizes for Standpipes and Branchlines 14–16
7.7 System Design and Sizing of Pipe for Delivery of System Demand 14–16
7.8 Minimum and Maximum Pressure Limits 14–16
7.9 Standpipe System Zones 14–17
7.10 Flow Rates 14–17
7.11 Drains and Test Riser 14–18
7.12 Fire Department Connections 14–18

Chapter 8 Plans and Calculations 14–19
8.1 Plans and Specifications 14–19
8.2 Hydraulic Calculations 14–19
8.3 Hydraulic Calculation Procedures 14–19

Chapter 9 Water Supply 14–20
9.1 Required Water Supply 14–20
9.2 Minimum Supply for Class I and Class III Systems 14–21
9.3 Minimum Supply for Class II Systems 14–21

Chapter 10 Water Supply Testing 14–21
10.1 Water Supply Evaluation 14–21
10.2 Procedure 14–21

Chapter 11 System Acceptance 14–21
11.1 General 14–21
11.2 Flushing of Piping 14–21
11.3 Hose Threads 14–21
11.4 Hydrostatic Tests 14–21
11.5 Flow Tests 14–21
11.6 Manual Valve Test 14–27
11.7 Alarm and Supervision Tests 14–27
11.8 Instructions 14–27
11.9 Signs 14–27

Chapter 12 Buildings Under Construction 14–27
12.1 General 14–27
12.2 Fire Department Connections 14–27
12.3 Other System Features 14–27
12.4 Support of Piping 14–27
12.5 Hose Connections 14–27
12.6 Extension of System Piping 14–27
12.7 Temporary Installations 14–27
12.8 Timing of Water Supply Installation 14–27
12.9 Protection of Hose Connections and Fire Department Connections 14–27

Annex A Explanatory Material 14–28

Annex B Informational References 14–35

Index 14–36

Copyright National Fire Protection Association
Provided by IHS under license with NFPA
No reproduction or networking permitted without license from IHS
Not for Resale

NFPA 14

Standard for the

Installation of Standpipe and Hose Systems

2007 Edition

IMPORTANT NOTE: This NFPA document is made available for use subject to important notices and legal disclaimers. These notices and disclaimers appear in all publications containing this document and may be found under the heading "Important Notices and Disclaimers Concerning NFPA Documents." They can also be obtained on request from NFPA or viewed at www.nfpa.org/disclaimers.

NOTICE: An asterisk (*) following the number or letter designating a paragraph indicates that explanatory material on the paragraph can be found in Annex A.

A reference in brackets [ ] following a section or paragraph indicates material that has been extracted from another NFPA document. As an aid to the user, the complete title and edition of the source documents for extracts in mandatory sections of the document are given in Chapter 2 and those for extracts in informational sections are given in Annex B. Editorial changes to extracted material consist of revising references to an appropriate division in this document or the inclusion of the document number with the division number when the reference is to the original document. Requests for interpretations or revisions of extracted text shall be sent to the technical committee responsible for the source document.

Information on referenced publications can be found in Chapter 2 and Annex B.

Chapter 1 Administration

1.1 Scope.

1.1.1 This standard covers the minimum requirements for the installation of standpipes and hose systems.

1.1.2* This standard does not cover requirements for periodic inspection, testing, and maintenance of these systems.

1.2 Purpose.

1.2.1 The purpose of this standard is to provide a reasonable degree of protection for life and property from fire through installation requirements for standpipes and hose systems based on sound engineering principles, test data, and field experience.

1.2.2 Nothing in this standard is intended to restrict new technologies or alternate arrangements, provided that the level of safety prescribed by the standard is not lowered.

1.3 Retroactivity. The provisions of this standard reflect a consensus of what is necessary to provide an acceptable degree of protection from the hazards addressed in this standard at the time the standard was issued.

1.3.1 Unless otherwise specified, the provisions of this standard shall not apply to facilities, equipment, structures, or installations that existed or were approved for construction or installation prior to the effective date of the standard. Where specified, the provisions of this standard shall be retroactive.

1.3.2 In those cases where the authority having jurisdiction determines that the existing situation presents an unacceptable degree of risk, the authority having jurisdiction shall be permitted to apply retroactively any portions of this standard deemed appropriate.

1.3.3 The retroactive requirements of this standard shall be permitted to be modified if their application clearly would be impractical in the judgment of the authority having jurisdiction, and only where it is clearly evident that a reasonable degree of safety is provided.

1.4 Equivalency. Nothing in this standard is intended to prevent the use of systems, methods, or devices of equivalent or superior quality, strength, fire resistance, effectiveness, durability, and safety over those prescribed by this standard.

1.4.1 Technical documentation shall be submitted to the authority having jurisdiction to demonstrate equivalency.

1.4.2 The system, method, or device shall be approved for the intended purpose by the authority having jurisdiction.

1.5 Units.

1.5.1 Metric units of measurement in this standard are in accordance with the modernized metric system known as the International System of Units (SI). Liter and bar units, which are outside of but recognized by SI, are commonly used in international fire protection. These units and their conversion factors are provided in Table 1.5.1.

Table 1.5.1 Metric Units of Measure

Name of Unit	Unit Symbol	Conversion Factor
meter	m	1 ft = 0.3048 m
millimeter	mm	1 in. = 25.4 mm
liter	L	1 gal = 3.785 L
cubic decimeter	dm^3	1 gal = 3.785 dm^3
Pascal	Pa	1 psi = 6894.757 Pa
bar	bar	1 psi = 0.0689 bar
bar	bar	1 bar = 10^5 Pa

Note: For additional conversion and information, see IEEE/ASTM SI 10, *Standard for Use of the International System of Units (SI): The Modern Metric System*, 1997.

1.5.2 If a value for measurement provided in this standard is followed by an equivalent value in other units, the first value stated shall be regarded as the requirement. An equivalent value could be approximate.

1.5.3 Where sizes for pipe, sheet and plate steel, and wire gauges are indicated, they are noted in trade sizes and not by hard conversions.

Chapter 2 Referenced Publications

2.1 General. The documents or portions thereof listed in this chapter are referenced within this standard and shall be considered part of the requirements of this document.

2.2 NFPA Publications. National Fire Protection Association, 1 Batterymarch Park, Quincy, MA 02169-7471.

NFPA 13, *Standard for the Installation of Sprinkler Systems,* 2007 edition.

Copyright National Fire Protection Association
Provided by IHS under license with NFPA
No reproduction or networking permitted without license from IHS
Not for Resale

NFPA 13R, *Standard for the Installation of Sprinkler Systems in Residential Occupancies up to and Including Four Stories in Height,* 2007 edition.

NFPA 20, *Standard for the Installation of Stationary Pumps for Fire Protection,* 2007 edition.

NFPA 22, *Standard for Water Tanks for Private Fire Protection,* 2003 edition.

NFPA 24, *Standard for the Installation of Private Fire Service Mains and Their Appurtenances,* 2007 edition.

NFPA 25, *Standard for the Inspection, Testing, and Maintenance of Water-Based Fire Protection Systems,* 2002 edition.

NFPA 51B, *Standard for Fire Prevention During Welding, Cutting, and Other Hot Work,* 2003 edition.

NFPA 72®, National Fire Alarm Code®, 2007 edition.

NFPA *101®, Life Safety Code®,* 2006 edition.

NFPA 170, *Standard for Fire Safety and Emergency Symbols,* 2006 edition.

NFPA 1963, *Standard for Fire Hose Connections,* 2003 edition.

2.3 Other Publications.

2.3.1 ANSI Publications. American National Standards Institute, Inc., 25 West 43rd Street, 4th Floor, New York, NY 10036.

ANSI B16.1, *Cast Iron Pipe Flanges and Flanged Fittings*, 1998.

ANSI B16.3, *Malleable Iron Threaded Fittings*, 1998.

ANSI B16.4, *Gray Iron Threaded Fittings*, 1998.

ANSI B16.5, *Pipe Flanges and Flanged Fittings*, 2003.

ANSI B16.9, *Factory-Made Wrought Steel Buttwelding Fittings*, 2003.

ANSI B16.11, *Forged Fittings, Socket-Welding and Threaded*, 2001.

ANSI B16.18, *Cast Copper Alloy Solder Joint Pressure Fittings*, 2001.

ANSI B16.22, *Wrought Copper and Copper Alloy Solder Joint Pressure Fittings*, 2001.

ANSI B16.25, *Buttwelding Ends*, 1997.

ANSI B36.10M, *Welded and Seamless Wrought Steel Pipe*, 2000.

ANSI Z97.1, *Safety Glazing Materials Used in Buildings — Safety Performance Specifications and Methods of Test*, 1994.

2.3.2 ASME Publications. American Society of Mechanical Engineers, Three Park Avenue, New York, NY 10016-5990.

ASME B1.20.1, *Pipe Threads, General Purpose (Inch)*, 2001.

2.3.3 ASTM Publications. ASTM International, 100 Barr Harbor Drive, P.O. Box C700, West Conshohocken, PA 19428-2959.

ASTM A 53, *Standard Specification for Pipe, Steel, Black and Hot-Dipped, Zinc-Coated, Welded and Seamless*, 2004.

ASTM A 135, *Standard Specification for Electric-Resistance–Welded Steel Pipe*, 2001.

ASTM A 234, *Standard Specification for Piping Fittings of Wrought Carbon Steel and Alloy Steel for Moderate and High Temperature Service*, 2004.

ASTM A 795, *Standard Specification for Black and Hot-Dipped Zinc-Coated (Galvanized) Welded and Seamless Steel Pipe for Fire Protection Use*, 2004.

ASTM B 75, *Standard Specification for Seamless Copper Tube*, 2002.

ASTM B 88, *Standard Specification for Seamless Copper Water Tube*, 2003.

ASTM B 251, *Standard Specification for General Requirements for Wrought Seamless Copper and Copper-Alloy Tube*, 2002.

ASTM B 828, *Standard Practice for Making Capillary Joints by Soldering of Copper and Copper Alloy Tube and Fittings*, 2002.

2.3.4 AWS Publications. American Welding Society, 550 N.W. LeJeune Road, Miami, FL 33126.

AWS A5.8, *Specification for Filler Metals for Brazing and Braze Welding*, 2004.

AWS B2.1, *Specification for Welding Procedure and Performance Qualification*, 2002.

2.3.5 AWWA Publications. American Water Works Association, 6666 West Quincy Avenue, Denver, CO 80235.

AWWA C104, *Cement-Mortar Lining for Ductile-Iron Pipe and Fittings for Water*, 2003.

AWWA C110, *Ductile-Iron Fittings and Gray-Iron Fittings for Water,* 2003.

AWWA C151, *Ductile-Iron Pipe, Centrifugally Cast, for Water or Other Liquids*, 2002.

2.3.6 IEEE Publications. Institute of Electrical and Electronics Engineers, Three Park Avenue, 17th Floor, New York, NY, 10016-5997.

IEEE/ASTM SI 10, *Standard for Use of the International System of Units (SI): The Modern Metric System*, 1997.

2.3.7 Other Publications.

Merriam-Webster's Collegiate Dictionary, 11th edition, Merriam-Webster, Inc., Springfield, MA, 2003.

2.4 References for Extracts in Mandatory Sections.

NFPA 13, *Standard for the Installation of Sprinkler Systems,* 2007 edition.

NFPA *101®, Life Safety Code®,* 2006 edition.

NFPA 5000®, Building Construction and Safety Code®, 2006 edition.

Chapter 3 Definitions

3.1 General. The definitions contained in this chapter shall apply to the terms used in this standard. Where terms are not defined in this chapter or within another chapter, they shall be defined using their ordinarily accepted meanings within the context in which they are used. *Merriam-Webster's Collegiate Dictionary,* 11th edition, shall be the source for the ordinarily accepted meaning.

3.2 NFPA Official Definitions.

3.2.1* Approved. Acceptable to the authority having jurisdiction.

3.2.2* Authority Having Jurisdiction (AHJ). An organization, office, or individual responsible for enforcing the requirements of a code or standard, or for approving equipment, materials, an installation, or a procedure.

3.2.3* Listed. Equipment, materials, or services included in a list published by an organization that is acceptable to the authority having jurisdiction and concerned with evaluation of products or services, that maintains periodic inspection of production of listed equipment or materials or periodic evaluation of services,

Copyright National Fire Protection Association
Provided by IHS under license with NFPA
No reproduction or networking permitted without license from IHS
Not for Resale

and whose listing states that either the equipment, material, or service meets appropriate designated standards or has been tested and found suitable for a specified purpose.

3.2.4 Shall. Indicates a mandatory requirement.

3.2.5 Should. Indicates a recommendation or that which is advised but not required.

3.2.6 Standard. A document, the main text of which contains only mandatory provisions using the word "shall" to indicate requirements and which is in a form generally suitable for mandatory reference by another standard or code or for adoption into law. Nonmandatory provisions shall be located in an appendix or annex, footnote, or fine-print note and are not to be considered a part of the requirements of a standard.

3.3 General Definitions.

3.3.1 Branch Line. A piping system, generally in a horizontal plane, connecting not more than one hose connection with a standpipe.

3.3.2 Connection.

3.3.2.1 ***Fire Department Connection.***

3.3.2.1.1 ***Fire Department Connection.*** For automatic standpipe systems, a connection through which the fire department can pump supplemental water into the sprinkler system, standpipe, or other system furnishing water for fire extinguishment to supplement existing water supplies.

3.3.2.1.2 ***Fire Department Connection.*** For manual standpipe systems, a connection through which the fire department can pump the primary water supply to a manual standpipe system at the required system demand.

3.3.2.2 ***Hose Connection.*** A combination of equipment provided for connection of a hose to the standpipe system that includes a hose valve with a threaded outlet.

3.3.3 Exit.

3.3.3.1 ***Exit Passageway.*** Hallways, corridors, passages, or tunnels used as exit components and separated from other parts of the building in accordance with NFPA *101, Life Safety Code*.

3.3.3.2 ***Horizontal Exit.*** A way of passage from one building to an area of refuge in another building on approximately the same level, or a way of passage through or around a fire barrier to an area of refuge on approximately the same level in the same building that affords safety from fire and smoke originating from the area of incidence and areas communicating therewith. [***101,*** 2006]

3.3.4 Feed Main. The portion of a standpipe system that supplies water to one or more standpipes.

3.3.5 High-Rise Building. A building where the floor of an occupiable story is greater than 75 ft (23 m) above the lowest level of fire department vehicle access. [***5000,*** 2006]

3.3.6 Hose Station. A combination of a hose rack, hose nozzle, hose, and hose connection.

3.3.7 Pressure.

3.3.7.1 ***Nozzle Pressure.*** Pressure required at the inlet of a nozzle to produce the desired water discharge characteristics.

3.3.7.2 ***Residual Pressure.*** For standpipe systems, pressure acting on a point in the system with a flow being delivered.

3.3.7.3 ***Static Pressure.*** For standpipe systems, pressure acting on a point in the system with no flow from the system.

3.3.8* Pressure-Regulating Device. A device designed for the purpose of reducing, regulating, controlling, or restricting water pressure.

3.3.9 Pressure-Restricting Device. A valve or device designed for the purpose of reducing the downstream water pressure under flowing (residual) conditions only.

3.3.10 Rated Capacity. The flow available from a device, at the designated residual pressure either measured or calculated.

3.3.11 Standpipe. The vertical portion of the system piping that delivers the water supply for hose connections, and sprinklers on combined systems, vertically from floor to floor. The term *standpipe* can also refer to the horizontal portion of the system piping that delivers the water supply for two or more hose connections, and sprinklers on combined systems, on a single level.

3.3.12* Standpipe System. An arrangement of piping, valves, hose connections, and allied equipment installed in a building or structure, with the hose connections located in such a manner that water can be discharged in streams or spray patterns through attached hose and nozzles, for the purpose of extinguishing a fire, thereby protecting a building or structure and its contents in addition to protecting the occupants.

3.3.12.1 ***Automatic Standpipe System.*** A standpipe system that is attached to a water supply capable of supplying the system demand at all times and that requires no action other than opening a hose valve to provide water at hose connections.

3.3.12.2 ***Combined System.*** A standpipe system having piping that supplies both hose connections and automatic sprinklers.

3.3.12.3 ***Dry Standpipe System.***

3.3.12.3.1 ***Automatic Dry Standpipe System.*** A standpipe system with a permanently attached water supply that is designed to have piping contain water only when the system is being utilized.

3.3.12.3.2 ***Manual Dry Standpipe System.*** A standpipe system with no permanently attached water supply that is designed to have piping contain water only when the system is being utilized through the fire department connection.

3.3.12.4 ***Manual Standpipe System.*** A standpipe system that relies exclusively on the fire department connection to supply the system demand.

3.3.12.5 ***Semiautomatic Standpipe System.*** A standpipe system that is attached to a water supply capable of supplying the system demand at all times and that requires activation of a control device to provide water at hose connections.

3.3.12.6 ***Wet Standpipe System.*** A standpipe system having piping containing water at all times.

3.3.13 Standpipe System Zone. A vertical subdivision of a standpipe system limited or determined by the pressure limitations of the system components.

3.3.14 System Demand. The flow rate and residual pressure required from a water supply, measured at the point of connection of a water supply to a standpipe system, to deliver the total waterflow rate and the minimum residual pressures required for

Copyright National Fire Protection Association
Provided by IHS under license with NFPA
No reproduction or networking permitted without license from IHS
Not for Resale

a standpipe system at the hydraulically most remote hose, and the minimum waterflow rate for sprinkler connections on combined systems.

3.3.15* System Type.

3.3.15.1 ***Class I System.*** A system that provides 2½ in. (65 mm) hose connections to supply water for use by fire departments and those trained in handling heavy fire streams.

3.3.15.2 ***Class II System.*** A system that provides 1½ in. (40 mm) hose stations to supply water for use primarily by trained personnel or by the fire department during initial response.

3.3.15.3 ***Class III System.*** A system that provides 1½ in. (40 mm) hose stations to supply water for use by trained personnel and 2½ in. (65 mm) hose connections to supply a larger volume of water for use by fire departments and those trained in handling heavy fire streams.

3.3.16 Valve.

3.3.16.1 ***Control Valve.*** A valve controlling flow to water-based fire protection systems. Control valves do not include hose valves, inspector's test valves, drain valves, trim valves for dry pipe, preaction and deluge valves, check valves, or relief valves.

3.3.16.2 ***Hose Valve.*** The valve to an individual hose connection.

3.3.16.3 ***Pressure Control Valve.*** A pilot-operated pressure-reducing valve designed for the purpose of reducing the downstream water pressure to a specific value under both flowing (residual) and nonflowing (static) conditions.

3.3.16.4* ***Pressure-Reducing Valve.*** A valve designed for the purpose of reducing the downstream water pressure under both flowing (residual) and nonflowing (static) conditions.

Chapter 4 System Components and Hardware

4.1* General.

4.1.1 Standpipe system components and hardware shall be in accordance with this chapter.

4.1.2 All devices and materials used in standpipe systems shall be listed, except as permitted in 4.1.3.

4.1.3 Components that do not affect system performance such as drain piping, drain valves, and signs shall not be required to be listed.

4.2 Pipe and Tube.

4.2.1 Pipe or tube used in standpipe systems shall meet or exceed one of the standards in Table 4.2.1 or shall be in accordance with 4.2.2 through 4.2.6.

4.2.2 Where ductile iron pipe is installed in accordance with Table 4.2.1, it shall be lined in accordance with AWWA C104, *Cement-Mortar Lining for Ductile-Iron Pipe and Fittings for Water.*

4.2.3 Where steel pipe specified in Table 4.2.1 is used and joined by welding as specified in Section 4.4 or by roll-grooved pipe and fittings as specified in Section 4.4, the minimum nominal wall thickness for pressures up to 300 psi (20.7 bar) shall be in accordance with Schedule 10 for pipe sizes up to 5 in. (127 mm), 0.134 in. (3.40 mm) for 6 in. (150 mm) pipe, and 0.188 in. (4.78 mm) for 8 in. and 10 in. (203 mm and 254 mm) pipe.

4.2.3.1 Pressure limitations and wall thickness for steel pipe listed in accordance with 4.2.6 shall be in accordance with the listing requirements.

4.2.4 Where steel pipe specified in Table 4.2.1 is joined by threaded fittings as specified in Section 4.4 or by fittings used with pipe having cut grooves, the minimum wall thickness shall be in accordance with Schedule 30 [sizes 8 in. (203 mm) and larger] or Schedule 40 [sizes less than 8 in. (203 mm)] pipe for pressures up to 300 psi (20.7 bar).

4.2.4.1 Pressure limitations and wall thicknesses for steel pipe specially listed in accordance with 4.2.6 shall be in accordance with the listing requirements.

4.2.5 Copper tube as specified in the standards referenced in Table 4.2.1 shall have a wall thickness of Type K, L, or M where used in standpipe systems.

4.2.6 Other types of pipe or tube investigated for use in standpipe installations and listed for this service, including, but not limited to, steel differing from that provided in Table 4.2.1, shall be permitted where installed in accordance with their listing limitations, including installation instructions.

4.2.6.1 Pipe or tube shall not be listed for portions of an occupancy classification.

Table 4.2.1 Pipe or Tube Materials and Dimensions

Materials and Dimensions (Specifications)	Standard
Ferrous Piping	
Ductile-Iron Pipe, Centrifugally Cast, for Water or Other Liquids	AWWA C151
Electric-Resistance-Welded Steel Pipe	
Standard Specification for Electric-Resistance–Welded Steel Pipe	ASTM A 135
Welded and Seamless Steel	
Standard Specification for Black and Hot-Dipped Zinc-Coated (Galvanized) Welded and Seamless Steel Pipe for Fire Protection Use	ASTM A 795
Welded and Seamless Steel Pipe	
Standard Specification for Pipe, Steel, Black and Hot-Dipped, Zinc-Coated, Welded and Seamless	ASTM A 53
Welded and Seamless Wrought Steel Pipe	ANSI B36.10M
Copper Tube (Drawn, Seamless)	
Standard Specification for Seamless Copper Tube	ASTM B 75
Standard Specification for Seamless Copper Water Tube	ASTM B 88
Standard Specification for General Requirements for Wrought Seamless Copper and Copper-Alloy Tube	ASTM B 251
Brazing Filler Metal (Classifications BCuP-3 or BCuP-4)	
Specification for Filler Metals for Brazing and Braze Welding	AWS A5.8

Copyright National Fire Protection Association
Provided by IHS under license with NFPA
No reproduction or networking permitted without license from IHS
Not for Resale

4.2.7 Bending of Pipe and Tube.

4.2.7.1 Bending of Schedule 40 steel pipe and Types K and L copper tube shall be permitted where bends are made with no kinks, ripples, distortions, reductions in diameter, or any noticeable deviations from a round shape.

4.2.7.2 The minimum radius of a bend shall be six pipe diameters for pipe sizes 2 in. (50 mm) and smaller, and five pipe diameters for pipe sizes 2½ in. (65 mm) and larger.

4.3 Fittings.

4.3.1 Fittings used in standpipe systems shall meet or exceed the standards in Table 4.3.1 or shall be in accordance with 4.3.2.

Table 4.3.1 Fittings Materials and Dimensions

Materials and Dimensions	Standard
Cast-Iron	
Gray Iron Threaded Fittings	ANSI B16.4
Cast Iron Pipe Flanges and Flanged Fittings	ANSI B16.1
Malleable-Iron	
Malleable Iron Threaded Fittings	ANSI B16.3
Ductile-Iron	
Ductile-Iron and Gray-Iron Fittings for Water	AWWA C110
Steel	
Factory-Made Wrought Steel Buttwelding Fittings	ANSI B16.9
Buttwelding Ends	ANSI B16.25
Standard Specification for Piping Fittings of Wrought Carbon Steel and Alloy Steel for Moderate and High Temperature Service	ASTM A 234
Pipe Flanges and Flanged Fittings	ANSI B16.5
Forged Fittings, Socket-Welding and Threaded	ANSI B16.11
Copper	
Wrought Copper and Copper Alloy Solder Joint Pressure Fittings	ANSI B16.22
Cast Copper Alloy Solder Joint Pressure Fittings	ANSI B16.18

4.3.2 Other types of fittings investigated for suitability in standpipe installations and listed for this service, including, but not limited to, steel differing from that provided in Table 4.3.1, shall be permitted where installed in accordance with their listing limitations, including installation instructions.

4.3.3 Fittings shall be extra-heavy pattern where pressures exceed 175 psi (12.1 bar).

4.3.3.1 Standard weight pattern cast-iron fittings 2 in. (50 mm) in size and smaller shall be permitted where pressures do not exceed 300 psi (20.7 bar).

4.3.3.2 Standard weight pattern malleable-iron fittings 150 mm (6 in.) in size and smaller shall be permitted where pressures do not exceed 300 psi (20.7 bar).

4.3.3.3 Fittings shall be permitted for system pressures up to the limits specified in their listings.

4.3.4 Screwed unions shall not be used on pipe larger than 2 in. (50 mm).

4.3.4.1 Couplings and unions of other than the screwed type shall be of the types listed specifically for use in standpipe systems.

4.3.5 A one-piece reducing fitting shall be used wherever a change is made in the size of the pipe.

4.3.5.1 Hexagonal or face bushings shall be permitted for reducing the size of openings of fittings where standard fittings of the required size are not available.

4.4 Joining of Pipe and Fittings.

4.4.1 Threaded Pipe and Fittings.

4.4.1.1 All threaded pipe and fittings shall have threads cut to ASME B1.20.1, *Pipe Threads, General Purpose (Inch).* [**13:**6.5.1.1]

4.4.1.2* Steel pipe with wall thicknesses less than Schedule 30 [in sizes 8 in. (200 mm) and larger] or Schedule 40 [in sizes less than 8 in. (200 mm)] shall only be permitted to be joined by threaded fittings where the threaded assembly is investigated for suitability in automatic sprinkler installations and listed for this service. [**13:**6.5.1.2]

4.4.1.3 Joint compound or tape shall be applied only to male threads. [**13:**6.5.1.3]

4.4.2 Welded Pipe and Fittings.

4.4.2.1 General.

4.4.2.1.1 Welding shall be permitted as a means of joining sprinkler piping in accordance with 4.4.2.2 through 4.4.2.6. [**13:**6.5.2.1.1]

4.4.2.2* Fabrication.

4.4.2.2.1 When welding sprinkler pipe, the pipe shall be shop-welded unless the requirements of 4.4.2.2 or 4.4.2.6 are met. [**13:**6.5.2.2.1]

4.4.2.2.2 Where the design specifications require any part of the piping system to be welded in place, welding of sprinkler piping shall be permitted where the welding process is performed in accordance with NFPA 51B, *Standard for Fire Prevention During Welding, Cutting, and Other Hot Work*, and the mechanical fittings required by 8.1.6.3 and 8.15.21 of NFPA 13 are provided. [**13:**6.5.2.2.2]

4.4.2.2.3 Tabs for longitudinal earthquake bracing shall be permitted to be welded to in-place piping where the welding process is performed in accordance with NFPA 51B, *Standard for Fire Prevention During Welding, Cutting, and Other Hot Work.* [**13:**6.5.2.2.3]

4.4.2.2.4 Welding shall not be performed where there is impingement of rain, snow, sleet, or high wind on the weld area of the pipe product. [**13:**6.5.2.2.4]

4.4.2.2.5 Torch cutting and welding shall not be permitted as a means of modifying or repairing sprinkler systems. [**13:**6.5.2.2.5]

4.4.2.3 Fittings.

4.4.2.3.1* Welded fittings used to join pipe shall be listed fabricated fittings or manufactured in accordance with Table 4.3.1. [**13:**6.5.2.3.1]

4.4.2.3.2 Fittings referenced in 4.4.2.3.1 shall be joined in conformance with a qualified welding procedure as set forth in this section and shall be an acceptable product under this standard, provided that materials and wall thickness are compatible with other sections of this standard. [**13:**6.5.2.3.2]

Copyright National Fire Protection Association
Provided by IHS under license with NFPA
No reproduction or networking permitted without license from IHS
Not for Resale

4.4.2.3.3 Fittings shall not be required where pipe ends are buttwelded in accordance with the requirements of 4.4.2.4.2. [**13:**6.5.2.3.3]

4.4.2.3.4 When the pipe size in a run of piping is reduced, a reducing fitting designed for that purpose shall be used in accordance with the requirements of 4.4.2.3.1. [**13:**6.5.2.3.4]

4.4.2.4 Welding Requirements.

4.4.2.4.1* Welds between pipe and welding outlet fittings shall be permitted to be attached by full penetration welds, partial penetration groove welds, or fillet welds. The minimum throat thickness shall be not less than the thickness of the pipe, the thickness of the welding fitting, or 3⁄16 in. (4.8 mm), whichever is least. [**13:**6.5.2.4.1]

4.4.2.4.2* Circumferential butt joints shall be cut, beveled, and fit so that full penetration is achievable. Full penetration welding shall not be required. [**13:**6.5.2.4.2]

4.4.2.4.3 Where slip-on flanges are welded to pipe with a single fillet weld, the weld shall be on the hub side of the flange and the minimum throat weld thickness shall not be less than 1.25 times the pipe wall thickness or the hub thickness, whichever is less. [**13:**6.5.2.4.3]

4.4.2.4.4 Face welds on the internal face of the flange shall be permitted as a water seal in addition to the hub weld required in 4.4.2.4.3. [**13:**6.5.2.4.4]

4.4.2.4.5 Tabs for longitudinal earthquake bracing shall have minimum throat weld thickness not less than 1.25 times the pipe wall thickness and welded on both sides of the longest dimension. [**13:**6.5.2.4.5]

4.4.2.4.6 When welding is performed, the following shall apply:

(1) Holes in piping for outlets shall be cut to the full inside diameter of fittings prior to welding in place of the fittings.
(2) Discs shall be retrieved.
(3) Openings cut into piping shall be smooth bore, and all internal slag and welding residue shall be removed.
(4) Fittings shall not penetrate the internal diameter of the piping.
(5) Steel plates shall not be welded to the ends of piping or fittings.
(6) Fittings shall not be modified.
(7) Nuts, clips, eye rods, angle brackets, or other fasteners shall not be welded to pipe or fittings, except as permitted in 4.4.2.2.3 and 4.4.2.4.5.
(8) Completed welds shall be free from cracks, incomplete fusion, surface porosity greater than 1⁄16 in. (1.6 mm) diameter, and undercut deeper than 25 percent of the wall thickness or 1⁄32 in. (0.8 mm), whichever is less.
(9) Completed circumferential butt weld reinforcement shall not exceed 3⁄32 in. (2.4 mm). [**13:**6.5.2.4.6]

4.4.2.5 Qualifications.

4.4.2.5.1 A welding procedure shall be prepared and qualified by the contractor or fabricator before any welding is done. [**13:**6.5.2.5.1]

4.4.2.5.2 Qualification of the welding procedure to be used and the performance of all welders and welding operators shall be required and shall meet or exceed the requirements of AWS B2.1, *Specification for Welding Procedure and Performance Qualification*, ASME *Boiler and Pressure Vessel Code*, Section IX, *Welding and Brazing Qualifications*, or other applicable qualification standard as required by the authority having jurisdiction, except as permitted by 4.4.2.5.3. [**13:**6.5.2.5.2]

4.4.2.5.3 Successful procedure qualification of complete joint penetration groove welds shall qualify partial joint penetration (groove/fillet) welds and fillet welds in accordance with the provisions of this standard. [**13:**6.5.2.5.3]

4.4.2.5.4 Welding procedures qualified under standards recognized by previous editions of this standard shall be permitted to be continued in use. [**13:**6.5.2.5.4]

4.4.2.5.5 Contractors or fabricators shall be responsible for all welding they produce. [**13:**6.5.2.5.5]

4.4.2.5.6 Each contractor or fabricator shall have available to the authority having jurisdiction an established written quality assurance procedure ensuring compliance with the requirements of 4.4.2.4. [**13:**6.5.2.5.6]

4.4.2.6 Records.

4.4.2.6.1 Welders or welding machine operators shall, upon completion of each welded pipe, place their identifiable mark or label onto each piece adjacent to a weld. [**13:**6.5.2.6.1]

4.4.2.6.2 Contractors or fabricators shall maintain certified records, which shall be available to the authority having jurisdiction, of the procedures used and the welders or welding machine operators employed by them, along with their welding identification. [**13:**6.5.2.6.2]

4.4.2.6.3 Records shall show the date and the results of procedure and performance qualifications. [**13:**6.5.2.6.3]

4.4.3 Groove Joining Methods.

4.4.3.1 Pipe joined with grooved fittings shall be joined by a listed combination of fittings, gaskets, and grooves. [**13:**6.5.3.1]

4.4.3.2 Grooves cut or rolled on pipe shall be dimensionally compatible with the fittings. [**13:**6.5.3.2]

4.4.3.3 Grooved fittings, including gaskets used on dry-pipe, preaction, and deluge systems, shall be listed for dry pipe service. [**13:**6.5.3.3]

4.4.4* Brazed and Soldered Joints.

4.4.4.1 Solder joints, where permitted, shall be fabricated in accordance with the methods and procedures listed in ASTM B 828, *Standard Practice for Making Capillary Joints by Soldering of Copper and Copper Alloy Tube and Fittings*. [**13:**6.5.4.1]

4.4.4.2 Unless the requirements of 4.4.4.3 or 4.4.4.4 are met, joints for the connection of copper tube shall be brazed. [**13:**6.5.4.2]

4.4.4.3 Solder joints shall be permitted for exposed wet pipe systems in light hazard occupancies where the temperature classification of the installed sprinklers is of the ordinary- or intermediate-temperature classification. [**13:**6.5.4.3]

4.4.4.4 Solder joints shall be permitted for wet pipe systems in light hazard and ordinary hazard (Group 1) occupancies where the piping is concealed, irrespective of sprinkler temperature ratings. [**13:**6.5.4.4]

4.4.4.5* Soldering fluxes shall be in accordance with Table 6.3.1.1 of NFPA 13. [**13:**6.5.4.5]

Copyright National Fire Protection Association
Provided by IHS under license with NFPA
No reproduction or networking permitted without license from IHS
Not for Resale

4.4.4.6 Brazing fluxes, if used, shall not be of a highly corrosive type. [**13:**6.5.4.6]

4.4.5 Other Joining Methods.

4.4.5.1 Other joining methods investigated for suitability in automatic sprinkler installations and listed for this service shall be permitted where installed in accordance with their listing limitations, including installation instructions. [**13:**6.5.5.1]

4.4.5.2 Outlet Fittings. Rubber-gasketed outlet fittings that are used on sprinkler systems shall meet the following requirements:

(1) Be installed in accordance with the listing and manufacturer's installation instructions
(2) Have all disks retrieved
(3) Have smooth bores cut into the pipe, with all cutting residue removed
(4) Not be modified [**13:**6.5.5.2]

4.4.6 End Treatment.

4.4.6.1 After cutting, pipe ends shall have burrs and fins removed. [**13:**6.5.6.1]

4.4.6.2 Pipe used with listed fittings and its end treatment shall be in accordance with the fitting manufacturer's installation instructions and the fitting's listing. [**13:**6.5.6.2]

4.5 Valves.

4.5.1 All valves controlling connections to water supplies and standpipes shall be listed indicating valves.

4.5.1.1 A listed underground gate valve equipped with a listed indicator post shall be permitted.

4.5.1.2 A listed water control valve assembly with a position indicator connected to a remote supervisory station shall be permitted.

4.5.1.3 A nonindicating valve, such as an underground gate valve with approved roadway box complete with T-wrench, acceptable to the authority having jurisdiction, shall be permitted.

4.5.2 Such valves shall not close in less than 5 seconds when operated at maximum possible speed from the fully open position.

4.6 Hose Stations.

4.6.1 Closets and Cabinets.

4.6.1.1 Closets and cabinets used to contain fire hose shall be of a size to allow the installation of the necessary equipment at hose stations and designed so they do not interfere with the prompt use of the hose connection, the hose, and other equipment at the time of fire.

4.6.1.1.1 Within the cabinet, the hose connections shall be located so that there is at least 1 in. (25.4 mm) between any part of the cabinet and the handle of the valve when the valve is in any position ranging from fully open to fully closed.

4.6.1.1.2 The cabinet shall be used for fire equipment only, and each cabinet shall be conspicuously identified.

4.6.1.2 Where a "break glass"-type protective cover for a latching device is provided, the device provided to break the glass panel shall be attached in the immediate area of the break glass panel and shall be arranged so that the device cannot be used to break other glass panels in the cabinet door.

4.6.1.2.1 All glazing shall be either tempered safety glass or plastic glazing in accordance with ANSI Z97.1, *Safety Glazing Materials Used in Buildings—Safety Performance Specifications and Methods of Test.*

4.6.1.3 Where a fire-resistive assembly is penetrated by a cabinet, the fire resistance of the assembly shall be maintained as required by the local building code.

4.6.1.4 Hose cabinets shall be marked to indicate the contents.

4.6.2 Hose.

4.6.2.1* Each hose connection provided for use by trained personnel (Class II and Class III systems) shall be equipped with not more than 100 ft (30.5 m) of listed, 1½ in. (40 mm), lined, collapsible or noncollapsible fire hose attached and ready for use.

4.6.2.2 Where hose less than 1½ in. (40 mm) is used for 1½ in. (40 mm) hose stations in accordance with 5.3.2 and 5.3.3, listed noncollapsible hose shall be used.

4.6.3 Hose Racks.

4.6.3.1 Each 1½ in. (40 mm) hose station provided with 1½ in. (40 mm) hose shall be equipped with a listed rack or other approved storage facility.

4.6.3.2 Each 1½ in. (40 mm) hose station provided with hose less than 1½ in. (40 mm) in accordance with 5.3.2 and 5.3.3 shall be equipped with a listed continuous flow reel.

4.6.4 Nozzles. Nozzles provided for Class II service shall be listed.

4.6.5* Label. Each rack or storage facility for 1½ in. (40 mm) or smaller hose shall be provided with a label that includes the wording "fire hose for use by trained personnel" and operating instructions.

4.7 Hose Connections.

4.7.1 Hose valves shall be listed.

4.7.2 Hose connections shall have external National Hose Standard (NHS) threads, for the valve size specified, in accordance with NFPA 1963, *Standard for Fire Hose Connections.*

4.7.3 Hose connections shall be equipped with caps to protect the hose threads.

4.7.4 Where local fire department hose threads do not conform to NFPA 1963, *Standard for Fire Hose Connections*, the authority having jurisdiction shall designate the hose threads that shall be used.

4.8 Fire Department Connections. *(See Figure A.6.4.)*

4.8.1 Fire department connections shall be listed for a working pressure equal to or greater than the pressure requirement of the system demand.

4.8.2 Each fire department connection shall have at least two 2½ in. (65 mm) internal threaded swivel fittings having NHS threads, as specified in NFPA 1963, *Standard for Fire Hose Connections. (See Sections 7.7 and 7.12 for design requirements.)*

4.8.2.1 Fire department connections shall be equipped with caps to protect the system from the entry of debris.

4.8.2.2 Where the local fire department uses fittings that differ from those specified, fittings compatible with local fire department equipment shall be used and their minimum size shall be 2½ in. (65 mm).

--`,,```,,,,````-`-`,,`,,`,`,,`---
Copyright National Fire Protection Association
Provided by IHS under license with NFPA
No reproduction or networking permitted without license from IHS
Not for Resale

4.9 Pressure-Regulating Devices. Pressure-regulating devices shall be listed.

4.10 Signs. Signs shall be permanently marked and shall be constructed of weather-resistant metal or rigid plastic materials.

Chapter 5 System Requirements

5.1 General.

5.1.1 The number and arrangement of standpipe equipment necessary for protection shall be governed by local conditions such as the occupancy, character, and construction of the building and its accessibility.

5.1.2* The authority having jurisdiction shall be consulted regarding the required type of system, class of system, and special requirements.

5.1.3 The spacing and location of standpipes and hose connections shall be in accordance with Chapter 7.

5.1.4 Standpipe and hose systems not required by the authority having jurisdiction and not meeting the requirements of this standard shall be marked with a sign that reads "FOR FIRE BRIGADE USE ONLY."

5.2 Automatic Dry Systems.

5.2.1* Automatic Dry.

5.2.1.1 Water Supply. The water supply for an automatic dry standpipe system shall be capable of supplying the system demand.

5.2.1.2 Pressure Gauges. Listed pressure gauges conforming with Section 5.5 shall be connected as follows:

(1) On the water side and air side of the dry pipe valve
(2) At the air pump supplying the air receiver where one is provided
(3) At the air receiver where one is provided
(4) In each independent pipe from air supply to dry pipe system
(5) At exhausters and accelerators [**13:**7.2.1]

5.2.1.3 Size of Systems Volume Limitations.

5.2.1.3.1* Not more than 750 gal (2839 L) system capacity shall be controlled by one dry pipe valve. [**13:**7.2.3.1]

5.2.1.3.2 Piping volume shall be permitted to exceed the requirements of 5.2.1.3.1 where the system design is such that water is delivered to the system at the most remote hose connection in not more than 3 minutes, starting at the normal air pressure on the system and at the time of fully opened hose connection.

5.2.1.4* Location and Protection of Dry Pipe Valve. [**13:**7.2.5]

5.2.1.4.1* General. The dry pipe valve and supply pipe shall be protected against freezing and mechanical injury. [**13:**7.2.5.1]

5.2.1.4.2 Valve Rooms. [**13:**7.2.5.2]

5.2.1.4.2.1 Valve rooms shall be lighted and heated. [**13:**7.2.5.2.1]

5.2.1.4.2.2 The source of heat shall be of a permanently installed type. [**13:**7.2.5.2.2]

5.2.1.4.2.3 Heat tape shall not be used in lieu of heated valve enclosures to protect the dry pipe valve and supply pipe against freezing. [**13:**7.2.5.2.3]

5.2.1.4.3 Low Differential Dry Pipe Valve. Protection against accumulation of water above the clapper shall be provided for a low differential dry pipe valve. [**13:**7.2.5.4.2]

5.2.1.4.4 High Water Level Device. An automatic high water level signaling device or an automatic drain device shall be permitted. [**13:**7.2.5.4.3]

5.2.1.5 Air Pressure and Supply. [**13:**7.2.6]

5.2.1.5.1 Maintenance of Air Pressure. Air or nitrogen pressure shall be maintained on dry pipe systems throughout the year. [**13:**7.2.6.1]

5.2.1.5.2* Air Supply. [**13:**7.2.6.2]

5.2.1.5.2.1 The compressed air supply shall be from a source available at all times. [**13:**7.2.6.2.1]

5.2.1.5.2.2 The air supply shall have a capacity capable of restoring normal air pressure in the system within 30 minutes. [**13:**7.2.6.2.2]

5.2.1.5.3 Air Supply Connection. [**13:**7.2.6.3]

5.2.1.5.3.1 Connection pipe from the air supply shall not be less than ½ in. (15 mm) in diameter and shall enter the system above the priming water level of the dry pipe valve. [**13:**7.2.6.3.1]

5.2.1.5.3.2 A check valve shall be installed in this air line, and a shutoff valve of the renewable disc type shall be installed on the supply side of this check valve and shall remain closed unless filling the system. [**13:**7.2.6.3.2]

5.2.1.5.4 Relief Valve. An approved relief valve shall be provided between the air supply and the shutoff valve and shall be set to relieve pressure no less than 10 psi (0.7 bar) in excess of system air pressure provided in 5.2.1.5.10 and shall not exceed the manufacturer's limitations. [**13:**7.2.6.4]

5.2.1.5.5 Automatic Air Maintenance. Unless the requirements of 5.2.1.5.6 are met, where the air supply to a dry pipe system is maintained automatically, the air supply shall be from a dependable plant system or an air compressor with an air receiver, and shall utilize an air maintenance device specifically listed for such service and capable of controlling the required air pressure on, and maximum airflow to, the dry system. [**13:**7.2.6.5.1]

5.2.1.5.6 Where the air compressor supplying the dry pipe system has a capacity less than 5.5 ft^3/min (156 L/min) at 10 psig (0.7 bar), no air receiver or air maintenance device shall be required. [**13:**7.2.6.5.2]

5.2.1.5.7 The automatic air supply to more than one dry pipe system shall be connected to enable individual maintenance of air pressure in each system. [**13:**7.2.6.5.3]

5.2.1.5.8 A check valve or other positive backflow prevention device shall be installed in the air supply to each system to prevent airflow or waterflow from one system to another. [**13:**7.2.6.5.4]

5.2.1.5.9 System Air Pressure. [**13:**7.2.6.6]

5.2.1.5.10 The system air pressure shall be maintained in accordance with the instruction sheet furnished with the dry pipe valve, or shall be 20 psi (1.4 bar) in excess of the calculated trip pressure of the dry pipe valve, based on the highest normal water pressure of the system supply. [**13:**7.2.6.6.1]

--`,,```,,,,````-`-`,,`,,`,`,,`---
Copyright National Fire Protection Association
Provided by IHS under license with NFPA
No reproduction or networking permitted without license from IHS
Not for Resale

5.2.1.5.11 The permitted rate of air leakage shall be as specified in 5.2.1.5.12. [**13:**7.2.6.6.2]

5.2.1.5.12 In addition to the standard hydrostatic test, an air pressure leakage test at 40 psi (2.8 bar) shall be conducted for 24 hours. Any leakage that results in a loss of pressure in excess of 1½ psi (0.1 bar) for the 24 hours shall be corrected. [**13:**24.2.2.1]

5.2.1.5.13 Nitrogen. Where used, nitrogen shall be introduced through a pressure regulator set to maintain system pressure in accordance with 5.2.1.5.5. [**13:**7.2.6.7]

5.2.2 Automatic Wet.

5.2.2.1 System Demand. An automatic wet standpipe system shall be a wet standpipe system that has a water supply that is capable of supplying the system demand automatically.

5.2.2.2 Auxiliary Systems. A wet standpipe system shall be permitted to supply an auxiliary dry standpipe system, provided the water supply is capable of supplying the system demand. [**13:**7.1.3]

5.2.3 Semiautomatic Dry. A semiautomatic dry standpipe system shall be a dry standpipe system that is arranged through the use of a device, such as a deluge valve, to admit water into the system piping upon activation of a remote control device located at a hose connection.

5.2.3.1 A listed remote control activation device shall be provided at each hose connection within 3 ft (1 m) and shall be visible and identified as to its intended use and in accordance with the manufacturer's specifications.

5.2.3.1.1 The remote control activation device shall be permitted to be secured in an approved manner to prevent unauthorized system activation.

5.2.3.1.2 The remote control activation system shall be installed in accordance with *NFPA 72*, *National Fire Alarm Code*.

5.2.3.1.3* The remote control activation circuits shall be protected from mechanical damage.

5.2.3.2 The water supply for a semiautomatic dry standpipe system shall be capable of supplying the system demand.

5.2.3.3 All remote control activation devices of the semiautomatic dry standpipe system shall be compatible and listed for the intended use.

5.2.3.4* The automatic water control valve shall be provided with hydraulic means or mechanical manual means for operation that is independent of the remote control activation device.

5.2.3.5 Pressure Gauges. Listed pressure gauges conforming with Section 5.5 shall be installed as follows:

(1) Above and below preaction valve and below deluge valve
(2) On air supply to preaction and deluge valves [**13:**7.3.1.3]

5.2.3.6 Location and Protection of System Water Control Valves. [**13:**7.3.1.8]

5.2.3.6.1 System water control valves and supply pipes shall be protected against freezing and mechanical injury. [**13:**7.3.1.8.1]

5.2.3.6.2 Valve Rooms. [**13:**7.3.1.8.2]

5.2.3.6.2.1 Valve rooms shall be lighted and heated. [**13:**7.3.1.8.2.1]

5.2.3.6.2.2 The source of heat shall be of a permanently installed type. [**13:**7.3.1.8.2.2]

5.2.3.6.2.3 Heat tape shall not be used in lieu of heated valve enclosure rooms to protect preaction and deluge valves and supply pipe against freezing. [**13:**7.3.1.8.2.3]

5.2.3.7 Semiautomatic dry systems shall be one of the following types:

(1) A single interlock system, which admits water to piping upon operation of the remote control activation device
(2) A non-interlock system, which admits water to piping upon operation of remote control activation device or hose valve
(3) A double interlock system, which admits water to piping upon operation of both remote control activation devices and hose valves

5.2.4* Manual Dry. A manual dry standpipe system shall be a dry standpipe system that does not have a permanent water supply attached to the system.

5.2.5* Manual Wet. A manual wet standpipe system shall be a wet standpipe system connected to a small water supply for the purpose of maintaining water within the system or sharing a water supply with an automatic sprinkler system, but not having a water supply capable of delivering the system demand attached to the system.

5.3 Classes of Standpipe Systems.

5.3.1 Class I Systems. A Class I standpipe system shall provide 2½ in. (65 mm) hose connections to supply water for use by fire departments and those trained in handling heavy fire streams.

5.3.2 Class II Systems.

5.3.2.1 A Class II standpipe system shall provide 1½ in. (40 mm) hose stations to supply water for use primarily by trained personnel or by the fire department during initial response.

5.3.2.2 A minimum 1 in. (25.4 mm) hose shall be permitted to be used for hose stations in light hazard occupancies where investigated and listed for this service and where approved by the authority having jurisdiction.

5.3.3 Class III Systems. A Class III standpipe system shall provide 1½ in. (40 mm) hose stations to supply water for use by trained personnel and 2½ in. (65 mm) hose connections to supply a larger volume of water for use by fire departments and those trained in handling heavy fire streams.

5.3.3.1 A minimum 1 in. (25.4 mm) hose shall be permitted to be used for hose stations in light hazard occupancies where investigated and listed for this service and where approved by the authority having jurisdiction.

5.3.3.2 Where the building is protected throughout by an approved automatic sprinkler system, Class II hose stations for use by trained personnel shall not be required, subject to the approval of the authority having jurisdiction, provided that each Class I hose connection is 2½ in. (65 mm) and is equipped with a 2½ in. × 1½ in. (65 mm × 40 mm) reducer and a cap attached with a chain, the 130 ft (39.7 m) travel distance limitation shall not apply.

5.4* Required Type of System.

5.4.1 Class I Standpipe Systems.

5.4.1.1 Class I standpipe systems shall be permitted to be any type described in Section 5.2 in buildings not classified as high-rise buildings.

5.4.1.2 Class I standpipe systems in buildings classified as high-rise buildings shall be automatic or semiautomatic.

--`,,```,,,,````-`-`,,`,,`,`,,`---

Copyright National Fire Protection Association
Provided by IHS under license with NFPA
No reproduction or networking permitted without license from IHS
Not for Resale

5.4.1.2.1 In buildings classified as high-rise, all required standpipes shall be automatic or semiautomatic, including partial height and horizontal standpipes that serve only a portion or limited number of floors within the building.

5.4.1.3 Where an existing standpipe system having standpipes with a minimum diameter of 4 in. (100 mm) is to be utilized to supply a new retrofit sprinkler system, the water supply required by Section 7.10 shall not be required to be provided by automatic or semiautomatic means, provided that the water supply is adequate to supply the hydraulic demand of the sprinkler system in accordance with NFPA 13, *Standard for the Installation of Sprinkler Systems*.

5.4.1.4 Class I standpipe systems shall be wet systems except where piping is subject to freezing.

5.4.2 Manual Standpipe Systems. Where a manual standpipe system is provided, each hose connection shall be provided with a conspicuous sign that reads "MANUAL STANDPIPE FOR FIRE DEPARTMENT USE ONLY."

5.4.3 Class II and Class III Standpipe Systems. Class II and Class III standpipe systems shall be automatic wet systems unless located in a facility where piping is subject to freezing and where a fire brigade is trained to operate the system without fire department intervention, in which case an automatic dry or semiautomatic dry system shall be permitted.

5.5* Gauges.

5.5.1 A listed 3½ in. (90 mm) dial spring pressure gauge shall be connected to each discharge pipe from the fire pump and the public waterworks, at the pressure tank, at each main drain connection, at the air pump supplying the pressure tank, and at the top of each standpipe.

5.5.1.1 Gauges shall be located in a place so that water cannot freeze.

5.5.1.2 Each gauge shall be controlled by a valve having an arrangement for draining.

5.5.1.3 Where several standpipes are interconnected at the top, a single gauge shall be permitted to be substituted for a gauge at the top of each standpipe.

5.5.1.4 Pressure gauges shall be installed above and below each alarm check valve, backflow preventer, or system riser check valve where such devices are present. [**13:**7.1.1.2]

5.5.2 A valved outlet for a pressure gauge shall be installed on the upstream side of every pressure-regulating device.

5.6* Waterflow and Supervisory Alarms.

5.6.1 Where required by the authority having jurisdiction for automatic or semiautomatic systems, listed waterflow and supervisory alarms shall be provided.

5.6.2 Waterflow alarms shall utilize a sensing mechanism appropriate to the type of standpipe.

5.6.3 Paddle-type waterflow alarms shall be used on wet standpipe systems only.

5.6.4 A test connection for testing the waterflow device shall be provided.

5.6.5 Alarm and supervisory devices shall be installed in accordance with *NFPA 72, National Fire Alarm Code*.

Chapter 6 Installation Requirements

6.1* Location and Protection of Piping.

6.1.1 Location of Dry Standpipes. Dry standpipes shall not be concealed unless the piping integrity is monitored with supervisory air pressure, in accordance with *NFPA 72, National Fire Alarm Code*.

6.1.2 Protection of Aboveground Piping.

6.1.2.1* Standpipe system piping shall be protected from mechanical damage.

6.1.2.2 Standpipes and lateral piping supplied by standpipes shall be located in enclosed exit stairways or shall be protected by a degree of fire resistance equal to that required for enclosed exit stairways in the building in which they are located.

6.1.2.2.1 In buildings equipped with an approved automatic sprinkler system, lateral piping to 2½ in. (65 mm) hose connections shall not be required to be protected.

6.1.2.2.2 Piping connecting standpipes to 1½ in. (40 mm) hose connections shall not be required to be protected.

6.1.2.2.3 Where exit stairways are not required to be enclosed in fire-rated construction, standpipe systems shall be permitted to be installed without the fire resistance required by 6.1.2.2.

6.1.2.3 Where a standpipe or lateral pipe that is normally filled with water passes through an area subject to freezing temperatures, it shall be protected to maintain the temperature of the water in the piping between 40°F and 120°F (4.4°C and 48.9°C).

6.1.2.3.1 Antifreeze solutions shall not be used to protect standpipe system piping from freezing.

6.1.2.3.2 Listed heat tracing shall be permitted to be used for protection from freezing provided that it is installed and insulated in accordance with the manufacturer's specifications.

6.1.2.4 Where corrosive conditions exist or piping is exposed to the weather, corrosion-resistant types of pipe, tube, fittings, and hangers or protective corrosion-resistive coatings shall be used.

6.1.2.5 To minimize or prevent pipe breakage where subject to earthquakes, standpipe systems shall be protected in accordance with NFPA 13, *Standard for the Installation of Sprinkler Systems*.

6.1.2.6 Where standpipe systems are required to be protected against damage from earthquakes, standpipe systems shall be protected in accordance with NFPA 13, *Standard for the Installation of Sprinkler Systems*.

6.2 Underground Piping. Underground piping shall be in accordance with NFPA 24, *Standard for the Installation of Private Fire Service Mains and Their Appurtenances*.

6.3 Gate Valves and Check Valves.

6.3.1 Connection to Water Supply.

6.3.1.1 Connections to each water supply shall be provided with an approved indicating-type valve and check valve located close to the supply, such as at tanks, pumps, and connections from waterworks systems.

Copyright National Fire Protection Association
Provided by IHS under license with NFPA
No reproduction or networking permitted without license from IHS
Not for Resale

6.3.1.2 Fire department connections shall not be provided with isolation valves.

6.3.2 Valves shall be provided to allow isolation of a standpipe without interrupting the supply to other standpipes from the same source of supply.

6.3.3 Listed indicating-type valves shall be provided at the standpipe for controlling branch lines for remote hose stations.

6.3.4 Where wafer-type valve discs are used, they shall be installed so that they do not interfere with the operation of other system components.

6.3.5* Control Valves and Check Valves on Combined (Standpipe/Sprinkler) Systems.

6.3.5.1 Each connection from a standpipe that is part of a combined system to a sprinkler system shall have an individual control valve and check valve of the same size as the connection.

6.3.5.2 A listed pressure-regulating device that prevents backflow shall be considered a check valve, and an additional check valve shall not be required.

6.3.6 Valves on Connections to Water Supplies.

6.3.6.1 General.

6.3.6.1.1* Each water supply, other than the fire department connection, shall be provided with a listed indicating valve in an approved location.

6.3.6.1.2 Valves on fire department connections shall be in accordance with Section 6.3.

6.3.6.1.2.1 All valves shall be plainly marked to indicate the service that they control.

6.3.6.1.2.2 Where the valve cannot be located at least 40 ft (12.2 m) from the building, it shall be installed in an approved location and where it is readily accessible in case of fire and not subject to damage.

6.3.6.1.3 Where post-indicator valves cannot be used, underground valves shall be permitted.

6.3.6.1.3.1 The valve locations, directions for their opening, and services that they control shall be plainly marked on the buildings served.

6.3.6.2* Where the standpipes are supplied from a yard main or header in another building, the connection shall be provided with a listed indicating-type valve located outside at a safe distance from the building or at the header.

6.3.7 Valve Supervision.

6.3.7.1 System water supply valves, isolation control valves, and other valves in feed mains shall be supervised in an approved manner in the open position by one of the following methods:

(1) A central station, proprietary, or remote station signaling service
(2) A local signaling service that initiates an audible signal at a constantly attended location
(3) Locking of valves in the open position
(4) Sealing of valves and an approved weekly recorded inspection where valves are located within fenced enclosures under the control of the owner

6.3.7.2 Underground gate valves with roadway boxes shall not be required to be supervised.

6.3.8 Signs for Room Identification, Valves, and Hose Connections.

6.3.8.1 All main and sectional system control valves, including water supply control valves, shall have a sign indicating the portion of the system that is controlled by the valve.

6.3.8.2 All control, drain, and test connection valves shall be provided with signs indicating their purpose.

6.3.8.3 Where sprinkler system piping supplied by a combined system is supplied by more than one standpipe ("loop" or "dual feed" design), a sign shall be located at each dual or multiple feed connection to the combination system standpipe to indicate that in order to isolate the sprinkler system served by the control valve, an additional control valve or valves at other standpipes shall be shut off.

6.3.8.3.1 The sign also shall identify the location of the additional control valves.

6.3.8.4 Where a main or sectional system control valve is located in a closed room or concealed space, the location of the valve shall be indicated by a sign in an approved location on the outside of the door or near the opening to the concealed space.

6.3.8.5* Where hose connections are not located in exit stairways, signs shall be provided in accordance with NFPA 170, *Standard for Fire Safety and Emergency Symbols*, to identify the location of the hose connection in an approved manner.

6.3.8.5.1 Valve cabinets, where provided, shall be marked to indicate the contents.

6.3.8.5.2 Letters shall be red with a white background and shall be 2½ in. (65 mm) in height.

6.4* Fire Department Connections.

6.4.1 Shutoff valves shall not be installed between the fire department connection and the system.

6.4.2 A listed check valve shall be installed in each fire department connection and located as near as practicable to the point where it joins the system.

6.4.3 The fire department connection shall be installed as follows:

(1) *Automatic Wet and Manual Wet Standpipe Systems.* On the system side of the system control valve, check valve, or any pump, but on the supply side of any isolating valves required in 6.3.2
(2) *Automatic Dry Standpipe Systems.* On the system side of the control valve and check valve and the supply side of the dry pipe valve
(3) *Semiautomatic Dry Standpipe Systems.* On the system side of the deluge valve
(4) *Manual Dry Standpipe Systems.* Directly connected to system piping

6.4.4 In areas subject to freezing, a listed automatic drip valve that is arranged to allow drainage without causing water damage shall be installed in the piping between the check valve and the fire department connection.

6.4.5 Location and Identification.

6.4.5.1 Fire department connections shall be visible and recognizable from the street or nearest point of fire department apparatus accessibility or on the street side of buildings.

Copyright National Fire Protection Association
Provided by IHS under license with NFPA
No reproduction or networking permitted without license from IHS
Not for Resale

6.4.5.1.1 Fire department connections shall be located and arranged so that hose lines can be attached to the inlets without interference from nearby objects, including buildings, fences, posts, landscaping, vehicles, or other fire department connections.

6.4.5.2 Each fire department connection shall be designated by a sign having letters, at least 1 in. (25.4 mm) in height, that reads "STANDPIPE."

6.4.5.2.1 If automatic sprinklers are also supplied by the fire department connection, the sign or combination of signs shall indicate both designated services (e.g., "STANDPIPE AND AUTOSPKR," or "AUTOSPKR AND STANDPIPE").

6.4.5.2.2 A sign also shall indicate the pressure required at the inlets to deliver the system demand.

6.4.5.3 Where a fire department connection services multiple buildings, structures, or locations, a sign shall be provided indicating the buildings, structures, or locations served.

6.4.5.4* Fire department connections shall be located not more than 100 ft (30.5 m) from the nearest fire hydrant connected to an approved water supply.

6.4.5.4.1 The location of the fire department connection shall be permitted to exceed 100 ft (30.5 m) subject to the approval of the authority having jurisdiction.

6.4.6 Fire department connections shall be located not less than 18 in. (457 mm) nor more than 48 in. (1219 mm) above the level of the adjoining ground, sidewalk, or grade surface.

6.4.7 Fire department connection piping shall be supported in accordance with Section 6.4.

6.5 Support of Piping. System piping shall be in accordance with NFPA 13, *Standard for the Installation of Sprinkler Systems*.

6.6 Installation of Signs. Signs shall be secured to a device or the building wall with corrosion-resistant chains or fasteners.

6.7 Signs for Water Supply Pumps. Where a fire pump is provided, a sign shall be located in the vicinity of the pump indicating the minimum pressure and flow required at the pump discharge flange to meet the system demand.

6.8* Hydraulic Design Information Sign.

6.8.1 The installing contractor shall provide a sign identifying the basis of the system design as either hydraulic calculations or pipe schedule.

6.8.2 The sign shall be located at the water supply control valve for automatic or semiautomatic standpipe systems and at an approved location for manual systems.

6.8.3 The sign shall indicate the following:

(1) Location of the two hydraulically most remote hose connections
(2) Design flow rate for the connections identified in 6.8.3(1)
(3) Design residual inlet and outlet pressures for the connections identified in 6.8.3(1)
(4) Design static pressure and the design system demand (i.e., flow and residual pressure) at the system control valve, or at the pump discharge flange where a pump is installed, and at each fire department connection

Chapter 7 Design

7.1* General. The design of the standpipe system is governed by building height, area per floor occupancy classification, egress system design, required flow rate and residual pressure, and the distance of the hose connection from the source(s) of the water supply.

7.1.1* When pressure-regulating devices are used, they shall be approved for installation within the maximum and minimum anticipated flow conditions.

7.2* Pressure Limitation. The maximum pressure at any point in the system at any time shall not exceed 350 psi (24 bar).

7.2.1 Maximum Pressure for Hose Connections.

7.2.1.1 Where the residual pressure at a 1½ in. (40 mm) outlet on a hose connection exceeds 100 psi (6.9 bar), an approved pressure-regulating device shall be provided to limit the residual pressure at the flow required by Section 7.10 to 100 psi (6.9 bar).

7.2.1.2 Where the static pressure at a hose connection exceeds 175 psi (12.1 bar), an approved pressure-regulating device shall be provided to limit static and residual pressures at the outlet of the hose connection to 100 psi (6.9 bar) for 1½ in. (40 mm) hose connections and 175 psi (12.1 bar) for other hose connections. The pressure on the inlet side of the pressure-regulating device shall not exceed the device's rated working pressure.

7.2.2* When system pressure-regulating devices are used in lieu of providing separate pumps, multiple zones shall be permitted to be supplied by a single pump and pressure-regulating device(s) under the following conditions:

(1) Pressure-regulating device(s) shall be permitted to control pressure in the lower zone(s).
(2) A method to isolate the pressure-regulating device(s) shall be provided for maintenance and repair.
(3) Regulating devices shall be arranged so that the failure of any single device does not allow pressure in excess of 175 psi (12.1 bar) to more than two hose connections.
(4) An equally sized bypass around the pressure-regulating device(s), with a normally closed control valve, shall be installed.
(5) Pressure-regulating device(s) shall be installed not more than 7 ft 6 in. (2.31 m) above the floor.
(6) The pressure-regulating device shall be provided with inlet and outlet pressure gauges.
(7) The fire department connection(s) shall be connected to the system side of the outlet isolation valve.
(8) The pressure-regulating device shall be provided with a pressure relief valve in accordance with the manufacturers recommendations.
(9) Remote monitoring and supervision for detecting high pressure failure of the pressure-regulating device shall be provided in accordance with *NFPA 72, National Fire Alarm Code*.

7.3 Locations of Hose Connections.

7.3.1* General.

7.3.1.1 Hose connections and hose stations shall be unobstructed and shall be located not less than 3 ft (0.9 m) or more than 5 ft (1.5 m) above the floor.

7.3.1.2 The hose connection shall not be obstructed by the closed or open door or other objects on the landing.

Copyright National Fire Protection Association
Provided by IHS under license with NFPA
No reproduction or networking permitted without license from IHS
Not for Resale

7.3.2* Class I Systems. Class I systems shall be provided with 2½ in. (65 mm) hose connections in the following locations:

(1) At the highest intermediate landing between floor levels in every required exit stairway
(2) On each side of the wall adjacent to the exit openings of horizontal exits
(3) In other than covered mall buildings, in each exit passageway at the entrance from the building areas into the passageway
(4) In covered mall buildings, at the entrance to each exit passageway or exit corridor, and at the interior side of public entrances from the exterior to the mall
(5)*At the highest landing of stairways with stairway access to a roof, and on roofs with a slope of less than 3 in 12 where stairways do not access the roof

7.3.2.1 Hose connections shall be permitted to be located at the main floor landings in exit stairways where approved by the authority having jurisdiction.

7.3.2.2 An additional 2½ in. (65 mm) hose connection shall be provided at the hydraulically most remote portion of the system to facilitate testing.

7.3.2.3* Where the most remote portion of a nonsprinklered floor or story is located in excess of 150 ft (45.7 m) of travel distance from a required exit containing or adjacent to a hose connection, or the most remote portion of a sprinklered floor or story is located in excess of 200 ft (61 m) of travel distance from a required exit containing or adjacent to a hose connection, additional hose connections shall be provided, in approved locations, where required by the local fire department or the authority having jurisdiction.

7.3.3* Class II Systems.

7.3.3.1 Class II systems shall be provided with 1½ in. (40 mm) hose stations so that all portions of each floor level of the building are within 130 ft (39.7 m) of a hose connection provided with 1½ in. (40 mm) hose or within 120 ft (36.6 m) of a hose connection provided with less than 1½ in. (40 mm) hose.

7.3.3.2 Distances shall be measured along a path of travel originating at the hose connection.

7.3.4 Class III Systems. Class III systems shall be provided with hose connections as required for both Class I and Class II systems.

7.3.4.1 Where the building is protected throughout by an approved automatic sprinkler system in accordance with NFPA 13, *Standard for the Installation of Sprinkler Systems*, and NFPA 13R, *Standard for the Installation of Sprinkler Systems in Residential Occupancies up to and Including Four Stories in Height*, Class II hose stations for use by trained personnel shall not be required, subject to the approval of the local fire department and the authority having jurisdiction, provided that each Class I hose connection is 2½ in. (65 mm) and is equipped with a 2½ in. × 1½ in. (65 mm × 40 mm) reducer and a cap attached with a chain.

7.3.4.1.1 The 130 ft (39.7 m) travel distance limitation shall not apply to Class III systems.

7.3.4.1.2 For Class III systems installed without hose, the water supply requirements shall be as specified for Class I systems.

7.4 Number of Standpipes. Separate standpipes shall be provided in each required exit stairway.

7.5* Interconnection of Standpipes.

7.5.1 Where two or more standpipes are installed in the same building or section of building, they shall be interconnected.

7.5.2 Where standpipes are supplied by tanks located at the top of the building or zone, the following criteria shall be met:

(1) The standpipes also shall be interconnected at the top.
(2) Check valves shall be installed at the base of each standpipe to prevent circulation.

7.6 Minimum Sizes for Standpipes and Branchlines.

7.6.1 Class I and Class III standpipes shall be at least 4 in. (100 mm) in size.

7.6.2 Standpipes that are part of a combined system shall be at least 6 in. (150 mm) in size.

7.6.3 Where the building is protected throughout by an approved automatic sprinkler system in accordance with NFPA 13, *Standard for the Installation of Sprinkler Systems*, and NFPA 13R, *Standard for the Installation of Sprinkler Systems in Residential Occupancies up to and Including Four Stories in Height*, the minimum standpipe size shall be 4 in. (100 mm) for hydraulically calculated systems.

7.6.4 Branch lines shall be sized based on the hydraulic criteria established in Section 7.8 and Section 7.10 but not less than 2½ in. (65 mm).

7.7 System Design and Sizing of Pipe for Delivery of System Demand.

7.7.1 Class I and Class III standpipe systems shall be designed so that the system demand can be supplied by each fire department connection, which is provided in accordance with Section 7.12.

7.7.2 Where an automatic or semiautomatic water supply is required for a Class I, II, or III standpipe system by Section 5.4, the standpipe system shall be designed so that the system demand can be independently supplied by the attached water supply and each fire department connection provided on the system.

7.7.3 Where a manual system is permitted by Section 5.4 and an attached water supply is provided to supply an automatic sprinkler system or to maintain water in a wet system, the attached water supply shall not be required to satisfy the standpipe system demand.

7.7.4 Where a standpipe system is provided with a fire department connection, the local fire department shall be consulted regarding the water supply available from a fire department pumper.

7.8* Minimum and Maximum Pressure Limits.

7.8.1 Minimum Design Pressure for Hydraulically Designed Systems. Hydraulically designed standpipe systems shall be designed to provide the waterflow rate required by Section 7.10 at a minimum residual pressure of 100 (6.9 bar) at the outlet of the hydraulically most remote 2½ in. (65 mm) hose connection and 65 psi (4.5 bar) at the outlet of the hydraulically most remote 1½ in. (40 mm) hose station.

7.8.2 Minimum Design Pressure for Pipe Schedule Designed Systems.

7.8.2.1 Pipe schedule designed standpipe systems shall have piping sized in accordance with the pipe schedule in Table 7.8.2.1 to provide the required waterflow rate at a minimum residual pressure of 100 psi (6.9 bar) at the topmost 2½ in. (65 mm) hose connection and 65 psi (4.5 bar) at the topmost 1½ in. (40 mm) hose station.

7.8.2.2 Pipe schedule designs shall be limited to wet standpipes for buildings that are not high-rise buildings.

--`,,```,,,,````-`-`,,`,,`,`,,`---
Copyright National Fire Protection Association
Provided by IHS under license with NFPA
No reproduction or networking permitted without license from IHS
Not for Resale

Table 7.8.2.1 Pipe Schedule Standpipes and Supply Piping Minimum Nominal Pipe Sizes (in Inches)

Total Accumulated Flow		Total Distance of Piping from Farthest Outlet		
gpm	L/min	<50 ft (<15.2 m)	50–100 ft (15.2–30.5 m)	>100 ft (>30.5 m)
100	379	2	2½	3
101–500	382–1893	4	4	6
501–750	1896–2839	5	5	6
751–1250	2843–4731	6	6	6
1251 and over	4735	8	8	8

For SI units, 1 in. = 25.4 mm.

7.8.3* Maximum Pressure at Hose Connections.

7.8.3.1 Where the residual pressure at a 1½ in. (40 mm) outlet on a hose connection available for trained personnel use exceeds 100 psi (6.9 bar), an approved pressure-regulating device shall be provided to limit the residual pressure at the flow required by Section 7.10 to 100 psi (6.9 bar).

7.8.3.2* Where the static pressure at a hose connection exceeds 175 psi (12.1 bar), an approved pressure-regulating device shall be provided to limit static and residual pressures at the outlet of the hose connection to 100 psi (6.9 bar) for 1½ in. (40 mm) hose connections available for trained personnel use and 175 psi (12.1 bar) for other hose connections.

7.8.3.3 The pressure on the inlet side of the pressure-regulating device shall not exceed the device's rated working pressure.

7.9 Standpipe System Zones.

7.9.1 Each standpipe system zone created due to system component pressure limitations, requiring pumps, shall be provided with a separate pump.

7.9.1.1 The requirement in 7.9.1 shall not preclude the use of pumps arranged in series.

7.9.2 Where pumps supplying two or more zones are located at the same level, each zone shall have separate and direct supply piping of a size not smaller than the standpipe that it serves.

7.9.2.1 Zones with two or more standpipes shall have at least two direct supply pipes of a size not smaller than the largest standpipe that they serve.

7.9.3 Where the supply for each zone is pumped from the next lower zone, and the standpipe or standpipes in the lower zone are used to supply the higher zone, such standpipes shall comply with the provisions for supply lines in 7.9.2.

7.9.3.1 At least two lines shall be provided between zones.

7.9.3.2 One of the lines specified in 7.9.3.1 shall be arranged so that the supply can be automatically delivered from the lower to the higher zone.

7.9.4 For systems with two or more zones in which portions of the second and higher zones cannot be supplied using the residual pressure required by Section 7.8 by means of fire department pumpers through a fire department connection, an auxiliary means of supply shall be provided.

7.9.4.1 The auxiliary means shall be in the form of high-level water storage with additional pumping equipment or other means acceptable to the authority having jurisdiction.

7.10 Flow Rates.

7.10.1 Class I and Class III Systems.

7.10.1.1* Minimum Flow Rate.

7.10.1.1.1 For Class I and Class III systems, the minimum flow rate for the hydraulically most remote standpipe shall be 500 gpm (1893 L/min), and the calculation procedure shall be in accordance with 7.10.1.2.

7.10.1.1.2* Where a horizontal standpipe on a Class I and Class III system supplies three or more hose connections on any floor, the minimum flow rate for the hydraulically most demanding horizontal standpipe shall be 750 gpm (2840 L/min), and the calculation procedure shall be in accordance with 7.10.1.2.

7.10.1.1.3 The minimum flow rate for additional standpipes shall be 250 gpm (946 L/min) per standpipe, with the total not to exceed 1250 gpm (4731 L/min) or 1000 gpm (3785 L/min) for buildings sprinklered throughout.

7.10.1.1.4 Flow rates for combined systems shall be in accordance with 7.10.1.3.

7.10.1.1.4.1 When the floor area exceeds 80,000 ft^2 (7432 m^2), the second most remote standpipe shall be designed to accommodate 500 gpm (1893 L/min).

7.10.1.2* Hydraulic Calculation Requirements.

7.10.1.2.1 Hydraulic calculations and pipe sizes for each standpipe shall be based on providing 250 gpm (946 L/min) at the two hydraulically most remote hose connections on the standpipe and at the topmost outlet of each of the other standpipes at the minimum residual pressure required by Section 7.8.

7.10.1.2.2 Where a horizontal standpipe on a Class I and Class III system supplies three or more hose connections on any floor, hydraulic calculations and pipe sizes for each standpipe shall be based on providing 250 gpm (946 L/min) at the three hydraulically most remote hose connections on the standpipe and at the topmost outlet of each of the other standpipes at the minimum residual pressure required by Section 7.8.

7.10.1.2.3 Common supply piping shall be calculated and sized to provide the required flow rate for all standpipes connected to such supply piping, with the total not to exceed 1250 gpm (4731 L/min).

7.10.1.3 Combined Systems.

7.10.1.3.1 For a building protected throughout by an approved automatic sprinkler system, the system demand established by Section 7.7 and 7.10.1 also shall be permitted to serve the sprinkler system.

7.10.1.3.1.1 Where the sprinkler system water supply requirement, including the hose stream allowance as determined in accordance with NFPA 13, *Standard for the Installation of Sprinkler Systems*, exceeds the system demand established by Section 7.7 and 7.10.1, the larger of the two values shall be provided.

7.10.1.3.1.2 A separate sprinkler demand shall not be required.

Copyright National Fire Protection Association
Provided by IHS under license with NFPA
No reproduction or networking permitted without license from IHS
Not for Resale

7.10.1.3.2 For a combined system in a building equipped with partial automatic sprinkler protection, the flow rate required by 7.10.1 shall be increased by an amount equal to the hydraulically calculated sprinkler demand or 150 gpm (568 L/min) for light hazard occupancies, or by 500 gpm (1893 L/min) for ordinary hazard occupancies, whichever is less.

7.10.2 Class II Systems.

7.10.2.1 Minimum Flow Rate.

7.10.2.1.1 For Class II systems, the minimum flow rate for the hydraulically most remote hose connection shall be 100 gpm (379 L/min).

7.10.2.1.2 Additional flow shall not be required where more than one hose connection is provided.

7.10.2.2 Hydraulic Calculation Requirements.

7.10.2.2.1 Hydraulic calculations and pipe sizes for each standpipe shall be based on providing 100 gpm (379 L/min) at the hydraulically most remote hose connection on the standpipe at the minimum residual pressure required by Section 7.8.

7.10.2.2.2 Common supply piping serving multiple standpipes shall be calculated and sized to provide 100 gpm (379 L/min).

7.10.3 Maximum Flow Rates for Individual Connections.

7.10.3.1 The maximum flow required from a 2½ in. (65 mm) hose connection shall be 250 gpm (946 L/min).

7.10.3.2 The maximum flow required from a 1½ in. (40 mm) hose connection shall be 100 gpm (379 L/min).

7.11* Drains and Test Riser.

7.11.1 A permanently installed 3 in. (76 mm) drain riser shall be provided adjacent to each standpipe equipped with pressure-regulating devices to facilitate tests of each device.

7.11.1.1 The riser shall be equipped with a 3 in. × 2½ in. (76 mm × 65 mm) tee with an internal threaded swivel fitting having NHS threads, as specified in NFPA 1963, *Standard for Fire Hose Connections*, with a plug, and shall be located on at least every other floor.

7.11.1.2 Each drain riser shall terminate with a full-size elbow to grade or receptor that will receive the full flow from the drain riser.

7.11.1.3 Where drain risers are interconnected and run to a common discharge point, all piping shall be sized for the combined flow.

7.11.1.4 Where local fire department hose threads do not conform to NFPA 1963, *Standard for Fire Hose Connections*, the authority having jurisdiction shall designate the hose threads to be used.

7.11.2 Auxiliary Drains. Standpipe systems shall be provided with a means of draining.

7.11.2.1 Auxiliary drains shall be installed in accordance with NFPA 13, *Standard for the Installation of Sprinkler Systems*, where a change in piping direction results in trapped sections of pipe.

7.11.2.2 A drain valve and piping, located at the lowest point of the standpipe piping downstream of the isolation valve, shall be arranged to discharge water at an approved location.

7.11.2.3 Sizing shall be as specified in Table 7.11.2.3.

Table 7.11.2.3 Sizing for Standpipe Drains

Standpipe Size	Size of Drain Connection
Up to 2 in. (50 mm)	¾ in. (20 mm) or larger
2½ in. (65 mm), 3 in. (80 mm), or 3½ in. (90 mm)	1¼ in. (32 mm) or larger
4 in. (100 mm) or larger	2 in. (50 mm) only

7.11.3 Main Drain Test Connections. See Figure 7.11.3.

7.11.3.1 Main drain test connections shall be provided at locations that permit flow tests of water supply connections.

7.11.3.2 Main drain test connections shall be so installed that the valve can be opened wide without causing water damage.

7.11.3.3 Main drain connections shall be sized in accordance with 7.11.2.

7.12* Fire Department Connections.

7.12.1 One or more fire department connections shall be provided for each zone of each Class I or Class III standpipe system.

7.12.1.1 The high zone fire department connection(s) shall not be required to be provided where 7.9.4 applies.

7.12.2 High-rise buildings shall have at least two remotely located fire department connections for each zone.

7.12.2.1 A single connection for each zone shall be permitted where acceptable to the fire department.

7.12.3 Fire department connection sizes shall be based on the standpipe system demand and shall include one 2½ in. (65 mm) inlet per every 250 gpm (946 L/min).

7.12.3.1 An approved large diameter hose connection of a size to accommodate the required flow shall be permitted.

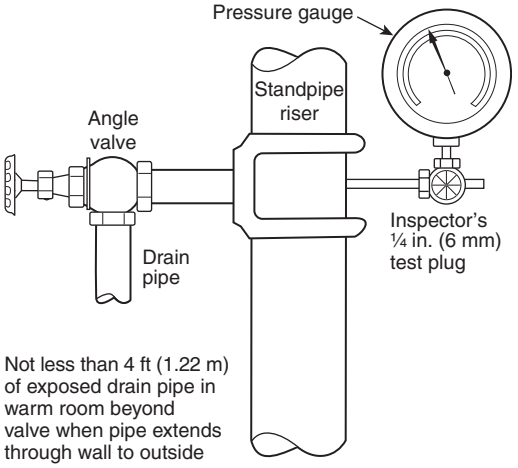

FIGURE 7.11.3 Drain Connection for System Riser.

Copyright National Fire Protection Association
Provided by IHS under license with NFPA
No reproduction or networking permitted without license from IHS
Not for Resale

Chapter 8 Plans and Calculations

8.1* Plans and Specifications.

8.1.1 Plans accurately showing the details and arrangement of the standpipe system shall be furnished to the authority having jurisdiction prior to the installation of the system.

8.1.2 Plans shall be clear, legible, and drawn to scale.

8.1.3 The drawings shall show the location, arrangement, water supply, equipment, and all other details necessary to establish compliance with this standard.

8.1.4 The plans shall include specifications covering the character of materials used and shall describe all system components.

8.1.5 The plans shall include an elevation diagram.

8.2 Hydraulic Calculations.

8.2.1 Standpipe system piping shall be sized by hydraulic calculations.

8.2.2 A complete set of calculations shall be submitted with the plans.

8.2.3 Hydraulic calculations shall be prepared on form sheets that include a summary sheet, detailed worksheets, and a graph sheet. [**13:**14.3.1]

8.2.4 Summary Sheet. The summary sheet shall contain the following information, where applicable:

(1) Date
(2) Location
(3) Name of owner and occupant
(4) Building number or other identification
(5) Description of hazard
(6) Name and address of contractor or designer
(7) Name of approving agency
(8) System design requirements, as follows:
    (a) Number of standpipes flowing
    (b) Minimum rate of water application gpm (L/min)
(9) Total water requirements as calculated, including allowance for inside hose, outside hydrants, and sprinklers for buildings with partial sprinkler protection [**13:**22.3.2]

8.2.5 Detailed Worksheets. Detailed worksheets or computer printout sheets shall contain the following information:

(1) Sheet number
(2) Hose connection description and discharge constant (K)
(3) Hydraulic reference points
(4) Flow in gpm (L/min)
(5) Pipe size
(6) Pipe lengths, center-to-center of fittings
(7) Equivalent pipe lengths for fittings and devices
(8) Friction loss in psi/ft (bar/m) of pipe
(9) Total friction loss between reference points
(10) Devices per 8.3.1.5
(11) Elevation head in psi (bar) between reference points
(12) Required pressure in psi (bar) at each reference point
(13) Velocity pressure and normal pressure if included in calculations
(14) Notes to indicate starting points or reference to other sheets or to clarify data shown [**13:**22.3.3]

8.2.6 Graph Sheet. A graphic representation of the complete hydraulic calculation shall be plotted on semiexponential graph paper ($Q^{1.85}$) and shall include the following:

(1) Water supply curve
(2) Standpipe system demand
(3) Hose demand (where applicable)
(4) Partial sprinkler demand where applicable *(see 7.10.1.3.2)*

8.3 Hydraulic Calculation Procedures.

8.3.1 General.

8.3.1.1 For all systems, the hydraulic calculations shall be the most demanding based on the criteria of Chapter 7.

8.3.1.2 Calculations shall begin at the outlet of each hose connection and shall include the friction loss for the hose valve and any connecting piping from the hose valve to the standpipe.

8.3.1.3 Table 8.3.1.3 shall be used to determine the equivalent length of pipe for fittings and devices unless the manufacturer's test data indicate that other factors are more accurate.

8.3.1.4 For saddle-type fittings having friction loss greater than that shown in Table 8.3.1.3, the increased friction loss shall be included in the hydraulic calculations.

8.3.1.5 Valves. Specific friction loss values or equivalent pipe lengths for alarm valves, dry pipe valves, deluge valves, strainers, pressure-regulating device, backflow preventer, and other devices shall be made available to the authority having jurisdiction. [**13:**14.4.3.3]

8.3.1.6 Differing Values. Specific friction loss values or equivalent pipe lengths for listed fittings not in Table 4.3.1 shall be used in hydraulic calculations where these losses or equivalent pipe lengths are different from those shown in Table 8.3.1.3. [**13:**14.4.3.4]

8.3.2 Adjustments.

8.3.2.1 Table 8.3.1.3 shall be used only where the Hazen-Williams *C* factor is 120.

8.3.2.2 For other values of *C*, the values in Table 8.3.1.3 shall be multiplied by the factors indicated in Table 8.3.2.2.

8.3.2.3 Table 8.3.2.3 indicates typical *C* factors that shall be used for commonly used piping materials.

8.3.2.4 The authority having jurisdiction shall be permitted to require other *C* values.

8.3.3 Formulas.

8.3.3.1 Friction Loss Formula.

8.3.3.1.1 Pipe friction losses shall be determined on the basis of the Hazen-Williams formula, as follows:

$$p = \frac{4.52Q^{1.85}}{C^{1.85}d^{4.87}}$$

where:
p = frictional resistance in psi per foot of pipe
Q = flow in gpm
C = friction loss coefficient
d = actual internal diameter of pipe in inches
[**13:**14.4.2.1.1]

Copyright National Fire Protection Association
Provided by IHS under license with NFPA
No reproduction or networking permitted without license from IHS
Not for Resale

Table 8.3.1.3 Equivalent Pipe Length Chart

Fittings and Valves	Fittings and Valves Expressed in Equivalent Feet of Pipe													
	¾ in.	1 in.	1¼ in.	1½ in.	2 in.	2½ in.	3 in.	3½ in.	4 in.	5 in.	6 in.	8 in.	10 in.	12 in.
45 degree elbow	1	1	1	2	2	3	3	3	4	5	7	9	11	13
90 degree standard elbow	2	2	3	4	5	6	7	8	10	12	14	18	22	27
90 degree long-turn elbow	1	2	2	2	3	4	5	5	6	8	9	13	16	18
Tee or cross (flow turned 90 degrees)	3	5	6	8	10	12	15	17	20	25	30	35	50	60
Butterfly valve					6	7	10		12	9	10	12	19	21
Gate valve					1	1	1	1	2	2	3	4	5	6
Swing check*		5	7	9	11	14	16	19	22	27	32	45	55	65
Globe valve				46		70								
Angle valve				20		31								

For SI units, 1 in. = 25.4 mm.

* Due to the variations in design of swing check valves, the pipe equivalents indicated in this table are considered to be average.

Table 8.3.2.2 Adjustment Factors for *C* Values

Multiplying factor	*C* Value
0.713	100
1.16	130
1.33	140
1.51	150

Table 8.3.2.3 Hazen-Williams *C* Values

Pipe or Tube	*C* Value
Unlined cast or ductile iron	100
Black steel (dry systems, including preaction)	100
Black steel (wet systems, including deluge)	120
Galvanized (all)	120
Plastic (listed all)	150
Cement-lined cast or ductile iron	140
Copper tube or stainless steel	150

8.3.3.1.2 For SI units, the following equation shall be used:

$$p_m = 6.05\left(\frac{Q_m^{1.85}}{C^{1.85}d_m^{4.87}}\right)10^5$$

where:
p_m = frictional resistance in bar per meter of pipe
Q_m = flow in L/min
C = friction loss coefficient
d_m = actual internal diameter in mm [**13:**14.4.2.1.2]

8.3.3.2 Velocity Pressure Formula. Velocity pressure shall be determined on the basis of the following formula:

$$P_v = \frac{0.001123Q^2}{D^4}$$

where:
P_v = velocity pressure in psi (SI: 1 psi = 0.0689 bar)
Q = flow in gpm (SI: 1 gal = 3.785 L)
D = inside diameter in inches (SI: 1 in. = 25.4 mm) [**13:**14.4.2.2]

8.3.3.3 Normal Pressure Formula. Normal pressure shall be determined on the basis of the following formula:

$$P_n = P_t - P_v$$

where:
P_n = normal pressure
P_t = total pressure in psi (bar)
P_v = velocity pressure in psi (bar)

8.3.3.4 Hydraulic Junction Points.

8.3.3.4.1 Pressures at hydraulic junction points shall balance within 0.5 psi (0.03 bar). [**13:**14.4.2.4.1]

8.3.3.4.2 The highest pressure at the junction point, and the total flows as adjusted, shall be carried into the calculations. [**13:**14.4.2.4.2]

8.3.3.4.3 Pressure balancing shall be permitted through the use of a K-factor developed for branch lines or portions of systems using $K_p = Q/(p)^{0.5}$. [**13:**14.4.2.4.3]

Chapter 9 Water Supply

9.1* Required Water Supply.

9.1.1 Automatic and semiautomatic standpipe systems shall be attached to an approved water supply capable of supplying the system demand.

Copyright National Fire Protection Association
Provided by IHS under license with NFPA
No reproduction or networking permitted without license from IHS
Not for Resale

9.1.2 Manual standpipe systems shall have an approved water supply accessible to a fire department pumper.

9.1.3 A single automatic or semiautomatic water supply shall be permitted where it is capable of supplying the system demand for the required duration.

9.1.4 Where a secondary water supply is required by 7.9.4, a single water supply shall not be permitted.

9.1.5 Water supplies from the following sources shall be permitted:

(1) A public waterworks system where pressure and flow rate are adequate
(2) Automatic fire pumps connected to an approved water source in accordance with NFPA 20, *Standard for the Installation of Stationary Pumps for Fire Protection*
(3) Manually controlled fire pumps in combination with pressure tanks
(4) Pressure tanks installed in accordance with NFPA 22, *Standard for Water Tanks for Private Fire Protection*
(5) Manually controlled fire pumps operated by remote control devices at each hose station, supervised in accordance with *NFPA 72, National Fire Alarm Code,* at each hose station
(6) Gravity tanks installed in accordance with NFPA 22, *Standard for Water Tanks for Private Fire Protection*

9.2 Minimum Supply for Class I and Class III Systems. The water supply shall be capable of providing the system demand established by Sections 7.8 and 7.10 for at least 30 minutes.

9.3 Minimum Supply for Class II Systems. The minimum supply for Class II systems shall be capable of providing the system demand established by Sections 7.8 and 7.10 for at least 30 minutes.

Chapter 10 Water Supply Testing

10.1* Water Supply Evaluation. A waterflow test shall be conducted on the water distribution system to determine the rate of flow and pressures available for system design and for fire-fighting purposes.

10.2* Procedure. Tests for the purpose of system design shall not be conducted more than 1 year prior to system design.

Chapter 11 System Acceptance

11.1* General.

11.1.1 All new systems shall be tested prior to the occupancy of the building.

11.1.2 Existing standpipe systems that are to be utilized as standpipes for a combination system in the retrofit of a new sprinkler system shall be tested in accordance with Section 11.4.

11.1.3 The installing contractor shall complete and sign the appropriate contractor's material and test certificate(s) as shown in Figure 11.1.3(a) and Figure 11.1.3(b).

11.2 Flushing of Piping.

11.2.1 Underground piping supplying the system shall be flushed in accordance with NFPA 24, *Standard for the Installation of Private Fire Service Mains and Their Appurtenances.*

11.2.2 Piping between the fire department connection and the check valve in the inlet pipe shall be flushed with a sufficient volume of water in order to remove any construction debris and trash accumulated in the piping prior to the completion of the system and prior to the installation of the fire department connection.

11.3 Hose Threads.

11.3.1 All hose connection and fire department connection threads shall be tested to verify their compatibility with threads used by the local fire department.

11.3.2 The test shall consist of threading coupling samples, caps, or plugs onto the installed devices.

11.4 Hydrostatic Tests.

11.4.1* General. All new systems, including yard piping and fire department connections, shall be tested hydrostatically at not less than 200 psi (13.8 bar) of pressure for 2 hours, or at 50 psi (3.5 bar) in excess of the maximum pressure where the maximum pressure is in excess of 150 psi (10.3 bar).

11.4.2 The hydrostatic test pressure shall be measured at the low elevation point of the individual system or zone being tested.

11.4.3 The standpipe system piping shall show no leakage other than as permitted by NFPA 24, *Standard for the Installation of Private Fire Service Mains and Their Appurtenances.*

11.4.4 Underground pipe shall be tested in accordance with NFPA 24, *Standard for the Installation of Private Fire Service Mains and Their Appurtenances.*

11.4.5 Where cold weather prevents testing with water, an interim air test shall be permitted to be conducted prior to the standard hydrostatic test.

11.4.5.1 An air pressure leakage test at 40 psi (2.8 bar) shall be conducted for 24 hours.

11.4.5.2 Any leakage that results in a loss of pressure in excess of 1½ psi (0.1 bar) during a continuous 24-hour period shall be corrected.

11.4.6 Fire Department Connection. Piping between the fire department connection and the check valve in the inlet pipe shall be tested hydrostatically in the same manner as the balance of the system.

11.4.7 Existing Systems. Where an existing standpipe system, including yard piping and fire department connection, is modified, the new piping shall be tested in accordance with 11.4.1.

11.4.8 Protection from Freezing. During testing, care shall be taken to ensure that no portion of the piping is subject to freezing during cold weather.

11.4.9 Gauges. During the hydrostatic test, the pressure gauge at the top of each standpipe shall be observed and the pressure recorded.

11.4.10 Water Additives. Additives, corrosive chemicals such as sodium silicate or derivatives of sodium silicate, brine, or other chemicals, shall not be used while hydrostatically testing systems or for stopping leaks.

11.5 Flow Tests.

11.5.1* The standpipe system shall be tested to verify system demand.

Copyright National Fire Protection Association
Provided by IHS under license with NFPA
No reproduction or networking permitted without license from IHS
Not for Resale

CONTRACTOR'S MATERIAL AND TEST CERTIFICATE FOR ABOVEGROUND PIPING

Standpipe System NFPA 14

PROCEDURE

Upon completion of work, inspection and tests shall be made by the contractor's representative and witnessed by an owner's representative. All defects shall be corrected and the system left in service before the contractor's personnel finally leave the job.

A certificate shall be filled out and signed by both representatives. Copies shall be prepared for approving authorities, owners, and contractor. It is understood that the owner's representative's signature in no way prejudices any claim against the contractor for faulty material, poor workmanship, or failure to comply with the approving authority's requirements or local ordinances.

Property name		Date
Property address		
Plans	Accepted by approving authorities (names)	
	Address	
	Installation conforms to accepted plans?	❑ Yes ❑ No
	Equipment used is approved or listed?	❑ Yes ❑ No
	If no, explain deviations. _____	
Type of System	Automatic dry	❑ Yes
	Automatic wet	❑ Yes
	Semiautomatic dry	❑ Yes
	Manual dry	❑ Yes
	Manual wet	❑ Yes
	Combination standpipe/sprinkler	❑ Yes
	If other, explain. _____	
Water Supply Data Used for Design and As Shown on Plans	Fire pump data Manufacturer _____ Model _____ Type: ❑ Electric ❑ Diesel ❑ Other (explain) _____ Rated, gpm _____ Rated, psi _____ Shutoff, psi _____	
Water Supply Source Capacity, Gallons	❑ Public waterworks system ❑ Storage tank ❑ Gravity tank ❑ Open reservoir ❑ Other (explain) _____	
If Public Waterworks System:	Static, psi _____ Residual, psi _____ Flow, gpm _____	
Have Copies of the Following Been Left on the Premises?	❑ System components instructions ❑ Care and maintenance of system ❑ NFPA 25 ❑ Copy of accepted plans ❑ Hydraulic data/calculations	
Supplies Building(s)	Main waterflow shutoff location _____ Number of standpipe risers _____ Do all standpipe risers have base of riser shutoff valves?	❑ Yes ❑ No
Valve Supervision	❑ Locked open ❑ Sealed and tagged ❑ Tamperproof switch ❑ Other If other, explain. _____	
Pipe and Fittings	Type of pipe _____ Type of fittings _____	
Hose Threads	Hose threads have been verfied for compliance with local fire department	❑ Yes ❑ No
Backflow Preventor	❑ Double check assembly ❑ Reduced-pressure device Size _____ Make and model _____	

© 2006 National Fire Protection Association

FIGURE 11.1.3(a) Sample Contractor's Material and Test Certificate for Aboveground Piping.

Copyright National Fire Protection Association
Provided by IHS under license with NFPA
No reproduction or networking permitted without license from IHS
Not for Resale

CONTROL VALVE DEVICE

Type	Size	Make	Model

Time to trip through remote hose valve _____ Min _____ Sec Water pressure _____ Air pressure _____
Time water reached remote hose valve outlet _____ Min _____ Sec Trip point air pressure _____ psi
Alarm operated properly? ❑ Yes ❑ No If no, explain. _____

Time water reached remote hose valve outlet _____ Min _____ Sec
Hydraulic activation ❑ Yes
Electric activation ❑ Yes
Pneumatic activation ❑ Yes
Make and model of activation device _____
Each activation device tested? ❑ Yes ❑ No If no, explain. _____

Each activation device operated properly? ❑ Yes ❑ No If no, explain. _____

PRESSURE-REGULATING DEVICE

Location & Floor	Model	Nonflowing (psi)		Flowing (psi)		gpm
		Inlet	Outlet	Inlet	Outlet	

All hose valves on system operated properly? ❑ Yes ❑ No If no, explain. _____

© 2006 National Fire Protection Association

FIGURE 11.1.3(a) ***Continued***

Copyright National Fire Protection Association
Provided by IHS under license with NFPA
No reproduction or networking permitted without license from IHS
Not for Resale

Test Description	*Hydrostatic:* Hydrostatic tests shall be made at not less than 200 psi (13.6 bar) for 2 hours or 50 psi (3.4 bar) above static pressure in excess of 150 psi (10.2 bar) for 2 hours. Differential dry pipe valve clappers shall be left open during test to prevent damage. All aboveground piping leakage shall be stopped. *Pneumatic:* Establish 40 psi (2.7 bar) air pressure and measure drop, which shall not exceed 1½ psi (0.1 bar) in 24 hours. Test pressure tanks at normal water level and air pressure and measure air pressure drop, which shall not exceed 1½ psi (0.1 bar) in 24 hours.
Tests	All piping hydrostatically tested at _____ psi (____ bar) for _____ hrs Dry piping pneumatically tested? ❑ Yes ❑ No Equipment operates properly? ❑ Yes ❑ No If no, state reason. Do you certify as the standpipe contractor that additives and corrosive chemicals, sodium silicate, or derivatives of sodium silicate, brine, or other corrosive chemicals were not used for testing systems or stopping leaks? ❑ Yes ❑ No Drain test: Reading of gauge located near water supply test connection _____ psi (____ bar); Residual pressure with valve in test connection open wide _____ psi (____ bar) Underground mains and lead-in connections to system risers flushed before connection made to standpipe piping. Verified by copy of the U form no. 85b? ❑ Yes ❑ No ❑ Other (explain) _____ Flushed by installer of underground standpipe piping? ❑ Yes ❑ No _____
Blank Testing	Number used _____ Locations _____ Number removed _____
Welding	Welded piping ❑ Yes ❑ No **If yes . . .** Do you certify as the standpipe contractor that welding procedures comply with the requirements of at least AWS D10.9, Level AR-3? ❑ Yes ❑ No Do you certify that the welding was performed by welders qualified in compliance with the requirements of at least AWS D10.9, Level AR-3? ❑ Yes ❑ No Do you certify that welding was carried out in compliance with a documented quality control procedure to ensure that all discs are retrieved, that openings in piping are smooth, that slag and other welding residue are removed, and that the internal diameters of piping are not penetrated? ❑ Yes ❑ No
Cutouts (Discs)	Do you certify that you have a control feature to ensure that all cutouts (discs) are retrieved? ❑ Yes ❑ No
Hydraulic Data Nameplate	Nameplate provided? ❑ Yes ❑ No ❑ If no, explain. _____
Remarks	Date left in service with all control valves open: _____
Name of Sprinkler/ Standpipe Contractor	Name of contractor _____ Address _____ State license number (if applicable) _____
System Operating Test Witnessed by	Property owner _____ Title _____ Date _____ Sprinkler/standpipe contractor _____ Title _____ Date _____ Approving authorities _____ Title _____ Date _____
Additional Explanation and Notes	

© 2006 National Fire Protection Association

FIGURE 11.1.3(a) ***Continued***

--`,,```,,,,````-`-`,,`,,`,`,,`---

Copyright National Fire Protection Association
Provided by IHS under license with NFPA
No reproduction or networking permitted without license from IHS
Not for Resale

CONTRACTOR'S MATERIAL AND TEST CERTIFICATE FOR UNDERGROUND PIPING

PROCEDURE

Upon completion of work, inspection and tests shall be made by the contractor's representative and witnessed by an owner's representative. All defects shall be corrected and the system left in service before the contractor's personnel finally leave the job.

A certificate shall be filled out and signed by both representatives. Copies shall be prepared for approving authorities, owners, and contractor. It is understood that the owner's representative's signature in no way prejudices any claim against the contractor for faulty material, poor workmanship, or failure to comply with the approving authority's requirements or local ordinances.

Property name		Date
Property address		
Plans	Accepted by approving authorities (names)	
	Address	
	Installation conforms to accepted plans? ❑ Yes ❑ No Equipment used is approved? ❑ Yes ❑ No If no, state deviations. _____	
Instructions	Has person in charge of fire equipment been instructed as to the location of control valves and care and maintenance of this new equipment? ❑ Yes ❑ No If no, explain. _____	
	Have copies of appropriate instructions and care and maintenance charts been left on premises? ❑ Yes ❑ No If no, explain. _____	
Location	Supplies buildings	
Underground Pipes and Joints	Pipe types and class	Type joint
	Pipe conforms to _____ standard ❑ Yes ❑ No Fittings conform to _____ standard ❑ Yes ❑ No If no, explain. _____	
	Joints needing anchorage clamped, strapped, or blocked in accordance with _____ standard ❑ Yes ❑ No If no, explain. _____	
Test Description	*Flushing:* Flow the required rate until water is clear, as indicated by no collection of foreign material in burlap bags at outlets such as hydrants and blow-offs. Flush at flows not less than 390 gpm (1476 L/min) for 4 in. (100 mm) pipe, 880 gpm (3331 L/min) for 6 in. (150 mm) pipe, 1560 gpm (5905 L/min) for 8 in. (200 mm) pipe, 2440 gpm (9235 L/min) for 10 in. (250 mm) pipe, and 3520 gpm (13,323 L/min) for 12 in. (300 mm) pipe. When supply cannot produce stipulated flow rates, obtain maximum available. *Hydrostatic:* Hydrostatic tests shall be made at not less than 200 psi (13.8 bar) for 2 hours or 50 psi (3.4 bar) above static pressure in excess of 150 psi (10.3 bar) for 2 hours. *Leakage:* New pipe laid with rubber gasketed joints shall, if the workmanship is satisfactory, have little or no leakage at the joints. The amount of leakage at the joints shall not exceed 2 qt/hr (1.89 L/hr) per 100 joints, irrespective of pipe diameter. The leakage shall be distributed over all joints. If such leakage occurs at a few joints, the installation shall be considered unsatisfactory and necessary repairs made. The amount of allowable leakage specified above can be increased by 1 fl oz per in. valve diameter per hr (30 mL/25 mm/hr) for each metal seated valve isolating the test section. If dry barrel hydrants are tested with the main valve open, so that the hydrants are under pressure, an additional 5 oz/min (150 mL/min) leakage is permitted for each hydrant.	
Flushing Tests	New underground piping system flushed according to _____ standard by (company) ❑ Yes ❑ No If no, explain. _____	
	How flushing flow was obtained ❑ Public water ❑ Tank or reservoir ❑ Fire pump	Through what type of opening ❑ Hydrant butt ❑ Open pipe
	Lead-ins flushed according to _____ standard by (company) ❑ Yes ❑ No If no, explain. _____	
	How flushing flow was obtained ❑ Public water ❑ Tank or reservoir ❑ Fire pump	Through what type of opening ❑ Y conn. to flange & spigot ❑ Open pipe

© 2006 National Fire Protection Association NFPA 14 (p. 1 of 2)

FIGURE 11.1.3(b) Sample Contractor's Material and Test Certificate for Underground Piping.

--`,,```,,,,````-`-`,,`,,`,`,,`---
Copyright National Fire Protection Association
Provided by IHS under license with NFPA
No reproduction or networking permitted without license from IHS
Not for Resale

Hydrostatic Test	All new underground piping hydrostatically tested at _____ psi for _____ hours		Joints covered ❑ Yes ❑ No
Leakage Test	Total amount of leakage measured _____ gal _____ hours		
	Allowable leakage _____ gal _____ hours		
Hydrants	Number installed	Type and make	All operate satisfactorily ❑ Yes ❑ No
Control Valves	Water control valves left wide open? ❑ Yes ❑ No If no, explain. _____		
	Hose threads of fire department connections and hydrants interchangeable with those of fire department answering alarm ❑ Yes ❑ No		
Remarks	Date left in service _____		
Signatures	Name of installing contractor		
	Tests Witnessed By		
	For property owner (signed)	Title	Date
	For installing contractor (signed)	Title	Date
Additional Explanation and Notes			

© 2006 National Fire Protection Association NFPA 14 (p. 2 of 2)

FIGURE 11.1.3(b) ***Continued***

Copyright National Fire Protection Association
Provided by IHS under license with NFPA
No reproduction or networking permitted without license from IHS
Not for Resale

11.5.1.1 This test shall be conducted by flowing water simultaneously from the outlet(s) indicated in the approved hydraulic calculations of each standpipe as required by Sections 7.8 and 7.10.

11.5.2 For a manual standpipe, a fire department pumper or portable pump of a capacity to provide required flow and pressure shall be used to verify the system design by pumping into the fire department connection.

11.5.3 The filling arrangement for suction tanks shall be verified by shutting down all supplies to the tank, draining the tank to below the designated low water level, and then opening the supply valve to ensure operation of its automatic features.

11.5.4 Pressure-Regulating Devices.

11.5.4.1* Each pressure-regulating device shall be tested to verify that the installation is correct, that the device is operating, and that the inlet and outlet pressures and flow at the device are in accordance with the design.

11.5.4.2 Static and residual inlet pressure and static and residual outlet pressure and flow shall be recorded on the contractor's test certificate.

11.5.5 Main Drain Flow Test.

11.5.5.1 The main drain valve shall be opened and shall remain open until the system pressure stabilizes.

11.5.5.2 The static and residual pressure shall be recorded on the contractor's test certificate.

11.5.6 Testing of Automatic Dry and Semiautomatic Systems.

11.5.6.1 Automatic dry and semiautomatic systems shall be tested by initiating a flow of water from the hydraulically most remote hose connection.

11.5.6.2 The system shall deliver a minimum of 250 gpm (946 L/min) at the hose connection within 3 minutes of opening the hose valve if the system capacity exceeds 750 gal (2480 L).

11.5.6.3 Each remote control activation device for operating a semiautomatic system shall be tested in accordance with the manufacturer's specifications and instructions.

11.5.6.4 In addition the standard hydrostatic test, an air pressure leakage test at 40 psi (2.8 bar) shall be conducted for 24 hours. Any leakage that results in a loss of pressure in excess of 1½ psi (0.1 bar) for the 24 hours shall be corrected. [**13:**24.2.2]

11.5.6.5 These tests shall be conducted in addition to all the tests required for automatic and manual systems.

11.5.7 Where pumps are part of the water supply for a standpipe system, testing shall be conducted while the pumps are operating.

11.6 Manual Valve Test.

11.6.1 Each valve intended to be manually opened or closed shall be operated by turning the handwheel crank or wrench for its full range and returning it to its normal position.

11.6.2 Hose valve caps shall be tightened sufficiently to avoid leaking during the test and removed after the test to drain water and relieve pressure.

11.7 Alarm and Supervision Tests. Each alarm and supervisory device provided shall be tested in accordance with *NFPA 72, National Fire Alarm Code*.

11.8 Instructions. The installing contractor shall provide the owner with the following:

(1) All literature and instructions provided by the manufacturer describing the operation and maintenance of equipment and devices installed
(2) A copy of NFPA 25, *Standard for the Inspection, Testing, and Maintenance of Water-Based Fire Protection Systems*

11.9 Signs. The installation of signs required by this standard shall be verified.

Chapter 12 Buildings Under Construction

12.1 General. Where required by the authority having jurisdiction, a standpipe system, either temporary or permanent, shall be provided in accordance with this chapter in buildings under construction.

12.2 Fire Department Connections. The standpipes shall be provided with conspicuously marked and readily accessible fire department connections on the outside of the building at the street level, at a location approved by the local fire department.

12.3 Other System Features. Pipe sizes, hose connections, hose, water supply, and other details for new construction shall be in accordance with this standard.

12.4 Support of Piping. Standpipes shall be supported and restrained at each alternate floor.

12.5* Hose Connections.

12.5.1 At least one hose connection shall be provided at each floor level, at a location approved by the local fire department.

12.5.2 Hose valves shall be kept closed at all times and guarded against mechanical injury.

12.6* Extension of System Piping. Standpipes shall be extended upward for each story and capped at the top.

12.7 Temporary Installations.

12.7.1 Temporary standpipes shall remain in service until the permanent standpipe is complete.

12.7.2 Where temporary standpipes normally contain water, the piping shall be protected against freezing.

12.8 Timing of Water Supply Installation.

12.8.1 Where construction reaches a height at which public waterworks system pressure can no longer provide the required flow and pressure, temporary or permanent fire pumps shall be installed to provide protection to the uppermost level or to the height required by the authority having jurisdiction.

12.8.2 Where local fire department pumping apparatus is permitted by the authority having jurisdiction for the standpipe pressure required, temporary or permanent fire pumps shall not be required.

12.9 Protection of Hose Connections and Fire Department Connections.

12.9.1 Threaded caps and plugs shall be installed on fire department connections and hose connections.

12.9.2 Fire department connections and hose connections shall be protected against physical damage.

Copyright National Fire Protection Association
Provided by IHS under license with NFPA
No reproduction or networking permitted without license from IHS
Not for Resale

Annex A Explanatory Material

Annex A is not a part of the requirements of this NFPA document but is included for informational purposes only. This annex contains explanatory material, numbered to correspond with the applicable text paragraphs.

A.1.1.2 See NFPA 25, *Standard for the Inspection, Testing, and Maintenance of Water-Based Fire Protection Systems.*

A.3.2.1 Approved. The National Fire Protection Association does not approve, inspect, or certify any installations, procedures, equipment, or materials; nor does it approve or evaluate testing laboratories. In determining the acceptability of installations, procedures, equipment, or materials, the authority having jurisdiction may base acceptance on compliance with NFPA or other appropriate standards. In the absence of such standards, said authority may require evidence of proper installation, procedure, or use. The authority having jurisdiction may also refer to the listings or labeling practices of an organization that is concerned with product evaluations and is thus in a position to determine compliance with appropriate standards for the current production of listed items.

A.3.2.2 Authority Having Jurisdiction (AHJ). The phrase "authority having jurisdiction," or its acronym AHJ, is used in NFPA documents in a broad manner, since jurisdictions and approval agencies vary, as do their responsibilities. Where public safety is primary, the authority having jurisdiction may be a federal, state, local, or other regional department or individual such as a fire chief; fire marshal; chief of a fire prevention bureau, labor department, or health department; building official; electrical inspector; or others having statutory authority. For insurance purposes, an insurance inspection department, rating bureau, or other insurance company representative may be the authority having jurisdiction. In many circumstances, the property owner or his or her designated agent assumes the role of the authority having jurisdiction; at government installations, the commanding officer or departmental official may be the authority having jurisdiction.

A.3.2.3 Listed. The means for identifying listed equipment may vary for each organization concerned with product evaluation; some organizations do not recognize equipment as listed unless it is also labeled. The authority having jurisdiction should utilize the system employed by the listing organization to identify a listed product.

A.3.3.8 Pressure-Regulating Device. Examples include pressure-reducing valves, pressure control valves, and pressure-restricting devices.

A.3.3.12 Standpipe System. This arrangement is accomplished by means of connections to water supply systems or by means of pumps, tanks, and other equipment necessary to provide an adequate supply of water to the hose connections.

A.3.3.15 System Type. NFPA 600, *Standard on Industrial Fire Brigades*, and the Fire Equipment Manufacturers Association (FEMA) are resources for training of personnel.

A.3.3.16.4 Pressure-Reducing Valve. A pressure relief valve is not a pressure-reducing valve and should not be used as such.

A.4.1 The use of standard-weight valves and fittings ordinarily should be confined to the upper stories of very high buildings and to equipment in which the highest available pressures are less than 175 psi (12.1 bar).

A.4.4.1.2 Some steel piping material having lesser wall thickness than specified in 4.4.1.2 has been listed for use in sprinkler systems where joined with threaded connections. The service life of such products can be significantly less than that of Schedule 40 steel pipe, and it should be determined if this service life will be sufficient for the application intended.

All such threads should be checked by the installer using working ring gauges conforming to the "Basic Dimensions of Ring Gauges for USA (American) Standard Taper Pipe Threads, NPT," as per Table 8 of ASME B1.20.1, *Pipe Threads, General Purpose (Inch).* [**13:** A.6.5.1.2]

A.4.4.2.2 Cutting and welding operations account for 4 percent of fires each year in nonresidential properties and 8 percent in industrial and manufacturing properties. In-place welding of sprinkler piping introduces a significant hazard that can normally be avoided by shop-welding the piping and installing the welded sections with mechanical fittings. As a result, the standard requires that all piping be shop-welded. When such situations cannot be avoided, the exceptions outline procedures and practices that minimize the increase in hazard. *(See Figure A.4.4.2.2.)* [**13:** A.6.5.2.2]

A.4.4.2.3.1 Listed, shaped, and contoured nipples meet the definition of fabricated fittings. [**13:** A.6.5.2.3.1]

A.4.4.2.4.1 Partial penetration welds on outlet fitting connections are considered adequate, since there is no significant load on the joint other than that caused by pressure internal to the pipe *(see Figure A.4.4.2.4.1)*. The load due to the internal pressure can be accommodated with a weld that has a conservative weld throat thickness that can be calculated as follows:

$$\text{Weld throat thickness (in.)} = PD \times 0.000035$$

where:
P = rated system pressure (psig)
D = Outside diameter of the fitting (in.)

For example: If you assume a pressure of 300 psig and the OD of the outlet fitting of 3 in., the result of the thickness calculation is 0.0315 in. When compared to the minimum throat thickness of 3⁄16 in. (0.18 in.), there is a factor of more than 5 times the calculated thickness value. [**13:** A.6.5.2.4.1]

A.4.4.2.4.2 The preparation of mating surfaces is important to the proper fabrication of a weld joint. To accomplish this, the mating surfaces should be prepared and configured so that a full penetration weld is achievable, but a partial penetration weld is acceptable. [**13:** A.6.5.2.4.2]

A.4.4.4 The fire hazard of the brazing and soldering processes should be suitably safeguarded. [**13:** A.6.5.4]

A.4.4.4.5 Soldering fluxes manufactured to the specifications required by Table 6.3.1.1 of NFPA 13 are unlikely to cause damage to the seats of sprinklers. When brazing flux is used, it must be of a type not likely to damage the seats of sprinklers. [**13:** A.6.5.4.5]

A.4.6.2.1 One method of determining adequately trained personnel is described in NFPA 600, *Standard on Industrial Fire Brigades.*

A.4.6.5 One method of determining adequately trained personnel is described in NFPA 600, *Standard on Industrial Fire Brigades.*

A.5.1.2 Design of standpipe systems should include consideration of local fire department suppression tactics, hose size, hose length, and types of nozzles used.

Copyright National Fire Protection Association
Provided by IHS under license with NFPA
No reproduction or networking permitted without license from IHS
Not for Resale

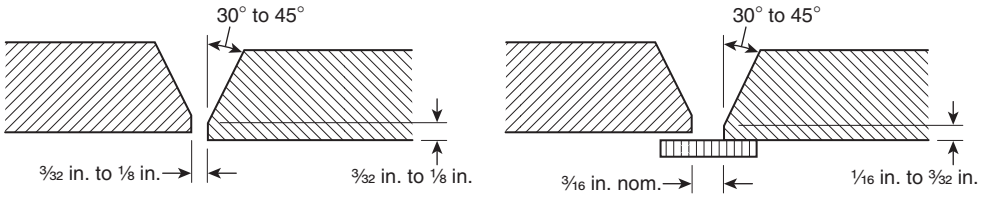

FIGURE A.4.4.2.2 Weld Diagram.

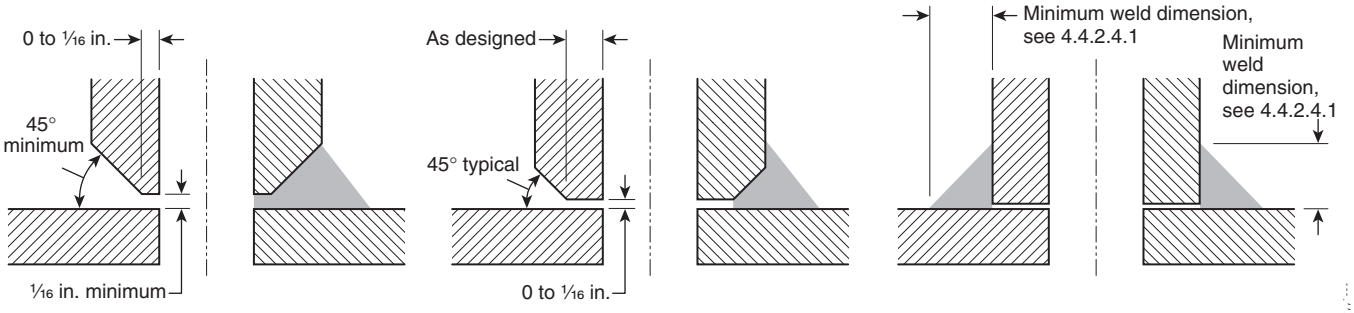

FIGURE A.4.4.2.4.1 Weld Descriptions.

A.5.2.1 A dry pipe system should be installed only where heat is not adequate to prevent freezing of water in all parts of, or in sections of, the system. [**13:** A.7.2]

A.5.2.1.3.1 The capacities of the various sizes of pipe given in Table A.5.2.1.3.1 are for convenience in calculating the capacity of a system. [**13:** A.7.2.3]

Table A.5.2.1.3.1 Capacity of 1 Foot of Pipe (Based on Actual Internal Pipe Diameter)

Nominal Pipe Diameter (in.)	Pipe	
	Schedule 40 (gal)	Schedule 10 (gal)
¾	0.028	
1	0.045	0.049
1¼	0.078	0.085
1½	0.106	0.115
2	0.174	0.190
2½	0.248	0.283
3	0.383	0.433
3½	0.513	0.576
4	0.660	0.740
5	1.040	1.144
6	1.501	1.649[b]
8	2.66[a]	2.776[c]

For SI units, 1 in. = 25.4 mm; 1 ft = 0.3048 m; 1 gal = 3.785 L.
[a] Schedule 30.
[b] 0.134 wall pipe.
[c] 0.188 wall pipe.
[**13:** Table A.7.2.3]

A.5.2.1.4 The dry pipe valve should be located in an accessible place near the system it controls. Where exposed to cold, the dry pipe valve should be located in a valve room or enclosure of adequate size to properly service equipment. [**13:** A.7.2.5]

A.5.2.1.4.1 The dry pipe valve and supply piping should be in an area maintained at or above 40°F (4°C). It is the intent of the committee to protect the valves from freezing. The occasional exposure of valves to short exposures of air temperatures below 40°F (4°C) that would not cause the valves to freeze does not justify the construction of a valve room. [**13:** A.7.2.5.1]

A.5.2.1.5.2 The compressor should draw its air supply from within the operating criteria allowed by the manufacturer of the compressor. Air piping should not be attached to the intake of the compressor unless acceptable to the compressor manufacturer. Damage, air reduction, or reduced life expectancy can result if guidelines are not followed. [**13:** A.7.2.6.2]

A.5.2.3.1.3 Remote control activation circuits should not be placed in unsprinklered areas of combustible construction.

A.5.2.3.4 Conditions of occupancy or special hazards might require quick application of large quantities of water, and, in such cases, deluge systems might be needed.

Fire detection devices should be selected to assure operation, yet guard against premature operation of sprinklers based on normal room temperatures and draft conditions.

In locations where ambient temperature at the ceiling is high from heat sources other than fire conditions, heat-responsive devices that operate at higher than ordinary temperature and that are capable of withstanding the normal high temperature for long periods of time should be selected.

Where corrosive conditions exist, materials or protective coatings that resist corrosion should be used. [**13:** A.7.3.1]

Copyright National Fire Protection Association
Provided by IHS under license with NFPA
No reproduction or networking permitted without license from IHS
Not for Resale

A.5.2.4 Manual dry standpipe systems need water from a fire department pumper (or the like) to be pumped into the system through the fire department connection in order to supply the system demand.

A.5.2.5 Manual wet standpipe systems need water from a fire department pumper (or the like) to be pumped into the system in order to supply the system demand.

A.5.4 The committee's intent is to permit the omission of a fire pump as part of the standpipe system in non-high-rise buildings when the automatic sprinkler system can be designed and installed with the available water supply and the flow and pressure demands of the standpipe system can be provided by the fire department apparatus through the fire department connection.

A.5.5 Additional pressure gauges located at the base of the standpipes could be desirable in some equipment, particularly in large plants and high-rise buildings.

A.5.6 Audible alarms are normally located on the outside of the building. Approved electric gong bells, horns, or sirens located inside the building, or both inside and outside, are sometimes advisable.

A.6.1 Connections from fire pumps and sources outside the building should be made at the base of the standpipes.

A.6.1.2.1 Standpipes should not be placed in unsprinklered areas of combustible construction.

A.6.3.5 See Figure A.6.3.5(a) and Figure A.6.3.5(b).

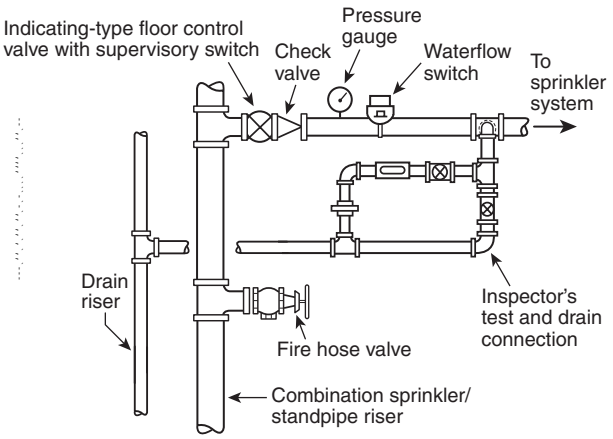

FIGURE A.6.3.5(a) Acceptable Piping Arrangement for Combined Sprinkler/Standpipe System.

A.6.3.6.1.1 A water supply connection should not extend into a building or through a building wall unless such connection is under the control of an outside listed indicating valve or an inside listed indicating valve located near the outside wall of the building.

All valves controlling water supplies for standpipe systems or portions thereof, including floor control valves to sprinkler systems and standpipe isolation valves, should be accessible to authorized persons during emergencies. Permanent ladders, clamped treads on risers, chain-operated hand wheels, or other accepted means should be provided where necessary.

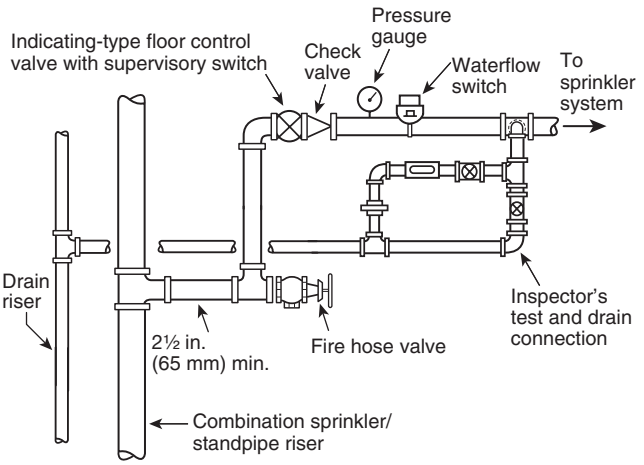

FIGURE A.6.3.5(b) Combined Sprinkler/Standpipe System.

Outside control valves are suggested in the following order of preference:

(1) Listed indicating valves at each connection into the building at least 40 ft (12.2 m) from buildings if space permits
(2) Control valves installed in a cutoff stair tower or valve room accessible from outside
(3) Valves located in risers with indicating posts arranged for outside operation
(4) Key-operated valves in each connection into the building

A.6.3.6.2 See NFPA 24, *Standard for the Installation of Private Fire Service Mains and Their Appurtenances.*

A.6.3.8.5 Depending on the arrangement of the hose connection in a corridor or large area, it can be preferable to mount hose connection identification signs either parallel, perpendicular, or at an angle to the plane of the mounting surface on which the sign is located.

A.6.4 See Figure A.6.4 for general arrangement.

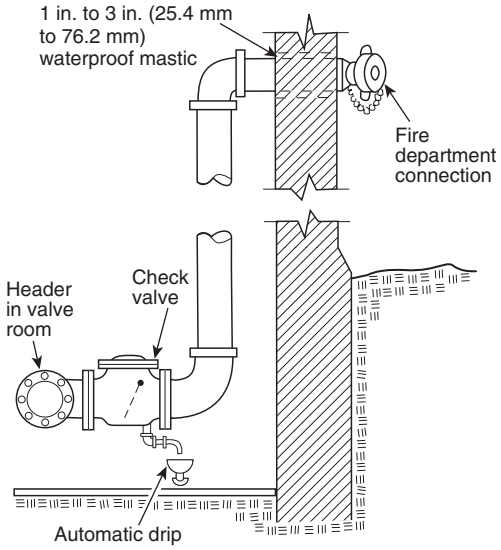

FIGURE A.6.4 Typical Fire Department Connection for Wet Standpipes.

Copyright National Fire Protection Association
Provided by IHS under license with NFPA
No reproduction or networking permitted without license from IHS
Not for Resale

A.6.4.5.4 The system designer should contact the authority having jurisdiction prior to establishing the location of the fire department connection. The location should be based on the requirements of the fire department.

A.6.8 See Figure A.6.8 for sample hydraulic information sign.

Location of the two hydraulically most remote hose connections: _____

Design flow rate for the connections identified above: _____

Design residual inlet and outlet pressures for the connections identified above: _____

Design static pressure and design system demand (i.e., flow and residual pressure) at the system control valve, or at the pump discharge flange where a pump is installed, and at each fire department connection: _____

FIGURE A.6.8 System Hydraulic Information Sign.

A.7.1 The building height determines the number of vertical zones. The area of a floor or fire area and exit locations, as well as the occupancy classification, determines the number and locations of hose connections. Local building codes influence types of systems, classes of systems, and locations of hose connections. Pipe sizing is dependent on the number of hose connections flowing, the quantity of water flowed, the required residual pressure, and the vertical distance and horizontal distance of those hose connections from the water supplies.

For typical elevation drawings, see Figure A.7.1(a), Figure A.7.1(b), and Figure A.7.1(c). See Chapter 7 for general system requirements.

A.7.1.1 It is important to determine the exact operating range to ensure that pressure-regulating devices function in accordance with the manufacturer's instructions for both maximum and minimum anticipated flow rates. Minimum flow can be from a single sprinkler for combined systems or flow from a 1½ in. (40 mm) hose connection on standpipe systems that do not supply sprinklers. This could require the use of two devices installed in parallel.

A.7.2 The system pressure limits have been implemented to replace the former height units. Because the issue addressed by the height limits has always been maximum pressure, pressure limitations are a more direct method of regulation and allow flexibility in height units where pumps are used, because a pump curve with less excess pressure at churn yields lower maximum system pressures while achieving the required system demand.

The maximum system pressure normally is at pump churn. The measurement should include both the pump boost and city static pressures. The 350 psi (24 bar) limit was selected because it is the maximum pressure at which most system components are available, and it recognizes the need for a reasonable pressure unit.

A.7.2.2 A small diameter pressure-reducing device can be required to accommodate low flow conditions such as those created by the flow of a single sprinkler.

See Figure A.7.2.2(a) and Figure A.7.2.2(b) for methods to comply with this section.

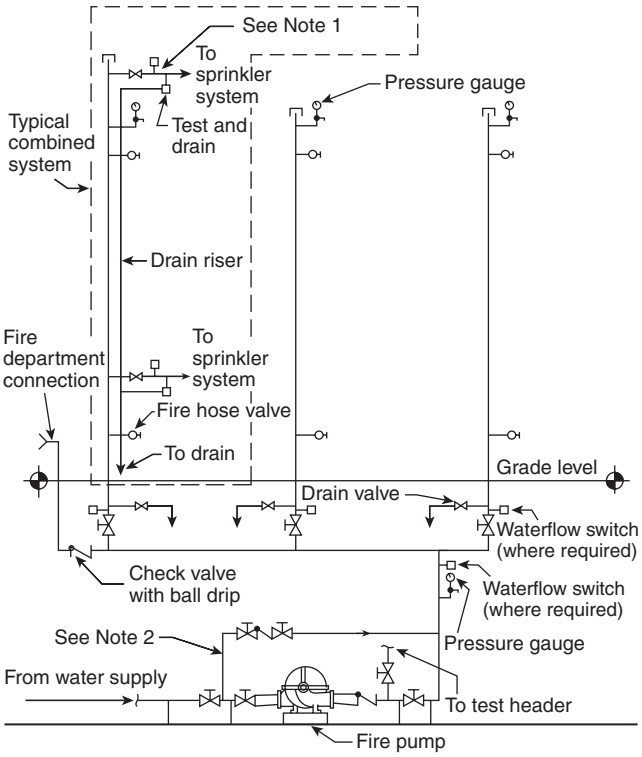

Notes:
1. Sprinkler floor assembly in accordance with NFPA 13, *Standard for the Installation of Sprinkler Systems*.
2. Bypass in accordance with NFPA 20, *Standard for the Installation of Stationary Pumps for Fire Protection.*

FIGURE A.7.1(a) Typical Single-Zone System.

A.7.3.1 Hose can be permitted to be located at one side of the standpipe and supplied by short lateral connections to the standpipe where necessary to avoid obstructions.

Hose connections for Class I systems should be located in a stairway enclosure, and connections for Class II systems should be located in the corridor or space adjacent to the stairway enclosure and connected through the wall to the standpipe. For Class III systems, the connections for 2½ in. (65 mm) hose should be located in a stairway enclosure, and Class II connections should be located in the corridor or space adjacent to the stairway enclosure. These arrangements make it possible to use Class II system hose streams promptly in case the stairway is filled with people who are escaping at the time of fire. In buildings having large areas, connections for Class I and Class III systems can be located at interior columns.

A.7.3.2 Hose connections are now specified to be located at intermediate landings between floors to prevent congestion at doorways. Where there are multiple intermediate floor landings between floors, hose connections should be located at the landing approximately midway between floors. It is recognized that fire departments often use the hose connection on the floor below the fire floor, and the location of hose connections at intermediate landings also reduces the hose lay distance in such cases.

The approach to locating hose connections with respect to exits is shown in Figure A.7.3.2(a), Figure A.7.3.2(b), and Figure A.7.3.2(c).

Copyright National Fire Protection Association
Provided by IHS under license with NFPA
No reproduction or networking permitted without license from IHS
Not for Resale

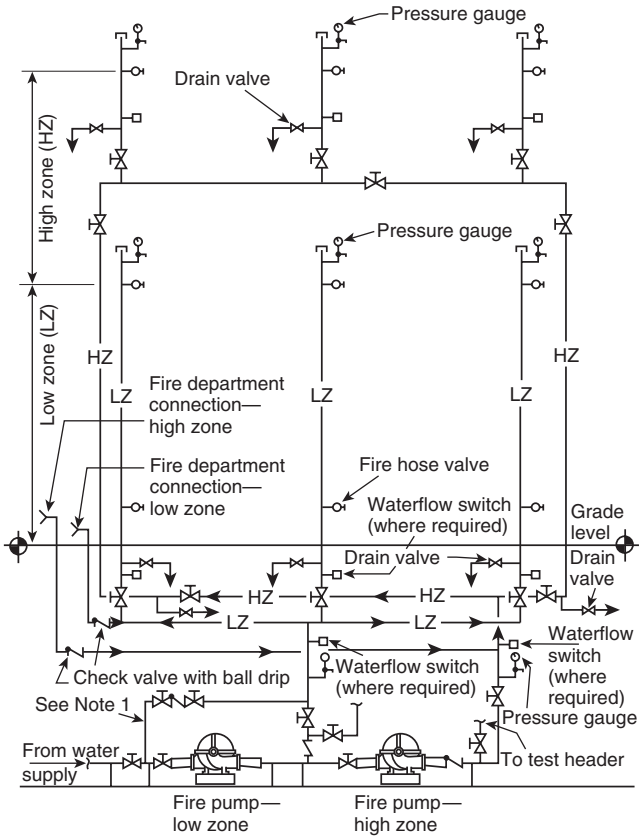

Notes:
1. Bypass in accordance with NFPA 20, *Standard for the Installation of Stationary Pumps for Fire Protection.*
2. High zone pump can be arranged to take suction directly from source of supply.

FIGURE A.7.1(b) Typical Two-Zone System.

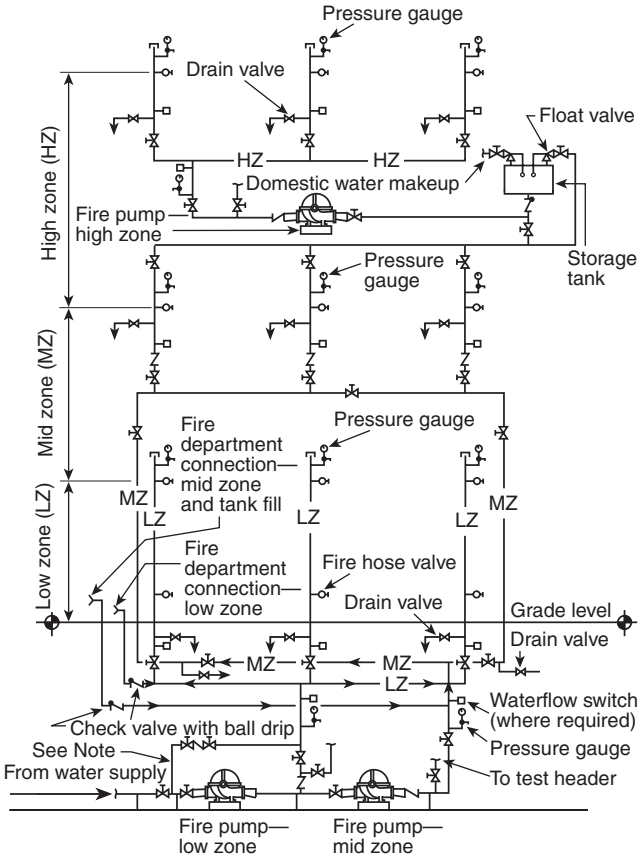

Note: Bypass in accordance with NFPA 20, *Standard for the Installation of Stationary Pumps for Fire Protection.*

FIGURE A.7.1(c) Typical Multizone System.

A.7.3.2(5) See Figure A.7.3.2(d) for an example of roof outlets.

A.7.3.2.3 Paragraph 7.3.2.3 is intended to provide local fire departments with the authority to require additional hose connections outside of or away from a 2-hour fire-resistive separation. These additional hose connections could be needed to allow fire fighters to attach a fire hose in a reasonable time frame, based on the lengths of hose available on fire department standpipe packs or in carry bags. While it is recognized that outlet spacing limitations provide controls to limit the maximum hose length needed to fight a fire, thereby minimizing the physical demands on fire fighters, it is also recognized that, in some cases, based on architectural layout, additional outlets could be needed in open floor areas in order to meet spacing requirements. In such cases, such outlets are unlikely to be utilized, since there would not be a staging area for fire fighters to use when accessing the hose connection. Therefore, additional hose connections, where provided to meet distance requirements, would be located in 1-hour fire-resistive exit corridors wherever possible to provide a degree of protection for fire fighters accessing the connection. Such connections also should be located as uniformly as possible from floor to floor so that fire fighters can find them easily during a fire.

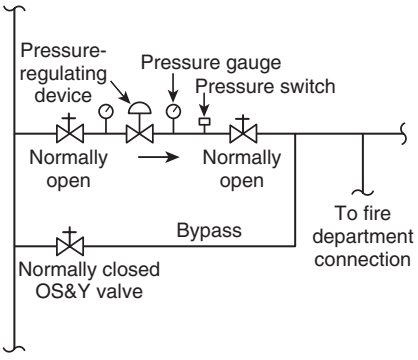

FIGURE A.7.2.2(a) Pressure-Regulating Device Arrangement.

The 200 ft (61 m) distance allowed for sprinklered buildings could necessitate additional hose lengths in order to reach the most remote portion of a floor; however, automatic sprinklers should provide adequate control to allow time for fire fighters to extend hoses in those cases where a fire is located in the most remote area.

A.7.3.3 Hose stations should be so arranged as to allow discharge to be directed from the nozzle into all portions of important enclosures such as closets and similar enclosures.

Copyright National Fire Protection Association
Provided by IHS under license with NFPA
No reproduction or networking permitted without license from IHS
Not for Resale

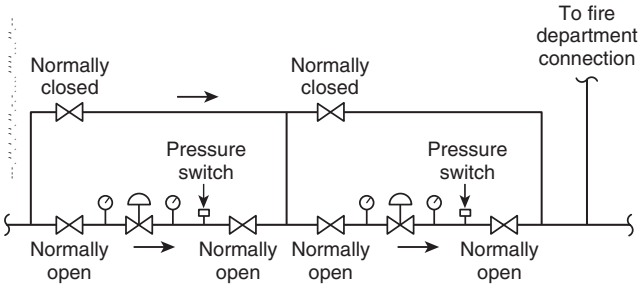

FIGURE A.7.2.2(b) Dual Pressure-Regulating Device Arrangement.

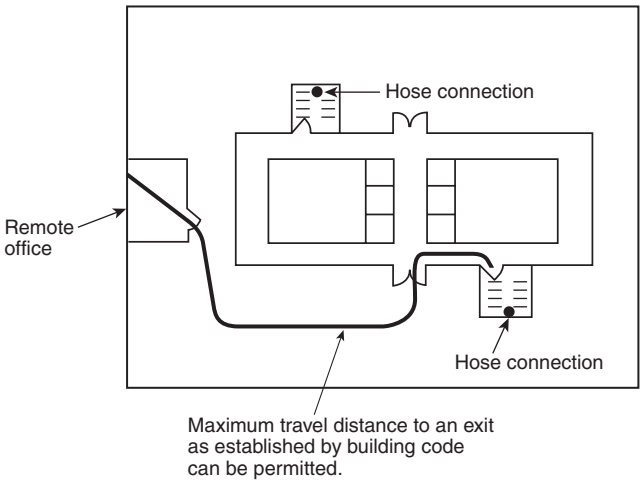

FIGURE A.7.3.2(a) Location of Hose Connections in Stairwells.

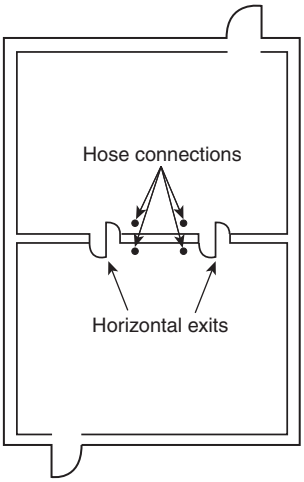

FIGURE A.7.3.2(b) Location of Hose Connections at Horizontal Exits.

A.7.5 Fire department connections feeding interconnected standpipes, including combined systems, should be arranged to supply all interconnected standpipes in a building or section of a building. See Figure A.7.1(a), Figure A.7.1(b), and Figure A.7.1(c). Interconnection should occur as close to the source of supply(ies) as possible.

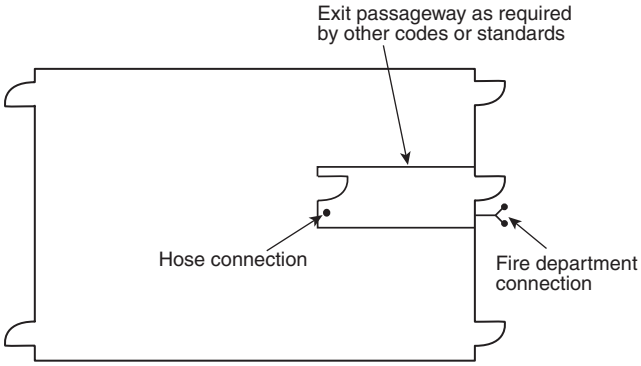

FIGURE A.7.3.2(c) Location of Hose Connections in Exit Passageways.

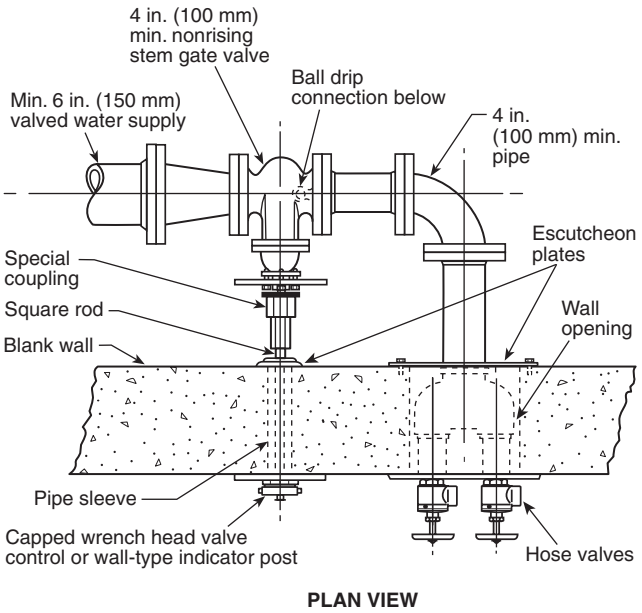

FIGURE A.7.3.2(d) Roof Outlet Piping Arrangement.

A.7.8 Where determining the pressure at the outlet of the remote hose connection, the pressure loss in the hose valve should be considered.

It is very important that fire departments choose an appropriate nozzle type for their standpipe fire-fighting operations. Constant pressure- (automatic-) type spray nozzles *(see* NFPA 1964, *Standard for Spray Nozzles)* should not be used for standpipe operations because many of these types require a minimum of 100 psi (6.9 bar) of pressure at the nozzle inlet to produce a reasonably effective fire stream. In standpipe operations, hose friction loss could prevent the delivery of 100 psi (6.9 bar) to the nozzle.

In high-rise standpipe systems with pressure-reducing hose valves, the fire department has little or no control over hose valve outlet pressure.

Many fire departments use combination (fog and straight stream) nozzles requiring 100 psi (6.9 bar) residual pressure at the nozzle inlet with 1½ in., 1¾ in., or 2 in. (40 mm, 44 mm, or 50 mm) hose in lengths of up to 150 ft (45.7 m). Some use 2½ in. (65 mm) hose with a smooth bore nozzle or a combination nozzle.

Copyright National Fire Protection Association
Provided by IHS under license with NFPA
No reproduction or networking permitted without license from IHS
Not for Resale

Some departments use 50 ft (15.2 m) of 2½ in. (65 mm) hose to a gated wye, supplying two 100 ft (30.5 m) lengths of 1½–2 in. (40–50 mm) hose with combination nozzles, requiring 120–149 psi (8.3–0.3 bar) at the valve outlet. *(See Table A.7.8.)*

Also see NFPA 1901, *Standard for Automotive Fire Apparatus.*

A.7.8.3 Due to the different pressure limitations established in Section 7.8, it could be necessary to arrange piping so that separate pressure-regulating devices can be provided on the Class I and Class II hose connections.

A.7.8.3.2 Many fire departments lay a hoseline from the pumper into the building and connect to an accessible valve outlet using a double female swivel where the building fire department connections are inaccessible or inoperable. To pressurize the standpipe, the hose valve is opened and the engine pumps into the system.

If the standpipe is equipped with pressure-reducing hose valves, the valve acts as a check valve, prohibiting pumping into the system when the valve is open.

A supplementary single-inlet fire department connection or hose valve with female threads at an accessible location on the standpipe allows pumping into that system.

A.7.10.1.1 If a water supply system supplies more than one building or more than one fire area, the total supply can be calculated based on the single building or fire area requiring the greatest number of standpipes.

For a discussion of use by the fire department of fire department connections, see NFPA 13E, *Recommended Practice for Fire Department Operations in Properties Protected by Sprinkler and Standpipe Systems.*

A.7.10.1.1.2 The intent of this section is to provide a different flow requirement for large area low-rise buildings and other structures protected by horizontal standpipes.

A.7.10.1.2 See Section 14.4 of NFPA 13, *Standard for the Installation of Sprinkler Systems.*

When performing a hydraulic design, the hydraulic characteristics of each water supply need to be known. The procedure for determining the hydraulic characteristics of permanent water supplies, such as pumps, is fairly straightforward and is described in NFPA 20, *Standard for the Installation of Stationary Pumps for Fire Protection.* The procedure for determining the hydraulic characteristics of fire apparatus supplying a standpipe system are similar. Lacking better information about local fire apparatus, a conservative design would accommodate a 1000 gpm (3785 L/min) fire department pumper performing at the level of design specifications set forth in NFPA 1901, *Standard for Automotive Fire Apparatus* (hereinafter referred to as NFPA 1901). NFPA 1901 specifies that fire department pumpers must be able to achieve three pressure/flow combinations. These are 100 percent of rated capacity at 150 psi (1034 kPa) net pump pressure, 70 percent of rated capacity at 200 psi (1379 kPa) net pump pressure, and 50 percent of rated capacity at 250 psi (1724 kPa) net pump pressure. Therefore, a 1000 gpm (3785 L/min) pumper can be expected to deliver no less than 1000 gpm (3785 L/min) at 150 psi (1034 kPa), 700 gpm (2650 L/min) at 200 psi (1379 kPa), and 500 gpm (1893 L/min) at 250 psi (1724 kPa). Residual supply pressure on the suction side of a pump from a municipal or other pressurized water supply can also be added.

To perform a hydraulic design, one should determine the minimum required pressure and flow at the hydraulically most remote hose connection and calculate this demand back through system piping to each water supply, accumulating losses for friction and elevation changes and adding flows for additional standpipes and sprinklers at each point where such standpipes or sprinklers connect to the hydraulic design path. When considering fire apparatus as a water supply, flows are calculated from system piping through the fire department connection and back through connecting hoses to the pump. If the pressure available at each supply source exceeds a standpipe system's pressure demand at the designated flow, the design is acceptable. Otherwise, the piping design or the water supply need to be adjusted.

The intent of the standard is to require that each vertical standpipe serving two or more hose connections be capable

Table A.7.8 Hose Stream Friction Losses Summary

Calculation No.	Nozzle/Hose	Valve Outlet		Flow	
		gpm	L/min	psi	bar
1	2½ in. (65 mm) combination nozzle, with 150 ft (45.7 m) of 2½ in. (65 mm) hose	250	946	123	8.5
2	Two 1½ in. (40 mm) combination nozzles with 100 ft (30.5 m) of 1½ in. (40 mm) hose per nozzle, 2½ in. (65 mm) gated wye, and 50 ft (15.2 m) of 2½ in. (65 mm) hose	250	946	149	10.3
3	Same as calculation no. 2 with two 100 ft (30.5 m) lengths of 1½ in. (40 mm) hose	250	946	139	9.6
4	Same as calculation no. 3 with two 100 ft (30.5 m) lengths of 2 in. (50 mm) hose	250	946	120	8.3
5	1½ in. (40 mm) combination nozzle with 150 ft (45.7 m) of 2 in. (50 mm) hose	200	757	136	9.4
6	Same as calculation no. 5 with 1½ in. (40 mm) hose	200	757	168	11.6

Note: For a discussion of use by the fire department of fire department connections, see NFPA 13E, *Recommended Practice for Fire Department Operations in Properties Protected by Sprinkler and Standpipe Systems.*

Copyright National Fire Protection Association
Provided by IHS under license with NFPA
No reproduction or networking permitted without license from IHS
Not for Resale

of individually flowing 500 gpm (1893 L/min) and 250 gpm (946 L/min) at each of the two hydraulically most demanding connections at the required residual pressure. Given the requirement in 7.10.1.1.4.1 for the hydraulically most remote standpipe to supply this pressure and flow rate and given the minimum standpipe sizes in Section 7.6, the ability of standpipes that are not hydraulically most remote to satisfy this requirement is implicit and should not require additional hydraulic calculations.

A.7.11 During flow testing of pressure-reducing valves, care should be taken in making connections to drain risers. An air gap should be maintained in order to prevent cross connection to nonpotable water sources.

A.7.12 See NFPA 13E, *Recommended Practice for Fire Department Operations in Properties Protected by Sprinkler and Standpipe Systems.*

The number of 2½ in. (65 mm) inlets to supply the required water volume and pressure at the fire department connection is dependent on several variables such as the performance of the water supply at the source, the distance from the source to the location of the inlets, the diameter of the hose used, the size of the fire department pumper, and the required water volume and pressure at the base of the standpipe riser(s).

A.8.1 Plans should indicate the type of fire department equipment that the system is designed to serve, including the hose size, hose length, and hose nozzle. Such equipment is the basis for the pressure selected in accordance with Section 7.8.

A.9.1 The selection of water supplies for each installation should be determined in cooperation with the authority having jurisdiction.

A.10.1 Additional benefit is derived from waterflow tests by the indication of possible deficiencies, such as tuberculation of piping, closed valves, or other obstructions, which should be corrected to provide adequate waterflows.

A.10.2 Tests should be conducted in accordance with NFPA 291, *Recommended Practice for Fire Flow Testing and Marking of Hydrants.*

A.11.1 Where standpipe connections are built into the walls or partitions, the hydrostatic tests should be made before they are covered or permanently sealed.

Example of Required Hydrostatic Test Pressure. The water supply for a standpipe system is the connection to a public water service main. A 100 psi (6.9 bar) rated pump is installed in the connection. With a maximum normal public water supply pressure of 70 psi (4.9 bar) at the low elevation point of the system or zone being tested and an 120 psi (8.3 bar) pump (churn) pressure, the hydrostatic test pressure is 70 psi + 120 psi + 50 psi, or 240 psi (4.8 bar + 8.3 bar + 3.4 bar, or 16.5 bar). *(See NFPA 24, Standard for the Installation of Private Fire Service Mains and Their Appurtenances, for permitted leakage in underground piping.)*

A.11.4.1 The testing and flushing of the underground pipe should be in accordance with NFPA 24, *Standard for the Installation of Private Fire Service Mains and Their Appurtenances.*

A.11.5.1 The hydraulically most remote hose connections in a building are generally at a roof manifold, if provided, or at the top of a stair leading to the roof. In a multizone system, the testing means is generally at a test header at grade or at a suction tank on higher floors.

Where a flow test at the hydraulically most remote hose connection is not practicable, the authority having jurisdiction should be consulted for the appropriate location of the test.

A.11.5.4.1 It is important to test pressure-regulating devices at the maximum and minimum anticipated flow rates. Minimum flow can be from a single sprinkler for combined systems or flow from a 1½ in. (40 mm) hose connection on standpipe systems that do not supply sprinklers. This can require a sustained flow to demonstrate the continued performance of the pressure-regulating device at the minimum flow rate.

A.12.5 A substantial box, preferably of metal, should be located at the highest hose connection, in which a quantity of hose sufficient to reach all parts of the floor, a 1⅛ in. (29 mm) nozzle, spanner wrenches, and hose straps should be kept.

A.12.6 Top hose connections should not be located more than one floor below the highest forms, staging, and similar combustibles at any time.

Annex B Informational References

B.1 Referenced Publications. The documents or portions thereof listed in this annex are referenced within the informational sections of this standard and are not part of the requirements of this document unless also listed in Chapter 2 for other reasons.

B.1.1 NFPA Publications. National Fire Protection Association, 1 Batterymarch Park, Quincy, MA 02169-7471.

NFPA 13, *Standard for the Installation of Sprinkler Systems*, 2007 edition.

NFPA 13E, *Recommended Practice for Fire Department Operations in Properties Protected by Sprinkler and Standpipe Systems*, 2005 edition.

NFPA 20, *Standard for the Installation of Stationary Pumps for Fire Protection*, 2007 edition.

NFPA 24, *Standard for the Installation of Private Fire Service Mains and Their Appurtenances*, 2007 edition.

NFPA 25, *Standard for the Inspection, Testing, and Maintenance of Water-Based Fire Protection Systems*, 2002 edition.

NFPA 291, *Recommended Practice for Fire Flow Testing and Marking of Hydrants*, 2002 edition.

NFPA 600, *Standard on Industrial Fire Brigades*, 2005 edition.

NFPA 1901, *Standard for Automotive Fire Apparatus*, 2003 edition.

NFPA 1964, *Standard for Spray Nozzles*, 2003 edition.

B.1.2 Other Publications.

B.1.2.1 ASME Publications. American Society for Mechanical Engineers, Three Park Avenue, New York, NY 10016-5990.

ASME B1.20.1, *Pipe Threads, General Purpose (Inch)*, 1983.

B.2 Informational References. (Reserved)

B.3 References for Extracts in Informational Sections.

NFPA 13, *Standard for the Installation of Sprinkler Systems*, 2007 edition.

Copyright National Fire Protection Association
Provided by IHS under license with NFPA
No reproduction or networking permitted without license from IHS
Not for Resale

Index

Copyright © 2006 National Fire Protection Association. All Rights Reserved.

The copyright in this index is separate and distinct from the copyright in the document that it indexes. The licensing provisions set forth for the document are not applicable to this index. This index may not be reproduced in whole or in part by any means without the express written permission of NFPA.

-A-

Acceptance, system ..... Chap. 11
Alarms
Supervisory 5.6, 6.3.7.1, 11.7, A.5.6
Testing 11.7
Waterflow 5.6, A.5.6
Approved (definition) 3.2.1, A.3.2.1
Authority having jurisdiction (definition) 3.2.2, A.3.2.2
Automatic standpipe systems
Class I 5.4.1.2, 5.4.1.3, 7.7.2
Class II and Class III 5.4.3, 7.7.2
Definition 3.3.12.1
Dry ..... *see* Dry standpipe systems
Fire department connection installation ..... 6.4.3(1), 6.4.3(2)
Flow tests 11.5.6
Waterflow alarms 5.6.1
Water supply 7.7.2, 9.1.1, 9.1.3
Wet 5.2.2

-B-

Branch lines 7.6.4
Definition 3.3.1
Buildings
Under construction ..... Chap. 12
High-rise ..... *see* High-rise buildings
Bushings 4.3.5.1

-C-

Calculations, hydraulic 7.10.1.2, 7.10.2.2, 8.2, 8.3, A.7.10.1.2
Certificate, for standpipe systems 11.1.3
Check valves ..... 6.3, A.6.3.5 to A.6.3.8.5
Fire department connections 6.4.2
Interconnected standpipes 7.5.2
Closets and cabinets, hose 4.6.1
Combined standpipe systems
Definition 3.3.12.2
Flow rates, minimum 7.10.1.3
Sizes, minimum 7.6.2
Valves 6.3.5, 6.3.8.3
Components, system ..... Chap. 4; *see also* specific components, e.g., Fire department connections
Connections ..... *see* Fire department connections; Hose connections
Contractor's Material and Test Certificate for Standpipe Systems 11.1.3
Control valves 4.5.1.2, 5.2.1.4, 5.2.3.4, 5.2.3.6, 6.3.5, 6.3.6.1.2.1, 6.3.7.1, A.5.2.1.4, A.5.2.3.4
Definition 3.3.16.1
Signs ..... 6.3.8.1 to 6.3.8.3
Copper tube and fittings 4.2.5, 4.3.1
Couplings 4.3.4.1
Covered mall buildings ..... 7.3.2(4)

-D-

Definitions Chap.3
Deluge valves 5.2.3, 8.3.1.5, A.5.2.3.1.3, A.5.2.3.4
Design ..... Chap. 7; *see also* Hydraulically designed systems
Drains 4.1.3, 5.5.1.2, 7.11, A.7.11
Main
Flow test 11.5.5
Test connections 7.11.3
Valves, signs for 6.3.8.2
Drip valves 6.4.4
Dry standpipe systems
Automatic ..... 5.2.1, 5.4.3, 6.4.3(2), A.5.2.1
Air pressure and supply 5.2.1.5, A.5.2.1.5.2
Definition 3.3.12.3.1
Flow tests 11.5.6
Size of systems 5.2.1.3, A.5.2.1.3
Auxiliary system supplied by wet system 5.2.2.2
Class I 5.4.1.4
Class II and Class III 5.4.3
Fire department connection installation ..... 6.4.3(2) to 6.4.3(4)
Flow tests 11.5.6
Location of 6.1.1
Manual ..... 5.2.4, 6.4.3(4), A.5.2.4
Definition 3.3.12.3.2
Semiautomatic ..... 5.2.3, 5.4.3, 6.4.3(3), A.5.2.3.1.3, A.5.2.3.4
Flow tests 11.5.6

-E-

Equivalency to standard 1.4
Existing systems, testing of 11.4.7
Exit ..... *see* Exit passageways; Horizontal exits; Stairways
Exit passageways ..... 7.3.2(3), 7.3.2(4), Fig. A.7.3.2(c)
Definition 3.3.3.1

-F-

Feed mains 6.3.7.1
Definition 3.3.4
Fire brigade use, marking for 5.1.4
Fire department connections 4.8, 6.4, 7.7.1, 7.7.4, A.6.4,
For automatic systems ..... 6.4.3(1), 6.4.3(2), 7.7.2
Definition 3.3.2.1.1
Buildings under construction 12.2
Hydrostatic tests 11.4.1, 11.4.6, A.11.4.1
Installation requirements 6.4.3
Location and identification of 6.4.5, A.6.4.5.4
For manual systems ..... 6.4.3(4)
Definition 3.3.2.1.2
Number required 7.12, A.7.12
Protection of 12.9
For semiautomatic systems ..... 6.4.3(3), 7.7.2
Threads, testing of 11.3
Valves 6.3.1, 6.3.6, A.6.3.6.2
Fire department pumpers 7.7.4, 7.9.4, 9.1.2, 11.5.2
Fire pumps ..... 9.1.5(2), 9.1.5(3), 9.1.5(5)
Buildings under construction 12.8.1
Pressure gauges 5.5.1
Signs for 6.7
For standpipe system zones 7.9
Testing 11.5.2, 11.5.7
Fittings 4.3
Fire department connections 4.8.2
Threaded 4.4.1, A.4.4.1.2
Welded 4.4.2, A.4.4.2
Flow rates, systems 7.10, A.7.10.1.1, A.7.10.1.2
Flow tests 11.5, A.11.5.1, A.11.5.4.1
Freezing, protection from 5.2.3.6.1, 5.4.1.4, 5.4.3, 5.5.1.1, 6.1.2.3, 6.4.4, 11.4.8, 12.7.2

Copyright National Fire Protection Association
Provided by IHS under license with NFPA
No reproduction or networking permitted without license from IHS
Not for Resale

-G-

Gate valves ..... 6.3, A.6.3.5 to A.6.3.8.5
Gauges, pressure ..... *see* Pressure gauges

-H-

Hardware, system ... Chap. 4; *see also* specific hardware, e.g., Fittings
High-rise buildings A.4.1, A.5.5, A.7.8
Definition 3.3.5
Fire department connections 7.12.2
Horizontal exits ..... 7.3.2(2)
Definition 3.3.3.2
Hose 4.6.2, 12.3, A.4.6.2.1
Hose connections 4.7
Buildings under construction 12.3, 12.5, A.12.5
Class III standpipe systems 7.3.4
Class II standpipe systems 7.3.3, A.7.3.3
Class I standpipe systems 5.3.1, 7.3.2, A.7.3.2
Closets and cabinets, hose in 4.6.1.1, 4.6.1.2
Definition 3.3.2.2
Hose supplied for 4.6.2.1, A.4.6.2.1
Locations of ..... 7.3, A.7.3.1 to A.7.3.3
Maximum pressure 7.2.3, 7.8.3, A.7.2.3, A.7.8.3
Protection of 12.9
Remote control devices, semiautomatic-dry system 5.2.3, A.5.2.3.1.3, A.5.2.3.4
Signs 5.4.2
Spacing and location of 5.1.3
Threads ..... 4.7.2 to 4.7.4, 11.3
Hose racks or reels 4.6.3, 4.6.5, A.4.6.5
Hose stations 4.6, A.4.6.2.1, A.4.6.5
Class III standpipe systems 5.3.3
Class II standpipe systems 5.3.2, 7.3.3, A.7.3.3
Definition 3.3.6
Location of 7.3.1, 7.3.3, A.7.3.1, A.7.3.3
Hose threads ..... 4.7.2 to 4.7.4, 11.3
Hose valves 4.7.1, 5.2.3.7, 7.2.2, 12.5.2
Definition 3.3.16.2
Hydrants 6.4.5.4, A.6.4.5.4
Hydraulically designed systems 7.6.3, 7.8.1
Calculations 7.10.1.2, 7.10.2.2, 8.2, 8.3, A.7.10.1.2
Combined systems 7.10.1.3.2
Information signs 6.8, A.6.8
Minimum flow rates for 7.10, A.7.10.1.1, A.7.10.1.2
Class I and Class III systems 7.10.1.1, A.7.10.1.1
Class II systems 7.10.2
Hydrostatic tests 11.4, A.11.4.1

-I-

Indicator valves 4.5.1, 6.3.1.1, 6.3.3, 6.3.6.1.1, 6.3.6.2, A.6.3.6.2
Installation
Requirements ..... Chap. 6
Temporary 12.7
Instructions 11.8
Iron pipe and fittings 4.2.1, 4.2.2, 4.3.1
Isolation valves 6.3.1.2, 6.3.2

-J-

Joints, pipe and fittings ..... *see* Pipe and piping systems

-L-

Large area buildings 7.10.1.1.2, A.7.10.1.1.2
Listed
Definition 3.2.3, A.3.2.3
Fire department connections 4.8.1
Remote control devices, semiautomatic-dry system 5.2.3.1, 5.2.3.3, A.5.2.3.1.3
Requirements 4.1.2, 4.1.3
Valves 4.5.1, 4.7.1, 6.4.2

-M-

Main drains
Flow test 11.5.5
Test connections 7.11.3
Manual standpipe systems 5.4.1.3, 5.4.2, 7.7.3
Definition 3.3.12.4
Dry ..... *see* Dry standpipe systems
Fire department connection installation ..... 6.4.3(1), 6.4.3(4)
Flow tests 11.5.2
Water supply 9.1.2
Wet 5.2.5, A.5.2.5
Manual valve test 11.6
Measurements, units of 1.5

-N-

Nozzle pressure A.7.8
Definition 3.3.7.1
Nozzles 4.6.4

-P-

Pipe and piping systems 4.2
Bending 4.2.7
Buildings under construction 12.3, 12.4
End treatment 4.4.6
Flushing 11.2
Freezing, protection from 6.1.2.3, 11.4.8, 12.7.2
Hydrostatic tests 11.4, A.11.4.1
Joining of ..... 4.4, A.4.4.1.2 to A.4.4.4
Brazed 4.4.4, A.4.4.4
Groove methods 4.4.3
Location of 6.1, A.6.1
Materials and dimensions ..... 4.2.1 to 4.2.6
Protection of 6.1.2, A.6.1.2.1
Size of pipe ..... 7.7, Table 7.8.2.1, 12.3
Support of 6.5, 12.4
Threaded pipe 4.4.1, A.4.4.1.2
Underground piping 6.2
Welded 4.4.2, A.4.4.2
Qualifications 4.4.2.13
Records 4.4.2.14
Plans, standpipe system 8.1, A.8.1
Preaction valves 5.2.3.5
Pressure
Maximum 7.2, 11.4.1, A.7.2, A.11.4.1
For hose connections 7.8.3, A.7.8.3
Minimum 7.8.1, 7.8.2
Nozzle A.7.8
Definition 3.3.7.1
Residual 7.8.1, 7.8.2.1, 7.8.3.1, 7.8.3.2, 7.9.4, 7.10.1.2.1, 7.10.2.2.1, 11.5.4.2, 11.5.5.2, A.7.8.3.2
Definition 3.3.7.2
Static 7.8.3.2, 11.5.4.2, 11.5.5.2, A.7.8.3.2
Definition 3.3.7.3
Pressure control valves (definition) 3.3.16.3
Pressure gauges 5.2.1.2, 5.2.3.5, 5.5, 11.4.9, A.5.5
Pressure limitations, standpipe systems 7.2, 7.8, A.7.2, A.7.8
Pressure-reducing valves A.7.11
Definition 3.3.16.4, A.3.3.16.4
Pressure-regulating devices ..... 4.9, 5.5.2, 7.1.2, 7.2.2 to 7.2.4, 7.8.3, A.7.1.2, A.7.2.3, A.7.8.3
Definition 3.3.8, A.3.3.8
Hydraulic calculations 8.3.1.5
Testing of 11.5.4, A.11.5.4.1
Pressure-restricting devices (definition) 3.3.9
Pumps, fire ..... *see* Fire pumps
Purpose of standard 1.2

Copyright National Fire Protection Association
Provided by IHS under license with NFPA
No reproduction or networking permitted without license from IHS
Not for Resale

-R-

Rated capacity (definition) 3.3.10
Reducers 4.3.5
References ..... Chap. 2, Annex B
Requirements, system ..... Chap. 5
Residual pressure ..... *see* Pressure, Residual
Retroactivity of standard 1.3
Roof access ..... 7.3.2(5), A.7.3.2(5)

-S-

Scope of standard 1.1, A.1.1.2
Semiautomatic standpipe systems
Class I 5.4.1.2, 5.4.1.3, 7.7.2
Class II and Class III 7.7.2
Definition 3.3.12.5
Dry 5.2.3, A.5.2.3.1.3, A.5.2.3.4
Fire department connection installation ..... 6.4.3(3)
Flow tests 11.5.6
Waterflow alarms 5.6.1
Water supply 7.7.2, 9.1.1, 9.1.3
Shall (definition) 3.2.4
Should (definition) 3.2.5
Shutoff valves 6.4.1
Signs 4.1.3, 4.10
Fire department connections 6.4.5.2
Fire pumps 6.7
Hose closets and cabinets 4.6.1.1.2, 4.6.1.4
Hydraulic design information 6.8, A.6.8
Installation of 6.6
For room identification, valves, and hose connections 6.3.8, A.6.3.8.5
Standpipe systems 5.1.4, 5.4.2
Verification of 11.9
SI units 1.5.1
Specifications, standpipe system 8.1, A.8.1
Sprinkler systems 5.2.5, 5.3.3.2, 5.4.1.3, 6.1.2.2.1, 7.3.4.1, 7.6.3, 7.7.3, 11.1.2, A.5.2.5
Minimum flow rates 7.10.1.3
Signs 6.4.5.2.1
Stairways
Exit ..... 6.1.2.2.3, 7.3.2.1, 7.3.2(1)
Roof access ..... 7.3.2(5), A.7.3.2(5)
Standard (definition) 3.2.6
Standpipes
Buildings under construction ..... Chap. 12
Definition 3.3.11
Drains 7.11.2
Interconnections of 7.5, A.7.5
Location of 6.1.1
Minimum sizes for 7.6
Number of 7.4
Spacing and location of 5.1.3
Standpipe systems ..... *see also* Standpipe system zones; System demand
Classes of ..... *see* System types
Components and hardware . Chap. 4; *see also* specific components, e.g., Fire department connections
Definition 3.3.12, A.3.3.12
Requirements ..... Chap. 5
Tests
Acceptance ..... Chap. 11
Water supply ..... Chap. 10
Standpipe system zones 7.9, A.7.1
Definition 3.3.13
Fire department connections 7.12, A.7.12
Pumps for 7.9
Static pressure ..... *see* Pressure, Static
Steel pipe and fittings ..... Table 4.2.1, 4.2.3, 4.2.4, 4.3.1
Supervisory alarms 5.6, 6.3.7.1, 11.7, A.5.6
System demand 7.7
Definition 3.3.14, A.3.3.15
System types 5.1.2, A.5.1.2
Class III systems 5.3.3, 5.4.3
Definition 3.3.15.3
Fire department connections 7.12.1
Flow rates 7.10.1, A.7.10.1.1, A.7.10.1.2
Hose connection locations 7.3.4
Hose for 4.6.2.1, A.4.6.2.1
Minimum water supply 9.2
System design and pipe size 7.7.1, 7.7.2
Class II systems 5.3.2, 5.4.3
Definition 3.3.15.2
Flow rates 7.10.2
Hose connection locations 7.3.3, A.7.3.3
Hose for 4.6.2.1, A.4.6.2.1
Minimum water supply 9.3
Nozzles 4.6.4
System design and pipe size 7.7.2
Class I systems 5.3.1, 5.4.1
Definition 3.3.15.1
Fire department connections 7.12.1
Flow rates 7.10.1, A.7.10.1.1, A.7.10.1.2
Hose connection locations 7.3.2, A.7.3.2
Minimum water supply 9.2
System design and pipe size 7.7.1, 7.7.2
Required type of system 5.4, A.5.4
System zones ..... *see* Standpipe system zones

-T-

Tanks, water supply ..... 9.1.5(4), 9.1.5(6)
Flow tests 11.5.3
Pressure gauges 5.5.1
Test riser 7.11, A.7.11
Tests
Combination systems 11.1.2
System acceptance ..... Chap. 11
Water supply ..... Chap. 10
Tube ..... *see* Pipe and piping systems

-U-

Underground piping 6.2
Underground valves 6.3.6.1.3, 6.3.7.2
Unions 4.3.4
Units of measurement 1.5

-V-

Valve rooms 5.2.3.6.2
Valves 4.5
Check ..... *see* Check valves
Combined systems 6.3.5, 6.3.8.3
Control ..... *see* Control valves
Deluge ..... *see* Deluge valves
Drip 6.4.4
Dry pipe valves 5.2.1.4, 8.3.1.5, A.5.2.1.4
Fire department connections 6.3.1, 6.3.6, A.6.3.6.2
Gate ..... 6.3, A.6.3.5 to A.6.3.8.5
Hose ..... *see* Hose valves
Hydraulic calculations 8.3.1.5
Indicator ..... *see* Indicator valves
Isolation 6.3.1.2, 6.3.2
Preaction 5.2.3.5
Pressure control (definition) 3.3.16.3
Pressure gauge 5.5.1.2
Pressure-reducing A.7.11
Definition 3.3.16.4, A.3.3.16.4
Relief 5.2.1.4, A.5.2.1.4
Shutoff 6.4.1
Signs for 6.3.8, A.6.3.8.5
Supervision 6.3.7
Testing 11.6
Underground 6.3.6.1.3, 6.3.7.2

Copyright National Fire Protection Association
Provided by IHS under license with NFPA
No reproduction or networking permitted without license from IHS
Not for Resale

-W-

Water additives 11.4.10
Waterflow alarms 5.6, A.5.6
Waterflow tests ..... Chap. 10
Water supply ..... Chap. 9
Automatic dry standpipe system 5.2.1.1
Automatic wet system 5.2.2.1, 5.2.2.2
Buildings under construction 12.3, 12.8
Class I and Class III systems, minimum supply for 9.2
Class II systems, minimum supply for 9.3
Fire department connection, system with 7.7.4
Flow tests 11.5, A.11.5.1, A.11.5.4.1
Installation, timing of 12.8
Manual dry system 5.2.4, A.5.2.4
Manual wet system 5.2.5, A.5.2.5
Pressure gauges 5.5.1
Required 9.1, A.9.1
Semiautomatic dry system 5.2.3.2
Standpipe system zones 7.9
Testing ..... Chap. 10
Wet standpipe systems 7.7.3
Automatic 5.2.2
Class I 5.4.1.4
Definition 3.3.12.6
Fire department connections 6.4
Manual 5.2.5, A.5.2.5
Waterflow alarms 5.6.3

-Y-

Yard main 6.3.6.2, A.6.3.6.2

-Z-

Zones, standpipe systems .....*see* Standpipe system zones

--`,,```,,,,````-`-`,,`,,`,`,,`---

Copyright National Fire Protection Association
Provided by IHS under license with NFPA
No reproduction or networking permitted without license from IHS
Not for Resale

Sequence of Events Leading to Issuance of an NFPA Committee Document

Step 1: Call for Proposals

- Proposed new Document or new edition of an existing Document is entered into one of two yearly revision cycles, and a Call for Proposals is published.

Step 2: Report on Proposals (ROP)

- Committee meets to act on Proposals, to develop its own Proposals, and to prepare its Report.
- Committee votes by written ballot on Proposals. If two-thirds approve, Report goes forward. Lacking two-thirds approval, Report returns to Committee.
- Report on Proposals (ROP) is published for public review and comment.

Step 3: Report on Comments (ROC)

- Committee meets to act on Public Comments to develop its own Comments, and to prepare its report.
- Committee votes by written ballot on Comments. If two-thirds approve, Report goes forward. Lacking two-thirds approval, Report returns to Committee.
- Report on Comments (ROC) is published for public review.

Step 4: Technical Report Session

- "*Notices of intent to make a motion"* are filed, are reviewed, and valid motions are certified for presentation at the Technical Report Session. ("Consent Documents" that have no certified motions bypass the Technical Report Session and proceed to the Standards Council for issuance.)
- NFPA membership meets each June at the Annual Meeting Technical Report Session and acts on Technical Committee Reports (ROP and ROC) for Documents with "certified amending motions."
- Committee(s) vote on any amendments to Report approved at NFPA Annual Membership Meeting.

Step 5: Standards Council Issuance

- Notification of intent to file an appeal to the Standards Council on Association action must be filed within 20 days of the NFPA Annual Membership Meeting.
- Standards Council decides, based on all evidence, whether or not to issue Document or to take other action, including hearing any appeals.

Committee Membership Classifications

The following classifications apply to Technical Committee members and represent their principal interest in the activity of the committee.

M *Manufacturer:* A representative of a maker or marketer of a product, assembly, or system, or portion thereof, that is affected by the standard.

U *User:* A representative of an entity that is subject to the provisions of the standard or that voluntarily uses the standard.

I/M *Installer/Maintainer:* A representative of an entity that is in the business of installing or maintaining a product, assembly, or system affected by the standard.

L *Labor:* A labor representative or employee concerned with safety in the workplace.

R/T *Applied Research/Testing Laboratory:* A representative of an independent testing laboratory or independent applied research organization that promulgates and/or enforces standards.

E *Enforcing Authority:* A representative of an agency or an organization that promulgates and/or enforces standards.

I *Insurance:* A representative of an insurance company, broker, agent, bureau, or inspection agency.

C *Consumer:* A person who is, or represents, the ultimate purchaser of a product, system, or service affected by the standard, but who is not included in the *User* classification.

SE *Special Expert:* A person not representing any of the previous classifications, but who has a special expertise in the scope of the standard or portion thereof.

NOTES;
1. "Standard" connotes code, standard, recommended practice, or guide.
2. A representative includes an employee.
3. While these classifications will be used by the Standards Council to achieve a balance for Technical Committees, the Standards Council may determine that new classifications of members or unique interests need representation in order to foster the best possible committee deliberations on any project. In this connection, the Standards Council may make appointments as it deems appropriate in the public interest, such as the classification of "Utilities" in the National Electrical Code Committee.
4. Representatives of subsidiaries of any group are generally considered to have the same classification as the parent organization.

--`,,```,,,,````-`-`,,`,,`,`,,`---
Copyright National Fire Protection Association
Provided by IHS under license with NFPA
No reproduction or networking permitted without license from IHS
Not for Resale

NFPA Technical Committee Document Proposal Form

NOTE: All Proposals must be received by 5:00 p.m. EST/EDST on the published Proposal Closing Date.

For further information on the standards-making process, please contact the Codes and Standards Administration at 617-984-7249.

For technical assistance, please call NFPA at 617-770-3000.

FOR OFFICE USE ONLY

Log #:

Date Rec'd:

Please indicate in which format you wish to receive your ROP/ROC ☐ **electronic** ☐ **paper** ☒ **download**
(Note: If choosing the download option, you must view the ROP/ROC from our website; no copy will be sent to you.)

Date April 1, 200X **Name** John J. Doe **Tel. No.** 716-555-1234

Company Air Canada Pilot's Association

Street Address 123 Summer Street Lane **City** Lewiston **State** NY **Zip** 14092

Please indicate organization represented (if any)

1. (a) NFPA Document Title National Fuel Gas Code **NFPA No. & Year** 54, 200X Edition

(**b) Section/Paragraph** 3.3

2. Proposal Recommends (check one): ☐ new text ☒ revised text ☐ deleted text

3. Proposal (include proposed new or revised wording, or identification of wording to be deleted): [Note: Proposed text should be in legislative format, i.e., use underscore to denote wording to be inserted (inserted wording) and strike-through to denote wording to be deleted (~~deleted wording~~).]

Revise definition of effective ground-fault current path to read:

3.3.78 Effective Ground-Fault Current Path. An intentionally constructed, permanent, low impedance electrically conductive path designed and intended to carry ~~underground~~ electric fault current ~~conditions~~ from the point of a ground fault on a wiring system to the electrical supply source.

4. Statement of Problem and Substantiation for Proposal: (Note: State the problem that would be resolved by your recommendation; give the specific reason for your Proposal, including copies of tests, research papers, fire experience, etc. If more than 200 words, it may be abstracted for publication.)

Change uses proper electrical terms.

5. Copyright Assignment

(a) ☐ **I am the author of the text or other material (such as illustrations, graphs) proposed in this Proposal.**

(b) ☒ **Some or all of the text or other material proposed in this Proposal was not authored by me. Its source is as follows** (please identify which material and provide complete information on its source)**:**

ABC Co.

I hereby grant and assign to NFPA all and full rights in copyright in this Proposal and understand that I acquire no rights in any publication of NFPA in which this Proposal in this or another similar or analogous form is used. Except to the extent that I do not have authority to make an assignment in materials that I have identified in (b) above, I hereby warrant that I am the author of this Proposal and that I have full power and authority to enter into this assignment.

Signature (Required)

PLEASE USE SEPARATE FORM FOR EACH PROPOSAL • NFPA Fax: (617) 770-3500
Mail to: Secretary, Standards Council, National Fire Protection Association, 1 Batterymarch Park, Quincy, MA 02169-7471

8/29/2006

SAMPLE

--`,,```,,,,````-`-`,,`,,`,`,,`---

Copyright National Fire Protection Association
Provided by IHS under license with NFPA
No reproduction or networking permitted without license from IHS

Not for Resale

NFPA Technical Committee Document Proposal Form

NOTE: All Proposals must be received by 5:00 p.m. EST/EDST on the published Proposal Closing Date.

For further information on the standards-making process, please contact the Codes and Standards Administration at 617-984-7249.

For technical assistance, please call NFPA at 617-770-3000.

FOR OFFICE USE ONLY

Log #: _____

Date Rec'd: _____

Please indicate in which format you wish to receive your ROP/ROC ☐ electronic ☐ paper ☐ download
(Note: If choosing the download option, you must view the ROP/ROC from our website; no copy will be sent to you.)

Date _____ **Name** _____ **Tel. No.** _____

Company _____

Street Address _____ **City** _____ **State** _____ **Zip** _____

Please indicate organization represented (if any) _____

1. (a) NFPA Document Title _____ **NFPA No. & Year** _____

(b) Section/Paragraph _____

2. Proposal Recommends (check one): ☐ new text ☐ revised text ☐ deleted text

3. Proposal (include proposed new or revised wording, or identification of wording to be deleted): [Note: Proposed text should be in legislative format, i.e., use underscore to denote wording to be inserted (inserted wording) and strike-through to denote wording to be deleted (~~deleted wording~~).]

4. Statement of Problem and Substantiation for Proposal: (Note: State the problem that would be resolved by your recommendation; give the specific reason for your Proposal, including copies of tests, research papers, fire experience, etc. If more than 200 words, it may be abstracted for publication.)

5. Copyright Assignment

(a) ☐ I am the author of the text or other material (such as illustrations, graphs) proposed in this Proposal.

(b) ☐ Some or all of the text or other material proposed in this Proposal was not authored by me. Its source is as follows (please identify which material and provide complete information on its source)**:**

_____

I hereby grant and assign to NFPA all and full rights in copyright in this Proposal and understand that I acquire no rights in any publication of NFPA in which this Proposal in this or another similar or analogous form is used. Except to the extent that I do not have authority to make an assignment in materials that I have identified in (b) above, I hereby warrant that I am the author of this Proposal and that I have full power and authority to enter into this assignment.

Signature (Required) _____

PLEASE USE SEPARATE FORM FOR EACH PROPOSAL • NFPA Fax: (617) 770-3500

Mail to: Secretary, Standards Council, National Fire Protection Association, 1 Batterymarch Park, Quincy, MA 02169-7471

8/29/2006

Copyright National Fire Protection Association
Provided by IHS under license with NFPA
No reproduction or networking permitted without license from IHS
Not for Resale