NFPA 13R

Standard for the Installation of Sprinkler Systems in Residential Occupancies up to and Including Four Stories in Height

2007 Edition

NFPA, 1 Batterymarch Park, Quincy, MA 02169-7471
An International Codes and Standards Organization

--`,,```,,,,````-`-`,,`,,`,`,,`---

Copyright National Fire Protection Association
Provided by IHS under license with NFPA
No reproduction or networking permitted without license from IHS

Not for Resale

IMPORTANT NOTICES AND DISCLAIMERS CONCERNING NFPA DOCUMENTS

NOTICE AND DISCLAIMER OF LIABILITY CONCERNING THE USE OF NFPA DOCUMENTS

NFPA codes, standards, recommended practices, and guides, of which the document contained herein is one, are developed through a consensus standards development process approved by the American National Standards Institute. This process brings together volunteers representing varied viewpoints and interests to achieve consensus on fire and other safety issues. While the NFPA administers the process and establishes rules to promote fairness in the development of consensus, it does not independently test, evaluate, or verify the accuracy of any information or the soundness of any judgments contained in its codes and standards.

The NFPA disclaims liability for any personal injury, property or other damages of any nature whatsoever, whether special, indirect, consequential or compensatory, directly or indirectly resulting from the publication, use of, or reliance on this document. The NFPA also makes no guaranty or warranty as to the accuracy or completeness of any information published herein.

In issuing and making this document available, the NFPA is not undertaking to render professional or other services for or on behalf of any person or entity. Nor is the NFPA undertaking to perform any duty owed by any person or entity to someone else. Anyone using this document should rely on his or her own independent judgment or, as appropriate, seek the advice of a competent professional in determining the exercise of reasonable care in any given circumstances.

The NFPA has no power, nor does it undertake, to police or enforce compliance with the contents of this document. Nor does the NFPA list, certify, test or inspect products, designs, or installations for compliance with this document. Any certification or other statement of compliance with the requirements of this document shall not be attributable to the NFPA and is solely the responsibility of the certifier or maker of the statement.

Copyright National Fire Protection Association
Provided by IHS under license with NFPA
No reproduction or networking permitted without license from IHS
Not for Resale

ADDITIONAL NOTICES AND DISCLAIMERS

Updating of NFPA Documents

Users of NFPA codes, standards, recommended practices, and guides should be aware that these documents may be superseded at any time by the issuance of new editions or may be amended from time to time through the issuance of Tentative Interim Amendments. An official NFPA document at any point in time consists of the current edition of the document together with any Tentative Interim Amendments and any Errata then in effect. In order to determine whether a given document is the current edition and whether it has been amended through the issuance of Tentative Interim Amendments or corrected through the issuance of Errata, consult appropriate NFPA publications such as the National Fire Codes® Subscription Service, visit the NFPA website at www.nfpa.org, or contact the NFPA at the address listed below.

Interpretations of NFPA Documents

A statement, written or oral, that is not processed in accordance with Section 6 of the Regulations Governing Committee Projects shall not be considered the official position of NFPA or any of its Committees and shall not be considered to be, nor be relied upon as, a Formal Interpretation.

Patents

The NFPA does not take any position with respect to the validity of any patent rights asserted in connection with any items which are mentioned in or are the subject of NFPA codes, standards, recommended practices, and guides, and the NFPA disclaims liability for the infringement of any patent resulting from the use of or reliance on these documents. Users of these documents are expressly advised that determination of the validity of any such patent rights, and the risk of infringement of such rights, is entirely their own responsibility.

NFPA adheres to applicable policies of the American National Standards Institute with respect to patents. For further information contact the NFPA at the address listed below.

Law and Regulations

Users of these documents should consult applicable federal, state, and local laws and regulations. NFPA does not, by the publication of its codes, standards, recommended practices, and guides, intend to urge action that is not in compliance with applicable laws, and these documents may not be construed as doing so.

Copyrights

This document is copyrighted by the NFPA. It is made available for a wide variety of both public and private uses. These include both use, by reference, in laws and regulations, and use in private self-regulation, standardization, and the promotion of safe practices and methods. By making this document available for use and adoption by public authorities and private users, the NFPA does not waive any rights in copyright to this document.

Use of NFPA documents for regulatory purposes should be accomplished through adoption by reference. The term "adoption by reference" means the citing of title, edition, and publishing information only. Any deletions, additions, and changes desired by the adopting authority should be noted separately in the adopting instrument. In order to assist NFPA in following the uses made of its documents, adopting authorities are requested to notify the NFPA (Attention: Secretary, Standards Council) in writing of such use. For technical assistance and questions concerning adoption of NFPA documents, contact NFPA at the address below.

For Further Information

All questions or other communications relating to NFPA codes, standards, recommended practices, and guides and all requests for information on NFPA procedures governing its codes and standards development process, including information on the procedures for requesting Formal Interpretations, for proposing Tentative Interim Amendments, and for proposing revisions to NFPA documents during regular revision cycles, should be sent to NFPA headquarters, addressed to the attention of the Secretary, Standards Council, NFPA, 1 Batterymarch Park, P.O. Box 9101, Quincy, MA 02269-9101.

For more information about NFPA, visit the NFPA website at www.nfpa.org.

Copyright National Fire Protection Association
Provided by IHS under license with NFPA
No reproduction or networking permitted without license from IHS
Not for Resale

Copyright © 2006 National Fire Protection Association. All Rights Reserved.

NFPA 13R

Standard for the

Installation of Sprinkler Systems in Residential Occupancies up to and Including Four Stories in Height

2007 Edition

This edition of NFPA 13R, *Standard for the Installation of Sprinkler Systems in Residential Occupancies up to and Including Four Stories in Height*, was prepared by the Technical Committee on Residential Sprinkler Systems, released by the Technical Correlating Committee on Automatic Sprinkler Systems, and acted on by NFPA at its June Association Technical Meeting held June 4–8, 2006, in Orlando, FL. It was issued by the Standards Council on July 28, 2006, with an effective date of August 17, 2006, and supersedes all previous editions.

This edition of NFPA 13R was approved as an American National Standard on August 17, 2006.

Origin and Development of NFPA 13R

The first edition of NFPA 13R, which was published in 1989, represented a milestone in the development of sprinkler installation design standards. The first edition resulted in a standard for the protection of low-rise, residential facilities.

This standard is intended to provide a higher degree of life safety and property protection to the inhabitants of low-rise, multifamily dwellings. Promulgated as a document that provides for increased levels of protection to building occupants, the document also considers the economic aspects of a sprinklered facility as compared to an unsprinklered facility.

As the number of states and cities that implement sprinkler ordinances continues to grow, and as the threshold levels for sprinkler requirements in residential occupancies in the building codes extend to certain low-rise structures, it is believed that systems for certain residential occupancies can be efficiently and effectively installed in accordance with this standard.

The 1994 edition provided expanded information on nonmetallic pipe materials, minor changes to clarify the established design criteria, and a new recommendation on underground pipe materials.

The 1996 edition included several changes that paralleled amendments in the 1996 edition of NFPA 13, *Standard for the Installation of Sprinkler Systems*. Other changes included a number of clarifications concerning the selection of sprinklers as well as the proper use of sprinklers.

The 1999 edition clarified criteria for nonmetallic pipe and fittings and established a minimum operating pressure for sprinklers. Guidance on providing freeze protection using insulation in attics and antifreeze systems was provided, as was information on the application of solvent cement for nonmetallic piping. Exceptions for omitting sprinkler coverage in closets on balconies and underneath garage doors were added.

The 2002 edition incorporated revisions to update the standard to comply with the 2000 edition of the *Manual of Style for NFPA Technical Committee Documents*. These revisions included editorially rewording any exceptions as requirements. The 2002 edition also included changes that further clarified the scope of the standard, established a minimum design discharge density, and added protection requirements specifically for garages. The section addressing spaces where sprinklers are permitted to be omitted was changed so that the area of full-height tub/shower enclosures would be included in the area determination for bathrooms, sprinklers would be provided in concealed spaces with fuel-fired equipment, and the omission of sprinklers in elevator machine rooms would not be dependent on the room's location.

This 2007 edition now includes spacing and obstruction rules addressing sloped ceilings, ceiling pockets, ceiling fans, and kitchen cabinets. For this edition, the requirements for utilizing quick-response sprinklers within NFPA 13R regulations were clarified, and new requirements addressing architectural features within dwelling units were added. Additionally, the requirements covering closets, including obstructions within closets and protection of mechanical closets, were clarified. Finally, new requirements were added that are applicable from NFPA 13 to NFPA 13R, to ensure proper administration of those requirements where relevant.

Copyright National Fire Protection Association
Provided by IHS under license with NFPA
No reproduction or networking permitted without license from IHS
Not for Resale

Technical Correlating Committee on Automatic Sprinkler Systems (AUT-AAC)

John G. O'Neill, *Chair*
The Protection Engineering Group, PC, VA [SE]

Christian Dubay, *Nonvoting Secretary*
National Fire Protection Association, MA

Jose R. Baz, International Engineered Systems Limited, Inc., FL [M]
Rep. NFPA Latin American Section
Kerry M. Bell, Underwriters Laboratories Inc., IL [RT]
Russell P. Fleming, National Fire Sprinkler Association, NY [M]
Scott T. Franson, The Viking Corporation, MI [M]
James B. Harmes, Grand Blanc Fire Department, MI [E]
Rep. International Association of Fire Chiefs
Luke Hilton, Liberty Mutual Property, NC [I]
Alex Hoffman, Viking Fire Protection Inc., Canada [IM]
Rep. Canadian Automatic Sprinkler Association
Roland J. Huggins, American Fire Sprinkler Association, Inc., TX [IM]
Sultan M. Javeri, SC Engineering, France [IM]
Andrew Kim, National Research Council of Canada, Canada [RT]
Donald C. Moeller, The RJA Group, Inc., CA [SE]
Joe W. Noble, Clark County Fire Department, NV [E]
Rep. International Fire Marshals Association
Eric Packard, Local 669 JATC Education Fund, MD [L]
Rep. United Association of Journeymen & Apprentices of the Plumbing & Pipe Fitting Industry of the U.S. & Canada
Chester W. Schirmer, Schirmer Engineering Corporation, NC [I]
Robert D. Spaulding, FM Global, MA [I]
Lynn K. Underwood, Axis U.S. Property, IL [I]

Alternates

Donald "Don" D. Becker, RJC & Associates, Inc., MO [IM]
(Alt. to R. J. Huggins)
Thomas C. Brown, The RJA Group, Inc., MD [SE]
(Alt. to D. C. Moeller)
George Capko, Jr., FM Global, MA [I]
(Alt. to R. D. Spaulding)
Kenneth E. Isman, National Fire Sprinkler Association, NY [M]
(Alt. to R. P. Fleming)
George E. Laverick, Underwriters Laboratories Inc., IL [RT]
(Alt. to K. M. Bell)
Garner A. Palenske, Schirmer Engineering Corporation, CA [I]
(Alt. to C. W. Schirmer)
Donato A. Pirro, Electro Sistemas De Panama, S.A., Panama [M]
(Alt. to J. R. Baz)
J. Michael Thompson, The Protection Engineering Group, PC, VA [SE]
(Alt. to J. G. O'Neill)

Nonvoting

Antonio C. M. Braga, FM Global, CA [I]
Rep. TC on Hanging & Bracing of Water-Based Systems
Edward K. Budnick, Hughes Associates, Inc., MD [SE]
Rep. TC on Sprinkler System Discharge Criteria
Robert M. Gagnon, Gagnon Engineering, MD [SE]
Rep. TC on Foam-Water Sprinklers
William E. Koffel, Koffel Associates, Inc., MD [SE]
Rep. Safety to Life Correlating Committee
Kenneth W. Linder, GE Insurance Solutions, CT [I]
Rep. TC on Sprinkler System Installation Criteria
Daniel Madrzykowski, U.S. National Institute of Standards and Technology, MD [RT]
Rep. TC on Residential Sprinkler Systems
J. William Sheppard, General Motors Corp., MI [U]
Rep. TC on Private Water Supply Piping Systems
John J. Walsh, UA Joint Apprenticeship Committee, MD [SE]
(Member Emeritus)

Christian Dubay, NFPA Staff Liaison

This list represents the membership at the time the Committee was balloted on the final text of this edition. Since that time, changes in the membership may have occurred. A key to classifications is found at the back of the document.

NOTE: Membership on a committee shall not in and of itself constitute an endorsement of the Association or any document developed by the committee on which the member serves.

Committee Scope: This Committee shall have overall responsibility for documents that pertain to the criteria for the design and installation of automatic, open and foam-water sprinkler systems including the character and adequacy of water supplies, and the selection of sprinklers, piping, valves, and all materials and accessories. This Committee does not cover the installation of tanks and towers, nor the installation, maintenance, and use of central station, proprietary, auxiliary, and local signaling systems for watchmen, fire alarm, supervisory service, nor the design of fire department hose connections.

--`,,```,,,,````-`-`,,`,,`,`,,`---

Copyright National Fire Protection Association
Provided by IHS under license with NFPA
No reproduction or networking permitted without license from IHS
Not for Resale

Technical Committee on Residential Sprinkler Systems (AUT-RSS)

Daniel Madrzykowski, *Chair*
U.S. National Institute of Standards and Technology, MD [RT]

Christian Dubay, *Administrative Secretary*
National Fire Protection Association, MA

George W. Baker, Mashpee Fire & Rescue Department, MA [E]
Rep. International Association of Fire Chiefs
Kerry M. Bell, Underwriters Laboratories Inc., IL [RT]
Fred Benn, Advanced Automatic Sprinkler, Inc., CA [IM]
Jonathan C. Bittenbender, REHAU Inc., VA [M]
Frederick C. Bradley, FCB Engineering, GA [SE]
Lawrence Brown, National Association of Home Builders, DC [U]
Phillip A. Brown, American Fire Sprinkler Association, Inc., TX [IM]
Edward K. Budnick, Hughes Associates, Inc., MD [SE]
Thomas G. Deegan, The Viking Group, Inc., MI [M]
Rep. National Fire Sprinkler Association
Kenneth E. Isman, National Fire Sprinkler Association, NY [M]
Gary L. Johnson, Noveon, Inc., VA [M]
Rep. Committee for Firesafe Dwellings
David Killey, Fire Busters Inc., Canada [IM]
Rep. Canadian Automatic Sprinkler Association
Alan G. Larson, Uponor Wirsbo Company Inc., MN [M]
M. L. "Larry" Maruskin, U.S. Department of Homeland Security, MD [C]
Ronald G. Nickson, National Multi Housing Council, DC [U]
Eric Packard, Local 669 JATC Education Fund, MD [L]
Rep. United Assn of Journeymen & Apprentices of the Plumbing & Pipe Fitting Industry of the U.S. & Canada
Maurice M. Pilette, Mechanical Designs Ltd., MA [SE]
Chester W. Schirmer, Schirmer Engineering Corporation, NC [I]
Harry Shaw, Fail Safe Safety Systems Inc., MD [M]
George W. Stanley, Wiginton Fire Systems, FL [IM]
Rep. National Fire Sprinkler Association
Randolph W. Tucker, The RJA Group, Inc., TX [SE]
Ed Van Walraven, Aspen Fire Protection District, CO [E]
Terry L. Victor, Tyco/SimplexGrinnell, MD [M]
Hong-Zeng (Bert) Yu, FM Global, MA [I]

Alternates

David W. Ash, Noveon, Inc., OH [M]
(Alt. to G. L. Johnson)
James K. Clancy, The RJA Group, Inc., CA [SE]
(Alt. to R. W. Tucker)
Mark E. Fessenden, Tyco Fire & Building Products, RI [M]
(Alt. to T. L. Victor)
David B. Fuller, FM Global, MA [I]
(Alt. to H.-Z. Yu)
Franz P. Haase, Uponor Wirsbo Company Inc., NH [M]
(Alt. to A. G. Larson)
George E. Laverick, Underwriters Laboratories Inc., IL [RT]
(Alt. to K. M. Bell)
Thomas L. Multer, Reliable Automatic Sprinkler Company, SC [M]
(Alt. to T. G. Deegan)
Ron Murray, Plumbers and Steamfitters Local 290 (UA), OR [L]
(Alt. to E. Packard)
Steven R. Rians, Standard Automatic Fire Enterprises, Inc., TX [IM]
(Alt. to AFSA (IM) Rep.)
Peter T. Schwab, Wayne Automatic Fire Sprinklers, Inc., FL [IM]
(Alt. to G. W. Stanley)
David W. Stroup, U.S. National Institute of Standards and Technology, MD [RT]
(Alt. to D. Madrzykowski)
Ronald N. Webb, S.A. Comunale Company, Inc., OH [M]
(Alt. to K. E. Isman)
Joseph E. Wiehagen, National Association of Home Builders, MD [U]
(Alt. to L. Brown)
James V. C. Yates, West Windsor Emergency Services, NJ [E]
(Alt. to G. W. Baker)

Nonvoting

Rohit Khanna, U.S. Consumer Product Safety Commission, MD [C]

Christian Dubay, NFPA Staff Liaison

This list represents the membership at the time the Committee was balloted on the final text of this edition. Since that time, changes in the membership may have occurred. A key to classifications is found at the back of the document.

NOTE: Membership on a committee shall not in and of itself constitute an endorsement of the Association or any document developed by the committee on which the member serves.

Committee Scope: This Committee shall have primary responsibility for documents on the design and installation of automatic sprinkler systems in dwellings and residential occupancies up to and including four stories in height, including the character and adequacy of water supplies, and the selection of sprinklers, piping, valves, and all materials and accessories.

Copyright National Fire Protection Association
Provided by IHS under license with NFPA
No reproduction or networking permitted without license from IHS
Not for Resale

Contents

Chapter 1 Administration **13R–** 5
1.1 Scope **13R–** 5
1.2 Purpose **13R–** 5
1.3 Retroactivity **13R–** 5
1.4 Equivalency **13R–** 5
1.5 Units **13R–** 5

Chapter 2 Referenced Publications **13R–** 5
2.1 General **13R–** 5
2.2 NFPA Publications **13R–** 5
2.3 Other Publications **13R–** 5
2.4 References for Extracts in Mandatory Sections. (Reserved) **13R–** 6

Chapter 3 Definitions **13R–** 6
3.1 General **13R–** 6
3.2 NFPA Official Definitions **13R–** 6
3.3 General Definitions **13R–** 6

Chapter 4 General Requirements **13R–** 7
4.1 Sprinklered Throughout **13R–** 7
4.2 Compartments **13R–** 7
4.3 Basic Requirements **13R–** 7
4.4 Tube **13R–** 7
4.5 Listed or Labeled **13R–** 7

Chapter 5 System Components **13R–** 8
5.1 General **13R–** 8
5.2 Piping **13R–** 9
5.3 System Types **13R–**11

Chapter 6 Working Plans, Design, Installation, Acceptance Tests, and Maintenance **13R–**11
6.1 General System Requirements **13R–**11
6.2 Working Plans **13R–**12
6.3 Approval of Sprinkler Systems **13R–**12
6.4 Acceptance Tests **13R–**12
6.5 Design and Installation **13R–**12
6.6 Water Supply **13R–**15
6.7 Installation of System Components **13R–**15
6.8 System Design **13R–**17
6.9 Location of Sprinklers **13R–**20
6.10 Maintenance **13R–**21

Annex A Explanatory Material **13R–**21

Annex B Informational References **13R–**30

Index **13R–**31

Copyright National Fire Protection Association
Provided by IHS under license with NFPA
No reproduction or networking permitted without license from IHS
Not for Resale

NFPA 13R

Standard for the

Installation of Sprinkler Systems in Residential Occupancies up to and Including Four Stories in Height

2007 Edition

IMPORTANT NOTE: This NFPA document is made available for use subject to important notices and legal disclaimers. These notices and disclaimers appear in all publications containing this document and may be found under the heading "Important Notices and Disclaimers Concerning NFPA Documents." They can also be obtained on request from NFPA or viewed at www.nfpa.org/disclaimers.

NOTICE: An asterisk (*) following the number or letter designating a paragraph indicates that explanatory material on the paragraph can be found in Annex A.

Changes other than editorial are indicated by a vertical rule beside the paragraph, table, or figure in which the change occurred. These rules are included as an aid to the user in identifying changes from the previous edition. Where one or more complete paragraphs have been deleted, the deletion is indicated by a bullet (•) between the paragraphs that remain.

Information on referenced publications can be found in Chapter 2 and Annex B.

Chapter 1 Administration

1.1* Scope. This standard shall cover the design and installation of automatic sprinkler systems for protection against fire hazards in residential occupancies up to and including four stories in height.

1.2* Purpose. The purpose of this standard shall be to provide design and installation requirements for a sprinkler system to aid in the detection and control of fires in residential occupancies and thus provide improved protection against injury, life loss, and property damage. A sprinkler system designed and installed in accordance with this standard shall be expected to prevent flashover (total involvement) in the room of fire origin, where sprinklered, and to improve the chance for occupants to escape or be evacuated.

1.3 Retroactivity. The provisions of this standard reflect a consensus of what is necessary to provide an acceptable degree of protection from the hazards addressed in this standard at the time the standard was issued. Unless otherwise specified, the provisions of this standard shall not apply to facilities, equipment, structures, or installations that existed or were approved for construction or installation prior to the effective date of the standard. Where specified, the provisions of this standard shall be retroactive. In those cases where the authority having jurisdiction determines that the existing situation presents an unacceptable degree of risk, the authority having jurisdiction shall be permitted to apply retroactively any portions of this standard deemed appropriate. The retroactive requirements of this standard shall be permitted to be modified if their application clearly would be impractical in the judgment of the authority having jurisdiction, and only where it is clearly evident that a reasonable degree of safety is provided.

1.4 Equivalency. Nothing in this standard is intended to restrict new technologies or alternative arrangements, provided that the level of safety prescribed by the standard is not reduced.

1.5 Units.

1.5.1* Metric units of measurement in this standard shall be in accordance with the modernized metric system known as the International System of Units (SI).

1.5.2 The liter and bar units shall be permitted to be used in this standard.

1.5.3 The conversion factors for liter, pascal, and bar shall be in accordance with Table 1.5.3.

Table 1.5.3 Metric Conversions

Name of Unit	Unit Symbol	Conversion Factor
liter	L	1 gal = 3.785 L
pascal	Pa	1 psi = 6894.757 Pa
bar	bar	1 psi = 0.0689 bar
bar	bar	1 bar = 10^5 Pa

1.5.4* Where a value for measurement as specified in this standard is followed by an equivalent value in other units, the first stated value shall be regarded as the requirement.

1.5.5 The equivalent value for a measurement in SI shall be converted by multiplying the value by the conversion factor and then rounding the result to the appropriate number of significant digits.

Chapter 2 Referenced Publications

2.1 General. The documents or portions thereof listed in this chapter are referenced within this standard and shall be considered part of the requirements of this document.

2.2 NFPA Publications. National Fire Protection Association, 1 Batterymarch Park, Quincy, MA 02169-7471.

NFPA 13, *Standard for the Installation of Sprinkler Systems,* 2007 edition.

NFPA 20, *Standard for the Installation of Stationary Pumps for Fire Protection,* 2007 edition.

NFPA 22, *Standard for Water Tanks for Private Fire Protection,* 2003 edition.

NFPA 25, *Standard for the Inspection, Testing, and Maintenance of Water-Based Fire Protection Systems,* 2002 edition.

NFPA *101®*, *Life Safety Code®,* 2006 edition.

NFPA 220, *Standard on Types of Building Construction,* 2006 edition.

NFPA 251, *Standard Methods of Tests of Fire Resistance of Building Construction and Materials,* 2006 edition.

2.3 Other Publications.

2.3.1 ANSI Publications. American National Standards Institute, Inc., 25 West 43rd Street, 4th Floor, New York, NY 10036.

ANSI A17.1, *Safety Code for Elevators and Escalators,* 2004.

ANSI B36.10M, *Welded and Seamless Wrought Steel Pipe,* 1996.

Copyright National Fire Protection Association
Provided by IHS under license with NFPA
No reproduction or networking permitted without license from IHS
Not for Resale

2.3.2 ASME Publications. American Society of Mechanical Engineers, Three Park Avenue, New York, NY 10016-5990.

ASME B16.1, *Cast Iron Pipe Flanges and Flanged Fittings*, 1989.

ASME B16.3, *Malleable Iron Threaded Fittings*, 1992.

ASME B16.4, *Gray Iron Threaded Fittings*, 1992.

ASME B16.5, *Pipe Flanges and Flanged Fittings*, 1996.

ASME B16.9, *Factory-Made Wrought Steel Buttwelding Fittings*, 1993.

ASME B16.11, *Forged Fittings, Socket-Welding and Threaded*, 1996.

ASME B16.18, *Cast Copper Alloy Solder Joint Pressure Fittings*, 1984.

ASME B16.22, *Wrought Copper and Copper Alloy Solder Joint Pressure Fittings*, 1995.

ASME B16.25, *Buttwelding Ends*, 1997.

2.3.3 ASTM Publications. ASTM International, 100 Barr Harbor Drive, P.O. Box C700, West Conshohocken, PA 19428-2959.

ASTM A 53, *Standard Specification for Pipe, Steel, Black and Hot-Dipped, Zinc-Coated, Welded and Seamless*, 1998.

ASTM A 135, *Standard Specification for Electric-Resistance-Welded Steel Pipe*, 1997.

ASTM A 234, *Standard Specification for Piping Fittings of Wrought Carbon Steel and Alloy Steel for Moderate and Elevated Temperatures*, 1997.

ASTM A 795, *Standard Specification for Black and Hot-Dipped Zinc-Coated (Galvanized) Welded and Seamless Steel Pipe for Fire Protection Use*, 1997.

ASTM B 32, *Standard Specification for Solder Metal*, 1996.

ASTM B 88, *Standard Specification for Seamless Copper Water Tube*, 1996.

ASTM B 251, *Standard Specification for General Requirements for Wrought Seamless Copper and Copper-Alloy Tube*, 1997.

ASTM B 813, *Standard Specification for Liquid and Paste Fluxes for Soldering Applications of Copper and Copper-Alloy Tube*, 1993.

ASTM F 437, *Standard Specification for Threaded Chlorinated Poly (Vinyl Chloride) (CPVC) Plastic Pipe Fittings, Schedule 80*, 1996.

ASTM F 438, *Standard Specification for Socket-Type Chlorinated Poly (Vinyl Chloride) (CPVC) Plastic Pipe Fittings, Schedule 40*, 1997.

ASTM F 439, *Standard Specification for Socket-Type Chlorinated Poly (Vinyl Chloride) (CPVC) Plastic Pipe Fittings, Schedule 80*, 1997.

ASTM F 442, *Standard Specification for Chlorinated Poly (Vinyl Chloride) (CPVC) Plastic Pipe (SDR-PR)*, 1997.

2.3.4 AWS Publications. American Welding Society, 550 N.W. LeJeune Road, Miami, FL 33126.

AWS A5.8, *Specification for Filler Metals for Brazing and Braze Welding*, 1992.

2.3.5 Other Publications.

Merriam-Webster's Collegiate Dictionary, 11th edition, Merriam-Webster, Inc., Springfield, MA, 2003.

2.4 References for Extracts in Mandatory Sections. (Reserved)

Chapter 3 Definitions

3.1 General. The definitions contained in this chapter shall apply to the terms used in this standard. Where terms are not defined in this chapter or within another chapter, they shall be defined using their ordinarily accepted meanings within the context in which they are used. *Merriam-Webster's Collegiate Dictionary*, 11th edition, shall be the source for the ordinarily accepted meaning.

3.2 NFPA Official Definitions.

3.2.1* Approved. Acceptable to the authority having jurisdiction.

3.2.2* Authority Having Jurisdiction (AHJ). An organization, office, or individual responsible for enforcing the requirements of a code or standard, or for approving equipment, materials, an installation, or a procedure.

3.2.3 Labeled. Equipment or materials to which has been attached a label, symbol, or other identifying mark of an organization that is acceptable to the authority having jurisdiction and concerned with product evaluation, that maintains periodic inspection of production of labeled equipment or materials, and by whose labeling the manufacturer indicates compliance with appropriate standards or performance in a specified manner.

3.2.4* Listed. Equipment, materials, or services included in a list published by an organization that is acceptable to the authority having jurisdiction and concerned with evaluation of products or services, that maintains periodic inspection of production of listed equipment or materials or periodic evaluation of services, and whose listing states that either the equipment, material, or service meets appropriate designated standards or has been tested and found suitable for a specified purpose.

3.2.5 Shall. Indicates a mandatory requirement.

3.2.6 Standard. A document, the main text of which contains only mandatory provisions using the word "shall" to indicate requirements and which is in a form generally suitable for mandatory reference by another standard or code or for adoption into law. Nonmandatory provisions shall be located in an appendix or annex, footnote, or fine-print note and are not to be considered a part of the requirements of a standard.

3.3 General Definitions.

3.3.1* Bathroom. Within a dwelling unit, any room or compartment containing a lavatory dedicated to personal hygiene, or a water closet, or bathing capability such as a shower or tub, or any combination of facilities thereof.

3.3.2 Compartment. See Section 4.2.

3.3.3 Design Discharge. The rate of water discharged by an automatic sprinkler, expressed in gpm (mm/min).

3.3.4 Dwelling Unit. One or more rooms, arranged for the use of one or more individuals living together, as in a single housekeeping unit, that normally have cooking, living, sanitary, and sleeping facilities.

3.3.5 Hazard Classifications.

3.3.5.1* *Light Hazard Occupancy.* Occupancies or portions of other occupancies where the quantity and/or combustibility of contents is low and fires with relatively low rates of heat release are expected.

Copyright National Fire Protection Association
Provided by IHS under license with NFPA
No reproduction or networking permitted without license from IHS
Not for Resale

3.3.5.2* *Ordinary Hazard (Group 1).* Occupancies or portions of other occupancies where combustibility is low, quantity of combustibles is moderate, stockpiles of combustibles do not exceed 8 ft (2.4 m), and fires with moderate rates of heat release are expected.

3.3.5.3* *Ordinary Hazard (Group 2).* Occupancies or portions of other occupancies where the quantity and combustibility of contents are moderate to high, where stockpiles of contents with moderate rates of heat release do not exceed 12 ft (3.7 m) and stockpile of contents with high rates of heat release do not exceed 8 ft (2.4 m).

3.3.6 Residential Occupancies. Occupancies, as specified in the scope of this standard, that include the following, as defined in NFPA *101, Life Safety Code*: (1) apartment buildings, (2) lodging and rooming houses, (3) board and care facilities, and (4) hotels, motels, and dormitories.

3.3.7 Sprinkler.

3.3.7.1 *Automatic Sprinkler.* A fire suppression or control device that operates automatically when its heat-actuated element is heated to its thermal rating or above, allowing water to discharge over a specific area.

3.3.7.2 *Residential Sprinkler.* A type of fast-response sprinkler having a thermal element with an RTI of 50 $(\text{meters-seconds})^{1/2}$ or less, that has been specifically investigated for its ability to enhance survivability in the room of fire origin, and is listed for use in the protection of dwelling units.

3.3.8 Sprinkler System. For fire protection purposes, an integrated system of underground and overhead piping designed in accordance with fire protection engineering standards. The installation includes one or more automatic water supplies. The portion of the sprinkler system aboveground is a network of specially sized or hydraulically designed piping installed in a building, structure, or area, generally overhead, and to which sprinklers are attached in a systematic pattern. The valve controlling each system riser is located in the system riser or its supply piping. Each sprinkler system riser includes a device for actuating an alarm when the system is in operation. The system is usually activated by heat from a fire and discharges water over the fire area.

3.3.8.1 *Dry Pipe Sprinkler System.* A sprinkler system employing automatic sprinklers that are attached to a piping system that contains air or nitrogen under pressure, the release of which (as from the opening of a sprinkler) permits the water pressure to open a valve known as a dry pipe valve, and the water then flows into the piping system and out the opened sprinkler.

3.3.8.2 *Preaction Sprinkler System.* A sprinkler system employing automatic sprinklers that are attached to a piping system containing air that might or might not be under pressure, with a supplemental detection system installed in the same areas as the sprinklers.

3.3.8.3 *Wet Pipe Sprinkler System.* A sprinkler system employing automatic sprinklers attached to a piping system containing water and connected to a water supply so that water discharges immediately from sprinklers opened by heat from a fire.

3.3.9 System Working Pressure. The maximum anticipated static (nonflowing) or flowing pressure applied to sprinkler system components exclusive of surge pressures.

3.3.10 Thermal Barrier. A material that limits the average temperature rise of an unexposed surface to not more than 250°F (121°C) for a specified fire exposure complying with the standard time–temperature curve of NFPA 251, *Standard Methods of Tests of Fire Resistance of Building Construction and Materials.*

3.3.11 Valve.

3.3.11.1 *Check Valve.* A valve that allows flow in one direction only.

3.3.11.2 *Control Valve.* An indicating valve employed to control (shut) a supply of water to a sprinkler system.

3.3.12 Waterflow Alarm. A sounding device activated by a waterflow detector or alarm check valve.

3.3.13 Waterflow Detector. An electric signaling indicator or alarm check valve actuated by waterflow in one direction only.

Chapter 4 General Requirements

4.1 Sprinklered Throughout. A building provided with a fire sprinkler system designed and installed in accordance with the requirements of this standard, including its allowable omissions, shall be considered fully sprinklered throughout.

4.2 Compartments.

4.2.1 A compartment, for the purposes of this standard, shall be a space that is completely enclosed by walls and a ceiling.

4.2.2 Compartment. A space completely enclosed by walls and a ceiling. The compartment enclosure is permitted to have openings in walls to an adjoining space if the openings have a minimum lintel depth of 8 in. (203 mm) from the ceiling and the openings do not exceed 8 ft (2.4 m) in width. A single opening of 36 in. (914 mm) or less in width without a lintel is permitted when there are no other openings to adjoining spaces.

4.3 Basic Requirements.

4.3.1 The requirements for spacing, location, and position of sprinklers shall be based on the following principles:

(1) Sprinklers shall be installed throughout the premises.
(2) Sprinklers shall be located so as not to exceed maximum protection area per sprinkler.
(3) Sprinklers shall be positioned and located so as to provide satisfactory performance with respect to activation time and distribution.
(4) Sprinklers shall be permitted to be omitted from areas specifically allowed by this standard *(see Section 6.9).*
(5) When sprinklers are specifically tested and test results demonstrate that deviations from clearance requirements to structural members do not impair the ability of the sprinkler to control or suppress a fire, their positioning and locating in accordance with the test results shall be permitted.
(6) Clearance between sprinklers and ceilings exceeding the maximums specified in this standard shall be permitted, provided that tests or calculations demonstrate comparable sensitivity and performance of the sprinklers to those installed in conformance with these sections.

4.4 Tube. Wherever the word *pipe* is used in this standard, it shall also mean *tube.*

4.5 Listed or Labeled. Listed or labeled devices and materials shall be installed and used in accordance with the listing limitations and the manufacturers' instructions unless permitted by other sections of this document.

Copyright National Fire Protection Association
Provided by IHS under license with NFPA
No reproduction or networking permitted without license from IHS
Not for Resale

Chapter 5 System Components

5.1 General.

5.1.1 Sprinklers.

5.1.1.1* Only new listed sprinklers shall be installed in sprinkler systems.

5.1.1.2* Sprinkler Identification.

5.1.1.2.1 All sprinklers shall be permanently marked with a one- or two-character manufacturer symbol, followed by three or four numbers, so as to identify a unique sprinkler identification for every change in orifice size or shape, deflector characteristic, pressure rating, and thermal sensitivity.

5.1.1.3 Sprinkler Discharge Characteristics.

5.1.1.3.1 General. Unless the requirements of 5.1.1.3.2 or 5.1.1.3.3 are met, the K-factor, relative discharge, and marking identification for sprinklers having different orifice sizes shall be in accordance with Table 5.1.1.3.1.

5.1.1.3.2 Pipe Threads. Listed sprinklers having pipe threads different from those shown in Table 5.1.1.3.1 shall be permitted.

5.1.1.3.3 Residential Sprinklers. Residential sprinklers shall be permitted with K-factors other than those specified in Table 5.1.1.3.1.

5.1.1.4 Occupancy Limitations. Unless the requirements of 5.1.1.4.1 or 5.1.1.4.2 are met, sprinklers shall not be listed for protection of a portion of an occupancy classification.

5.1.1.4.1 Residential Sprinklers. Residential sprinklers shall be permitted to be listed for portions of residential occupancies.

5.1.1.4.2 Special Sprinklers. Special sprinklers shall be permitted to be listed for protection of a specific construction feature in a portion of an occupancy classification where such sprinklers meet 5.1.1.4.3 and have been evaluated and listed for performance under the following conditions:

(1) Fire tests related to the intended hazard
(2) Distribution of the spray pattern with respect to wetting of floors and walls
(3) Distribution of the spray pattern with respect to obstructions
(4) Evaluation of the thermal sensitivity of the sprinkler
(5) Performance under horizontal or sloped ceilings
(6) Area of design

5.1.1.4.3 Special sprinklers shall maintain the following characteristics:

(1) Orifice size shall be in accordance with 5.1.1.3.
(2) Temperature ratings shall be in accordance with Table 5.1.1.5.1.
(3) The protection area of coverage shall not exceed 400 ft^2 (37 m^2) for light hazard and ordinary hazard occupancies.

5.1.1.5* Temperature Characteristics.

5.1.1.5.1 Automatic sprinklers shall have their frame arms, deflector, coating material, or liquid bulb colored in accordance with the requirements of Table 5.1.1.5.1 or the requirements of 5.1.1.5.2, 5.1.1.5.3, 5.1.1.5.4, or 5.1.1.5.5.

5.1.1.5.2 A dot on the top of the deflector, the color of the coating material, or colored frame arms shall be permitted for color identification of corrosion-resistant sprinklers.

5.1.1.5.3 Color identification shall not be required for ornamental sprinklers such as factory-plated or factory-painted sprinklers or for recessed, flush, or concealed sprinklers.

5.1.1.5.4 The frame arms of bulb-type sprinklers shall not be required to be color coded.

5.1.1.5.5 The liquid in bulb-type sprinklers shall be color coded in accordance with Table 5.1.1.5.1.

5.1.1.6 Escutcheons and Cover Plates.

5.1.1.6.1 Nonmetallic escutcheons shall be listed.

5.1.1.6.2* Escutcheons used with recessed, flush-type, or concealed sprinklers shall be part of a listed sprinkler assembly.

Table 5.1.1.3.1 Sprinkler Discharge Characteristics Identification

Nominal K-factor [gpm/(psi)$^{1/2}$]	K-factor Range [gpm/(psi)$^{1/2}$]	K-factor Range [dm^3/min/(kPa)$^{1/2}$]	Percent of Nominal K-5.6 Discharge	Thread Type (in. NPT)
1.4	1.3–1.5	1.9–2.2	25	½
1.9	1.8–2.0	2.6–2.9	33.3	½
2.8	2.6–2.9	3.8–4.2	50	½
4.2	4.0–4.4	5.9–6.4	75	½
5.6	5.3–5.8	7.6–8.4	100	½
8.0	7.4–8.2	10.7–11.8	140	¾ or ½
11.2	11.0–11.5	15.9–16.6	200	½ or ¾
14.0	13.5–14.5	19.5–20.9	250	¾
16.8	16.0–17.6	23.1–25.4	300	¾
19.6	18.6–20.6	27.2–30.1	350	1
22.4	21.3–23.5	31.1–34.3	400	1
25.2	23.9–26.5	34.9–38.7	450	1
28.0	26.6–29.4	38.9–43.0	500	1

Copyright National Fire Protection Association
Provided by IHS under license with NFPA
No reproduction or networking permitted without license from IHS
Not for Resale

Table 5.1.1.5.1 Temperature Ratings, Classifications, and Color Codings

Maximum Ceiling Temperature		Temperature Rating		Temperature Classification	Color Code	Glass Bulb Colors
°F	°C	°F	°C			
100	38	135–170	57–77	Ordinary	Uncolored or black	Orange or red
150	66	175–225	79–107	Intermediate	White	Yellow or green
225	107	250–300	121–149	High	Blue	Blue
300	149	325–375	163–191	Extra high	Red	Purple
375	191	400–475	204–246	Very extra high	Green	Black
475	246	500–575	260–302	Ultra high	Orange	Black
625	329	650	343	Ultra high	Orange	Black

5.1.1.6.3 Cover plates used with concealed sprinklers shall be part of the listed sprinkler assembly.

5.1.1.7 Painting and Finish. Sprinkler painting and finish material shall only be permitted in accordance with NFPA 13, *Standard for the Installation of Sprinkler Systems.*

5.1.1.8 Protective Caps and Straps.

5.1.1.8.1* Protective caps and straps shall be removed using means that are in accordance with the manufacturer's instructions.

5.1.1.8.2* Protective caps and straps shall be removed from all sprinklers prior to the time when the sprinkler system is placed in service.

5.1.1.8.3 Protective caps and straps on all upright sprinklers or on any sprinklers installed more than 10 ft (3 m) above the floor shall be permitted to be removed from sprinklers immediately following their installation.

5.1.2 Listing. Only listed or approved devices and materials as specified in this standard shall be used in sprinkler systems.

5.1.3 Rated Pressure. System components shall be rated for the maximum system working pressure to which they are exposed but shall not be rated at less than 175 psi (12.1 bar) for components installed aboveground and 150 psi (10.4 bar) for components installed underground between the water supply and the system riser.

5.1.4 Reconditioned Equipment.

5.1.4.1 The use of reconditioned valves and devices as replacement equipment in existing systems shall be permitted.

5.1.4.2 Reconditioned sprinklers shall not be permitted to be utilized on any new or existing system.

5.2 Piping.

5.2.1* Pipe or tube used in sprinkler systems shall be of the materials specified in Table 5.2.1 or in accordance with 5.2.2.

5.2.1.1 The chemical properties, physical properties, and dimensions of pipe materials shall be at least equivalent to the standards cited in Table 5.2.1.

5.2.1.2 Pipe shall be designed to withstand a working pressure of not less than 175 psi (12.1 bar).

Table 5.2.1 Pipe or Tube Materials and Dimensions

Materials and Dimensions	Standard
Specification for Black and Hot-Dipped Zinc-Coated (Galvanized) Welded and Seamless Steel Pipe for Fire Protection Use	ASTM A 795
Specification for Welded and Seamless Pipe	ASTM A 53
Wrought Steel Pipe	ANSI B36.10M
Specification for Electric-Resistance-Welded Steel Pipe	ASTM A 135
Specification for Seamless Copper Water Tube [Copper Tube (Drawn, Seamless)]	ASTM B 88
Specification for General Requirements for Wrought Seamless Copper and Copper-Alloy Tube	ASTM B 251
Fluxes for Soldering Applications of Copper and Copper-Alloy Tube	ASTM B 813
Specification for Filler Metals for Brazing and Braze Welding (Classification BCuP-3 or BCuP-4)	AWS A5.8
Specification for Solder Metal Section 1: Solder Alloys Containing Less than 0.2 percent lead (Pb) as identified in ASTM B 32, Table 5, Section 1, and having a solidus temperature that exceeds 400°F (204°C)	ASTM B 32

5.2.1.3 When nonmetallic pipe is used, the pipe shall be designed to withstand a working pressure of not less than 175 psi (12.1 bar) at 120°F (49°C).

5.2.2 Types of pipe other than those specified in Table 5.2.1 shall be permitted to be used where listed for sprinkler system use.

5.2.2.1 Pipe differing from those specified in Table 5.2.1 shall be installed in accordance with their listings and the manufacturers' installation instructions.

5.2.2.2* Chlorinated polyvinyl chloride (CPVC) pipe shall comply with the portions of the American Society for Testing and Materials (ASTM) standards specified in Table 5.2.2.2 that apply to fire protection service.

Copyright National Fire Protection Association
Provided by IHS under license with NFPA
No reproduction or networking permitted without license from IHS
Not for Resale

Table 5.2.2.2 Specially Listed Pipe or Tube Materials and Dimensions

Materials and Dimensions	Standard
Nonmetallic Piping	
Specification for Chlorinated Polyvinyl Chloride (CPVC) Pipe	ASTM F 442

5.2.2.3 Pipe or tube listed for light hazard occupancies shall be permitted to be installed in ordinary hazard rooms of otherwise light hazard occupancies where the room does not exceed 400 ft^2 (37 m^2).

5.2.3 Pipe having a wall thickness less than that of Schedule 30 pipe shall not be joined by fittings utilizing cut grooves where the pipe is 8 in. (203 mm) nominal or larger in size.

5.2.4 Pipe having a wall thickness less than that of Schedule 40 pipe shall not be joined by fittings utilizing cut grooves where the pipe is less than 8 in. (203 mm) nominal in size.

5.2.5 Pipe joined with mechanical fittings using cut or rolled grooves shall be joined by a listed combination of fittings, gaskets, and grooves.

5.2.6 Grooves cut or rolled on pipe shall be dimensionally compatible with the fittings.

5.2.7 Fittings used in sprinkler systems shall be of the materials listed in Table 5.2.7 or in accordance with 5.2.10.

5.2.7.1 The chemical properties, physical properties, and dimensions of fitting materials shall be at least equivalent to the standards cited in Table 5.2.7.

Table 5.2.7 Fitting Materials and Dimensions

Materials and Dimensions	Standard
Cast Iron	
Cast Iron and Threaded Fittings (Class 125 and 250)	ASME B16.4
Cast Iron Pipe Flanges and Flanged Fittings	ASME B16.1
Malleable Iron	
Malleable Iron Threaded Fittings	ASME B16.3
Steel	
Factory-Made Wrought Steel Buttwelding Fittings	ASME B16.9
Buttwelding Ends	ASME B16.25
Specification for Piping Fittings of Wrought Carbon Steel and Alloy Steel for Moderate and Elevated Temperatures	ASTM A 234
Pipe Flanges and Flanged Fittings (Nickel Alloy and Other Special Alloys)	ASME B16.5
Forged Fittings, Socket-Welding and Threaded	ASME B16.11
Copper	
Wrought Copper and Copper Alloy Solder Joint Pressure Fittings	ASME B16.22
Cast Copper Alloy Solder Joint Pressure Fittings	ASME B16.18

5.2.7.2 Fittings used in sprinkler systems shall be designed to withstand a working pressure of not less than 175 psi (12.1 bar).

5.2.7.3 When nonmetallic fittings are used, the fittings shall be designed to withstand a working pressure of not less than 175 psi (12.1 bar) at 120°F (49°C).

5.2.8 Joints for the connection of copper pipe shall be brazed on dry pipe and preaction systems.

5.2.9 Joints for the connection of copper pipe for wet systems shall use solder joints with 95-5 solder metal or be brazed.

5.2.10 Types of fittings other than those specified in Table 5.2.7 shall be permitted to be used where listed for sprinkler system use.

5.2.10.1 Fittings differing from those specified in Table 5.2.7 shall be installed in accordance with their listings and the manufacturers' installation instructions.

5.2.10.2* Chlorinated polyvinyl chloride (CPVC) shall comply with the portions of the American Society for Testing and Materials (ASTM) standards specified in Table 5.2.10.2 that apply to fire protection service.

Table 5.2.10.2 Specially Listed Fittings and Dimensions

Materials and Dimensions	Standard
Specification for Schedule 80 CPVC Threaded Fittings	ASTM F 437
Specification for Schedule 40 CPVC Socket-Type Fittings	ASTM F 438
Specification for Schedule 80 CPVC Socket-Type Fittings	ASTM F 439

5.2.11 Welded pipe and fittings shall be permitted to be used in accordance with the rules of NFPA 13, *Standard for the Installation of Sprinkler Systems.*

5.2.12 Valves.

5.2.12.1 General.

5.2.12.1.1 Valve Pressure Requirements. When water pressures exceed 175 psi (12.1 bar), valves shall be used in accordance with their pressure ratings.

5.2.12.1.2 Valve Closure Time. Unless the requirements of 6.7.1.5 apply, listed indicating valves shall not close in less than 5 seconds when operated at maximum possible speed from the fully open position.

5.2.12.1.3 Listed Indicating Valves. Unless the requirements of 5.2.12.1.3.1, 5.2.12.1.3.2, or 5.2.12.1.3.3 are met, all valves controlling connections to water supplies and to supply pipes to sprinklers shall be listed indicating valves.

5.2.12.1.3.1 A listed underground gate valve equipped with a listed indicator post shall be permitted.

5.2.12.1.3.2 A listed water control valve assembly with a reliable position indication connected to a remote supervisory station shall be permitted.

5.2.12.1.3.3 A nonindicating valve, such as an underground gate valve with approved roadway box, complete with T-wrench, and where accepted by the authority having jurisdiction, shall be permitted.

Copyright National Fire Protection Association
Provided by IHS under license with NFPA
No reproduction or networking permitted without license from IHS
Not for Resale

5.2.12.2 Wafer-Type Valves. Wafer-type valves with components that extend beyond the valve body shall be installed in a manner that does not interfere with the operation of any system components.

5.2.12.3 Drain Valves and Test Valves. Drain valves and test valves shall be approved.

5.2.12.4* Identification of Valves.

5.2.12.4.1 All control, drain, and test connection valves shall be provided with permanently marked weatherproof metal or rigid plastic identification signs.

5.2.12.4.2 The identification sign shall be secured with corrosion-resistant wire, chain, or other approved means.

5.2.12.4.3 The control valve sign shall identify the portion of the building served.

5.2.12.4.4* Systems that have more than one control valve that must be closed to work on a system or space shall have a sign referring to the existence and location of other valves.

5.2.13 Gauges.

5.2.13.1 A pressure gauge with a connection not smaller than ¼ in. (6.4 mm) shall be installed at the system main drain, at each main drain associated with a floor control valve, and on the inlet and outlet side of each pressure-reducing valve.

5.2.13.2 Each gauge connection shall be equipped with a shutoff valve and provisions for draining.

5.2.13.3 The required pressure gauges shall be listed and shall have a maximum limit not less than twice the normal system working pressure at the point where installed.

5.2.13.4 Gauges shall be installed to permit removal and shall be located where they will not be subject to freezing.

5.3 System Types.

5.3.1 A wet pipe system shall be used where piping is installed in areas that can be maintained reliably above 40°F (4°C).

5.3.2* Piping in areas that cannot be maintained reliably above 40°F (4°C) shall be protected by use of one of the following methods:

(1)*Antifreeze system
(2) Dry pipe system
(3) Preaction system
(4) Listed standard dry-pendent, dry-upright, or dry-sidewall sprinklers extended from pipe in heated areas

5.3.3 Where antifreeze systems, dry pipe systems, and preaction systems are installed, they shall be installed in accordance with NFPA 13, *Standard for the Installation of Sprinkler Systems.*

Chapter 6 Working Plans, Design, Installation, Acceptance Tests, and Maintenance

6.1 General System Requirements.

6.1.1 System Protection Area Limitations.

6.1.1.1 The maximum floor area on any one floor to be protected by sprinklers supplied by any one sprinkler system riser or combined system riser shall not exceed 52,000 ft^2 (4831 m^2).

6.1.1.2 The floor area occupied by mezzanines shall not be included in the area limits of 6.1.1.1.

6.1.2 Return Bends.

6.1.2.1 Unless the requirements of 6.1.2.2 or 6.1.2.3 are met, return bends shall be used where pendent sprinklers are supplied from a raw water source, a mill pond, or open-top reservoirs.

6.1.2.2 Return bends shall be connected to the top of branch lines in order to avoid accumulation of sediment in the drop nipples in accordance with Figure 6.1.2.2.

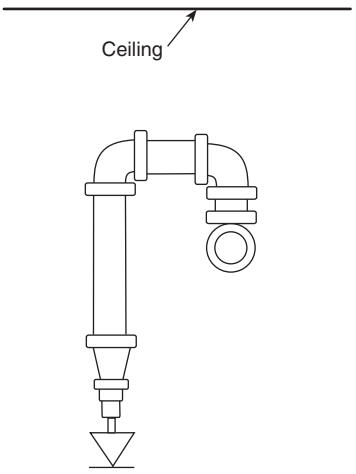

FIGURE 6.1.2.2 Return Bend Arrangement.

6.1.2.3 Return bends shall not be required where dry-pendent sprinklers are used.

6.1.3 Dry Pipe Underground.

6.1.3.1 Where necessary to place pipe that will be under air pressure underground, the pipe shall be protected against corrosion.

6.1.3.2 Unprotected cast-iron or ductile-iron pipe shall be permitted where joined with a gasketed joint listed for air service underground.

6.1.4 Protection of Piping.

6.1.4.1 Protection of Piping Against Freezing.

6.1.4.1.1 See 5.3.2 for protection of pipe from freezing.

6.1.4.1.2* Where aboveground water-filled supply pipes, risers, system risers, or feed mains pass through open areas, cold rooms, passageways, or other areas exposed to freezing temperatures, the pipe shall be protected against freezing by insulating coverings, frostproof casings, or other reliable means capable of maintaining a minimum temperature between 40°F (4°C) and 120°F (48.9°C).

6.1.4.2 Protection of Piping Against Corrosion.

6.1.4.2.1 Where corrosive conditions are known to exist due to moisture or fumes from corrosive chemicals, or both, special types of fittings, pipes, and hangers that resist corrosion shall be used, or a protective coating shall be applied to all unprotected exposed surfaces of the sprinkler system.

Copyright National Fire Protection Association
Provided by IHS under license with NFPA
No reproduction or networking permitted without license from IHS
Not for Resale

6.1.4.2.2 Where water supplies are known to have unusual corrosive properties and threaded or cut-groove steel pipe is to be used, wall thickness shall be in accordance with Schedule 30 [in sizes 8 in. (200 mm) or larger] or Schedule 40 [in sizes less than 8 in. (200 mm)].

6.1.4.2.3 Where corrosive conditions exist or piping is exposed to the weather, corrosion-resistant types of pipe, fittings, and hangers or protective corrosion-resistant coatings shall be used.

6.1.4.2.4 Where steel pipe is used underground, the pipe shall be protected against corrosion.

6.1.4.3 Protection of Piping in Hazardous Areas.

6.1.4.3.1 Private service main aboveground piping shall not pass through hazardous areas and shall be located so that it is protected from mechanical and fire damage.

6.1.4.3.2 Private service main aboveground piping shall be permitted to be located in hazardous areas protected by an automatic sprinkler system.

6.1.4.4 Protection of Risers Subject to Mechanical Damage. Sprinkler risers subject to mechanical damage shall be protected by steel posts, concrete barriers, or other approved means.

6.2 Working Plans.

6.2.1 Working plans shall be submitted for approval to the authority having jurisdiction before any equipment is installed or remodeled.

6.2.2 Deviations from approved plans shall require permission of the authority having jurisdiction.

6.2.3 Working plans shall be drawn to a specified scale.

6.2.4 Sprinkler plans shall be drawn on sheets of uniform size.

6.2.5 Sprinkler plans shall provide a plan of each floor.

6.2.6 Sprinkler plans shall be capable of being easily duplicated.

6.2.7 Sprinkler plans shall indicate the following:

(1) Name of owner and occupant
(2) Location, including street address
(3) Point of compass
(4) Ceiling construction
(5) Full height cross section
(6) Location of fire walls
(7) Location of partitions
(8) Occupancy of each area or room
(9) Location and size of concealed spaces, attics, closets, and bathrooms
(10) Any small enclosures in which no sprinklers are to be installed
(11) Size of the city main in the street; pressure; whether dead-end or circulating and, if dead-end, the direction and distance to the nearest circulating main; and the city main test results including elevation of the test hydrant
(12) Make, manufacturer, type, heat-response element, temperature rating, and nominal orifice size of the sprinkler
(13) Temperature rating and location of high-temperature sprinklers
(14) Number of sprinklers on each riser, per floor
(15) Kind and location of alarm bells
(16) Type of pipe and fittings
(17) Type of protection for nonmetallic pipe
(18)*Nominal pipe size with lengths shown to scale
(19) Location and size of riser nipples
(20) Types of fittings and joints and the locations of all welds and bends
(21) Types and locations of hangers, sleeves, and braces, and methods of securing sprinklers, where applicable
(22) All control valves, check valves, drain pipes, and test connections
(23) Underground pipe size, length, location, weight, material, and point of connection to the city main; type of valves, meters, and valve pits; and depth at which the top of the pipe is laid below grade
(24) In the case of hydraulically designed systems, the material to be included on the hydraulic data nameplate
(25) Name and address of the contractor

6.3 Approval of Sprinkler Systems.

6.3.1 The installer shall perform all required acceptance tests *(see Section 6.4)* prior to asking for approval of the installation.

6.3.2 The installer shall complete the contractor's material and test certificate(s) *(see Figure 6.3.2)* prior to asking for approval of the installation.

6.3.3 The installer shall forward the certificate(s) to the authority having jurisdiction prior to asking for approval of the installation.

6.3.4 Where the authority having jurisdiction is required to be present during the conducting of acceptance tests, the installer shall provide advance notification of the time and date the testing will be performed.

6.4 Acceptance Tests.

6.4.1* Flushing of Underground Connections.

6.4.1.1 Underground mains and lead-in connections to system risers shall be flushed before a connection is made to sprinkler piping.

6.4.1.2 The flushing operation shall be continued until the water issuing from the main is clear.

6.4.1.3 The flushing operation shall be performed at the hydraulically calculated water demand rate of the system.

6.4.1.4 The flushing operation shall be performed such that the disposal of water issuing from the test outlets does not damage the property.

6.4.2* Hydrostatic Pressure Tests.

6.4.2.1 Systems having more than 20 sprinklers or having a fire department connection shall pass a hydrostatic pressure test performed for the aboveground piping system in accordance with NFPA 13, *Standard for the Installation of Sprinkler Systems.*

6.4.2.2 Systems having both fewer than 20 sprinklers and no fire department connection shall pass a hydrostatic pressure test performed for the aboveground piping system at 50 psi higher than the maximum system pressure using the hydrostatic test procedure specified in NFPA 13, *Standard for the Installation of Sprinkler Systems.*

6.5 Design and Installation.

6.5.1 At least three spare sprinklers of each type, temperature rating, and orifice size used in the system shall be installed on the premises.

Copyright National Fire Protection Association
Provided by IHS under license with NFPA
No reproduction or networking permitted without license from IHS
Not for Resale

Contractor's Material and Test Certificate for Aboveground Piping

PROCEDURE

Upon completion of work, inspection and tests shall be made by the contractor's representative and witnessed by an owner's representative. All defects shall be corrected and system left in service before contractor's personnel finally leave the job.

A certificate shall be filled out and signed by both representatives. Copies shall be prepared for approving authorities, owners, and contractor. It is understood the owner's representative's signature in no way prejudices any claim against contractor for faulty material, poor workmanship, or failure to comply with approving authority's requirements or local ordinances.

Property name	Date
Property address	

Plans

Accepted by approving authorities (names)

Address

Installation conforms to accepted plans ☐ Yes ☐ No

Equipment used is approved ☐ Yes ☐ No

If no, explain deviations

Instructions

Has person in charge of fire equipment been instructed as to location of control valves and care and maintenance of this new equipment? ☐ Yes ☐ No

If no, explain

Have copies of the following been left on the premises? ☐ Yes ☐ No

1. System components instructions ☐ Yes ☐ No
2. Care and maintenance instructions ☐ Yes ☐ No
3. NFPA 25 ☐ Yes ☐ No

Location of system

Supplies buildings

Sprinklers

Make	Model	Year of manufacture	Orifice size	Quantity	Temperature rating

Pipe and fittings

Type of pipe _____

Type of fittings _____

Alarm valve or flow indicator

Alarm device			Maximum time to operate through test connection	
Type	Make	Model	Minutes	Seconds

Dry pipe operating test

Dry valve			Q. O. D.		
Make	Model	Serial no.	Make	Model	Serial no.

	Time to trip through test connection†		Water pressure	Air pressure	Trip point air pressure	Time water reached test outlet†		Alarm operated properly	
	Minutes	Seconds	psi	psi	psi	Minutes	Seconds	Yes	No
Without Q.O.D.									
With Q.O.D.									

If no, explain

† Measured from the time inspector's test connection is opened

© 2007 National Fire Protection Association

FIGURE 6.3.2 Contractor's Material and Test Certificate for Aboveground Piping.

Copyright National Fire Protection Association
Provided by IHS under license with NFPA
No reproduction or networking permitted without license from IHS
Not for Resale

Deluge and preaction valves

Operation ☐ Pneumatic ☐ Electric ☐ Hydraulic

Piping supervised ☐ Yes ☐ No | Detecting media supervised ☐ Yes ☐ No

Does valve operate from the manual trip, remote, or both control stations? ☐ Yes ☐ No

Is there an accessible facility in each circuit for testing? ☐ Yes ☐ No | If no, explain

Make	Model	Does each circuit operate supervision loss alarm?		Does each circuit operate valve release?		Maximum time to operate release	
		Yes	No	Yes	No	Minutes	Seconds

Pressure-reducing valve test

Location and floor	Make and model	Setting	Static pressure		Residual pressure (flowing)		Flow rate
			Inlet (psi)	Outlet (psi)	Inlet (psi)	Outlet (psi)	Flow (gpm)

Test description

Hydrostatic: Hydrostatic tests shall be made at not less than 200 psi (13.6 bar) for 2 hours or 50 psi (3.4 bar) above static pressure in excess of 150 psi (10.2 bar) for 2 hours. Differential dry-pipe valve clappers shall be left open during the test to prevent damage. All aboveground piping leakage shall be stopped.

Pneumatic: Establish 40 psi (2.7 bar) air pressure and measure drop, which shall not exceed 1½ psi (0.1 bar) in 24 hours. Test pressure tanks at normal water level and air pressure and measure air pressure drop, which shall not exceed 1½ psi (0.1 bar) in 24 hours.

Tests

All piping hydrostatically tested at _____ psi (___ bar) for ____ hours ☐ Yes ☐ No | If no, state reason

Dry piping pneumatically tested ☐ Yes ☐ No

Equipment operates properly ☐ Yes ☐ No

Do you certify as the sprinkler contractor that additives and corrosive chemicals, sodium silicate or derivatives of sodium silicate, brine, or other corrosive chemicals were not used for testing systems or stopping leaks? ☐ Yes ☐ No

Drain test | Reading of gauge located near water supply test connection: _____ psi (____ bar) | Residual pressure with valve in test connection open wide: _____ psi (____ bar)

Underground mains and lead-in connections to system risers flushed before connection made to sprinkler piping verified by a copy of the "Contractor's Material and Test Certificate for Underground Piping." ☐ Yes ☐ No | Other Explain

Flushed by installer of underground sprinkler piping ☐ Yes ☐ No

If powder-driven fasteners are used in concrete, has representative sample testing been satisfactorily completed? ☐ Yes ☐ No | If no, explain

Blank testing gaskets

Number used	Locations	Number removed

Welding

Welding piping ☐ Yes ☐ No

If yes . . .

Do you certify as the sprinkler contractor that welding procedures comply with the requirements of at least AWS B2.1? ☐ Yes ☐ No

Do you certify that the welding was performed by welders qualified in compliance with the requirements of at least AWS B2.1? ☐ Yes ☐ No

Do you certify that the welding was carried out in compliance with a documented quality control procedure to ensure that all discs are retrieved, that openings in piping are smooth, that slag and other welding residue are removed, and that the internal diameters of piping are not penetrated? ☐ Yes ☐ No

Cutouts (discs)

Do you certify that you have a control feature to ensure that all cutouts (discs) are retrieved? ☐ Yes ☐ No

© 2007 National Fire Protection Association NFPA 13R (p. 2 of 3)

FIGURE 6.3.2 ***Continued***

Copyright National Fire Protection Association
Provided by IHS under license with NFPA
No reproduction or networking permitted without license from IHS
Not for Resale

Hydraulic data nameplate	Nameplate provided ☐ Yes ☐ No	If no, explain
Remarks	Date left in service with all control valves open	
Signatures	Name of sprinkler contractor	
	Tests witnessed by	
	For property owner (signed)	Title / Date
	For sprinkler contractor (signed)	Title / Date
Additional explanations and notes		

© 2007 National Fire Protection Association NFPA 13R (p. 3 of 3)

FIGURE 6.3.2 ***Continued***

6.5.2 Where solvent cement is used as the pipe and fittings bonding agent, sprinklers shall not be installed in the fittings prior to the fittings being cemented in place.

6.5.3 In existing buildings, CPVC cut-ins to active fire sprinkler systems shall follow the manufacturer's recommended cut-in procedure.

6.5.4 A test connection shall be installed that permits the testing of the alarm mechanisms.

6.6 Water Supply.

6.6.1 Every sprinkler system shall have at least one automatic water supply.

6.6.2 The water supply shall be capable of supplying the system demand for at least 30 minutes. *(See 6.8.1.2.)*

6.6.3* The water supply source shall be one of the following:

(1) A connection to a reliable waterworks system with or without a pump, as required
(2) An elevated tank
(3) A pressure tank installed in accordance with NFPA 13, *Standard for the Installation of Sprinkler Systems*, and NFPA 22, *Standard for Water Tanks for Private Fire Protection*
(4) A stored water source with an automatically operated pump

6.6.4 Where a fire pump is installed, the fire pump shall be installed in accordance with NFPA 20, *Standard for the Installation of Stationary Pumps for Fire Protection.*

6.6.5* Domestic demand shall be included as part of the overall system demand for systems with common domestic/fire mains where no provisions are made to prevent the domestic waterflow upon sprinkler system activation.

6.6.6 Sprinkler systems with non-fire protection connections shall comply with Section 7.6 of NFPA 13, *Standard for the Installation of Sprinkler Systems.*

6.7 Installation of System Components.

6.7.1 Valves.

6.7.1.1 A single control valve arranged to shut off both the domestic system and the sprinkler system shall be installed for systems with common sprinkler/domestic mains unless a separate shutoff valve for the sprinkler system is installed in accordance with 6.7.1.2.

6.7.1.2 The sprinkler system piping shall not have a separate control valve installed unless supervised by one of the following methods:

(1) Central station, proprietary, or remote station alarm service
(2) Local alarm service that causes the sounding of an audible signal at a constantly attended location
(3) Valves that are locked open

6.7.1.3 A separate shutoff valve shall be installed for the domestic water supply in installations having a common sprinkler/domestic main.

6.7.1.4 System control or shutoff valves shall be of the slow-closing type unless they meet the requirements of 6.7.1.5.

6.7.1.5 System control or shutoff valves on backflow prevention devices that are 2 in. (50 mm) or less in nominal size shall not be required to comply with 6.7.1.4.

6.7.1.6 A listed backflow prevention assembly shall be considered a check valve, and an additional check valve shall not be required.

Copyright National Fire Protection Association
Provided by IHS under license with NFPA
No reproduction or networking permitted without license from IHS
Not for Resale

6.7.2* Drains.

6.7.2.1 Each sprinkler system shall have a drain on the system side of the control valve.

6.7.2.2 The drain pipe shall be at least 1 in. (25 mm) nominal diameter and shall be arranged so that it can drain all portions of the system.

6.7.2.3 A valve shall be installed in the drain piping.

6.7.2.4 A ½ in. (13 mm) drain shall be installed for each trapped portion of a dry system that is subject to freezing temperatures.

6.7.3* Test Connection.

6.7.3.1 Each sprinkler system shall have a test connection.

6.7.3.2 The test connection pipe shall be at least 1 in. (25 mm) nominal diameter and terminate in an orifice equal to or smaller than the same size as the smallest sprinkler installed in the system.

6.7.3.3 A valve shall be installed in the test connection piping.

6.7.3.4 When the drain required in 6.7.2.1 is arranged as a test connection, a separate test connection shall not be required.

6.7.4* Fire Department Connection.

6.7.4.1 At least one fire department connection shall be provided for buildings, accessible by a fire department, that exceed 2000 ft^2 (186 m^2) or are more than a single story.

6.7.4.2 Fire department connections shall be at least 1½ in. (38 mm).

6.7.4.3 Each fire department connection to sprinkler systems shall be designated by a sign having raised or engraved letters at least 1 in. (25.4 mm) in height on plate or fitting reading service design — for example, AUTOSPKR., OPEN SPKR., AND STANDPIPE.

6.7.4.4 The piping between the check valve and the outside hose coupling shall be equipped with an approved automatic drip in areas subject to freezing.

6.7.5 Pressure Gauges.

6.7.5.1 A pressure gauge shall be provided to indicate pressure of the supply.

6.7.5.2 A pressure gauge shall be provided to indicate pressure of the system.

6.7.6* Piping Support. Piping hanging and bracing methods shall comply with NFPA 13, *Standard for the Installation of Sprinkler Systems.*

6.7.7 Sprinklers.

6.7.7.1 Inside the Dwelling Units.

6.7.7.1.1 Listed residential sprinklers shall be used unless another type is permitted by 6.7.7.1.3 or 6.7.7.1.4.

6.7.7.1.2 Residential sprinklers shall not be used on systems other than wet pipe systems unless specifically listed for use on that particular type of system.

6.7.7.1.3 Listed quick-response sprinklers shall be permitted to be installed in dwelling units meeting the definition of a compartment, as defined in Section 4.2, where no more than four sprinklers are located in the dwelling unit. Where quick-response sprinklers (including extended coverage quick-response sprinklers) are used, the density/area requirement shall be a minimum of 0.1 gpm/ft^2 (4.1 mm/min) over the entire dwelling unit. Where extended coverage quick-response sprinklers are used, the flow shall be sufficient to meet the listing of the sprinklers at the spacing for which they are being used.

6.7.7.1.4 Quick-response sprinklers shall be permitted to be used in mechanical closets. Such sprinklers shall be capable of discharging a minimum of 0.1 gpm/ft^2 (4.1 mm/min).

6.7.7.1.5 Temperature Ratings.

6.7.7.1.5.1* Sprinklers installed where maximum ambient ceiling temperatures do not exceed 100°F (38°C) shall be ordinary temperature–rated sprinklers unless modified by 6.7.7.1.5.3.

6.7.7.1.5.2* Sprinklers installed where maximum ambient ceiling temperatures are between 101°F and 150°F (39°C and 66°C) shall be intermediate temperature–rated sprinklers unless modified by 6.7.7.1.5.3.

6.7.7.1.5.3 The following practices shall be observed when installing residential sprinklers unless higher expected ambient temperatures require a higher temperature rating.

(A) Sprinklers under glass or plastic skylights exposed to direct rays of the sun shall be of intermediate temperature classification.

(B) Sprinklers in an unventilated concealed space under uninsulated roof or in an unventilated attic shall be of intermediate temperature classification.

(C) Sprinklers installed near specific heat sources that are identified in Table 6.7.7.1.5.3 shall be of the temperature rating indicated in Table 6.7.7.1.5.3 unless sprinklers are listed for positioning closer to the heat source.

6.7.7.1.5.4 All sprinklers within a compartment shall have the same temperature classification except where required by 6.7.7.1.5.3 for a specific location.

6.7.7.1.5.5 Sprinklers shall be positioned so that the response time and discharge are not unduly affected by obstructions such as ceiling slope, beams, or light fixtures. Small areas created by architectural features such as planter box windows, bay windows, and similar features shall be evaluated as follows:

(1) Where no additional floor area is created by the architectural feature, no additional sprinkler protection is required.
(2) Where additional floor area is created by an architectural feature, no additional sprinkler protection is required, provided all of the following conditions are met:
   (a) The floor area shall not exceed 18 ft^2 (1.7 m^2).
   (b) The floor area shall not be greater than 2 ft (0.65 m) in depth at the deepest point of the architectural feature to the plane of the primary wall where measured along the finished floor.
   (c) The floor shall not be greater than 9 ft (2.9 m) in length where measured along the plane of the primary wall.
   (d) Measurement from the deepest point of the architectural feature to the sprinkler shall not exceed the maximum listed spacing of the sprinkler.
(3) The hydraulic design shall not be required to consider the area created by the architectural feature.

--`,,```,,,,````-`-`,,`,,`,`,,`---

Copyright National Fire Protection Association
Provided by IHS under license with NFPA
No reproduction or networking permitted without license from IHS
Not for Resale

Table 6.7.7.1.5.3 Minimum Distances for Ordinary and Intermediate Temperature Residential Sprinklers

Heat Source	From Edge of Source to Ordinary Temperature Sprinkler		From Edge of Source to Intermediate Temperature Sprinkler	
	in.	mm	in.	mm
Side of open or recessed fireplace	36	914	12	305
Front of recessed fireplace	60	1524	36	914
Coal- or wood-burning stove	42	1067	12	305
Kitchen range	18	457	9	229
Wall oven	18	457	9	229
Hot air flues	18	457	9	229
Uninsulated heat ducts	18	457	9	229
Uninsulated hot water pipes	12	305	6	152
Side of ceiling- or wall-mounted hot air diffusers	24	607	12	305
Front of wall-mounted hot air diffusers	36	914	18	457
Hot water heater or furnace	6	152	3	76
Light fixture:				
0 W–250 W	6	152	3	76
250 W–499 W	12	305	6	152

6.7.7.1.5.6* Except as otherwise permitted in 6.7.7.1.5.3, 6.7.7.1.5.4, and 6.7.7.1.5.7, residential sprinklers shall provide, in conjunction with survivability enhancement, complete coverage of the floor area within the compartment.

6.7.7.1.5.7 Small potentially blocked or shadowed floor areas shall be permitted on a horizontal plane in compartments of 800 ft^2 (74.3 m^2) or less as long as all of the following conditions are met. For purposes of simplified calculations, assume in this theoretical case that the water discharging from a sprinkler travels in a straight line only.

(1) The maximum area of any single individual contiguous shadowed floor area, regardless of geometric configuration, shall not exceed 3 ft^2 (0.28 m^2).
(2) The maximum area summation of any number of individual shadowed floor areas shall not exceed 12 ft^2 (1.11 m^2) per compartment.
(3) The maximum total summation of shadowed floor areas and allowances made by 6.7.7.1.5.3 shall not exceed 30 ft^2 (2.79 m^2) per dwelling unit.

6.7.7.2 Outside the Dwelling Units.

6.7.7.2.1 Sprinklers outside of the dwelling units shall be quick-response, and selection shall be based on the requirements of NFPA 13, *Standard for the Installation of Sprinkler Systems*, except where permitted by 6.7.7.2.2.

6.7.7.2.2 Residential sprinklers shall be permitted to be used in corridors leading to dwelling units and in areas covered by 6.8.2.2, 6.8.2.3, and 6.8.3.3.

6.7.7.3 Quick-Response Sprinklers. Where quick-response sprinklers are installed in accordance with 6.7.7.1.3, 6.7.7.1.4, or 6.7.7.2.1, the maximum allowable spacing, minimum allowable spacing, and distance from the ceiling shall be in accordance with NFPA 13, *Standard for the Installation of Sprinkler Systems.*

6.7.7.4 Open-Grid Ceilings. Open-grid ceilings shall be installed only as permitted by NFPA 13, *Standard for the Installation of Sprinkler Systems.*

6.7.7.5 Drop-Out Ceilings. Drop-out ceilings shall be permitted to be installed beneath sprinklers where ceilings are listed for that service and are installed in accordance with their listings.

6.7.8 Alarms.

6.7.8.1 A local waterflow alarm shall be provided on all sprinkler systems.

6.7.8.2 Where a building fire alarm system is provided, the local waterflow alarms shall be connected to the building fire alarm system.

6.7.8.3 Waterflow alarms shall be installed in accordance with NFPA 13, *Standard for the Installation of Sprinkler Systems.*

6.7.8.4 Where a building fire alarm system is provided, the building fire sprinkler system shall not be required to be zoned by floor.

6.8 System Design.

6.8.1 Design Criteria — Inside Dwelling Unit.

6.8.1.1 Design Discharge.

6.8.1.1.1* Residential Sprinklers.

6.8.1.1.1.1 The system shall provide at least the flow required for the multiple and single sprinkler operating criteria specified by the sprinkler listing.

6.8.1.1.1.2* The system shall provide at least the flow required to produce a minimum discharge density of 0.05 gpm/ft^2 (2.04 mm/min) to the design sprinklers.

6.8.1.2* Number of Design Sprinklers. The number of design sprinklers under flat, smooth, horizontal ceilings shall include all sprinklers within a compartment, up to a maximum of four adjacent sprinklers, that requires the greatest hydraulic demand.

6.8.1.3 Sprinkler Coverage.

6.8.1.3.1 Residential Sprinklers That Have Been Listed with Specific Coverage Criteria. Sprinklers shall be installed in accordance with the coverage criteria specified by the listing.

6.8.1.3.1.1 Sloped Ceilings.

(A) Where the ceiling is sloped, the maximum *S* dimension shall be measured along the slope of the ceiling to the next sprinkler as shown in Figure 6.8.1.3.1.1(A).

(B) The sprinklers shall maintain the minimum listed spacing, but no less than 8 ft (2.44 m), measured in the plan view from one sprinkler to another as shown in Figure 6.8.1.3.1.1(A).

6.8.1.3.1.2 Sprinklers shall be installed in accordance with their listing where the type of ceiling configuration is referenced in the listing.

Copyright National Fire Protection Association
Provided by IHS under license with NFPA
No reproduction or networking permitted without license from IHS
Not for Resale

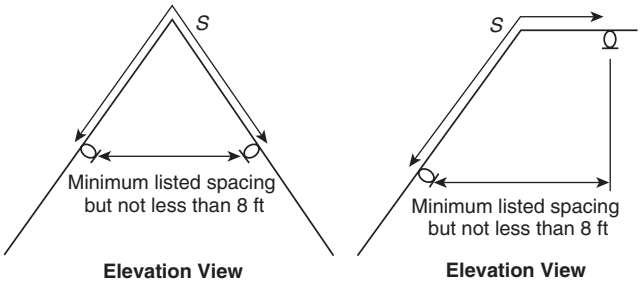

FIGURE 6.8.1.3.1.1(A) Measuring *S* Dimension.

6.8.1.3.1.3* Where construction features or other special conditions exist that are outside the scope of sprinkler listings, listed sprinklers shall be permitted to be installed beyond their listing limitations.

6.8.1.4 Operating Pressure. The minimum operating pressure of any sprinkler shall be the higher of the minimum operating pressure specified by the listing or 7 psi (0.5 bar).

6.8.1.5 Position of Residential Sprinklers.

6.8.1.5.1 Pendent and Upright Sprinklers.

6.8.1.5.1.1 Pendent and upright sprinklers that have not been listed with specific positioning criteria shall be positioned so that the deflectors are within 1 in. to 4 in. (25.4 mm to 102 mm) from the ceiling.

6.8.1.5.1.2 Pendent and upright sprinklers that have been listed with specific positioning criteria shall be positioned in accordance with the listing.

6.8.1.5.2 Sidewall Sprinklers.

6.8.1.5.2.1 Sidewall sprinklers that have not been listed with specific positioning criteria shall be positioned so that the deflectors are within 4 in. to 6 in. (102 mm to 152 mm) from the ceiling.

6.8.1.5.2.2 Sidewall sprinklers that have been listed with specific positioning criteria shall be positioned in accordance with the listing.

6.8.1.5.3* Obstructions to Residential Sprinklers.

6.8.1.5.3.1 Closets. In all closets, including those closets housing mechanical equipment, that are not larger than 400 ft^3 (11.33 m^3) in size, a single sprinkler at the highest ceiling space in the closet shall be sufficient without regard to obstructions.

6.8.1.5.3.2 Pendent Sprinklers.

(A) Pendent sprinklers shall be located at least 3 ft (914 mm) from obstructions such as ceiling fans and light fixtures unless the requirements of 6.8.1.5.3.4 are met.

(B) The distance shall be measured from the center of the sprinkler to the center of the obstruction.

(C) Where the sprinkler cannot be located 3 ft (914 mm) from the obstruction (as measured from the center of the obstruction), an additional sprinkler shall be located on the other side of the obstruction.

(D) Where the area of the fan blades encompasses more than 50 percent of the area of the plan view, the sprinkler shall be installed in accordance with 6.8.1.5.3.4.

6.8.1.5.3.3 Sidewall Sprinklers.

(A) Sidewall sprinklers shall be located at least 5 ft (1.52 m) from obstructions such as ceiling fans and light fixtures unless the requirements of 6.8.1.5.3.5 are met.

(B) The distance shall be measured from the center of the sprinkler to the center of the obstruction.

(C) Where the sprinkler cannot be located 5 ft (1.52 m) from the obstruction (as measured to the center of the obstruction), an additional sprinkler shall be installed on the other side of the obstruction.

(D) Where the area of the fan blades encompasses more than 50 percent of the area of the plan view, the sprinkler shall be installed in accordance with 6.8.1.5.3.5.

6.8.1.5.3.4 Continuous Obstructions to Pendent Sprinklers.

(A) Sprinklers shall be positioned with respect to continuous obstructions in accordance with 6.8.1.5.3.4(B), 6.8.1.5.3.4(C), or 6.8.1.5.3.4(D).

(B) Sprinklers shall be positioned with respect to continuous obstructions in accordance with Table 6.8.1.5.3.4(B) and Figure 6.8.1.5.3.4(B).

Table 6.8.1.5.3.4(B) Position of Sprinklers to Avoid Obstructions to Discharge (Residential Upright and Pendent Spray Sprinklers)

Distance from Sprinklers to Side of Obstruction (*A*)	Maximum Allowable Distance of Deflector Above Bottom of Obstruction (in.) (*B*)
Less than 1 ft	0
1 ft to less than 1 ft 6 in.	0
1 ft 6 in. to less than 2 ft	1
2 ft to less than 2 ft 6 in.	1
2 ft 6 in. to less than 3 ft	1
3 ft to less than 3 ft 6 in.	3
3 ft 6 in. to less than 4 ft	3
4 ft to less than 4 ft 6 in.	5
4 ft 6 in. to less than 5 ft	7
5 ft to less than 5 ft 6 in.	7
5 ft 6 in. to less than 6 ft	7
6 ft to less than 6 ft 6 in.	9
6 ft 6 in. to less than 7 ft	11
7 ft and greater	14

For SI units, 1 in. = 25.4 mm; 1 ft = 0.3048 m.
Note: For (*A*) and (*B*), refer to Figure 6.8.1.5.3.4(B).

(C) Sprinklers shall be positioned with respect to an obstruction against a wall in accordance with Figure 6.8.1.5.3.4(C).

(D) A sprinkler shall be installed on the other side of the obstruction.

6.8.1.5.3.5 Continuous Obstructions to Sidewall Sprinklers.

(A) Sprinklers shall be positioned with respect to continuous obstructions in accordance with 6.8.1.5.3.5(B) or 6.8.1.5.3.5(C).

Copyright National Fire Protection Association
Provided by IHS under license with NFPA
No reproduction or networking permitted without license from IHS
Not for Resale

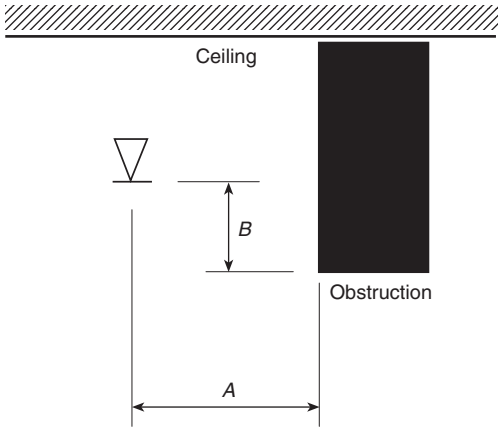

FIGURE 6.8.1.5.3.4(B) Position of Sprinklers to Avoid Obstructions to Discharge (Residential Upright and Pendent Spray Sprinklers).

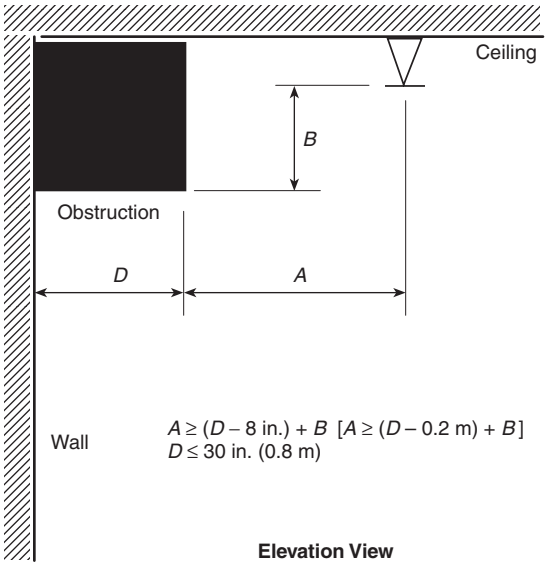

FIGURE 6.8.1.5.3.4(C) Obstructions Against Walls (Residential Upright and Pendent Spray Sprinklers).

(B) Sprinklers shall be positioned with respect to continuous obstructions in accordance with Table 6.8.1.5.3.5(B)(a), Figure 6.8.1.5.3.5(B)(a), Table 6.8.1.5.3.5(B)(b), and Figure 6.8.1.5.3.5(B)(b).

(C) A sprinkler shall be installed on the other side of the obstruction.

6.8.1.5.3.6 Soffits and Cabinets. Where soffits are used for the installation of sidewall sprinklers, the sprinklers and soffits shall be installed in accordance with 6.8.1.5.3.6(A), 6.8.1.5.3.6(B), or 6.8.1.5.3.6(C).

(A) Where soffits exceed more than 8 in. (203 mm) in width or projection from the wall, pendent sprinklers shall be installed under the soffit.

Table 6.8.1.5.3.5(B)(a) Positioning of Sprinklers to Avoid Obstructions (Residential Sidewall Sprinklers)

Distance from Sidewall Sprinkler to Side of Obstruction (*A*)	Maximum Allowable Distance of Deflector Above Bottom of Obstruction (in.) (*B*)
Less than 8 ft	Not Allowed
8 ft to less than 10 ft	1
10 ft to less than 11 ft	2
11 ft to less than 12 ft	3
12 ft to less than 13 ft	4
13 ft to less than 14 ft	6
14 ft to less than 15 ft	7
15 ft to less than 16 ft	9
16 ft to less than 17 ft	11
17 ft or greater	14

For SI units, 1 in. = 25.4 mm; 1 ft = 0.3048 m.
Note: For (*A*) and (*B*), refer to Figure 6.8.1.5.3.5(B)(a).

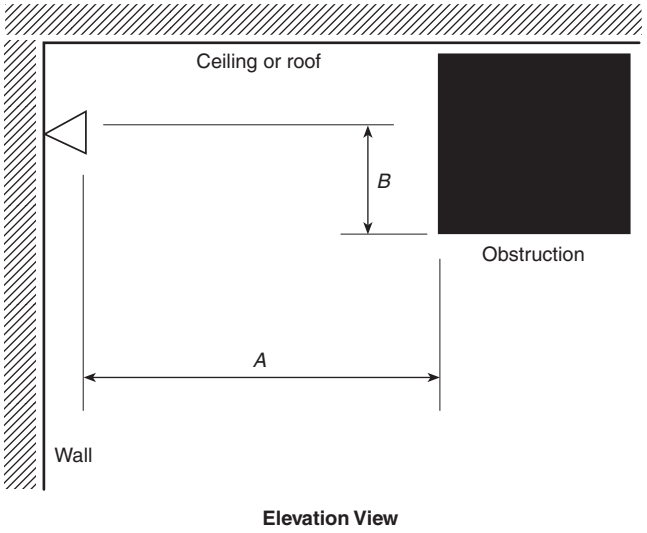

FIGURE 6.8.1.5.3.5(B)(a) Positioning of Sprinklers to Avoid Obstructions (Residential Sidewall Sprinklers).

(B) Sidewall sprinklers shall be permitted to be installed in the face of a soffit located directly over cabinets, without requiring additional sprinklers below the soffit or cabinets, where the soffit does not project horizontally more than 12 in. (305 mm) from the wall.

(C) Where sidewall sprinklers are more than 3 ft (914 mm) above the top of cabinets, the sprinkler shall be permitted to be installed on the wall above the cabinets where the cabinets are no greater than 12 in. (305 mm) from the wall.

6.8.1.5.4 Ceiling Pockets.

6.8.1.5.4.1 Sprinklers shall be required in all ceiling pockets.

6.8.1.5.4.2 The requirement of 6.8.1.5.4.1 shall not apply where all of the following requirements are met:

(1) The total volume of the unprotected ceiling pocket does not exceed 100 ft^3 (2.83 m^3).
(2) The depth of the unprotected ceiling pocket does not exceed 12 in. (305 mm).

Copyright National Fire Protection Association
Provided by IHS under license with NFPA
No reproduction or networking permitted without license from IHS
Not for Resale

Table 6.8.1.5.3.5(B)(b) Positioning of Sprinklers to Avoid Obstructions Along the Wall (Residential Sidewall Sprinklers)

Distance from Sidewall Sprinkler to Side of Obstruction (*A*)	Maximum Allowable Distance of Deflector Above Bottom of Obstruction (in.) (*B*)
Less than 1 ft 6 in.	0
1 ft 6 in. to less than 3 ft	1
3 ft to less than 4 ft	3
4 ft to less than 4 ft 6 in.	5
4 ft 6 in. to less than 6 ft	7
6 ft to less than 6 ft 6 in.	9
6 ft 6 in. to less than 7 ft	11
7 ft to less than 7 ft 6 in.	14

For SI units, 1 in. = 25.4 mm; 1 ft = 0.3048 m.
Note: For (*A*) and (*B*), refer to Figure 6.8.1.5.3.5(B)(b).

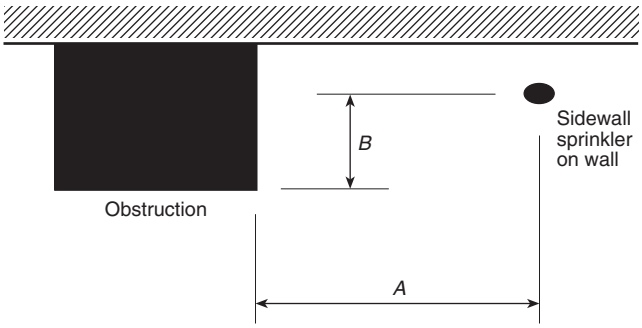

FIGURE 6.8.1.5.3.5(B)(b) Positioning of Sprinklers to Avoid Obstructions Along the Wall (Residential Sidewall Sprinklers).

(3) The entire floor of the unprotected ceiling pocket is protected by the sprinklers at the lower ceiling elevation.
(4) Each unprotected ceiling pocket is separated from any adjacent unprotected ceiling pocket by a minimum 10 ft (3.05 m) horizontal distance.
(5) The interior finish of the unprotected ceiling pocket is noncombustible or limited-combustible construction.

6.8.1.6 Quick-Response Sprinklers. Where quick-response sprinklers are used in accordance with 6.7.7.1.3, the discharge and design area requirements of NFPA 13, *Standard for the Installation of Sprinkler Systems*, shall apply.

6.8.2* Design Criteria — Outside Dwelling Unit.

6.8.2.1 For areas outside the dwelling unit, the design discharge and design area criteria shall comply with NFPA 13, *Standard for the Installation of Sprinkler Systems*, unless permitted by 6.8.2.2 and 6.8.2.3.

6.8.2.2 The system demand of areas outside the dwelling unit shall be permitted to be limited to the number of sprinklers in the compartmented area but shall not be greater than the demand for a total of four sprinklers where all of the following conditions are met:

(1) The area is compartmented into areas of 500 ft^2 (46 m^2) or less by 30-minute fire-rated construction.
(2) The area is protected by quick-response or residential sprinklers not exceeding 130 ft^2 (12 m^2) per sprinkler for ordinary hazard, 225 ft^2 (20.9 m^2) for light hazard, or the allowable coverage of the sprinkler listing.
(3) Openings have a lintel at least 8 in. (203 mm) in depth.
(4) The total area of openings does not exceed 50 ft^2 (4.6 m^2) for each compartment.
(5) Discharge densities are in accordance with NFPA 13, *Standard for the Installation of Sprinkler Systems.*

6.8.2.3 The following types of spaces are permitted to be protected by residential sprinklers where they have flat, smooth ceilings and are protected in accordance with the requirements for residential sprinklers:

(1) Lobbies not in hotels and motels
(2) Foyers
(3) Corridors
(4) Halls
(5) Lounges
(6) Other areas with fire loads similar to residential

6.8.3 Design Criteria — Garages.

6.8.3.1 Garages that are completely separated from the residential portion of the building by fire-resistive construction sufficient to have them considered separate buildings under the local code shall be protected in accordance with NFPA 13, *Standard for the Installation of Sprinkler Systems.*

6.8.3.2 Garages that are accessible by people from more than one dwelling unit, and are not covered by 6.8.3.1, shall be considered part of the building and shall be protected in accordance with 6.8.2. Garage doors shall not be considered obstructions and shall be permitted to be ignored for placement and calculation of sprinklers.

6.8.3.3* Garages that are accessible only from a single dwelling unit shall be considered as part of that dwelling unit. Such garages shall be sprinklered with residential sprinklers in accordance with 6.8.1 or quick-response sprinklers designed to provide a density of 0.05 gpm/ft^2 (2.04 mm/min) over the area of the garage, but not to exceed four sprinklers. Garage doors shall not be considered obstructions and shall be permitted to be ignored for placement and calculation of sprinklers.

6.8.4 Pipe Sizing. Piping shall be sized using hydraulic calculation procedures in accordance with NFPA 13, *Standard for the Installation of Sprinkler Systems.*

6.9 Location of Sprinklers.

6.9.1 Sprinklers shall be installed in all areas except where omission is permitted by 6.9.2 through 6.9.7.

6.9.2* Sprinklers shall not be required in bathrooms where the bathroom area does not exceed 55 ft^2 (5.1 m^2).

6.9.3 Except where specified in 6.9.4, sprinklers shall not be required in clothes closets, linen closets, and pantries within dwelling units that meet all of the following conditions:

(1) The area of the space does not exceed 24 ft^2 (2.2 m^2).
(2) The least dimension does not exceed 3 ft (0.91 m).
(3) The walls and ceilings are surfaced with noncombustible or limited-combustible materials as defined by NFPA 220, *Standard on Types of Building Construction.*

Copyright National Fire Protection Association
Provided by IHS under license with NFPA
No reproduction or networking permitted without license from IHS
Not for Resale

6.9.4 Sprinklers shall be installed in any closet used for heating and air-conditioning equipment.

6.9.5 Sprinklers shall not be required in any porches, balconies, corridors, and stairs that are open and attached.

6.9.6* Sprinklers shall not be required in attics, penthouse equipment rooms, elevator machine rooms, concealed spaces dedicated exclusively to and containing only dwelling unit ventilation equipment, crawl spaces, floor/ceiling spaces, noncombustible elevator shafts where the elevator cars comply with ANSI A17.1, *Safety Code for Elevators and Escalators*, and other concealed spaces that are not used or intended for living purposes or storage and do not contain fuel-fired equipment.

6.9.7 Sprinklers shall not be required in closets on exterior balconies, regardless of size, as long as there are no doors or unprotected penetrations from the closet directly into the dwelling unit.

6.10* Maintenance.

6.10.1 The owner shall be responsible for the condition of a sprinkler system and shall keep the system in normal operating condition.

6.10.2 Sprinkler systems shall be inspected, tested, and maintained in accordance with NFPA 25, *Standard for the Inspection, Testing, and Maintenance of Water-Based Fire Protection Systems.*

Annex A Explanatory Material

Annex A is not a part of the requirements of this NFPA document but is included for informational purposes only. This annex contains explanatory material, numbered to correspond with the applicable text paragraphs.

A.1.1 NFPA 13R is appropriate for use as an option to NFPA 13, *Standard for the Installation of Sprinkler Systems*, only in those residential occupancies, as defined in this standard, up to and including four stories in height. It is the intent of this standard that if NFPA 13R is appropriate for use, that it be used throughout the entire building. It is recognized that an occupancy incidental to the operations of the residential occupancy might exist within that residential occupancy. Such incidental occupancy would be considered part of the predominant (residential) occupancy and subject to the provisions of the predominant (residential) occupancy by 6.1.14.2 of NFPA *101*, *Life Safety Code*, and similar provisions in many local building and fire codes. Use of NFPA 13R throughout the entire building in this case is allowed.

Where buildings are greater than four stories in height, or where buildings are of mixed use where residential is not the predominant occupancy, residential portions of such buildings should be protected with residential or quick-response sprinklers in accordance with 8.4.5 of NFPA 13. Other portions of such buildings should be protected in accordance with NFPA 13. Where buildings of mixed use can be totally separated so that the residential portion is considered a separate building under the local code, NFPA 13R can be used in the residential portion while NFPA 13 is used in the rest of the building.

The criteria in this standard are based on full-scale fire tests of rooms containing typical furnishings found in residential living rooms, kitchens, and bedrooms. The furnishings were arranged as typically found in dwelling units in a manner similar to that shown in Figure A.1.1(a), Figure A.1.1(b), and Figure A.1.1(c). Sixty full-scale fire tests were conducted in a two-story dwelling in Los Angeles, California, and 16 tests were conducted in a 14 ft (4.3 m) wide mobile home in Charlotte, North Carolina. Sprinkler systems designed and installed according to this standard are

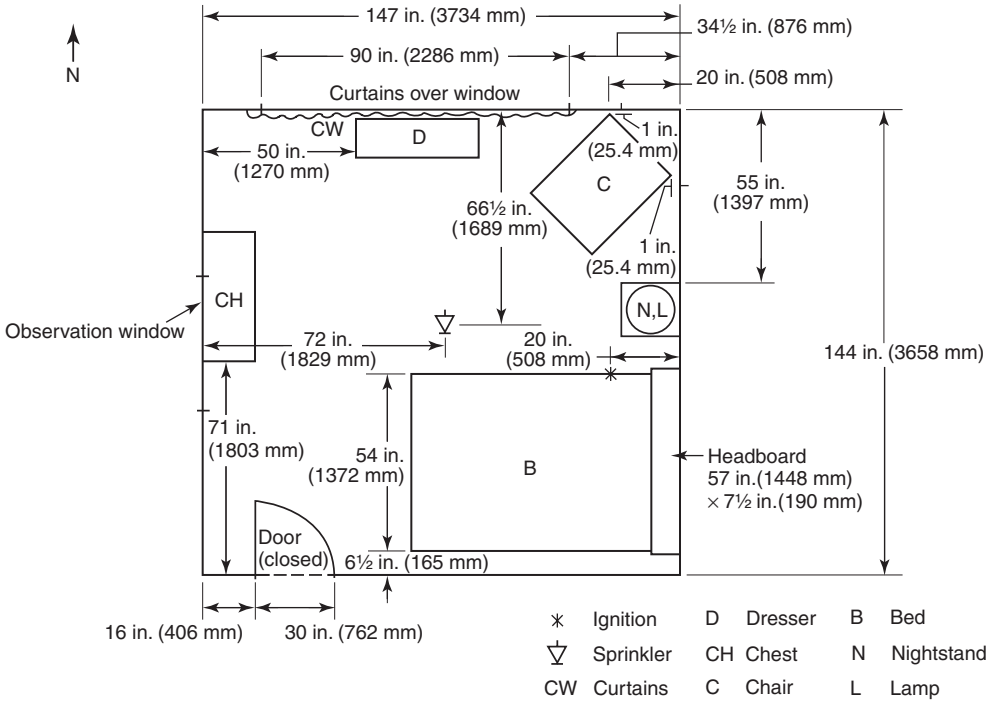

FIGURE A.1.1(a) Bedroom.

Copyright National Fire Protection Association
Provided by IHS under license with NFPA
No reproduction or networking permitted without license from IHS
Not for Resale

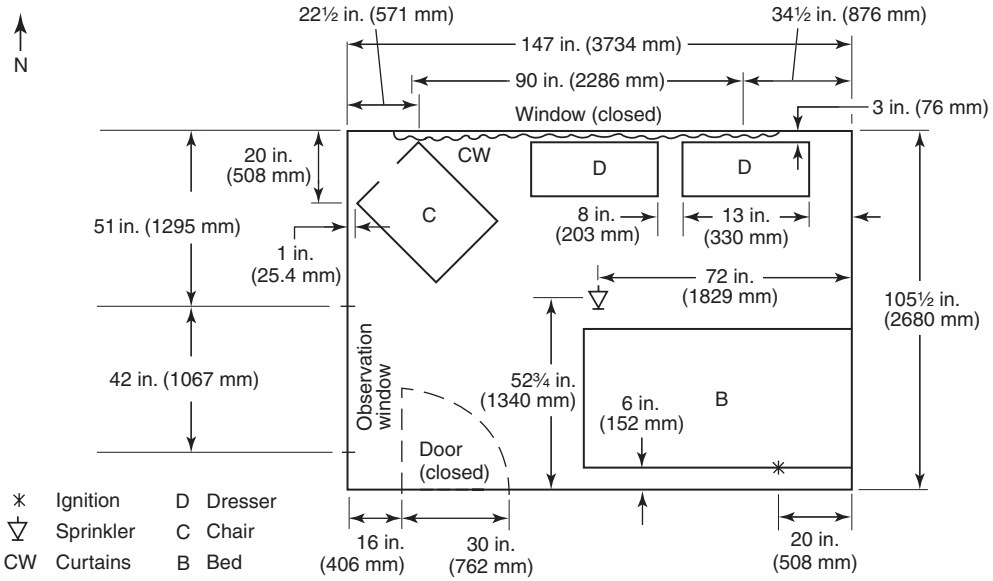

FIGURE A.1.1(b) Manufactured Home Bedroom.

expected to prevent flashover within the compartment of origin where sprinklers are installed in the compartment. A sprinkler system designed and installed according to this standard cannot, however, be expected to completely control a fire involving fuel loads that are significantly higher than average for dwelling units [10 lb/ft^2 (49 kg/m^2)], configurations of fuels other than those with typical residential occupancies, or conditions where the interior finish has an unusually high flame spread index (greater than 225).

To be effective, sprinkler systems installed in accordance with this standard need to open the sprinklers closest to the fire before the fire exceeds the ability of the sprinkler discharge to extinguish or control the fire. Conditions that allow the fire to grow beyond that point before sprinkler activation or that interfere with the quality of water distribution can produce conditions beyond the capabilities of the sprinkler system described in this standard. Unusually high ceilings or ceiling configurations that tend to divert the rising hot gases from sprinkler locations or change the sprinkler discharge pattern from its standard pattern can produce fire conditions that cannot be extinguished or controlled by the systems described in this standard.

A.1.2 Various levels of sprinkler protection are available to provide life safety and property protection. This standard is designed to provide a high, but not absolute, level of life safety and a lesser level of property protection. Greater protection to both life and property could be achieved by sprinklering all areas in accordance with NFPA 13, *Standard for the Installation of Sprinkler Systems*, which permits the use of residential sprinklers in residential areas.

This standard recommends, but does not require, sprinklering of all areas in the building; it permits sprinklers to be omitted in certain areas. These areas have been proved by NFPA statistics to be those where the incidence of life loss from fires in residential occupancies is low. Such an approach provides a reasonable degree of fire safety. *(See Table A.1.2 for deaths and injuries in multifamily residential buildings.)*

It should be recognized that the omission of sprinklers from certain areas could result in the development of untenable conditions in adjacent spaces. Where evacuation times could be delayed, additional sprinkler protection and other fire protection features, such as detection and compartmentation, could be necessary.

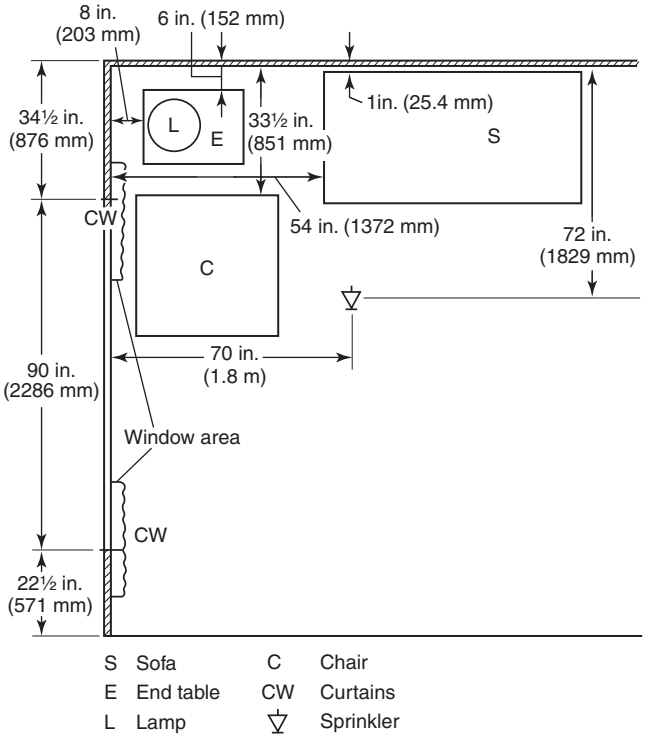

FIGURE A.1.1(c) Living Room.

A.1.5.1 For additional conversions and information, see ASTM SI 10, *Standard for Use of the International System of Units (SI): the Modern Metric System.*

Copyright National Fire Protection Association
Provided by IHS under license with NFPA
No reproduction or networking permitted without license from IHS
Not for Resale

Table A.1.2 Fires and Associated Deaths and Injuries in Apartments by Area of Origin; Annual Average of 1986–1990 Structure Fires Reported to U.S. Fire Departments

Area of Origin	Civilian Deaths	Civilian Percent	Fires	Percent	Injuries	Percent
Bedroom	309	33.9	17,960	15.8	1,714	27.2
Living room, family room, or den	308	33.8	10,500	9.3	1,272	20.2
Kitchen	114	12.5	46,900	41.4	1,973	31.2
Interior stairway	29	3.2	1,040	0.9	91	1.4
Hallway or corridor	23	2.6	3,130	2.8	165	2.6
Exterior balcony or open porch	17	1.8	1,880	1.7	69	1.1
Dining room	10	1.1	800	0.7	69	1.1
Closet	9	1.0	2,120	1.9	116	1.8
Multiple areas	9	1.0	780	0.7	38	0.6
Tool room or other supply storage room or area	8	0.9	1,250	1.1	53	0.8
Unclassified area	8	0.9	480	0.4	29	0.5
Exterior stairway	8	0.8	870	0.8	22	0.4
Bathroom	7	0.7	2,510	2.2	101	1.6
Heating equipment room or area	6	0.6	2,510	2.2	75	1.2
Exterior wall surface	5	0.5	2,150	1.9	26	0.4
Laundry room or area	4	0.4	3,380	3.0	89	1.4
Crawl space or substructure space	4	0.4	1,490	1.3	62	1.0
Wall assembly or concealed space	3	0.4	1,020	0.9	21	0.3
Attic or ceiling/roof assembly or concealed space	3	0.3	1,100	1.0	18	0.3
Ceiling/floor assembly or concealed space	3	0.3	560	0.5	18	0.3
Garage or carport*	3	0.3	1,290	1.1	36	0.6
Lobby or entrance way	3	0.3	670	0.6	31	0.5
Unclassified structural area	3	0.3	520	0.5	32	0.5
Unclassified storage area	3	0.3	430	0.4	22	0.3
Unclassified function area	3	0.3	250	0.2	13	0.2
Laboratory	2	0.3	80	0.1	3	0.0
Elevator or dumbwaiter	1	0.2	220	0.2	4	0.1
Sales or showroom area	1	0.2	110	0.1	3	0.1
Exterior roof surface	1	0.1	1,040	0.9	15	0.2
Unclassified means of egress	1	0.1	180	0.2	6	0.1
Office	1	0.1	120	0.1	4	0.1
Chimney	1	0.1	980	0.9	2	0.0
Personal service area	1	0.1	40	0.0	4	0.1
Library	1	0.1	10	0.0	0	0.0
Other known area	2	0.2	5,000	4.4	115	1.8
Totals	912	100.0	113,390	100.0	6,313	100.0

Note: Fires are estimated to the nearest 10; civilian deaths and injuries are estimated to the nearest 1.
* Does not include dwelling garages coded as a separate property.
(Source: 1986-1990 NFIRS and NFPA survey.)

A.1.5.4 A given equivalent value is considered to be approximate.

A.3.2.1 Approved. The National Fire Protection Association does not approve, inspect, or certify any installations, procedures, equipment, or materials; nor does it approve or evaluate testing laboratories. In determining the acceptability of installations, procedures, equipment, or materials, the authority having jurisdiction may base acceptance on compliance with NFPA or other appropriate standards. In the absence of such standards, said authority may require evidence of proper installation, procedure, or use. The authority having jurisdiction may also refer to the listings or labeling practices of an organization that is concerned with product evaluations and is thus in a position to determine compliance with appropriate standards for the current production of listed items.

A.3.2.2 Authority Having Jurisdiction (AHJ). The phrase "authority having jurisdiction," or its acronym AHJ, is used in NFPA documents in a broad manner, since jurisdictions and approval agencies vary, as do their responsibilities. Where public safety is primary, the authority having jurisdiction may be a federal, state, local, or other regional department or individual such as a fire chief; fire marshal; chief of a fire prevention bureau, labor department, or health department; building official; electrical inspector; or others having statutory authority. For insurance purposes, an insurance inspection department, rating bureau, or other insurance company representative may be the authority

--`,,```,,,,````-`-`,,`,,`,`,,`---
Copyright National Fire Protection Association
Provided by IHS under license with NFPA
No reproduction or networking permitted without license from IHS
Not for Resale

having jurisdiction. In many circumstances, the property owner or his or her designated agent assumes the role of the authority having jurisdiction; at government installations, the commanding officer or departmental official may be the authority having jurisdiction.

A.3.2.4 Listed. The means for identifying listed equipment may vary for each organization concerned with product evaluation; some organizations do not recognize equipment as listed unless it is also labeled. The authority having jurisdiction should utilize the system employed by the listing organization to identify a listed product.

A.3.3.1 Bathroom. A room is still considered a bathroom if it contains just a toilet. Additionally, two bathrooms can be adjacent to each other and are considered separate rooms, provided they are enclosed with the required level of construction.

A.3.3.5.1 Light Hazard Occupancy. Light hazard occupancies include occupancies having uses and conditions similar to the following: churches; clubs; educational; hospitals; institutional; libraries, except large stack rooms; museums; nursing or convalescent homes; offices, including data processing; residential; restaurant seating areas; and theaters and auditoriums, excluding stages and prosceniums.

A.3.3.5.2 Ordinary Hazard (Group 1). Ordinary hazard occupancies (Group 1) include occupancies having uses and conditions similar to the following: automobile parking and showrooms, bakeries, laundries, and restaurant service areas.

A.3.3.5.3 Ordinary Hazard (Group 2). Ordinary hazard occupancies (Group 2) include occupancies having uses and conditions similar to the following: dry cleaners; horse stables; libraries — large stack room areas; mercantile; post offices; repair garages; and stages.

A.5.1.1.1 Compatible thread sealant or Teflon tape can be used in a CPVC sprinkler head adapter. However, a combination of the two cannot be used together. The manufacturer of the sprinkler head adapter has listed installation instructions that must be followed for each sprinkler head adapter used.

A.5.1.1.2 The four- to six-character sprinkler identification number, with no intervening spaces, is intended to identify the sprinkler operating characteristics in lieu of the traditional laboratory approval marking (e.g., SSU, SSP, EC, QR, etc.). The number, marked on the deflector of most sprinklers and elsewhere on decorative ceiling sprinklers, consists of one or two characters identifying the manufacturer, followed by three or four digits.

Sprinkler manufacturers have identified their manufacturer designations for the listing organizations. Each change in orifice size, response characteristics, or deflector (distribution) characteristics results in a new sprinkler identification number. The numbers do not identify specific characteristics of sprinklers but can be referenced in the database information compiled by the listing organizations. At the plan review stage, the sprinkler identification number should be checked against such a database or the manufacturer's literature to ensure that sprinklers are being used properly and within the limitations of their listings. Field inspections can include spot checks to ensure that the model numbers on the plans are those actually installed.

A.5.1.1.5 Information regarding the highest temperature that can be encountered in any location in a particular installation can be obtained by use of a thermometer that will register the highest temperature encountered; it should be hung for several days in the location in question.

A.5.1.1.6.2 The use of the wrong type of escutcheon with recessed or flush-type sprinklers can result in severe disruption of the spray pattern, which can destroy the effectiveness of the sprinkler.

A.5.1.1.8.1 Protective caps and straps are intended to provide temporary protection for sprinklers during shipping and installation.

A.5.1.1.8.2 Protective caps and straps can be removed from upright sprinklers, from sprinklers that are fitted with sprinkler guards, and from sprinklers that are not likely to be subject to damage due to construction activities or other events. In general, protective caps and straps should not be removed until construction activities or other events have progressed to the point where the sprinklers will not be subjected to conditions that could cause them to be damaged. Consideration should be given to leaving the protective caps and straps in place where other construction work is expected to take place, adjacent to the sprinklers following their installation, until that activity is complete. Protective caps and straps on sidewall and pendent sprinklers, for example, should be left in place pending installation of the wall and ceiling systems and then removed as finish escutcheons are being installed.

In retrofit applications, with minimal follow-on trade construction activity, and with upright sprinklers, it would be reasonable to remove the caps and straps immediately following the installation on the sprinkler piping.

A.5.2.1 This standard anticipates that the water supply for the system is in compliance with the governing plumbing code for the jurisdiction. It is intended that any pipe material or diameter permitted for multiple-family dwellings in the plumbing code and satisfying the hydraulic criteria of NFPA 13R is considered to be in compliance.

Any type of pipe or tube acceptable under the plumbing code for underground supply pipe shall be acceptable as underground supply for the fire sprinkler system when installed between the point of connection and the system riser.

A.5.2.2.2 Not all pipe or tube made to ASTM D 3309, *Standard Specification for Polybutylene (PB) Plastic Hot- and Cold-Water Distribution Systems*, and ASTM F 442, *Standard Specification for Chlorinated Poly (Vinyl Chloride) (CPVC) Plastic Pipe (SDR-PR)*, as described in 5.2.2.2 is listed for fire sprinkler service. Listed pipe is identified by the logo of the listing agency.

A.5.2.10.2 Not all fittings made to ASTM F 437, *Standard Specification for Threaded Chlorinated Poly (Vinyl Chloride) (CPVC) Plastic Pipe Fittings, Schedule 80*; ASTM F 438, *Standard Specification for Socket-Type Chlorinated Poly (Vinyl Chloride) (CPVC) Plastic Pipe Fittings, Schedule 40*; and ASTM F 439 *Standard Specification for Socket-Type Chlorinated Poly (Vinyl Chloride) (CPVC) Plastic Pipe Fittings, Schedule 80*, as described in 5.2.10.2 are listed for fire sprinkler service. Listed fittings are identified by the logo of the listing agency.

A.5.2.12.4 The intent of 5.2.12.4 is to provide assistance in determining the area of a building served by a particular control valve.

A.5.2.12.4.4 Care should be taken to ensure that all water supplies are isolated before work begins. Work on systems by shutting one valve and not knowing about another valve may result in unexpected water damage.

A.5.3.2 Piping covered by insulation, as shown in Figure A.5.3.2(a) through Figure A.5.3.2(e), is considered part of the area below the ceiling and not part of the unheated attic area.

Copyright National Fire Protection Association
Provided by IHS under license with NFPA
No reproduction or networking permitted without license from IHS
Not for Resale

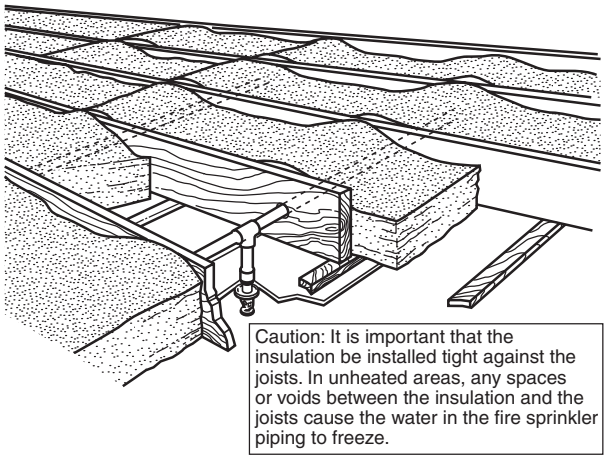

FIGURE A.5.3.2(a) Insulation Recommendations — Arrangement 1.

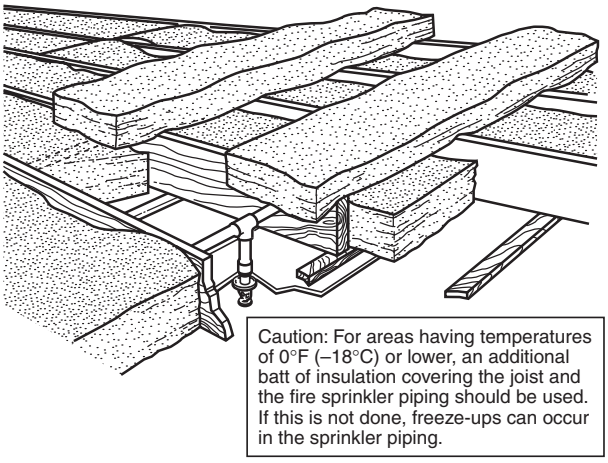

FIGURE A.5.3.2(b) Insulation Recommendations — Arrangement 2.

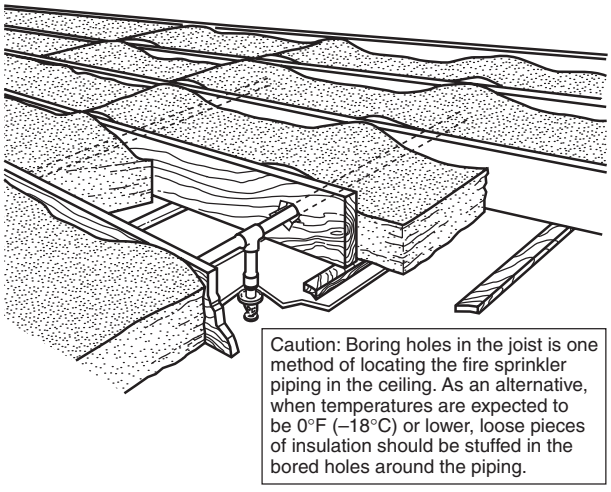

FIGURE A.5.3.2(c) Insulation Recommendations — Arrangement 3.

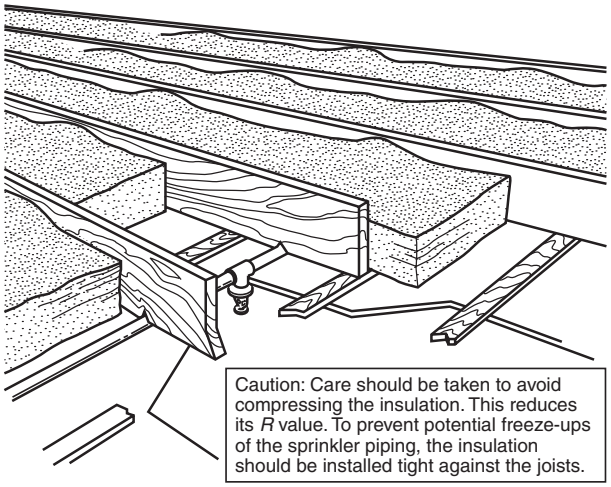

FIGURE A.5.3.2(d) Insulation Recommendations — Arrangement 4.

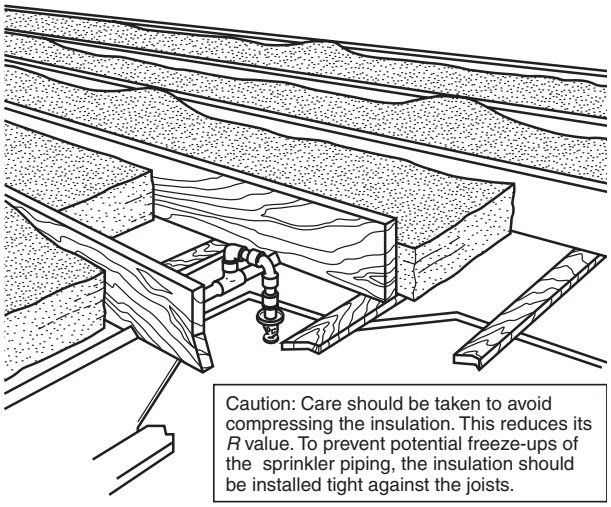

FIGURE A.5.3.2(e) Insulation Recommendations — Arrangement 5.

A.5.3.2(1) Antifreeze solutions can be used for maintaining automatic sprinkler protection in small, unheated areas. Because of the cost of refilling the system or replenishing small leaks, antifreeze solutions are recommended only for systems not exceeding 40 gal (151 L).

Listed CPVC sprinkler pipe and fittings should be protected from freezing only with glycerine. The use of diethylene, ethylene, or propylene glycols is specifically prohibited. Laboratory testing shows that glycol-based antifreeze solutions present a chemical environment detrimental to CPVC. Listed polybutylene sprinkler pipe and fittings can be protected with glycerine, diethylene glycol, ethylene glycol, or propylene glycol.

A.6.1.4.1.2 Branch lines have been intentionally left out of this paragraph because it is an unacceptable practice to heat trace and insulate branch lines.

Copyright National Fire Protection Association
Provided by IHS under license with NFPA
No reproduction or networking permitted without license from IHS
Not for Resale

A.6.2.7(18) Where typical branch lines prevail, it will be necessary to size only one line.

A.6.4.1 Underground mains and lead-in connections to system risers are required to be flushed before a connection is made to sprinkler piping in order to remove any foreign materials that have entered the underground piping during the course of the installation.

A.6.4.2 Testing of a system can be accomplished by pressurizing the system with water and checking visually for leakage at each joint or coupling unless specifically allowed by the manufacturer(s) of both the pipe and the fittings in their installation instructions.

Where pressure testing systems have rigid thermoplastic piping, such as listed CPVC, or flexible piping, such as listed polybutylene, the sprinkler system should be filled with water. The air should be bled from the highest and farthest sprinklers before the test pressure is applied. Compressed air or compressed gas never should be used for pressure testing CPVC piping. Testing with air pressure is permitted for polybutylene piping where conducted in accordance with the testing procedures of 16.2.2.1 of NFPA 13, *Standard for the Installation of Sprinkler Systems*.

Fire department connections are not required for all systems covered by this standard but can be installed at the discretion of the owner. In these cases, hydrostatic tests in accordance with NFPA 13 are required.

Dry systems also should be tested by placing the system under air pressure. Any leak that results in a drop in system pressure greater than 2 psi (0.14 bar) in 24 hours should be corrected. Leaks should be identified using soapy water brushed on each joint or coupling. The presence of bubbles indicates a leak. This test should be made prior to concealing the piping.

A.6.6.3 The connection to city mains for fire protection is often subject to local regulation of metering and backflow prevention requirements. Preferred and acceptable water supply arrangements are shown in Figure A.6.6.3(a), Figure A.6.6.3(b), and Figure A.6.6.3(c). Where it is necessary to use a meter between the city water main and the sprinkler system supply, an acceptable arrangement as shown in Figure A.6.6.3(c) can be used. Under these circumstances, the flow characteristics of the meter are to be included in the hydraulic calculation of the system. Where a tank is used for both domestic and fire protection purposes, a low water alarm that actuates when the water level falls below 110 percent of the minimum quantity specified in 6.6.2 should be provided.

A.6.6.5 Table A.6.6.5(a) and Table A.6.6.5(b) can be used to determine a domestic design demand. Using Table A.6.6.5(a), the total number of water supply fixture units downstream of any point in the piping serving both sprinkler and domestic needs is determined. Using Table A.6.6.5(b), the appropriate total flow allowance is determined and added to the sprinkler demand at the total pressure required for the sprinkler system at that point.

A.6.7.2 These connections should be installed so that the valve can be opened fully and for a sufficient time period to ensure a proper test without causing water damage. The test connection should be designed and sized to verify the sufficiency of the water supply and alarm mechanisms.

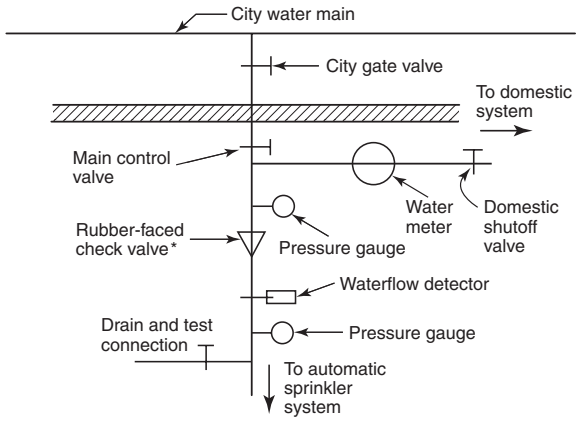

* Rubber-faced check valves are optional.

FIGURE A.6.6.3(a) Preferable Arrangement.

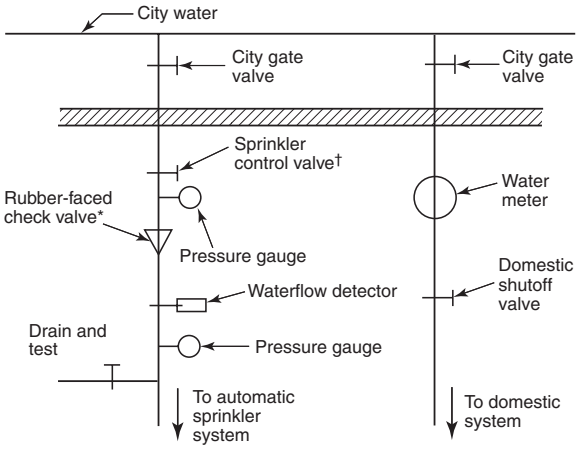

* Rubber-faced check valves are optional.
† Optional valve: See 6.7.1.2.

FIGURE A.6.6.3(b) Acceptable Arrangement with Valve Supervision — Option 1 ***(see 6.7.1.2)*****.**

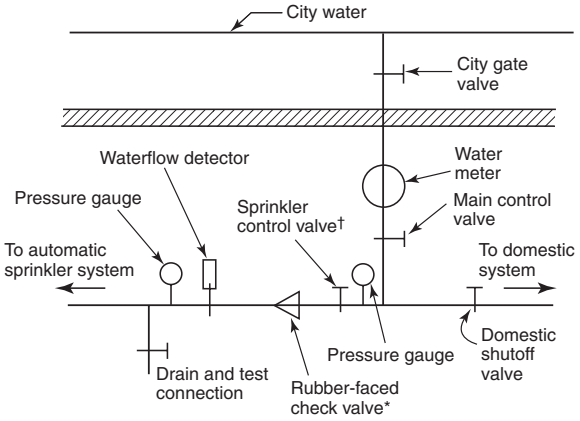

* Rubber-faced check valves are optional.
† Optional valve: See 6.7.1.2.

FIGURE A.6.6.3(c) Acceptable Arrangement with Valve Supervision — Option 2 ***(see 6.7.1.2)*****.**

Copyright National Fire Protection Association
Provided by IHS under license with NFPA
No reproduction or networking permitted without license from IHS
Not for Resale

Table A.6.6.5(a) Fixture Load Values

Facility Type	Unit
Private Facilities (those within individual dwelling units)	
Bathroom group with flush tank (including lavatory, water closet, and bathtub with shower)	6
Bathroom group with flush valve	8
Bathtub	2
Dishwasher	1
Kitchen sink	2
Laundry trays	3
Lavatory	1
Shower stall	2
Washing machine	2
Water closet with flush valve	6
Water closet with flush tank	3
Public Facilities	
Bathtub	4
Drinking fountain	0
Kitchen sink	4
Lavatory	2
Service sink	3
Shower head	4
Urinal with 1 in. (25.4 mm) flush valve	10
Urinal with ¾ in. (19 mm) flush valve	5
Urinal with flush tank	3
Washing machine [8 lb (3.63 kg)]	3
Washing machine [16 lb (7.26 kg)]	4
Water closet with flush valve	10
Water closet with flush tank	5

Table A.6.6.5(b) Total Estimated Domestic Demand

Total Fixture Load Units [from Table A.6.6.5(a)]	Total Demand			
	For Systems with Predominately Flush Tanks		For Systems with Predominately Flush Valves	
	gpm	L/min	gpm	L/min
1	3	11.25	—	—
2	5	18.75	—	—
5	10	37.5	15	56
10	15	56	25	94
20	20	75	35	13
35	25	94	45	169
50	30	113	50	187
70	35	131	60	225
100	45	169	70	262
150	55	200	80	300
200	65	244	90	337
250	75	261	100	375
350	100	375	125	469
500	125	469	150	562
750	175	656	175	656
1000	200	750	200	750
1500	275	1031	275	1031
2000	325	1219	325	1219
3500	500	1875	500	1875

A.6.7.3 These connections should be installed so that the valve can be opened fully and for a sufficient time period to ensure a proper test without causing water damage. The test connection should be designed and sized to verify the sufficiency of the water supply and alarm mechanisms.

A.6.7.4 The fire department connection should be connected to the system riser. For single systems, it is an acceptable arrangement to attach the fire department connection to any point in the system, provided the pipe is at least as large as the riser.

A.6.7.6 Sprinkler piping should be adequately secured to restrict the movement of piping upon sprinkler operation. The reaction forces caused by the flow of water through the sprinkler could result in displacement of the sprinkler, thereby adversely affecting sprinkler discharge. Listed CPVC pipe and listed PB pipe have specific requirements for piping support to include additional pipe bracing at sprinklers.

A.6.7.7.1.5.1 Sprinklers having a temperature rating of 135°F to 170°F (57°C to 77°C) are classified as ordinary temperature–rated sprinklers.

A.6.7.7.1.5.2 Sprinklers having a temperature rating of 175°F to 225°F (79°C to 107°C) are classified as intermediate temperature–rated sprinklers.

A.6.7.7.1.5.6 Modern multiple-family building floor plans incorporate certain architectural characteristics or features that may initially seem to make absolute coverage of every single square foot of floor area a challenge. These features include angled walls, wing walls, slightly indented walls, and various soffit configurations.

The "problem" arises when one erroneously considers water discharging from a residential sprinkler to travel only in an absolute straight line, as if it were beams of light. When this approach is taken, small [1 to 3 ft^2 (0.09 to 0.28 m^2)] typically triangular "shadowed areas" may in theory be formed on the floor adjacent to their referenced architectural features. The shadowed areas are purely on paper and do not take into account the dynamic variables affecting sprinkler discharge and distribution. It is hardly conceivable that anything located within one of these areas could remain dry during adjacent sprinkler discharge. The Committee recognizes that such small theoretically shadowed floor areas are not an issue. Residential sprinkler distribution patterns are specifically intended to provide superior wall-wetting capability. Survivability of the occupants is more dependent on such wall-wetting than on absolute floor coverage.

Though not specifically referenced as such, in fact, NFPA 13, *Standard for the Installation of Sprinkler Systems*, already permits an appreciable amount of "shadowing" by way of the basic obstruction figures and tables for various sprinkler applications. Take, for example, Figure 8.10.6.2.1.3 of NFPA 13, Minimum Distance from Obstruction (residential upright and pendent spray sprinklers). Consider a residential sprinkler spaced 10 ft (3.05 m) off of wall. A 12 in. (305 mm) round column located in the direction of the wall and 4 ft (1.22 m) away from the sprinkler would create an allowable "shadowed" area of approximately 8.6 ft^2 (0.8 m^2), using the line-of-sight approach.

Copyright National Fire Protection Association
Provided by IHS under license with NFPA
No reproduction or networking permitted without license from IHS
Not for Resale

The intent of NFPA 13R is to provide economically viable, flashover-preventing, survivability-enhancing residential sprinkler layouts. It is not the intent of NFPA to require additional sprinklers for these 1 to 3 ft^2 (0.09 to 0.28 m^2) areas. Additionally, the methods described in 6.7.7.1.5.6 are not intended for any use outside of this specific residential dwelling unit application.

A.6.8.1.1.1 The minimum pressure and flow requirements need to be satisfied while also meeting the requirements of the formula $q = K(p)^{0.5}$. If a sprinkler with a K-factor of 4.3 is listed to cover an area of 18 ft × 18 ft (5.49 m × 5.49 m) at 16.2 gpm (61.3 L/min), the minimum pressure is required to be 14.2 psi (0.98 bar) so that the flow is achieved. Likewise, if a sprinkler with a K-factor of 5.6 is covering an area 12 ft × 12 ft (3.66 m × 3.66 m), the minimum flow is required to be 14.8 gpm (56 L/min) [the flow at 7 psi (0.48 bar)] even though a flow of 7.2 gpm (27.3 L/min) will satisfy the density criteria.

A.6.8.1.1.1.2 Sprinklers need to be used in accordance with their listed areas and density. *(See Figure A.6.8.1.1.1.2.)*

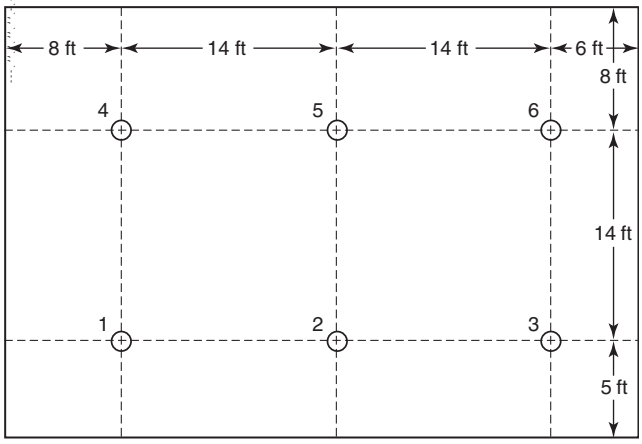

FIGURE A.6.8.1.1.1.2 Determining Required Flow.

A.6.8.1.2 It is intended that the design area is to include up to four adjacent sprinklers that produce the greatest water demand within the compartment. *[See Figure A.6.8.1.2(a) and Figure A.6.8.1.2(b).]*

Residential sprinklers are currently listed for use under flat, smooth, horizontal ceilings only. Sloped, beamed, and pitched ceilings could require special design features such as larger flows or a design for five or more sprinklers to operate in the compartment.

All residential sprinklers have been investigated and are currently listed for use under flat, smooth, horizontal ceilings. Some residential sprinklers have been investigated and listed for use under specific smooth sloped or horizontal beamed ceilings. Where ceilings have configurations outside the scope of current listings, special sprinkler system design features such as larger flows, a design of five or more sprinklers to operate in a compartment, or both, may be required.

A.6.8.1.3.1.3 There are construction features such as large horizontal beamed ceilings, sloped ceilings having beams, and steeply sloped ceilings that are outside of the current listings. In these situations, sprinklers can be installed in a manner acceptable to the authority having jurisdiction to achieve the results specified in this standard. In making these determinations, consideration should be given to factors influencing sprinkler system performance such as sprinkler response characteristics, impact of obstructions on sprinkler discharge, and number of sprinklers anticipated to operate in the event of a fire.

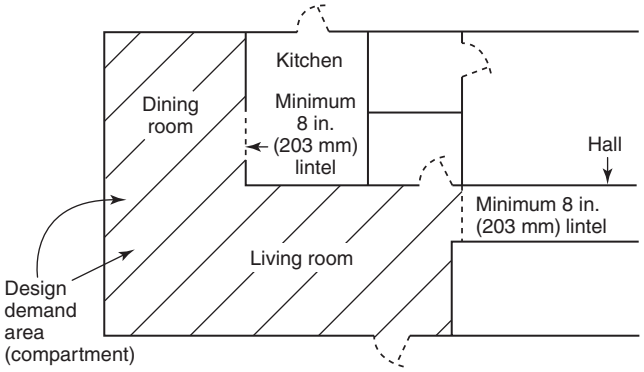

FIGURE A.6.8.1.2(a) Sprinkler Design Areas for Typical Residential Occupancy — Without Lintel.

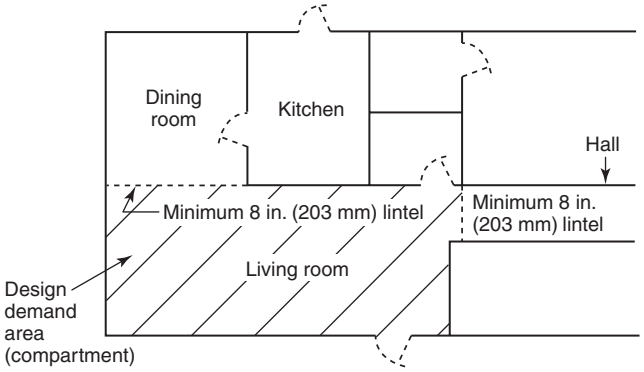

FIGURE A.6.8.1.2(b) Sprinkler Design Areas for Typical Residential Occupancy — with Lintel.

A.6.8.1.5.3 Where the obstruction criteria established by this standard are followed, sprinkler spray patterns will not necessarily get water to every square foot of space within a room. As such, a sprinkler in a room with acceptable obstructions as outlined in this standard may not be capable of passing the fire test (specified by UL 1626, *Residential Sprinklers for Fire Protection Service*, and other similar laboratory standards) if the fire is started in one of these dry areas. This is not to be interpreted as a failure of the sprinklers. The laboratory fire tests are sufficiently challenging to the sprinkler without additional obstructions as a safety factor to account for the variables that actually occur in dwellings, including acceptable obstructions to spray patterns.

The objective is to position sprinklers so that the response time and discharge are not unduly affected by obstructions such as ceiling slope, beams, light fixtures, or ceiling fans. The rules in this section, while different from the obstruction rules of NFPA 13, *Standard for the Installation of Sprinkler Systems*, provide a reasonable level of life safety while maintaining the philosophy of keeping NFPA 13D, *Standard for the Installation of*

Copyright National Fire Protection Association
Provided by IHS under license with NFPA
No reproduction or networking permitted without license from IHS
Not for Resale

Sprinkler Systems in One- and Two-Family Dwellings and Manufactured Homes, relatively simple to apply and enforce.

Fire testing has indicated the need to wet walls in the area protected by residential sprinklers at a level closer to the ceiling than that accomplished by standard sprinkler distribution. Where beams, light fixtures, sloped ceilings, and other obstructions occur, additional residential sprinklers could be necessary to achieve proper response and distribution, and a greater water supply could be necessary.

Small areas created by architectural features such as planter box windows, bay windows, and similar features can be evaluated as follows:

(1) Where no additional floor area is created by the architectural feature, no additional sprinkler protection is required.
(2) Where additional floor area is created by an architectural feature, no additional sprinkler protection is required, provided all of the following conditions are met:
   (a) The floor area does not exceed 18 ft^2 (1.7 m^2).
   (b) The floor area is not greater than 2 ft (0.65 m) in depth at the deepest point of the architectural feature to the plane of the primary wall where measured along the finished floor.
   (c) The floor is not greater than 9 ft (2.9 m) in length where measured along the plane of the primary wall.
   (d) Measurement from the deepest point of the architectural feature to the sprinkler should not exceed the maximum listed spacing of the sprinkler. The hydraulic design is not required to consider the area created by the architectural feature.

The rules on 6.8.1.5.3.2 and 6.8.1.5.3.3 were developed from a testing series conducted by the National Fire Sprinkler Association and The Viking Corporation that included fire modeling, sprinkler response tests, sprinkler distribution tests, and full-scale fire tests (Valentine and Isman, *Interaction of Residential Sprinklers, Ceiling Fans and Similar Obstructions*, National Fire Sprinkler Association, November 2005). This test series, along with additional industry experience, shows that there is a difference between obstructions that are tight to the ceiling and obstructions that hang down from the ceiling, allowing spray over the top. Residential sprinklers require high wall wetting, which means that they tend to spray over obstructions that hang down from the ceiling. The test series showed that the fan blades where not significant obstructions and that as long as the sprinkler was far enough from the fan motor housing (measured from the center of the housing), the sprinkler could control a fire on the other side of the fan in a small room. In larger rooms, the sprinkler will need to be augmented by additional sprinklers on the other side of the fan. The test series showed that the fan on low or medium speed did not make a significant difference in sprinkler performance. On high speed (pushing air down) the fan did impact sprinkler performance, but fire control was still achieved in small rooms. In larger rooms, it is expected that additional sprinklers would be installed. The test series also showed that the fan blowing down was more significant than the fan pulling air up.

The rules in 6.8.1.5.3.6 were developed from years of experience with NFPA 13 obstruction rules and an additional test series conducted by the National Fire Sprinkler Association with the help of Tyco International (Valentine and Isman, *Kitchen Cabinets and Residential Sprinklers*, National Fire Sprinkler Association, November 2005), which included fire modeling, distribution tests, and full-scale fire tests. The test series showed that pendent sprinklers definitely provide protection for kitchens, even for fires that start under the cabinets. The information in the series was less than definitive for sidewall sprinklers, but distribution data show that sprinklers in the positions in this standard provide adequate water distribution in front of the cabinets and that sidewall sprinklers should be able to control a fire that starts under the cabinets. When protecting kitchens or similar rooms with cabinets, the pendent sprinkler should be the first option. If pendent sprinklers cannot be installed, the next best option is a sidewall sprinkler on the opposite wall from the cabinets, spraying in the direction of the cabinets. The third best option is the sidewall sprinkler on the same wall as the cabinets on a soffit flush with the face of the cabinet. The last option should be putting sprinklers on the wall back behind the face of the cabinet because this location is subject to being blocked by items placed on top of the cabinets. It is not the intent of the committee to require sprinklers to be installed under kitchen cabinets.

A.6.8.2 It is only the intent of NFPA 13R to reference the sprinkler discharge (flow and pressure), number of design sprinklers, and position of sprinklers (distance from walls, ceilings, and other sprinklers) requirements of NFPA 13, *Standard for the Installation of Sprinkler Systems*. Other rules from NFPA 13 such as sprinklering of combustible concealed spaces, hose stream demand, and water supply duration are not intended to be referenced by 6.8.2. It is also the intent of 6.8.2 to apply to those systems or portions of systems that are outside the dwelling unit but have been determined to be considered residential or incidental to residential and within the scope of this standard. (*Also see A.1.1.*)

A.6.8.3.3 Residential sprinklers and quick-response sprinklers at 0.05 gpm/ft^2 (2.04 L/min/m^2) densities have not been tested for use in garages. However, field experience has shown that they will activate, sound an alarm, and provide water distribution that will assist in controlling a fire.

A.6.9.2 A room is still considered a bathroom if it contains just a toilet. Additionally, two bathrooms can be adjacent to each other and are considered separate rooms, provided they are enclosed with the required level of construction.

A.6.9.6 Concealed spaces are permitted to have small openings such as grilles for return air when the space is being used as a plenum. Such small openings do not disqualify the space from being considered as a concealed space, and sprinklers are still permitted to be omitted.

A.6.10 The responsibility for properly maintaining a sprinkler system is that of the owner or manager, who should understand the sprinkler system operation. A minimum monthly maintenance program should include the following:

(1) Visual inspection of all sprinklers to ensure against obstruction of spray.
(2) Inspection of all valves to ensure that they are open.
(3) Testing of all waterflow devices.
(4) Testing of the alarm system, where installed. Note that where it is likely that the test will result in a fire department response, notification to the fire department should be made prior to the test.
(5) Operation of pumps, where employed. (NFPA 20, *Standard for the Installation of Stationary Pumps for Fire Protection.*)
(6) Checking of the pressure of air used with dry systems.
(7) Checking of the water level in tanks.

Copyright National Fire Protection Association
Provided by IHS under license with NFPA
No reproduction or networking permitted without license from IHS
Not for Resale

(8) Special attention to ensure that sprinklers are not painted either at the time of installation or during subsequent redecoration. When sprinkler piping or areas next to sprinklers are being painted, the sprinklers should be protected by covering them with a bag, which should be removed immediately after painting is finished.

For further information, see NFPA 25, *Standard for the Inspection, Testing, and Maintenance of Water-Based Fire Protection Systems*.

Annex B Informational References

B.1 Referenced Publications. The documents or portions thereof listed in this annex are referenced within the informational sections of this standard and are not part of the requirements of this document unless also listed in Chapter 2 for other reasons.

B.1.1 NFPA Publications. National Fire Protection Association, 1 Batterymarch Park, Quincy, MA 02169-7471.

NFPA 13, *Standard for the Installation of Sprinkler Systems*, 2007 edition.

NFPA 13D, *Standard for the Installation of Sprinkler Systems in One- and Two-Family Dwellings and Manufactured Homes*, 2007 edition.

NFPA 20, *Standard for the Installation of Stationary Pumps for Fire Protection*, 2007 edition.

NFPA 25, *Standard for the Inspection, Testing, and Maintenance of Water-Based Fire Protection Systems*, 2002 edition.

B.1.2 Other Publications.

B.1.2.1 ASTM Publications. American Society for Testing and Materials, 100 Barr Harbor Drive, P.O. Box C700, West Conshohocken, PA 19428-2959.

ASTM D 3309, *Standard Specification for Polybutylene (PB) Plastic Hot- and Cold-Water Distribution Systems*, 1995.

ASTM F 437, *Standard Specification for Threaded Chlorinated Poly (Vinyl Chloride) (CPVC) Plastic Pipe Fittings, Schedule 80*, 1996.

ASTM F 438, *Standard Specification for Socket-Type Chlorinated Poly (Vinyl Chloride) (CPVC) Plastic Pipe Fittings, Schedule 40*, 1997.

ASTM F 439, *Standard Specification for Socket-Type Chlorinated Poly (Vinyl Chloride) (CPVC) Plastic Pipe Fittings, Schedule 80*, 1997.

ASTM F 442, *Standard Specification for Chlorinated Poly (Vinyl Chloride) (CPVC) Plastic Pipe (SDR-PR)*, 1997.

IEEE/ASTM SI-10, *Standard for Use of the International System of Units (SI): the Modern Metric System*, 1997.

B.1.2.2 UL Publications. Underwriters Laboratories Inc., 333 Pfingsten Road, Northbrook, IL 60062-2096.

UL 1626, *Residential Sprinklers for Fire Protection Service*, 2001.

B.1.2.3 Other Publications.

National Fire Sprinkler Association, P.O. Box 1000, Patterson, N.Y. 12563.

Valentine and Isman, *Kitchen Cabinets and Residential Sprinklers*, 2005.

Valentine and Isman, *Interaction of Residential Sprinklers, Ceiling Fans and Similar Obstructions*, 2005.

B.2 Informational References. (Reserved)

B.3 References for Extracts in Informational Sections. (Reserved)

--`,,```,,,,````-`-`,,`,,`,`,,`---

Copyright National Fire Protection Association
Provided by IHS under license with NFPA
No reproduction or networking permitted without license from IHS

Not for Resale

Index

Copyright © 2006 National Fire Protection Association. All Rights Reserved.

The copyright in this index is separate and distinct from the copyright in the document that it indexes. The licensing provisions set forth for the document are not applicable to this index. This index may not be reproduced in whole or in part by any means without the express written permission of NFPA.

-A-

Acceptance tests 6.3.1
Hydrostatic pressure tests 6.4.2, A.6.4.2
Underground mains and connections, flushing 6.4.1, A.6.4.1
Alarms, waterflow ..... 6.7.8.1 to 6.7.8.3
Definition 3.3.12
Alarm systems, building 6.7.8.2, 6.7.8.4
Antifreeze systems ..... 5.3.2(1), 5.3.3, A.5.3.2(1)
Approved/approvals
Definition 3.2.1, A.3.2.1
Devices and materials 5.1.2
Drain valves and test valves 5.2.12.3
System 6.3
Working plans 6.2.1, 6.2.2
Authority having jurisdiction (definition) 3.2.2, A.3.2.2
Automatic sprinklers ..... *see* Sprinklers

-B-

Backflow prevention devices 6.7.1.6
Barrier, thermal (definition) 3.3.10
Bathroom 6.9.2, A.6.9.2
Definition 3.3.1, A.3.3.1
Brazed joints 5.2.8, 5.2.9

-C-

Cabinets 6.8.1.5.3.6
Caps, protective 5.1.1.8, A.5.1.1.8.1, A.5.1.1.8.2
Ceiling pockets, sprinklers for 6.8.1.5.4
Ceilings
Drop-out 6.7.7.5
Horizontal 5.1.1.4.2
Open-grid 6.7.7.4
Sloped 5.1.1.4.2, 6.8.1.3.1.1
Sprinkler clearance from ..... 4.3.1(6)
Sprinkler locations, hot gases diverted from A.1.1
Unusually high A.1.1
Check valves (definition) 3.3.11.1
Chlorinated polyvinyl chloride (CPVC) piping 5.2.2.2, A.5.2.2.2
Freezing protection ..... A.5.3.2(1)
Materials/dimensions 5.2.10.2, A.5.2.10.2
Closets 6.8.1.5.3.1, 6.9.4
Clothes and linen 6.9.3
Exterior 6.9.7
Compartments 4.2
Concealed spaces 6.9.6, A.6.9.6
Concealed sprinklers 5.1.1.5.3, 5.1.1.6.2, 5.1.1.6.3
Connections
Fire department 6.7.4, A.6.7.4
Lead-in underground 6.4.1, A.6.4.1
Nonfire protection 6.6.6
Contractor's material and test certificates ..... 6.3.2, Fig. 6.3.2, 6.3.3
Control valves 5.2.12.1.3, 5.2.12.4, 6.7.1, A.5.2.12.4
Definition 3.3.11.2
Pressure gauge connections 5.2.13.1, 5.2.13.2
Copper piping joints 5.2.8, 5.2.9
Corridors 6.7.7.2.2
Open 6.9.5
Corrosion, protection from 6.1.3.1, 6.1.4.2
Coverage, sprinkler 6.8.1.3, A.6.8.1.3.1.3
Cover plates 5.1.1.6, A.5.1.1.6.2

-D-

Definitions ..... Chap. 3
Design, sprinkler system ..... 6.5, 6.8, A.6.8.1.1.1 to A.6.8.3.3
Design discharge 6.8.1.1, A.6.8.1.1.1
Definition 3.3.3
Domestic demand 6.6.5, A.6.6.5
Garages 6.8.3, A.6.8.3.3
Inside dwelling units ..... 6.8.1, A.6.8.1.1.1 to A.6.8.1.5.3
Location of sprinklers 6.9, A.6.9.2, A.6.9.6
Outside dwelling units 6.8.2, A.6.8.2
Pipe sizing 6.8.4
Detectors, waterflow (definition) 3.3.13
Drains 6.7.2, A.6.7.2
Pressure gauge connections 5.2.13.1, 5.2.13.2
Drop-out ceilings 6.7.7.5
Dry pipe sprinkler systems ..... 5.3.2(2), 5.3.3
Definition 3.3.8.1
Drains 6.7.2.4
Dry pipe underground 6.1.3
Dwelling units (definition) 3.3.4

-E-

Elevated tanks ..... 6.6.3(2)
Equivalency to standard 1.4
Escutcheons 5.1.1.6, A.5.1.1.6.2

-F-

Finish material, sprinklers 5.1.1.5.3, 5.1.1.7
Fire casualties, locations in apartments of ..... Table A.1.2
Fire department connections 6.7.4, A.6.7.4
Fire pumps 6.6.3, 6.6.4, A.6.6.3
Fire tests A.1.1
Fittings ..... 5.2.5 to 5.2.7, 5.2.10, 5.2.11, A.5.2.10.2
Flushing of underground mains and connections 6.4.1, A.6.4.1
Freezing, protection from 5.3.2, 5.3.3, 6.1.4.1, A.5.3.2, A.6.1.4.1.2

-G-

Garages 6.8.3, A.6.8.3.3
Gauges, pressure 5.2.13, 6.7.5

-H-

Hazard classifications ..... *see* Light hazard occupancy; Ordinary hazard occupancy
Hazardous areas, protection of piping in 6.1.4.3
Hydrostatic pressure tests 6.4.2, A.6.4.2

-I-

Identification
Fire department connections 6.7.4.3
Sprinklers 5.1.1.2, A.5.1.1.2
Valves 5.2.12.4, A.5.2.12.4
Installation, sprinkler system ..... 6.5, 6.7, A.6.7.2 to A.6.7.4, A.6.7.6, A.6.7.7.1.5.1 to A.6.7.7.1.5.6

-L-

Labeled (definition) 3.2.3
Labeled devices and materials 4.5

Copyright National Fire Protection Association
Provided by IHS under license with NFPA
No reproduction or networking permitted without license from IHS
Not for Resale

Light hazard occupancy
Definition 3.3.5.1, A.3.3.5.1
Pipe or tube listed for 5.2.2.3
Special sprinklers 5.1.1.4.2
Listed (definition) 3.2.4
Listed devices and materials 4.5, 5.1.2
Indicating valves 5.2.12.1.3
Sprinklers 5.1.1.1, 5.1.1.3.2, 5.1.1.4, 6.8.1.3.1, A.6.8.1.3.1.3

-M-

Maintenance, system 6.10, A.6.10
Measurement, units of 1.5, A.1.5.1, A.1.5.4
Mobile homes ..... Fig. A.1.1(b)
Multipurpose piping systems 6.6.5, 6.7.1.1, A.6.6.5

-N-

Nonfire protection connections 6.6.6
Number of design sprinklers 6.8.1.2, A.6.8.1.2

-O-

Obstructions to sprinklers 6.8.1.5.3, A.6.8.1.5.3
Occupancy limitations 5.1.1.4
Open-grid ceilings 6.7.7.4
Ordinary hazard occupancy
Group 1 (definition) 3.3.5.2, A.3.3.5.2
Group 2 (definition) 3.3.5.3, A.3.3.5.3
Pipe or tube listed for light hazard, use of 5.2.2.3
Special sprinklers 5.1.1.4.2
Ornamental sprinklers 5.1.1.5.3

-P-

Painting 5.1.1.5.3, 5.1.1.7
Pendent sprinklers
Dry-pendent 6.1.2.3
Obstructions to 6.8.1.5.3.2, 6.8.1.5.3.4
Position of 6.8.1.5.1
Return bends ..... 6.1.2.1 to 6.1.2.3
Pipe threads, sprinklers 5.1.1.3.2
Piping ... 5.2, A.5.2.1; *see also* Chlorinated polyvinyl chloride (CPVC) piping
Dry pipe underground 6.1.3
Listed indicating valves 5.2.12.1.3
Protection of 6.1.4, A.6.1.4.1.2
Corrosion, protection against 6.1.4.2
Freezing, protection against 6.1.4.1, A.6.1.4.1.2
Hazardous areas, protection in 6.1.4.3
Mechanical damage, risers subject to 6.1.4.4
Sizing 6.8.4
Support 6.7.6, A.6.7.6
Preaction sprinkler systems ..... 5.3.2(3), 5.3.3
Definition 3.3.8.2
Pressure
Operating, sprinklers 6.8.1.4
System working ..... *see* System working pressure
Pressure gauges 5.2.13, 6.7.5
Pressure tanks ..... 6.6.3(3)
Private service mains 6.1.4.3.1, 6.1.4.3.2
Protective caps and straps 5.1.1.8, A.5.1.1.8.1, A.5.1.1.8.2
Pumps
Fire 6.6.4
Water 6.6.3
Purpose of standard 1.2, A.1.2

-Q-

Quick-response sprinklers ..... 6.7.7.1.3, 6.7.7.1.4, 6.7.7.2.1, 6.7.7.3, 6.8.2.2(2), 6.8.3.3, A.1.1, A.6.8.3.3

-R-

Reconditioned equipment 5.1.4
References ..... Chap. 2
Residential occupancies (definition) 3.3.6
Residential sprinklers 5.1.1.3.3, 6.7.7.1.1, 6.7.7.1.2, 6.7.7.2.2, 6.8.1.1.1, A.1.1, A.6.8.1.1.1
Corridors 6.7.7.2.2
Definition 3.3.7.2
Garages 6.8.3.3, A.6.8.3.3
Obstructions to 6.8.1.5.3, A.6.8.1.5.3
Outside dwelling units 6.7.7.2
Position of 6.8.1.5, A.6.8.1.5.3
Specific coverage criteria 6.8.1.3.1, A.6.8.1.3.1.3
Retroactivity of standard 1.3
Return bends 6.1.2

-S-

Scope of standard 1.1, A.1.1
Shall (definition) 3.2.5
Shutoff valves ..... *see* Control valves
Sidewall sprinklers
Obstructions to 6.8.1.5.3.3, 6.8.1.5.3.5
Position of 6.8.1.5.2
SI units 1.5, A.1.5.1, A.1.5.4
Sloped ceilings 5.1.1.4.2, 6.8.1.3.1.1
Soffits 6.8.1.5.3.6
Spare sprinklers 6.5.1
Sprinklered throughout, fully 4.1
Sprinklers ..... *See also* Residential sprinklers
Automatic 5.1.1.5.1
Definition 3.3.7.1
Corrosion-resistant 5.1.1.5.2
Coverage 6.8.1.3, A.6.8.1.3.1.3
Discharge characteristics 5.1.1.3
Identification 5.1.1.2, A.5.1.1.2
Operating pressure 6.8.1.4
Painting and finish material 5.1.1.5.3, 5.1.1.7
Protective caps and straps 5.1.1.8, A.5.1.1.8.1, A.5.1.1.8.2
Spacing, location, and position 4.3.1
Spare 6.5.1
Special 5.1.1.4.2
Temperature characteristics 5.1.1.5, A.5.1.1.5
Sprinkler systems ..... *see also* Dry pipe sprinkler systems; Preaction sprinkler systems
Approval of 6.2.1, 6.2.2, 6.3
Bulb-type 5.1.1.5.4, 5.1.1.5.5
Components ..... Chap. 5
Definition 3.3.8
Piping ..... *see* Piping
Return bends 6.1.2
System protection area limitations 6.1.1
Types 5.3, A.5.3.2
Standard (definition) 3.2.6
Straps, protective 5.1.1.8, A.5.1.1.8.1, A.5.1.1.8.2
System working pressure 3.3.9, 5.1.3, 5.2.13.3
Definition 3.3.9

-T-

Tanks
Elevated ..... 6.6.3(2)
Pressure ..... 6.6.3(3)
Temperature ratings, sprinklers ..... 6.7.7.1.5, A.6.7.7.1.5.1 to A.6.7.7.1.5.6
Test connections 6.5.4, 6.7.3, A.6.7.3
Tests
Acceptance ..... *see* Acceptance tests
Fire A.1.1
Thermal barrier (definition) 3.3.10
Tube ..... *see* Piping

-U-

Underground pipe
Dry 6.1.3
Flushing mains and connections 6.4.1, A.6.4.1

Copyright National Fire Protection Association
Provided by IHS under license with NFPA
No reproduction or networking permitted without license from IHS
Not for Resale

Units of measurement 1.5, A.1.5.1, A.1.5.4
Upright sprinklers, position of 6.8.1.5.1

-V-

Valves 5.2.12, A.5.2.12.4
Check (definition) 3.3.11.1
Closure time 5.2.12.1.2
Control ..... *see* Control valves
Drain valves 5.2.12.3
Identification 5.2.12.4, A.5.2.12.4
Listed indicating valves 5.2.12.1.3
Pressure requirements 5.2.12.1.1
Test valves 5.2.12.3
Wafer-type 5.2.12.2

-W-

Waterflow alarms ..... 6.7.8.1 to 6.7.8.3
Definition 3.3.12
Waterflow detectors (definition) 3.3.13
Water supply 6.6, A.6.6.3
Listed indicating valves for 5.2.12.1.3
Raw water source, mill pond, or open-top reservoir, pendent sprinkler supplied from 6.1.2.1
Wet pipe sprinkler systems 5.3.1
Definition 3.3.8.3
Working plans ..... 6.2, 6.2.7(18)
Working pressure, system ..... *see* System working pressure

Copyright National Fire Protection Association
Provided by IHS under license with NFPA
No reproduction or networking permitted without license from IHS
Not for Resale

Sequence of Events Leading to Issuance of an NFPA Committee Document

Step 1: Call for Proposals

- Proposed new Document or new edition of an existing Document is entered into one of two yearly revision cycles, and a Call for Proposals is published.

Step 2: Report on Proposals (ROP)

- Committee meets to act on Proposals, to develop its own Proposals, and to prepare its Report.
- Committee votes by written ballot on Proposals. If two-thirds approve, Report goes forward. Lacking two-thirds approval, Report returns to Committee.
- Report on Proposals (ROP) is published for public review and comment.

Step 3: Report on Comments (ROC)

- Committee meets to act on Public Comments to develop its own Comments, and to prepare its report.
- Committee votes by written ballot on Comments. If two-thirds approve, Report goes forward. Lacking two-thirds approval, Report returns to Committee.
- Report on Comments (ROC) is published for public review.

Step 4: Technical Report Session

- "*Notices of intent to make a motion"* are filed, are reviewed, and valid motions are certified for presentation at the Technical Report Session. ("Consent Documents" that have no certified motions bypass the Technical Report Session and proceed to the Standards Council for issuance.)
- NFPA membership meets each June at the Annual Meeting Technical Report Session and acts on Technical Committee Reports (ROP and ROC) for Documents with "certified amending motions."
- Committee(s) vote on any amendments to Report approved at NFPA Annual Membership Meeting.

Step 5: Standards Council Issuance

- Notification of intent to file an appeal to the Standards Council on Association action must be filed within 20 days of the NFPA Annual Membership Meeting.
- Standards Council decides, based on all evidence, whether or not to issue Document or to take other action, including hearing any appeals.

Committee Membership Classifications

The following classifications apply to Technical Committee members and represent their principal interest in the activity of the committee.

M *Manufacturer:* A representative of a maker or marketer of a product, assembly, or system, or portion thereof, that is affected by the standard.

U *User:* A representative of an entity that is subject to the provisions of the standard or that voluntarily uses the standard.

I/M *Installer/Maintainer:* A representative of an entity that is in the business of installing or maintaining a product, assembly, or system affected by the standard.

L *Labor:* A labor representative or employee concerned with safety in the workplace.

R/T *Applied Research/Testing Laboratory:* A representative of an independent testing laboratory or independent applied research organization that promulgates and/or enforces standards.

E *Enforcing Authority:* A representative of an agency or an organization that promulgates and/or enforces standards.

I *Insurance:* A representative of an insurance company, broker, agent, bureau, or inspection agency.

C *Consumer:* A person who is, or represents, the ultimate purchaser of a product, system, or service affected by the standard, but who is not included in the *User* classification.

SE *Special Expert:* A person not representing any of the previous classifications, but who has a special expertise in the scope of the standard or portion thereof.

NOTES;
1. "Standard" connotes code, standard, recommended practice, or guide.
2. A representative includes an employee.
3. While these classifications will be used by the Standards Council to achieve a balance for Technical Committees, the Standards Council may determine that new classifications of members or unique interests need representation in order to foster the best possible committee deliberations on any project. In this connection, the Standards Council may make appointments as it deems appropriate in the public interest, such as the classification of "Utilities" in the National Electrical Code Committee.
4. Representatives of subsidiaries of any group are generally considered to have the same classification as the parent organization.

Copyright National Fire Protection Association
Provided by IHS under license with NFPA
No reproduction or networking permitted without license from IHS
Not for Resale

NFPA Technical Committee Document Proposal Form

NOTE: All Proposals must be received by 5:00 p.m. EST/EDST on the published Proposal Closing Date.

For further information on the standards-making process, please contact the Codes and Standards Administration at 617-984-7249.

For technical assistance, please call NFPA at 617-770-3000.

FOR OFFICE USE ONLY

Log #:

Date Rec'd:

Please indicate in which format you wish to receive your ROP/ROC ☐ **electronic** ☐ **paper** ☒ **download**
(Note: If choosing the download option, you must view the ROP/ROC from our website; no copy will be sent to you.)

Date April 1, 200X **Name** John J. Doe **Tel. No.** 716-555-1234

Company Air Canada Pilot's Association

Street Address 123 Summer Street Lane **City** Lewiston **State** NY **Zip** 14092

Please indicate organization represented (if any)

1. (a) NFPA Document Title National Fuel Gas Code **NFPA No. & Year** 54, 200X Edition

(**b) Section/Paragraph** 3.3

2. Proposal Recommends (check one): ☐ new text ☒ revised text ☐ deleted text

3. Proposal (include proposed new or revised wording, or identification of wording to be deleted): [Note: Proposed text should be in legislative format, i.e., use underscore to denote wording to be inserted (inserted wording) and strike-through to denote wording to be deleted (~~deleted wording~~).]

Revise definition of effective ground-fault current path to read:

3.3.78 Effective Ground-Fault Current Path. An intentionally constructed, permanent, low impedance electrically conductive path designed and intended to carry ~~underground~~ electric fault current ~~conditions~~ from the point of a ground fault on a wiring system to the electrical supply source.

4. Statement of Problem and Substantiation for Proposal: (Note: State the problem that would be resolved by your recommendation; give the specific reason for your Proposal, including copies of tests, research papers, fire experience, etc. If more than 200 words, it may be abstracted for publication.)

Change uses proper electrical terms.

5. Copyright Assignment

(a) ☐ **I am the author of the text or other material (such as illustrations, graphs) proposed in this Proposal.**

(b) ☒ **Some or all of the text or other material proposed in this Proposal was not authored by me. Its source is as follows** (please identify which material and provide complete information on its source)**:**

ABC Co.

I hereby grant and assign to NFPA all and full rights in copyright in this Proposal and understand that I acquire no rights in any publication of NFPA in which this Proposal in this or another similar or analogous form is used. Except to the extent that I do not have authority to make an assignment in materials that I have identified in (b) above, I hereby warrant that I am the author of this Proposal and that I have full power and authority to enter into this assignment.

Signature (Required)

PLEASE USE SEPARATE FORM FOR EACH PROPOSAL • NFPA Fax: (617) 770-3500
Mail to: Secretary, Standards Council, National Fire Protection Association, 1 Batterymarch Park, Quincy, MA 02169-7471

8/29/2006

SAMPLE

--`,,```,,,,````-`-`,,`,,`,`,,`---

Copyright National Fire Protection Association
Provided by IHS under license with NFPA
No reproduction or networking permitted without license from IHS

Not for Resale

NFPA Technical Committee Document Proposal Form

NOTE: All Proposals must be received by 5:00 p.m. EST/EDST on the published Proposal Closing Date.

For further information on the standards-making process, please contact the Codes and Standards Administration at 617-984-7249.

For technical assistance, please call NFPA at 617-770-3000.

FOR OFFICE USE ONLY

Log #: _____

Date Rec'd: _____

Please indicate in which format you wish to receive your ROP/ROC ☐ electronic ☐ paper ☐ download
(Note: If choosing the download option, you must view the ROP/ROC from our website; no copy will be sent to you.)

Date _____ **Name** _____ **Tel. No.** _____

Company _____

Street Address _____ **City** _____ **State** _____ **Zip** _____

Please indicate organization represented (if any) _____

1. (a) NFPA Document Title _____ **NFPA No. & Year** _____

(b) Section/Paragraph _____

2. Proposal Recommends (check one): ☐ new text ☐ revised text ☐ deleted text

3. Proposal (include proposed new or revised wording, or identification of wording to be deleted): [Note: Proposed text should be in legislative format, i.e., use underscore to denote wording to be inserted (inserted wording) and strike-through to denote wording to be deleted (~~deleted wording~~).]

4. Statement of Problem and Substantiation for Proposal: (Note: State the problem that would be resolved by your recommendation; give the specific reason for your Proposal, including copies of tests, research papers, fire experience, etc. If more than 200 words, it may be abstracted for publication.)

5. Copyright Assignment

(a) ☐ I am the author of the text or other material (such as illustrations, graphs) proposed in this Proposal.

(b) ☐ Some or all of the text or other material proposed in this Proposal was not authored by me. Its source is as follows (please identify which material and provide complete information on its source)**:**

_____

I hereby grant and assign to NFPA all and full rights in copyright in this Proposal and understand that I acquire no rights in any publication of NFPA in which this Proposal in this or another similar or analogous form is used. Except to the extent that I do not have authority to make an assignment in materials that I have identified in (b) above, I hereby warrant that I am the author of this Proposal and that I have full power and authority to enter into this assignment.

Signature (Required) _____

PLEASE USE SEPARATE FORM FOR EACH PROPOSAL • NFPA Fax: (617) 770-3500

Mail to: Secretary, Standards Council, National Fire Protection Association, 1 Batterymarch Park, Quincy, MA 02169-7471

8/29/2006

Copyright National Fire Protection Association
Provided by IHS under license with NFPA
No reproduction or networking permitted without license from IHS
Not for Resale