NFPA 13E

Recommended Practice for Fire Department Operations in Properties Protected by Sprinkler and Standpipe Systems

2005 Edition

NFPA, 1 Batterymarch Park, Quincy, MA 02169-7471
An International Codes and Standards Organization

Copyright National Fire Protection Association
Provided by IHS under license with NFPA
No reproduction or networking permitted without license from IHS

Not for Resale

IMPORTANT NOTICES AND DISCLAIMERS CONCERNING NFPA DOCUMENTS

NOTICE AND DISCLAIMER OF LIABILITY CONCERNING THE USE OF NFPA DOCUMENTS

NFPA codes, standards, recommended practices, and guides, of which the document contained herein is one, are developed through a consensus standards development process approved by the American National Standards Institute. This process brings together volunteers representing varied viewpoints and interests to achieve consensus on fire and other safety issues. While the NFPA administers the process and establishes rules to promote fairness in the development of consensus, it does not independently test, evaluate, or verify the accuracy of any information or the soundness of any judgments contained in its codes and standards.

The NFPA disclaims liability for any personal injury, property or other damages of any nature whatsoever, whether special, indirect, consequential or compensatory, directly or indirectly resulting from the publication, use of, or reliance on this document. The NFPA also makes no guaranty or warranty as to the accuracy or completeness of any information published herein.

In issuing and making this document available, the NFPA is not undertaking to render professional or other services for or on behalf of any person or entity. Nor is the NFPA undertaking to perform any duty owed by any person or entity to someone else. Anyone using this document should rely on his or her own independent judgment or, as appropriate, seek the advice of a competent professional in determining the exercise of reasonable care in any given circumstances.

The NFPA has no power, nor does it undertake, to police or enforce compliance with the contents of this document. Nor does the NFPA list, certify, test or inspect products, designs, or installations for compliance with this document. Any certification or other statement of compliance with the requirements of this document shall not be attributable to the NFPA and is solely the responsibility of the certifier or maker of the statement.

Copyright National Fire Protection Association
Provided by IHS under license with NFPA
No reproduction or networking permitted without license from IHS
Not for Resale

ADDITIONAL NOTICES AND DISCLAIMERS

Updating of NFPA Documents

Users of NFPA codes, standards, recommended practices, and guides should be aware that these documents may be superseded at any time by the issuance of new editions or may be amended from time to time through the issuance of Tentative Interim Amendments. An official NFPA document at any point in time consists of the current edition of the document together with any Tentative Interim Amendments and any Errata then in effect. In order to determine whether a given document is the current edition and whether it has been amended through the issuance of Tentative Interim Amendments or corrected through the issuance of Errata, consult appropriate NFPA publications such as the National Fire Codes® Subscription Service, visit the NFPA website at www.nfpa.org, or contact the NFPA at the address listed below.

Interpretations of NFPA Documents

A statement, written or oral, that is not processed in accordance with Section 6 of the Regulations Governing Committee Projects shall not be considered the official position of NFPA or any of its Committees and shall not be considered to be, nor be relied upon as, a Formal Interpretation.

Patents

The NFPA does not take any position with respect to the validity of any patent rights asserted in connection with any items which are mentioned in or are the subject of NFPA codes, standards, recommended practices, and guides, and the NFPA disclaims liability for the infringement of any patent resulting from the use of or reliance on these documents. Users of these documents are expressly advised that determination of the validity of any such patent rights, and the risk of infringement of such rights, is entirely their own responsibility.

NFPA adheres to applicable policies of the American National Standards Institute with respect to patents. For further information contact the NFPA at the address listed below.

Law and Regulations

Users of these documents should consult applicable federal, state, and local laws and regulations. NFPA does not, by the publication of its codes, standards, recommended practices, and guides, intend to urge action that is not in compliance with applicable laws, and these documents may not be construed as doing so.

Copyrights

This document is copyrighted by the NFPA. It is made available for a wide variety of both public and private uses. These include both use, by reference, in laws and regulations, and use in private self-regulation, standardization, and the promotion of safe practices and methods. By making this document available for use and adoption by public authorities and private users, the NFPA does not waive any rights in copyright to this document.

Use of NFPA documents for regulatory purposes should be accomplished through adoption by reference. The term "adoption by reference" means the citing of title, edition, and publishing information only. Any deletions, additions, and changes desired by the adopting authority should be noted separately in the adopting instrument. In order to assist NFPA in following the uses made of its documents, adopting authorities are requested to notify the NFPA (Attention: Secretary, Standards Council) in writing of such use. For technical assistance and questions concerning adoption of NFPA documents, contact NFPA at the address below.

For Further Information

All questions or other communications relating to NFPA codes, standards, recommended practices, and guides and all requests for information on NFPA procedures governing its codes and standards development process, including information on the procedures for requesting Formal Interpretations, for proposing Tentative Interim Amendments, and for proposing revisions to NFPA documents during regular revision cycles, should be sent to NFPA headquarters, addressed to the attention of the Secretary, Standards Council, NFPA, 1 Batterymarch Park, P.O. Box 9101, Quincy, MA 02269-9101.

For more information about NFPA, visit the NFPA website at www.nfpa.org.

--`,,,```-`-`,,`,,`,`,,`---

Copyright National Fire Protection Association
Provided by IHS under license with NFPA
No reproduction or networking permitted without license from IHS

Not for Resale

Copyright © 2005, National Fire Protection Association, All Rights Reserved

NFPA 13E

Recommended Practice for

Fire Department Operations in Properties Protected by Sprinkler and Standpipe Systems

2005 Edition

This edition of NFPA 13E, *Recommended Practice for Fire Department Operations in Properties Protected by Sprinkler and Standpipe Systems*, was prepared by the Technical Committee on Fire Service Training and acted on by NFPA at its November Association Technical Meeting held November 13–17, 2004, in Miami Beach, FL. It was issued by the Standards Council on January 14, 2005, with an effective date of February 7, 2005, and supersedes all previous editions.

This edition of NFPA 13E was approved as an American National Standard on February 7, 2005.

Origin and Development of NFPA 13E

In 1933, the NFPA adopted an informative brochure that was prepared by the Committee on Field Practice and entitled "Use of Automatic Sprinklers by Fire Departments." It was published as a separate pamphlet and reprinted in 1936. The work formerly carried on by the Committee on Field Practice was distributed to a number of new committees in 1953, and at that time the Committee on Standpipes and Outside Protection was given responsibility for the brochure. A subcommittee of the Committees on Standpipes and Outside Protection, Automatic Sprinklers, Fire Department Equipment, and Fire Service Training prepared a revision, "Fire Department Operations in Protected Properties," which, on recommendation of the four committees, was adopted as an informative report at the NFPA Annual Meeting in 1961. The informative report was published and circulated as a separate pamphlet, No. SPI-1961, but was not included in the annual volumes of the *National Fire Codes*®.

Recommended Practice for Fire Department Operations in Properties Protected by Sprinkler and Standpipe Systems, NFPA 13E, was adopted with minor revisions by the NFPA at its 1966 Annual Meeting on recommendation of the Committee on Standpipes and Outside Protection. It was amended and updated in 1973, 1978, 1983, 1989, 1995, and 2000. The changes made by the Technical Committee on Fire Service Training in the 2000 edition of this document aligned its text with changes made to NFPA 13, *Standard for the Installation of Sprinkler Systems*. In addition, several chapters presenting new pre-incident planning and fireground operational considerations for fire personnel were added.

In the revision process for the 2005 edition, the previous numbering of chapters and paragraphs has changed to reflect requirements in the 2004 edition of the *Manual of Style for NFPA Technical Committee Documents*.

--`,,,```-`-`,,`,,`,`,,`---

Copyright National Fire Protection Association
Provided by IHS under license with NFPA
No reproduction or networking permitted without license from IHS

Not for Resale

Technical Committee on Fire Service Training

William E. Peterson, *Chair*
Plano Fire Department, TX [E]
Rep. International Fire Marshals Association

Roger W. Bassett, R. W. Bassett & Associates, IL [SE]
Jonathan F. Bastian, E. D. Bullard Company, KY [M]
Theron J. Becker, City of Bolivar Fire Department, MO [U]
John M. Best, John Jay College of Criminal Justice, WV [U]
Donald T. Brady, Kidde Fire Trainers, Inc., NJ [M]
Gene P. Carlson, VFIS/Glatfelter Insurance Group, PA [I]
Rep. Volunteer Firemen's Insurance Services, Inc.
Jack L. Cottet, Utica National Insurance Company, NY [I]
William E. Glover, High Temperature Linings (HTL), VA [U]
David C. Grupp, Long Grove, IL [SE]
George F. Hall, U.S. Air Force, FL [U]
John W. Hoglund, Maryland Fire & Rescue Institute, MD [E]
Larry D. Hughes, North Carolina Department of Insurance, NC [E]
James G. Kellam, Jr., Virginia Beach Fire Department, VA [U]
Rep. International Society of Fire Service Instructors
Cortez Lawrence, U.S. Federal Emergency Management Agency, MD [SE]
Roger M. LeBoeuf, Elliott, LeBoeuf & Associates, VA [SE]
John B. Lockwood, Bowie, MD [SE]
Lavarn E. Lucas, Hilton Head Island Fire & Rescue, SC [E]
Francis Tim May, Fire Facilities, Inc., IL [M]
Denis M. Murphy, Nassau County Fire Service Academy, NY [U]
John Mike Myers, Las Vegas Fire Rescue, NV [E]
Thomas C. Quillin, Tallahassee Fire Department, FL [U]
Rodney D. Reid, Severns, Reid & Associates, Inc., IL [SE]
Kenneth W. Richards, Jr., Old Mystic Fire Department, CT [E]
Daniel N. Rossos, City of Portland Fire Bureau, OR [E]
Frederick M. Stowell, Fire Protection Publications, OK [M]
Rep. International Fire Service Training Association
Phil Welch, Gaston College, NC [U]
Samuel L. Wilkin, Broward County Fire Rescue, FL [SE]
Gary M. Young, City of Yuma Fire Department, AZ [E]

Alternates

Denis G. Onieal, U.S. Department of Homeland Security, MD [SE]
(Alt. to C. Lawrence)
Gary A. Simpson, E. D. Bullard Company, KY [M]
(Alt. to J. F. Bastian)
Michael A. Wieder, Fire Protection Publications, OK [M]
(Alt. to F. M. Stowell)
Steven J. Williamson, Kidde Fire Trainers, Inc., NJ [M]
(Alt. to D. T. Brady)

Nonvoting

Edward W. Bent, Sacramento, CA
(Member Emeritus)

David G. Trebisacci, NFPA Staff Liaison

This list represents the membership at the time the Committee was balloted on the final text of this edition. Since that time, changes in the membership may have occurred. A key to classifications is found at the back of the document.

NOTE: Membership on a committee shall not in and of itself constitute an endorsement of the Association or any document developed by the committee on which the member serves.

Committee Scope: This Committee shall have primary responsibility for all fire service training techniques, operations, and procedures to develop maximum efficiency and proper utilization of available personnel. Such activities can include training guides for fire prevention, fire suppression, and other missions for which the fire service has responsibility.

Copyright National Fire Protection Association
Provided by IHS under license with NFPA
No reproduction or networking permitted without license from IHS
Not for Resale

Contents

Chapter 1 Administration **13E–** 4
1.1 Scope **13E–** 4
1.2 Purpose **13E–** 4

Chapter 2 Referenced Publications **13E–** 4
2.1 General **13E–** 4
2.2 NFPA Publications **13E–** 4
2.3 Other Publications. (Reserved) **13E–** 4

Chapter 3 Definitions **13E–** 4
3.1 General **13E–** 4
3.2 NFPA Official Definitions **13E–** 4
3.3 General Definitions **13E–** 4

Chapter 4 Properties Protected by Automatic Sprinkler Systems **13E–** 5
4.1 General **13E–** 5
4.2 Inspection and Pre-Incident Planning **13E–** 5
4.3 Fireground Operations in Sprinklered Properties **13E–** 6
4.4 Post-Fire Operations **13E–** 7
4.5 Reports **13E–** 7
4.6 Ventilation in Storage Occupancies **13E–** 7

Chapter 5 Properties Protected by Exterior Sprinklers for Protection Against Exposure Fires **13E–** 8
5.1 General **13E–** 8
5.2 Pre-Incident Planning **13E–** 8
5.3 Water Supply for Fire Fighting **13E–** 8
5.4 Fireground Operations Involving Exterior Sprinklers **13E–** 8

Chapter 6 Properties Protected by Standpipe Systems **13E–** 8
6.1 Inspection and Pre-Incident Planning **13E–** 8
6.2 Water Supply for Fire Fighting **13E–** 9
6.3 Fireground Operations Involving Properties Protected by Standpipe Systems **13E–** 9

Chapter 7 Impairments **13E–** 9
7.1 Impairment Procedures **13E–** 9

Chapter 8 Reliability of Systems **13E–**10
8.1 System Status **13E–**10

Chapter 9 Buildings Under Construction **13E–**10
9.1 Site Visits **13E–**10

Chapter 10 Inspection and Testing Requirements **13E–**10
10.1 Inspection, Testing, and Maintenance for Sprinkler and Standpipe Systems **13E–**10

Annex A Explanatory Material **13E–**10

Annex B Recommendations for Fighting Rubber Tire Fires in Sprinklered Buildings **13E–**11

Annex C Informational References **13E–**12

Index **13E–**14

--`,,```-`-`,,`,,`,`,,`---

Copyright National Fire Protection Association
Provided by IHS under license with NFPA
No reproduction or networking permitted without license from IHS
Not for Resale

NFPA 13E

Recommended Practice for

Fire Department Operations in Properties Protected by Sprinkler and Standpipe Systems

2005 Edition

IMPORTANT NOTE: This NFPA document is made available for use subject to important notices and legal disclaimers. These notices and disclaimers appear in all publications containing this document and may be found under the heading "Important Notices and Disclaimers Concerning NFPA Documents." They can also be obtained on request from NFPA or viewed at www.nfpa.org/disclaimers.

NOTICE: An asterisk (*) following the number or letter designating a paragraph indicates that explanatory material on the paragraph can be found in Annex A.

A reference in brackets [ ] following a section or paragraph indicates material that has been extracted from another NFPA document. As an aid to the user, the complete title and edition of the source documents for extracts in the recommendations sections of this document are given in Chapter 2 and those for extracts in the informational sections are given in Annex C. Editorial changes to extracted material consist of revising references to an appropriate division in this document or the inclusion of the document number with the division number when the reference is to the original document. Requests for interpretations or revisions of extracted text should be sent to the technical committee responsible for the source document.

Information on referenced publications can be found in Chapter 2 and Annex C.

Chapter 1 Administration

1.1 Scope. This recommended practice provides basic procedures and information for use in fire department operations concerning properties equipped with certain fixed fire protection systems. The fixed systems covered in this recommended practice are interior automatic sprinkler systems, exterior sprinkler systems, and standpipe systems.

1.2 Purpose.

1.2.1 The purpose of this recommended practice is to assist fire departments in developing training programs and planning effective operations for supporting certain fixed fire protection systems in buildings in which fire can occur. Recommended practices are given for the adequate support and use of sprinkler and standpipe systems.

1.2.2 Nothing herein is intended to restrict any jurisdiction from exceeding these minimum suggestions.

Chapter 2 Referenced Publications

2.1 General. The documents or portions thereof listed in this chapter are referenced within this recommended practice and should be considered part of the recommendations of this document.

2.2 NFPA Publications. National Fire Protection Association, 1 Batterymarch Park, Quincy, MA 02169-7471.

NFPA 25, *Standard for the Inspection, Testing, and Maintenance of Water-Based Fire Protection Systems,* 2002 edition.

NFPA 241, *Standard for Safeguarding Construction, Alteration, and Demolition Operations,* 2004 edition.

2.3 Other Publications. (Reserved)

Chapter 3 Definitions

3.1 General. The definitions contained in this chapter apply to the terms used in this recommended practice. Where terms are not defined in this chapter or within another chapter, they should be defined using their ordinarily accepted meanings within the context in which they are used. *Merriam-Webster's Collegiate Dictionary,* 11th edition, is the source for the ordinarily accepted meaning.

3.2 NFPA Official Definitions.

3.2.1* Approved. Acceptable to the authority having jurisdiction.

3.2.2* Authority Having Jurisdiction (AHJ). An organization, office, or individual responsible for enforcing the requirements of a code or standard, or for approving equipment, materials, an installation, or a procedure.

3.2.3 Labeled. Equipment or materials to which has been attached a label, symbol, or other identifying mark of an organization that is acceptable to the authority having jurisdiction and concerned with product evaluation, that maintains periodic inspection of production of labeled equipment or materials, and by whose labeling the manufacturer indicates compliance with appropriate standards or performance in a specified manner.

3.2.4* Listed. Equipment, materials, or services included in a list published by an organization that is acceptable to the authority having jurisdiction and concerned with evaluation of products or services, that maintains periodic inspection of production of listed equipment or materials or periodic evaluation of services, and whose listing states that either the equipment, material, or service meets appropriate designated standards or has been tested and found suitable for a specified purpose.

3.2.5 Recommended Practice. A document that is similar in content and structure to a code or standard but that contains only nonmandatory provisions using the word "should" to indicate recommendations in the body of the text.

3.2.6 Should. Indicates a recommendation or that which is advised but not required.

3.3 General Definitions.

3.3.1 Standpipe. The vertical portion of the system piping that delivers the water supply for hose connections, and sprinklers on combined systems, vertically from floor to floor. The term *standpipe* can also refer to the horizontal portion of the system piping that delivers the water supply for two or more hose connections, and sprinklers on combined systems, on a single level. [**14,** 2003]

3.3.2 Yard Hydrant. A hydrant that is not designed to supply a fire department pumper.

Copyright National Fire Protection Association
Provided by IHS under license with NFPA
No reproduction or networking permitted without license from IHS
Not for Resale

Chapter 4 Properties Protected by Automatic Sprinkler Systems

4.1* General. Fire department administrations should use the record of effectiveness of automatic sprinkler systems and current data to promote these systems and should focus on actively supporting the operations of these systems.

4.1.1 Fire department personnel should be knowledgeable of and prepared to deal with the following three principal causes of unsatisfactory sprinkler performance:

(1) A closed valve in the water supply line
(2) The delivery of an inadequate water supply to the sprinkler system
(3) Occupancy changes that render the installed system unsuitable

4.1.2 The fire department should correct these situations by implementing effective departmental pre-incident planning, inspections, and other appropriate actions and by performing an appropriate maintenance and testing program on the installed system. The use of sprinkler systems initially designed for a low-heat-release product or intended only to accommodate low storage when a change has been made to a high-heat commodity, a significantly increased storage height, or new storage configurations can result in unsuccessful sprinkler performance, so the fire department or authority having jurisdiction should take steps to correct such problems.

4.1.3 Whenever automatic sprinklers are installed within the jurisdiction, the fire department training program should include a course on the fundamentals of automatic sprinkler systems. The fire department should recognize the following:

(1) When properly designed, installed, maintained, and supported by the fire department, a sprinkler system can apply water directly to the fire in a more effective manner than can the fire department using manual fire suppression methods.
(2) Not all sprinkler systems are equally effective in their performance. Systems might not have been properly maintained or might not be effective for the current occupancy.
(3) Changing conditions, including the following, might have reduced the required water supply calculated for sprinklers by the system designer:
    (a) Installation of a backflow preventor
    (b) Increased demand in area
    (c) Partially closed valves
    (d) Use of hose streams in larger volumes than anticipated
    (e) Deterioration of the grid system
(4) Changes in occupancies and commodity storage packaging and configuration methods might necessitate increased fire department support for the sprinkler system. Knowledge of sprinklered buildings within the response area will enable fire companies to be alert for the types of changes described in 4.1.3(3), which should be referred to the authority having jurisdiction so it can determine the need for sprinkler system modification.
(5) Sprinkler systems are installed in single-family and multiple-family dwellings as well as other types of residential occupancies. Some of these systems might not have the traditional fire department connection and other traditional exterior building fittings or dedicated separate water supplies.

4.2* Inspection and Pre-Incident Planning.

4.2.1 Fire personnel should thoroughly understand the following about properties protected by automatic sprinklers:

(1) The construction, contents, and layout of the buildings, the nature of the occupancies protected by automatic sprinklers, the extent of this protection, and the type of sprinkler systems
(2) The water supply to the sprinklers, including the source and type of supply, the flow and pressure normally available, and the anticipated duration of the available supply
(3) The location of all sprinkler control valves, the area controlled by each valve, and the consequence of shutting off each valve
(4) The location of fire department connections to sprinkler systems, the specific area each connection serves, and the water supply, hose, and pumper layout that will be used to feed the sprinkler connections *(See Figure 4.2.1.)*
(5) The location of water supplies for hand lines that can be used without jeopardizing the water supply to the operating sprinklers
(6) An alternative means for supplying water to the system in case of damage to the fire department connection
(7) The location of spare or replacement sprinkler heads
(8) The location of water flow indicators and annunciator panels associated with the systems
(9) Keyholder information for contact in case of emergency

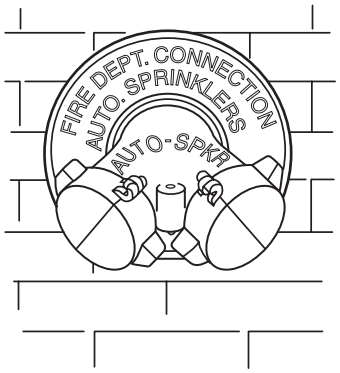

FIGURE 4.2.1 Fire Department Connection to Automatic Sprinkler Systems.

4.2.2 The company assigned primary responsibility for charging the sprinkler connection during pre-incident planning or annual inspections should hook up to the fire department connection to verify hose thread compatibility. The system should also be tested with air or water to verify integrity.

4.2.3 During periodic inspections, fire personnel should ascertain the location and accessibility of fire department connections and connections to the water source, as well as the availability of an adequate water supply.

4.2.4 Arrangements should be made with the property owners for entering the building as quickly as possible following activation of sprinkler systems when the building is unattended in order to avoid using forcible entry equipment and the resulting damage.

Copyright National Fire Protection Association
Provided by IHS under license with NFPA
No reproduction or networking permitted without license from IHS
Not for Resale

4.3 Fireground Operations in Sprinklered Properties.

4.3.1 Each fire department responding to properties protected by automatic sprinkler systems should implement standard operating procedures for handling fires in sprinklered buildings. The incident commander should ensure that these procedures are carried out as promptly and efficiently as possible. *(See Annex B.)*

4.3.2 Fire fighters operating in properties protected by automatic sprinkler systems should base operations on a thorough knowledge of the property gained from prior inspection and pre-incident planning.

4.3.3 A sprinkler system should not be shut down to improve visibility.

4.3.4* When arriving at a property protected by an automatic sprinkler system, fire companies should take prompt action to supply the system. *[See Figure 4.3.4(a) and Figure 4.3.4(b).]* A minimum of one sprinkler supply line should be connected to the fire department connection and should be supplemented according to fire conditions. The supply line should be pumped and the line charged to a pressure of 10.0 bar (150 psi), unless the system is posted for a different pressure. Additional hose lines should be stretched to the fire area as directed by the incident commander in charge. *[See Figure 4.3.4(c).]*

4.3.5 Where hose streams will be used, water should be taken from sources that do not reduce the sprinklered protection. Pumpers should be supplied by one of the following methods:

(1) Connecting pumpers to large mains from which flow tests have indicated adequate flows to supply both sprinklers and the required hose streams
(2) Connecting pumpers to water mains not needed for sprinkler supply
(3) Drafting pumpers from static sources

4.3.6 Immediately after all water supply connections have been completed and the fire department connection has been charged, the incident commander should verify that water is flowing into the sprinkler system. If water is not flowing, the incident commander should take action to verify that all accessible control valves are open. If a valve is found to be closed, the incident commander should be notified promptly and the valve should be opened fully unless it is tagged "Closed for Repairs." Valves found closed should be reported to the fire investigator after the incident. If the system is supplied or augmented by a fire pump, a fire fighter should also be assigned to verify that the pump is in operation.

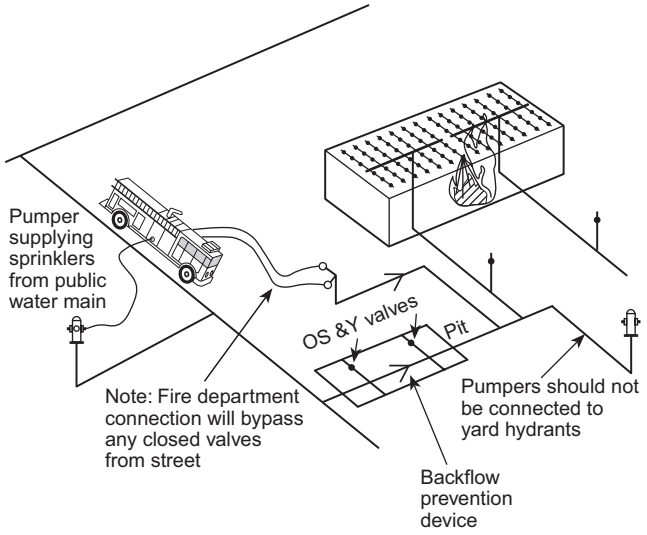

FIGURE 4.3.4(a) Public Water Supply to the Sprinkler System.

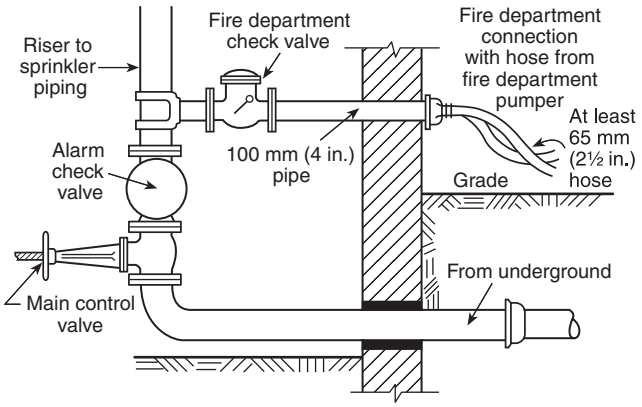

FIGURE 4.3.4(b) Water Supply to the Fire Department Connection.

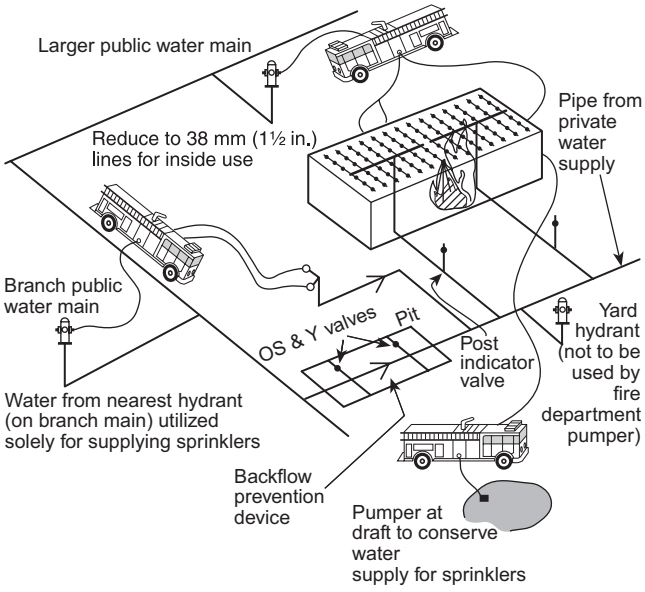

FIGURE 4.3.4(c) Pumper Supply Options That Should Be Considered.

4.3.7 When possible, fire departments should avoid drafting from open water sources into sprinkler systems and standpipe systems where such systems are connected to potable water supplies unless appropriate backflow protection equipment is installed.

4.3.8 Personnel performing ladder company functions should provide ventilation as needed to avoid delay in advancing hose lines to complete extinguishment. *(See Section 4.6 for other considerations regarding ventilation procedures.)*

--`,,,``-`-`,,`,,`,`,,`---
Copyright National Fire Protection Association
Provided by IHS under license with NFPA
No reproduction or networking permitted without license from IHS
Not for Resale

4.3.9 Salvage covers should be used to protect those items or areas likely to be affected by operating sprinklers, hose lines, or both. Special attention should be given to those areas on floor levels below the area of sprinkler operation.

4.3.10 Fire personnel should be aware that residential sprinkler piping is not tested to the same level as commercial sprinkler piping. Therefore, a residential sprinkler system should not be pressurized to more than water main pressure if this system has a fire department connection.

4.3.11 Appropriate plans for water removal should be undertaken.

4.4 Post-Fire Operations.

4.4.1 Automatic sprinklers should not be shut off until the fire has been extinguished. If there is a sectional or floor fire control valve, this valve should be closed in lieu of the main valve. A fire fighter with a means of communication should be assigned to remain at the valve until overhaul is completed. Orders should also be given to the pump operator to shut down the lines connected to the fire department connection, because these lines can bypass the main sprinkler valve and, in the absence of a floor valve, water will flow until the pump discharge gates are closed. Where a combined sprinkler–standpipe system is installed, the hose lines should be charged and maintained charged until fire overhaul is completed. Where only a few sprinkler heads are operating, sprinkler tongs, tapered wooden wedges, or dowels should be used to immediately stop the flow from the opened heads without shutting off the entire system. *(See Figure 4.4.1.)*

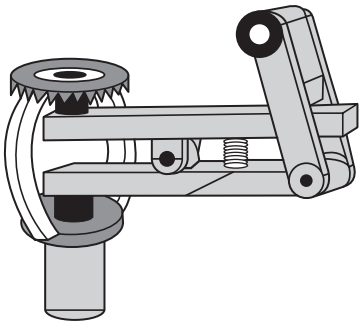

FIGURE 4.4.1 Sprinkler Head with Sprinkler Wedge Installed.

4.4.2 Routine overhaul should be provided and a cause and origin investigation should be initiated.

4.4.3 When the fire is extinguished and overhaul is completed, the lines from the pumper to the sprinkler system fire department connection should be ordered disconnected.

4.4.4 Where appropriate, the fire department should assist in restoring the sprinkler system. Because actions to restore a sprinkler system can present potential consequences for improper or negligent actions, each fire department should review its policy on this matter. Sprinkler heads that were exposed to high heat conditions during a fire should be examined by a qualified sprinkler installer and replaced as needed.

4.4.5 Code enforcement and fire prevention authorities should be notified of any event that involves activation of an automatic sprinkler system.

4.4.5.1 If the sprinkler system cannot be restored to operating condition by the time the fire department leaves the premises, the code enforcement and fire prevention authorities should be promptly notified of the structure's noncompliance status. The building owner or representative should also be notified.

4.5 Reports.

4.5.1 The officer in charge should include data regarding the operation of the sprinkler system in the incident report.

4.5.2 Past incident analysis of the fire department operations and the performance of the automatic sprinkler system should be reported to improve future operations at sprinklered properties. The following information should be gathered to use in the analysis process:

(1) Location of operating sprinkler heads
(2) Number of sprinkler heads operating
(3) Result of sprinkler operation
(4) Reason for any unsatisfactory operation
(5) Employee assigned to check control valve
(6) Whether the fire department connected to the sprinkler system and, if not, the reason
(7) Company and engine number that connected to the sprinkler system
(8) Number of hose lines used
(9) Size of hose lines used [Some departments now use large diameter hose (LDH) lines to supply fire department connections.]
(10) Whether water was pumped into the system; if so, for how long and at what pressure
(11) Whether the valve was closed after the fire, and which employee ordered that the valve be closed
(12) Number of sprinkler heads replaced by the fire department
(13) Type of heads installed
(14) Whether sprinkler protection was fully restored and by whom
(15) Actions taken to restore service
(16) Whether the private water supply to sprinklers operated satisfactorily
(17) Whether the fire prevention bureau was notified
(18) Whether the representative of management was notified as well as the names of the employee making notification and of those notified

4.6 Ventilation in Storage Occupancies.

4.6.1 Fire department personnel should study occupancies with a wide variety of configurations and a wide range of storage commodities to determine whether there is a need for special procedures, particularly where storage heights are in excess of 3.66 m (12 ft) because, in some cases, routine ventilation procedures in the early stages of a fire can hinder effective sprinkler operation. The fire department should discuss its pre-incident plan for these types of occupancies with the occupant, sprinkler designer, and insurance carrier to determine whether a modification in procedures is appropriate.

4.6.2* Where search and rescue operations have been completed prior to the fire department's performing ventilation work, the incident commander should allow the automatic sprinklers to continue to operate without further ventilation.

Copyright National Fire Protection Association
Provided by IHS under license with NFPA
No reproduction or networking permitted without license from IHS
Not for Resale

Chapter 5 Properties Protected by Exterior Sprinklers for Protection Against Exposure Fires

5.1 General.

5.1.1* Fire department personnel should be aware that many buildings or properties that have a severe exposure problem are equipped with exterior sprinkler systems designed to provide a water curtain capable of shielding the property from fires in other buildings or in storage areas.

5.1.2 Fire department training and operational protocols should be in place so that, when used properly, sprinkler heads for exterior protection (specially designed for a water curtain effect) and systems will prevent an exposure fire from entering the building.

5.2 Pre-Incident Planning. In properties having exterior sprinkler protection, fire personnel and officers assigned to the first-due companies should thoroughly understand the following:

(1) The construction and layout of the building, the nature of the occupancies protected by exterior sprinklers, the extent of this protection, and the type and operation (automatic or manual) of sprinkler systems
(2) The water supply to the sprinklers, including the source and type of supply, the flow and pressure normally available, and the anticipated duration of the available supply
(3) The location of all sprinkler control valves, the area controlled by each valve, and the consequence of shutting off each valve
(4) The location of fire department connections to sprinkler systems, the specific area each connection serves, and the water supply, hose, and pumper layout that will be used to feed the sprinkler connections
(5) The specific company assignment having the primary responsibility for charging the sprinkler connection
(6) The location of water supplies for hand lines that can be used without jeopardizing the water supply to the operating sprinklers
(7) An alternative means for supplying water to the system in case of damage to the fire department connection
(8) The location of spare or replacement sprinkler heads
(9) Keyholder information for contact in case of emergency

5.3 Water Supply for Fire Fighting.

5.3.1 A sketch should be prepared showing the location of the control valves, the fire department supply connections, and the hydrants to be used for pumping into the system. Where exposure fire is a problem, an assumption should be made that a major fire could happen that will also require a number of hose streams for manual fire fighting. An assumption should also be made that standard automatic sprinkler systems might be in the fire area that must be supplied with lines from pumpers as their water supplies.

5.3.2 When possible, fire departments should avoid drafting from open water sources into sprinkler systems and standpipe systems where such systems are connected to potable water supplies unless appropriate backflow protection equipment is installed.

5.4 Fireground Operations Involving Exterior Sprinklers.

5.4.1* The incident commander in charge should ensure that exterior systems are used to fulfill their intended purpose and should be aware of the existence of the system and the means of water supply.

5.4.2 The incident commander should determine as quickly as possible whether exterior sprinklers are operating. If the system is manually operated, a fire department member with a portable radio should immediately be sent to open the valve in case the exterior sprinklers are needed later. In some cases, several valves control different exposed parts of a protected building, so the correct valve must be opened. Care should be taken to conserve the water supply and minimize potential water damage by shutting off the exterior sprinklers when they are no longer required.

5.4.3 Where a fire department connection is provided, an engine company should pump into the connection.

5.4.4 The incident commander in charge should be responsible for the following:

(1) Ordering fire personnel into the exposed buildings to ascertain that all windows are closed and fire has not extended into the buildings concerned
(2) Setting up fire department lines in the exposed buildings if the exposure is severe; standpipe facilities can be used if available.
(3) Sending fire personnel to the roof to make certain that no part of the roof structure has ignited
(4) Ordering salvage operations in exposed buildings
(5) Ordering exterior sprinklers to be shut off and drained when no longer needed
(6) Ordering the system to be restored *(see 4.4.4)*

Chapter 6 Properties Protected by Standpipe Systems

6.1 Inspection and Pre-Incident Planning.

6.1.1 Personnel responsible for inspection and pre-incident planning should be aware that many properties have standpipe systems serving fire hose outlets in various parts of one or more buildings and that standpipe systems can be used by the fire personnel to place streams in service quickly in areas that cannot be reached conveniently with hose lines that are directly connected to pumpers or hydrants outside of buildings.

6.1.2 Standpipe hose threads should be checked for compatibility with fire department threads.

6.1.3* Fire personnel should determine the source and reliability of the water supply and follow the piping, while noting the location of control valves.

6.1.4 Where the fire department is required to supply hose outlets several hundred meters (feet) from the fire department connection, plans should be made in advance to provide the required pressure and fire flow based on the size of hose, the length of pipe, the maximum height of standpipe outlets, and the number of streams to be supplied.

6.1.5 Pre-incident planning should include identification of pressure-regulation devices installed within the system. For those standpipe systems with devices that regulate the pressure available to the hose lines attached to the system, fire personnel should be aware of the devices and their placement on standpipe systems and know how to adjust them so that they work properly with the hose lines and nozzles that can be attached to them. Pressure-regulation device settings should be compatible with the hose and nozzles used by the local fire department.

Copyright National Fire Protection Association
Provided by IHS under license with NFPA
No reproduction or networking permitted without license from IHS
Not for Resale

6.1.6 Pressure-regulation devices should be tested annually for proper operation.

6.2 Water Supply for Fire Fighting.

6.2.1* Fire personnel should be familiar with the variety of supply sources for water used in fire fighting, including standpipe systems with water supplied by public or private water mains, as well as fire pumps, gravity tanks, pressure tanks, fire department connections, or combinations of these, in order to provide water at adequate pressure and quantity at the outlets.

6.2.2 Fire personnel should determine the needed pressure and quantity of water at the highest outlets, and they should develop procedures to provide appropriate amounts of water for fire fighting when using the system.

6.2.3 Alternative means of supplying water to the fire area should be identified in case the system is unusable or needs to be supplemented at the time of a fire.

6.2.4 When possible, fire departments should avoid drafting from open water sources into sprinkler systems and standpipe systems where such systems are connected to potable water supplies unless appropriate backflow protection equipment is installed.

6.3 Fireground Operations Involving Properties Protected by Standpipe Systems.

6.3.1* Fire department personnel should carefully plan operations in properties protected by standpipe systems designed to supply fire department hose streams. These procedures should be similar to operations in buildings protected by automatic sprinklers.

6.3.2 Standpipes should be utilized when fires occur on floors above the reach of ground or aerial ladders and when valuable time will be lost in stretching lines up stairways. Careful pre-incident and on-scene fireground planning should be performed to ensure successful operations.

6.3.3 Where standpipe systems provide fire department connections, lines from a pumper supplied by a water main should be connected and charged to the pressure required to give the desired working pressure on the standpipe outlets being used. Where several independent standpipes are available for fire department use in the fire area, each standpipe should be charged. *(See Figure 6.3.3.)*

6.3.4* Fire Department Standpipe Connections and Pump Discharge Pressure.



FIGURE 6.3.3 Standpipe Connection.

6.3.4.1 When pumping to a fire department standpipe connection, the pump operator should consider the following factors in calculating pump discharge pressure:

(1) Friction loss in the hose line between the pump and the standpipe connection
(2) Friction loss in the standpipe system
(3) Pressure loss due to elevation of the nozzle(s)
(4) Number and size of attack lines operating from the standpipe
(5) Pressure desired at the nozzle(s)

6.3.4.2 Pump discharge pressure in excess of 14 bar (200 psi) should not be used unless the standpipe system has been designed to withstand higher pressures. Fire suppression personnel should be familiar with options and acceptable practices available to them in response to varying configurations and locations of standpipe outlets.

6.3.5 Hose or "house lines" attached to standpipe outlets should not be used except in the case of extreme emergency. Fire personnel should provide hose and nozzles of appropriate size and length along with proper accessory equipment for the anticipated fire conditions.

6.3.6 Limitations of communication devices, as well as the essential ability to maintain effective portable radio communications between the incident command post and officers on the upper floors, should be identified and resolved during pre-incident planning.

6.3.7 Where private water supplies serve the standpipe system, fire personnel should make certain that supply valves are open and private fire pumps, if any, are operating properly.

6.3.8 Before proceeding up stairs, fire personnel should ensure that all hose outlet valves on lower floors are closed.

Chapter 7 Impairments

7.1* Impairment Procedures. When a sprinkler system or wet-hose standpipe system is found to be impaired, fire department procedures should be followed as covered in Chapter 11 of NFPA 25, *Standard for the Inspection, Testing, and Maintenance of Water-Based Fire Protection Systems*. Each building owner should appoint an impairment coordinator for the purpose of authorizing planned impairments and dealing with emergency impairments.

7.1.1 When an impairment occurs, the following procedure should be performed by the impairment coordinator:

(1) Determine the extent and expected duration of the impairment
(2) Determine the increased risk in the areas of the building affected
(3) Submit recommendations to the owner or manager of the building for dealing with the risk
(4) Notify the fire department and the dispatch center for emergency services
(5) Notify the insurance carrier, the alarm company, the building owner or manager, and other involved authorities having jurisdiction
(6) Notify the supervisors in the area being affected
(7) Install an impairment tag on the affected control valve and fire department connection
(8) Assemble the necessary tools and materials to make the repair as quickly as possible

Copyright National Fire Protection Association
Provided by IHS under license with NFPA
No reproduction or networking permitted without license from IHS
Not for Resale

7.1.2 Once the impairment has been repaired and the system has been restored to service, the following steps should be taken:

(1) Conduct necessary inspections and tests to verify that the system is restored to operational condition
(2) Advise supervisors that the system has been restored
(3) Advise the fire department and dispatch center that protection has been restored
(4) Notify the insurance carrier, the building owner or manager, the alarm company, and any other authorities having jurisdiction or concerned parties that the system has been restored
(5) Remove the impairment tags

Chapter 8 Reliability of Systems

8.1 System Status. Fire department personnel should be thoroughly knowledgeable of the reliability of the system(s). If the condition of the system(s) is questionable, a change in preplans, procedures, or tactics should be required. A greater commitment of resources to the initial fire attack should be considered.

Chapter 9 Buildings Under Construction

9.1 Site Visits. Fire department personnel should provide continual pre-plan visits to high-rise buildings under construction to evaluate special needs in accordance with the provisions of Chapter 5 of NFPA 241, *Standard for Safeguarding Construction, Alteration, and Demolition Operations.*

Chapter 10 Inspection and Testing Requirements

10.1 Inspection, Testing, and Maintenance for Sprinkler and Standpipe Systems. Existing building systems should be evaluated by fire department or other appropriate building personnel in accordance with NFPA 25, *Standard for the Inspection, Testing, and Maintenance of Water-Based Fire Protection Systems.*

Annex A Explanatory Material

Annex A is not a part of the recommendations of this NFPA document but is included for informational purposes only. This annex contains explanatory material, numbered to correspond with the applicable text paragraphs.

A.3.2.1 Approved. The National Fire Protection Association does not approve, inspect, or certify any installations, procedures, equipment, or materials; nor does it approve or evaluate testing laboratories. In determining the acceptability of installations, procedures, equipment, or materials, the authority having jurisdiction may base acceptance on compliance with NFPA or other appropriate standards. In the absence of such standards, said authority may require evidence of proper installation, procedure, or use. The authority having jurisdiction may also refer to the listings or labeling practices of an organization that is concerned with product evaluations and is thus in a position to determine compliance with appropriate standards for the current production of listed items.

A.3.2.2 Authority Having Jurisdiction (AHJ). The phrase "authority having jurisdiction," or its acronym AHJ, is used in NFPA documents in a broad manner, since jurisdictions and approval agencies vary, as do their responsibilities. Where public safety is primary, the authority having jurisdiction may be a federal, state, local, or other regional department or individual such as a fire chief; fire marshal; chief of a fire prevention bureau, labor department, or health department; building official; electrical inspector; or others having statutory authority. For insurance purposes, an insurance inspection department, rating bureau, or other insurance company representative may be the authority having jurisdiction. In many circumstances, the property owner or his or her designated agent assumes the role of the authority having jurisdiction; at government installations, the commanding officer or departmental official may be the authority having jurisdiction.

A.3.2.4 Listed. The means for identifying listed equipment may vary for each organization concerned with product evaluation; some organizations do not recognize equipment as listed unless it is also labeled. The authority having jurisdiction should utilize the system employed by the listing organization to identify a listed product.

A.4.1 Records of the National Fire Protection Association and other fire protection associations around the world clearly indicate the highly effective performance of automatic sprinkler systems.

A.4.2 Figure A.4.2 shows a typical layout of water supply and sprinkler system features serving a building.

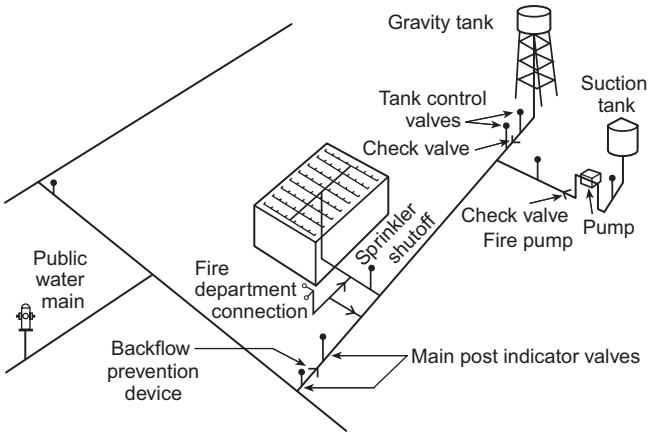

FIGURE A.4.2 A Typical Layout of a Water Supply System for Automatic Sprinkler Systems.

A.4.3.4 It might be necessary to alter the pressure of 10.0 bar (150 psi) to properly supply foam-water sprinkler systems, hydraulically calculated sprinkler systems, or high-rise systems. Performance of certain systems, such as foam-water sprinkler systems or hydraulically calculated sprinkler systems, can be adversely affected by increased pressures beyond the design limits of the system.

A.4.6.2 Continued operation enables the sprinklers to achieve full control of the fire, which, in some cases, can take 20 minutes or more.

Copyright National Fire Protection Association
Provided by IHS under license with NFPA
No reproduction or networking permitted without license from IHS
Not for Resale

A.5.1.1 These systems can be designed for automatic or manual operation. Others are thermostatically operated, open-head systems. Some are specially designed sprinkler heads on pipes extending from a wet- or dry-pipe sprinkler system inside the building and placed to protect window openings.

A.5.4.1 The purpose of exterior sprinkler systems is to prevent the extension of fires to exposed properties.

A.6.1.3 The procedure for fire department pre-incident planning for properties protected by standpipe systems is in many ways similar to that for automatic sprinkler systems.

A.6.2.1 Manual wet-pipe systems supplied only by fire department connections are also used.

A.6.3.1 Many buildings could have sprinkler systems, standpipe systems, or a combination of these systems.

A.6.3.4 Fire department standpipe outlets are required by NFPA 14, *Standard for the Installation of Standpipe and Hose Systems*, to be located in the stair towers, adjacent to the horizontal exits, and near entrances to exit access corridors. However, in some cases, the standpipe might be located on the exterior of the building, frequently adjacent to outside stairs or a fire escape. Accepted practice in standpipe operations is to connect the fire department hose to an outlet located at least one floor below the fire and to advance the line up the flight of stairs. The purpose of this practice is to prevent an intense fire on the fire floor from driving fire fighters away from the standpipe connection. Where additional lines are needed, connections can be made to lower outlets.

A.7.1 An impairment is generally defined as a shutdown of a system or portion thereof. The two types of impairments are emergency and planned. An emergency impairment results from an unexpected occurrence. A planned impairment is scheduled for the purposes of repair or revisions.

Annex B Recommendations for Fighting Rubber Tire Fires in Sprinklered Buildings

This annex is not a part of the recommendations of this NFPA document but is included for informational purposes only. This annex is extracted from NFPA 230, *Standard for the Fire Protection of Storage.*

B.1 Introduction. It is essential that the steps necessary for fighting rubber tire fires be understood by both the building occupant and the fire service to prevent unnecessary injury or loss of life and to prevent loss of fire control during overhaul. This activity necessitates emergency preplanning with the local fire department, building occupant, and others as deemed necessary.

Fire tests of rubber tire storage have indicated that smoke can quickly obstruct the visibility within a building and obscure the burning materials. Plans for the attack and extinguishment of the fire should be prepared in advance.

Because the products of combustion are harmful, all personnel assigned to interior functions should use breathing apparatus even before obscuration occurs.

Ventilation efforts should be carefully controlled. Drafts from open doors and windows allow fresh air to reach the fire and make control of the fire difficult. Doors and windows should be closed as soon as possible to limit the air supply to the fire and to allow control by automatic systems to be established.

Fire brigades should be trained and equipped with the necessary tools and equipment to respond to a fire emergency and, if possible, attack the fire prior to the arrival of the fire department.

Review of building and fire protection system plans should be part of the ongoing training of both the on-site personnel and fire departments.

A tire fire can progress quickly through the phases described in the following paragraphs, and each phase presents different conditions to responding emergency personnel. Items for consideration in the emergency preplanning program are provided for inclusion in such plans.

Observations at tire fire tests and accounts of actual fires have indicated that, while automatic sprinklers with adequate densities in approved configurations can control a fire, extinguishment by sprinklers alone normally does not occur. The four tests used also indicate that sprinkler protection can be overcome by the following:

(1) Storage exceeding the heights indicated in NFPA 230, *Standard for the Fire Protection of Storage*
(2) Storage configurations that inhibit the movement of heat to the roof, slowing sprinkler operation, and inhibit the waterflow to the seat of the fire, reducing sprinkler effectiveness

B.1.1 Incipient Stage. This stage occurs within 2 to 5 minutes of ignition.

Important: Drafts from open doors increase the intensity of the fire and make control difficult. Doors should be closed as quickly as possible to isolate the fire area.

Important: Fire tests indicate that smoke obscuration occurs within 6 to 9 minutes of ignition, even when the fire is sprinkler controlled. Breathing apparatus could be needed even before obscuration occurs.

If caught in the incipient stage, control can be achieved using interior hand hose and portable extinguishers. Quick reaction is essential, as this window of opportunity no longer exists within 2 to 5 minutes of actual ignition, since the generation of heat and smoke make the area untenable. Dry chemical extinguishers have been found to be most effective but should be backed up with small hose, as the knock-down is only temporary.

Tires in the affected area should be removed from storage. Tires removed from storage should be taken out of doors, thoroughly soaked, and left where they cannot expose other combustibles. The area where the fire occurred should be closely watched for several hours for rekindling.

While the first sprinkler can be expected to operate within the first 2 to 5 minutes of ignition, the updraft from the fire can disrupt the sprinkler pattern to such an extent that the water might not get to the seat of the fire. After the first 4 minutes, the fire has generally progressed beyond the stage where portable extinguishers are effective and, within minutes, the smoke and carbon monoxide make the area untenable. Vision is obscured, and any personnel without breathing apparatus is at risk.

B.1.2 Active Stage. The active stage of the fire follows the initial stage and is generally defined as that period where the sprinkler system is establishing control over the fire.

Important: Even though the fire is sprinkler controlled, roof temperatures resulting from the tire fires can reach temperatures high enough to cause steel joists to deflect and possibly fail. In recent fire tests, gas temperatures at roof level ranged between 593°C and 788°C (1110°F and 1450°F) for 10 minutes. Roof steel

--`,,`,,`-`-`,,`,,`,`,,`---
Copyright National Fire Protection Association
Provided by IHS under license with NFPA
No reproduction or networking permitted without license from IHS
Not for Resale

exposed to this high gas temperature could deflect or fail if subjected to additional loading. Do not place personnel on roof to attempt ventilation.

Important: Local fire departments attempting to draft from the sprinkler supply system will decrease the sprinkler effectiveness. If possible, separate municipal hydrants should be identified for fire department use.

Important: As the sprinklers gain control of the fire, the smoke will turn from black to gray. A return to black smoke is an indication that the sprinklers are not controlling the fire. Pump and system pressure also should be monitored. Loss of system pressure is an indication of more sprinklers operating, pump failure, or loss of control.

Responding local fire departments should be arriving by this time. Building personnel should advise arriving fire personnel of the location of all occupants of the building. At this point, there is little for the fire department to do except to connect to the municipal water supply and prepare to supplement the fire protection system through the fire department connection.

Fire department personnel or maintenance personnel, or both, should respond to the fire pump room and work to maintain operation of the fire pump. System discharge pressure should be observed to determine if the pressure is stable. Unstable or decreasing discharge pressure indicates changes in the operating conditions of the fire protection system.

During this stage, the building is untenable, and obscured vision makes the use of hose streams questionable. It should be noted that, in buildings with smoke vents, longer use of fire hose could be possible, but at some risk to personnel. It is best to allow the sprinklers to take control of the fire. Most of the sprinklers will begin to operate within 15 to 20 minutes of ignition, if sprinkler control is effected. Sprinklers should be allowed to operate at least 60 to 90 minutes to gain control. Successful fire tests indicate that waterflow stabilizes within the first 20 minutes of the fire.

The building is best left unventilated at this time. As control is gained, the smoke will change from black to gray and will diminish in intensity. During this period, at least six charged 38 mm (1½ in.) hose lines should be laid out preparatory to entering the building. Portable flood lights should be secured as well as turn-out gear, breathing apparatus, and forklifts for the overhaul crew.

B.1.3 Critical Stage. The critical stage occurs between the final extinguishment and the ventilation of the building.

Important: Ventilation should be done slowly, and the sprinklers should be left in operation. A return to black smoke is an indication that control is being lost. If this happens, ventilation should cease, the building should be closed, and the sprinkler system should be allowed to regain control. It should be understood that, during the attempt to ventilate the building, the fire intensity can increase due to the addition of outside air. Additional sprinklers can be expected to operate during the ventilation effort. If control has been gained, extra sprinklers might make no difference in overall performance. If control has not been gained or is marginal, this increase in the number of operating sprinklers could make regaining control more difficult due to the overall increase in sprinkler demand. Unless there is a system failure, the sprinklers should regain control. If there is any doubt that control of the fire has been gained, the sprinkler system should be allowed to soak the fire for longer than 90 minutes.

Important: The officer in charge should have a contingency plan if control is lost due to a system failure. In the event that control of the fire is lost, as evidenced by such indicators as increasing smoke generation, loss of pressure at the fire pump discharge (indicating massive sprinkler operation), or collapsing roof, efforts should be directed toward preventing the spread of the fire beyond the area bounded by the fire walls. At this point, consideration should be given to shutting off the sprinklers in the fire area to provide water for protecting the exposures.

After 60 to 90 minutes and when the smoke intensity has diminished, the building should be ventilated around the periphery of the fire area. If control has been gained, the roof temperature will usually have cooled sufficiently to allow roof vents to be opened manually if they have not already opened automatically.

B.1.4 Overhaul. Although visible fire is no longer present, overhaul of the area of the fire should be conducted to be certain of complete extinguishment.

Important: Care should be taken that the hose streams do not lower the pressure or water supply to the sprinkler system. Sprinkler operation should cease only when the fire chief is certain that hoses can control the fire.

Important: Caution should be used, since the tire piles will be unstable.

As soon as the smoke clears to the extent that the building can be entered, entry should be made using small hose streams that should be directed into the burning tires. Sprinklers should be kept in operation during this period.

Forklifts and other means should be used to remove the tires from the fire area to outside the building. It usually is necessary to keep the sprinklers in operation during this procedure at least until there is no evidence of flame. Patrols should be made of the affected area for at least 24 hours following the fire.

Following fire extinguishment, all fire protection systems should be restored to service as quickly as possible. These systems include but are not limited to the following:

(1) Sprinkler systems
(2) Alarm systems
(3) Pumps
(4) Water supplies

B.2 Use of High-Expansion Foam. If a high-expansion foam system is used in connection with automatic sprinklers, sprinklers can be shut off 1 hour after ignition, and foam can soak the fire for an additional hour before the building is opened and overhaul is begun. Limited tests with high-expansion foam indicate that fire extinguishment is largely complete after a period of soaking in foam. As a precautionary measure, charged hose streams should be available when foam is drained away.

After the initial fill, foam generators should be operated periodically during the soaking period to maintain the foam level. This procedure is necessary since sprinklers and products of combustion will cause partial foam breakdown.

Annex C Informational References

C.1 Referenced Publications. The following documents or portions thereof are referenced within this recommended practice for informational purposes only and are thus not part of the recommendations of this document unless also listed in Chapter 2.

Copyright National Fire Protection Association
Provided by IHS under license with NFPA
No reproduction or networking permitted without license from IHS
Not for Resale

C.1.1 NFPA Publications. National Fire Protection Association, 1 Batterymarch Park, Quincy, MA 02169-7471.

NFPA 14, *Standard for the Installation of Standpipe and Hose Systems*, 2003 edition.

NFPA 230, *Standard for the Fire Protection of Storage*, 2003 edition.

C.1.2 Other Publications. *Merriam-Webster's Collegiate Dictionary*, 11th edition, Merriam-Webster, Inc., Springfield, MA, 2003.

C.2 Informational References. (Reserved)

C.3 References for Extracts. The following documents are listed here to provide reference information, including title and edition, for extracts given in the informational sections of this recommended practice as indicated by a reference in brackets [ ] following a section or paragraph. These documents are not a part of the recommendations of this document unless also listed in Chapter 2 for other reasons.

NFPA 14, *Standard for the Installation of Standpipe and Hose Systems*, 2003 edition.

NFPA 230, *Standard for the Fire Protection of Storage*, 2003 edition.

--`,,,```-`-`,,`,,`,`,,`---
Copyright National Fire Protection Association
Provided by IHS under license with NFPA
No reproduction or networking permitted without license from IHS
Not for Resale

Index

© 2005 National Fire Protection Association. All Rights Reserved.

The copyright in this index is separate and distinct from the copyright in the document that it indexes. The licensing provisions set forth for the document are not applicable to this index. This index may not be reproduced in whole or in part by any means without the express written permission of NFPA.

-A-

Active stage, tire fires B.1.2
Annunciator panels ..... 4.2.1(8)
Approved (definition) 3.2.1, A.3.2.1
Authority having jurisdiction (definition) 3.2.2, A.3.2.2
Automatic sprinkler systems, properties protected by ..... Chap. 4
Effectiveness of systems 4.1, A.4.1
Fire department connections .....*see* Fire department connections
Fireground operations 4.3, A.4.3.4
Impairment procedures 7.1, A.7.1
Inspection 4.2, 4.3.2, 10.1, A.4.2
Pre-incident planning 4.2, 4.3.2, 4.6.1, A.4.2
Reports 4.5
Residential properties 4.3.10
Restoration of sprinklers .....*see* Restoration of sprinkler systems
Shutoff 4.4.1
Storage occupancies ..... 4.1.2, 4.1.3(4)
System status 8.1
Testing requirements 10.1
Tire fires, fighting ..... Annex B
Unsatisfactory performance of systems ..... 4.1.1, 4.1.2, 4.5.2(4)
Ventilation during sprinkler operation 4.3.8, 4.6, A.4.6.2
Visibility during fires, effect on 4.3.3
Water supply .....*see* Water supply

-B-

Buildings under construction ..... Chap. 9

-C-

Code, compliance with 4.4.5
Construction sites ..... Chap. 9
Contacts, emergency ..... 4.2.1(9), 5.2(9)
Critical stage, tire fires B.1.3

-D-

Definitions ..... Chap. 3

-E-

Emergency contacts ..... 4.2.1(9), 5.2(9)
Exposure fires, protection against .....*see* Exterior sprinklers, properties protected by
Exterior sprinklers, properties protected by ..... Chap. 5
Fireground operations 5.4, A.5.4.1
Manual sprinkler operation 5.4.2, A.5.1.1
Pre-incident planning 5.2
Water curtain shield 5.1.1, A.5.1.1
Water supply .....*see* Water supply
Extinguishers, portable fire, use in tire fires B.1.1

-F-

Fire brigades B.1
Fire department connections
Automatic sprinkler systems ..... 4.2.1(4), Fig. 4.2.1, 4.2.2, 4.2.3, Fig. 4.3.4(b), 4.3.4 to 4.3.6, 4.4.3, 5.2(4), A.4.3.4
Exterior sprinklers 5.3.1, 5.4.3
Impairment tags ..... 7.1.1(7)
Residential properties 4.3.10
Standpipe systems 6.1.2, 6.3.3, 6.3.4, A.6.3.4
Fireground operations
Automatic sprinklers 4.3, A.4.3.4
Exterior sprinklers 5.4, A.5.4.1
Standpipe systems 6.3, A.6.3.1, A.6.3.4
Fire prevention authorities ..... 4.4.5.1, 4.5.2(17)
Fire pumps
Private pumps, use with standpipe systems 6.3.7
Tire fire use ..... B.1.2 to B.1.4
Foam, tire fire use of high-expansion B.2
Foam-water sprinkler systems A.4.3.4

-H-

High-expansion foam, tire fire use B.2
High-rise sprinkler systems A.4.3.4
Hose lines
Hand hose, use in tire fires B.1.1
Sprinklered properties ..... 4.2.1(5), 4.3.4, 4.3.8, 4.3.9, 4.4.1, 4.5.2, A.4.3.4
Standpipe systems 6.1.1, 6.3.5
Hydrants 6.1.1, B.1.2
Exterior sprinklers 5.3.1
Yard (definition) 3.3.2
Hydraulically calculated sprinkler systems A.4.3.4

-I-

Impairments ..... Chap. 7
Impairment tags ..... 7.1.1(7)
Incipient stage, tire fires B.1.1
Inspections ..... Chap. 10
Sprinklered properties 4.2, 4.3.2, A.4.2
Standpipe systems, properties protected by 6.1, A.6.1.3

-L-

Labeled (definition) 3.2.3
Listed (definition) 3.2.4, A.3.2.4

-M-

Maintenance, sprinkler and standpipe systems 10.1

-O-

Outside sprinklers ...*see* Exterior sprinklers, properties protected by
Overhaul ..... 4.4.1 to 4.4.3
Tire fires B.1.4

-P-

Post-fire operations 4.3.11, 4.4
Pre-incident planning 8.1
Automatic sprinklered properties 4.2, 4.3.2, 4.6.1, A.4.2
Exterior sprinklers, properties protected by 5.2
Standpipe systems, properties protected by 6.1, 6.3.2, A.6.1.3
Storage occupancies 4.6.1
Tire storage B.1
Pressure
Standpipe system .....*see* Standpipe systems, properties protected by
Water supply .....*see* Water supply
Property owners ..... 4.2.1(9), 4.2.4, 4.4.5.1, 4.5.2(18), 5.2(9)

--`,,,```-`-`,,`,,`,`,,`---

Copyright National Fire Protection Association
Provided by IHS under license with NFPA
No reproduction or networking permitted without license from IHS

Not for Resale

Pumper water supply
Hose lines 6.1.1
Sprinkler systems ..... 4.2.1(4), Fig. 4.3.4(c), 4.3.5, 4.4.3
Standpipe systems 6.3.3, 6.3.4
Pumps, fire .....*see* Fire pumps
Purpose of standard 1.2

-R-

Radios, portable 5.4.2, 6.3.6
Recommended practice (definition) 3.2.5
References ..... Chap. 2, Annex C
Reliability of systems ..... Chap. 8
Reports 4.5
Residential occupancies ..... 4.1.3(5)
Residential sprinkler systems 4.3.10
Restoration of sprinkler systems ..... 4.4.4, 4.4.5.1, 4.5.2, 5.4.4(6), B.1.4

-S-

Salvage covers, use of 4.3.9
Salvage operations in exposed buildings ..... 5.4.4(4)
Scope of standard 1.1
Search and rescue operations 4.6.2, A.4.6.2
Should (definition) 3.2.6
Shutoff
Automatic sprinkler systems 4.4.1
Exterior sprinklers ..... 5.4.4(5)
Sprinkler heads, replacement ..... 4.2.1(7), 4.5.2(12), 5.2(8)
Sprinkler supply lines ..... 4.3.4 to 4.3.7, A.4.3.4
Sprinkler systems .....*see* Automatic sprinkler systems, properties protected by; Exterior sprinklers, properties protected by
Stair towers, fire department outlets in A.6.3.4
Standpipe (definition) 3.3.1
Standpipe systems, properties protected by ..... Chap. 6
Exposure fires, protection against ..... 5.4.4(2)
Fire department connections .....*see* Fire department connections
Fireground operations 6.3, A.6.3.1, A.6.3.4
Impairment procedures 7.1, A.7.1
Inspection 6.1, 10.1, A.6.1.3
Pre-incident planning 6.1, 6.3.2, A.6.1.3
Pressure, regulation of 6.1.5, 6.1.6, 6.3.3, 6.3.4, A.6.3.4
Stair towers, fire department outlets in A.6.3.4
System status 8.1
Testing requirements 10.1
Water supply .....*see* Water supply
Storage occupancies
Sprinkler systems in ..... 4.1.2, 4.1.3(4), 4.6, A.4.6.2
Tire fires ..... Annex B
Ventilation during fire 4.6, A.4.6.2, B.1, B.1.3

-T-

Testing requirements ..... Chap. 10
Tire fires in sprinklered buildings ..... Annex B
Training
Fire department 4.1.3, 5.1.2
Tire fires, fire brigade trained for B.1

-V-

Valves
Automatic sprinkler systems ..... 4.1.1(1), 4.1.3(3), 4.2.1(3), 4.3.6, 4.4.1, 4.5.2
Exterior sprinklers ..... 5.2(3), 5.3.1, 5.4.2
Impairment tags ..... 7.1.1(7)
Water supply 6.3.7, 6.3.8
Ventilation, fire 4.3.8, 4.6, A.4.6.2
Tire fires B.1, B.1.2, B.1.3
Visibility, effect of sprinkler system operation on 4.3.3

-W-

Water flow indicators ..... 4.2.1(8)
Water supply
Alternate ..... 4.2.1(6), 5.2(7), 6.2.3
Automatic sprinkler systems ..... 4.1.1, 4.1.3(5), 4.2.1(2), 4.2.1(5), 4.2.1(6), 4.2.3, 4.3.4 to 4.3.7, Fig. 4.3.4(a), A.4.3.4
Backflow protection equipment 4.3.7, 5.3.2, 6.2.4
Exterior sprinklers ..... 5.2(2), 5.2(6), 5.2(7), 5.3, 5.4.1, 5.4.2, A.5.4.1
Fire department connections .....*see* Fire department connections
Open water sources 4.3.7, 5.3.2, 6.2.4
Pressure 4.3.4, 4.3.10, A.4.3.4, B.1.2, B.1.3
Pumper .....*see* Pumper water supply
Standpipe systems 6.1.3, 6.1.4, 6.2, 6.3.3, A.6.1.3, A.6.2.1

-Y-

Yard hydrant (definition) ..... 3.3.2; *see also* Hydrants

Copyright National Fire Protection Association
Provided by IHS under license with NFPA
No reproduction or networking permitted without license from IHS
Not for Resale

Sequence of Events Leading to Publication of an NFPA Committee Document

Call goes out for proposals to amend existing document or for recommendations on new document.

▼

Committee meets to act on proposals, to develop its own proposals, and to prepare its report.

▼

Committee votes on proposals by letter ballot. If two-thirds approve, report goes forward. Lacking two-thirds approval, report returns to committee.

▼

Report — *Report on Proposals* (ROP) — is published for public review and comment.

▼

Committee meets to act on each public comment received.

▼

Committee votes on comments by letter ballot. If two-thirds approve, supplementary report goes forward. Lacking two-thirds approval, supplementary report returns to committee.

▼

Supplementary report — *Report on Comments* (ROC) — is published for public review.

▼

NFPA membership meets (Annual or Fall Meeting) and acts on committee report (ROP or ROC).

▼

Committee votes on any amendments to report approved at NFPA Annual or Fall Meeting.

▼

Appeals to Standards Council on Association action must be filed within 20 days of the NFPA Annual or Fall Meeting.

▼

Standards Council decides, based on all evidence, whether or not to issue standard or to take other action, including upholding any appeals.

Committee Membership Classifications

The following classifications apply to Technical Committee members and represent their principal interest in the activity of the committee.

M *Manufacturer:* A representative of a maker or marketer of a product, assembly, or system, or portion thereof, that is affected by the standard.

U *User:* A representative of an entity that is subject to the provisions of the standard or that voluntarily uses the standard.

I/M *Installer/Maintainer:* A representative of an entity that is in the business of installing or maintaining a product, assembly, or system affected by the standard.

L *Labor:* A labor representative or employee concerned with safety in the workplace.

R/T *Applied Research/Testing Laboratory:* A representative of an independent testing laboratory or independent applied research organization that promulgates and/or enforces standards.

E *Enforcing Authority:* A representative of an agency or an organization that promulgates and/or enforces standards.

I *Insurance:* A representative of an insurance company, broker, agent, bureau, or inspection agency.

C *Consumer:* A person who is, or represents, the ultimate purchaser of a product, system, or service affected by the standard, but who is not included in the *User* classification.

SE *Special Expert:* A person not representing any of the previous classifications, but who has a special expertise in the scope of the standard or portion thereof.

NOTES:

1. "Standard" connotes code, standard, recommended practice, or guide.
2. A representative includes an employee.
3. While these classifications will be used by the Standards Council to achieve a balance for Technical Committees, the Standards Council may determine that new classifications of members or unique interests need representation in order to foster the best possible committee deliberations on any project. In this connection, the Standards Council may make such appointments as it seems appropriate in the public interest, such as the classification of "Utilities" in the National Electrical Code Committee.
4. Representatives of subsidiaries of any group are generally considered to have the same classification as the parent organization.

Copyright National Fire Protection Association
Provided by IHS under license with NFPA
No reproduction or networking permitted without license from IHS
Not for Resale

NFPA Technical Committee Document Proposal Form

Note: All proposals must be received by 5:00 p.m. EST/EDST on the published proposal closing date.

For further information on the standards-making process, please contact Codes and Standards Administration at 617-984-7249. For technical assistance, please call NFPA at 617-770-3000.

FOR OFFICE USE ONLY
Log #: _____
Date Rec'd: _____

Please indicate in which format you wish to receive your ROP/ROC: ☐ **CD ROM** ☐ **paper** ☐ **download**
(Note: In choosing the download option you intend to view the ROP/ROC from our Website. No copy will be sent to you.)

Date 12/18/02 **Name** John B. Smith **Telephone** 617-555-1212
Company _____
Address 9 Seattle St. **City** Seattle **State** WA **Zip** 02255
Please indicate organization represented (if any) Fire Marshals Assn. of North America

1. **a) NFPA Document Title** National Fire Alarm Code
   b) NFPA No. & Edition NFPA 72, 2002 ed. **c) Section/Paragraph** 4.4.7.1.1
2. **Proposal Recommends:** *(check one)* ☐ **new text** ☐ **revised text** ☒ **deleted text**
3. **Proposal.** *(Include proposed new or revised wording, or identification of wording to be deleted.)* Note: Proposed text should be in legislative format, that is, use underscore to denote wording to be inserted (inserted wording) and strike-through to denote wording to be deleted (~~deleted wording~~). Delete exception.
4. **Statement of Problem and Substantiation for Proposal.** Note: State the problem that will be resolved by your recommendation. Give the specific reason for your proposal including copies of tests, research papers, fire experience, etc. If more than 200 words, it may be abstracted for publication. A properly installed and maintained system should be free of ground faults. The occurrence of one or more ground faults should be required to cause a "trouble" signal because it indicates a condition that could contribute to future malfunction of the system. Ground fault protection has been widely available on these systems for years and its cost is negligible. Requiring it on all systems will promote better installations, maintenance and reliability.
5. ☒ **This Proposal is Original Material.** Note: Original material is considered to be the submitter's own idea based on or as a result of his/her own experience, thought, or research and, to the best of his/her knowledge, is not copied from another source.

   ☐ **This Proposal is Not Original Material; Its Source** ***(if known)*** **is as Follows:** _____

Sample

I hereby grant the NFPA all and full rights in copyright to this proposal, and I understand that I acquire no rights in any publication of NFPA in which this proposal in this or another similar or analogous form is used.

Signature ***(Required)*** John B. Smith

PLEASE USE SEPARATE FORM FOR EACH PROPOSAL • NFPA FAX (617) 770-3500

Mail to: Secretary, Standards Council • NFPA • 1 Batterymarch Park • PO Box 9101 • Quincy, MA 02269-9101

--`,,`,,`-`-`,,`,,`,`,,`---

Copyright National Fire Protection Association
Provided by IHS under license with NFPA
No reproduction or networking permitted without license from IHS

Not for Resale

NFPA Technical Committee Document Proposal Form

Note: All proposals must be received by 5:00 p.m. EST/EDST on the published proposal closing date.

For further information on the standards-making process, please contact Codes and Standards Administration at 617-984-7249. For technical assistance, please call NFPA at 617-770-3000.

FOR OFFICE USE ONLY
Log #: _____
Date Rec'd: _____

Please indicate in which format you wish to receive your ROP/ROC: ☐ **CD ROM** ☐ **paper** ☐ **download**
(Note: In choosing the download option you intend to view the ROP/ROC from our Website. No copy will be sent to you.)

Date _____ **Name** _____ **Telephone** _____
Company _____
Address _____ **City** _____ **State** _____ **Zip** _____
Please indicate organization represented (if any) _____

1. **a) NFPA Document Title** _____
   b) NFPA No. & Edition _____ **c) Section/Paragraph** _____

2. **Proposal Recommends:** *(check one)* ☐ **new text** ☐ **revised text** ☐ **deleted text**

3. **Proposal.** *(Include proposed new or revised wording, or identification of wording to be deleted.)* Note: Proposed text should be in legislative format, that is, use underscore to denote wording to be inserted (inserted wording) and strike-through to denote wording to be deleted (~~deleted wording~~). _____

4. **Statement of Problem and Substantiation for Proposal.** Note: State the problem that will be resolved by your recommendation. Give the specific reason for your proposal including copies of tests, research papers, fire experience, etc. If more than 200 words, it may be abstracted for publication. _____

5. ☐ **This Proposal is Original Material.** Note: Original material is considered to be the submitter's own idea based on or as a result of his/her own experience, thought, or research and, to the best of his/her knowledge, is not copied from another source.

   ☐ **This Proposal is Not Original Material; Its Source *(if known)* is as Follows:** _____

I hereby grant the NFPA all and full rights in copyright to this proposal, and I understand that I acquire no rights in any publication of NFPA in which this proposal in this or another similar or analogous form is used.

Signature *(Required)* _____

PLEASE USE SEPARATE FORM FOR EACH PROPOSAL • NFPA FAX (617) 770-3500

Mail to: Secretary, Standards Council • NFPA • 1 Batterymarch Park • PO Box 9101 • Quincy, MA 02269-9101

Copyright National Fire Protection Association
Provided by IHS under license with NFPA
No reproduction or networking permitted without license from IHS
Not for Resale