NFPA® 1194

Standard for Recreational Vehicle Parks and Campgrounds

2008 Edition

NFPA, 1 Batterymarch Park, Quincy, MA 02169-7471
An International Codes and Standards Organization

Copyright National Fire Protection Association
Provided by IHS under license with NFPA
No reproduction or networking permitted without license from IHS

Not for Resale

IMPORTANT NOTICES AND DISCLAIMERS CONCERNING NFPA DOCUMENTS

NOTICE AND DISCLAIMER OF LIABILITY CONCERNING THE USE OF NFPA DOCUMENTS

NFPA codes, standards, recommended practices, and guides, of which the document contained herein is one, are developed through a consensus standards development process approved by the American National Standards Institute. This process brings together volunteers representing varied viewpoints and interests to achieve consensus on fire and other safety issues. While the NFPA administers the process and establishes rules to promote fairness in the development of consensus, it does not independently test, evaluate, or verify the accuracy of any information or the soundness of any judgments contained in its codes and standards.

The NFPA disclaims liability for any personal injury, property or other damages of any nature whatsoever, whether special, indirect, consequential or compensatory, directly or indirectly resulting from the publication, use of, or reliance on this document. The NFPA also makes no guaranty or warranty as to the accuracy or completeness of any information published herein.

In issuing and making this document available, the NFPA is not undertaking to render professional or other services for or on behalf of any person or entity. Nor is the NFPA undertaking to perform any duty owed by any person or entity to someone else. Anyone using this document should rely on his or her own independent judgment or, as appropriate, seek the advice of a competent professional in determining the exercise of reasonable care in any given circumstances.

The NFPA has no power, nor does it undertake, to police or enforce compliance with the contents of this document. Nor does the NFPA list, certify, test or inspect products, designs, or installations for compliance with this document. Any certification or other statement of compliance with the requirements of this document shall not be attributable to the NFPA and is solely the responsibility of the certifier or maker of the statement.

Copyright National Fire Protection Association
Provided by IHS under license with NFPA
No reproduction or networking permitted without license from IHS
Not for Resale

ADDITIONAL NOTICES AND DISCLAIMERS

Updating of NFPA Documents

Users of NFPA codes, standards, recommended practices, and guides should be aware that these documents may be superseded at any time by the issuance of new editions or may be amended from time to time through the issuance of Tentative Interim Amendments. An official NFPA document at any point in time consists of the current edition of the document together with any Tentative Interim Amendments and any Errata then in effect. In order to determine whether a given document is the current edition and whether it has been amended through the issuance of Tentative Interim Amendments or corrected through the issuance of Errata, consult appropriate NFPA publications such as the National Fire Codes® Subscription Service, visit the NFPA website at www.nfpa.org, or contact the NFPA at the address listed below.

Interpretations of NFPA Documents

A statement, written or oral, that is not processed in accordance with Section 6 of the Regulations Governing Committee Projects shall not be considered the official position of NFPA or any of its Committees and shall not be considered to be, nor be relied upon as, a Formal Interpretation.

Patents

The NFPA does not take any position with respect to the validity of any patent rights asserted in connection with any items which are mentioned in or are the subject of NFPA codes, standards, recommended practices, and guides, and the NFPA disclaims liability for the infringement of any patent resulting from the use of or reliance on these documents. Users of these documents are expressly advised that determination of the validity of any such patent rights, and the risk of infringement of such rights, is entirely their own responsibility.

NFPA adheres to applicable policies of the American National Standards Institute with respect to patents. For further information contact the NFPA at the address listed below.

Law and Regulations

Users of these documents should consult applicable federal, state, and local laws and regulations. NFPA does not, by the publication of its codes, standards, recommended practices, and guides, intend to urge action that is not in compliance with applicable laws, and these documents may not be construed as doing so.

Copyrights

This document is copyrighted by the NFPA. It is made available for a wide variety of both public and private uses. These include both use, by reference, in laws and regulations, and use in private self-regulation, standardization, and the promotion of safe practices and methods. By making this document available for use and adoption by public authorities and private users, the NFPA does not waive any rights in copyright to this document.

Use of NFPA documents for regulatory purposes should be accomplished through adoption by reference. The term "adoption by reference" means the citing of title, edition, and publishing information only. Any deletions, additions, and changes desired by the adopting authority should be noted separately in the adopting instrument. In order to assist NFPA in following the uses made of its documents, adopting authorities are requested to notify the NFPA (Attention: Secretary, Standards Council) in writing of such use. For technical assistance and questions concerning adoption of NFPA documents, contact NFPA at the address below.

For Further Information

All questions or other communications relating to NFPA codes, standards, recommended practices, and guides and all requests for information on NFPA procedures governing its codes and standards development process, including information on the procedures for requesting Formal Interpretations, for proposing Tentative Interim Amendments, and for proposing revisions to NFPA documents during regular revision cycles, should be sent to NFPA headquarters, addressed to the attention of the Secretary, Standards Council, NFPA, 1 Batterymarch Park, P.O. Box 9101, Quincy, MA 02269-9101.

For more information about NFPA, visit the NFPA website at www.nfpa.org.

--`,,```,,,,````-`-`,,`,,`,`,,`---

Copyright National Fire Protection Association
Provided by IHS under license with NFPA
No reproduction or networking permitted without license from IHS

Not for Resale

Copyright © 2008 National Fire Protection Association®. All Rights Reserved.

NFPA® 1194

Standard for

Recreational Vehicle Parks and Campgrounds

2008 Edition

This edition of NFPA 1194, *Standard for Recreational Vehicle Parks and Campgrounds*, was prepared by the Technical Committee on Recreational Vehicles. It was issued by the Standards Council on December 11, 2007, with an effective date of December 31, 2007, and supersedes all previous editions.

This edition of NFPA 1194 was approved as an American National Standard on December 31, 2007.

Origin and Development of NFPA 1194

The earliest activity of NFPA in the development of standards for recreational vehicle parks was initiated in 1937, and the first NFPA standard was officially adopted in 1940. This standard was entitled *Standard for Trailer Coaches and Trailer Coach Camps.* A revision of the 1940 standard was adopted by NFPA in 1952 (post–World War II), entitled NFPA 501, *Standards for Fire Prevention and Fire Protection in Trailer Coaches and Trailer Coach Courts.* In 1960, NFPA acted to approve a revised version that divided the earlier text into two parts — one designated NFPA 501A and adopted that year under the title *Standard for Fire Protection in Trailer Courts,* and the other designated NFPA 501B and adopted in 1971 under the title *Standard for Fire Prevention and Fire Protection in Mobile Homes and Travel Trailers.* NFPA 501B was further amended in 1963. In 1964, a revision of NFPA 501A was approved as the NFPA *Standard for Fire Protection in Trailer Courts.*

During the years 1962–1964, arrangements were made to consolidate the separate standards activities of the Mobile Homes Manufacturers Association and the Trailer Coach Association, which had produced standards under the American Standards Association (now ANSI) known as *American Standard Installations of Plumbing, Heating and Electrical Systems in Travel Trailers* (A119.2-1963) and a similar *Standard on Mobile Homes* (A119.1-1963). These interorganizational arrangements were completed in 1964, and in 1969 the newly formed Recreational Vehicle Institute was added as a fourth cosponsor.

The first standard covering any aspect of recreational vehicle parks completed by the present ANSI-sponsored committee was the *Electrical Standard for Recreational Vehicle Parks* (NFPA 501D-1971; ANSI A177.2-1972, subsequently redesignated as ANSI A119.4-1972). This edition was prepared and published to update the previous material covering electrical safety in the 1964 edition of NFPA 501A, *Standard for Fire Prevention and Fire Protection in Trailer Courts.* In the 1971 edition of NFPA 70, *National Electrical Code®*, electrical requirements for trailer courts first appeared, based largely on NFPA 501D-1971. Since it obviously was necessary to maintain coordination between this standard and NFPA 70, the sponsoring committees established liaison procedures so that Chapter 6 of the 1977 edition and the content of Part B of Article 551 of NFPA 70 were identical in intent.

Companion NFPA documents to this standard, besides NFPA 70, are NFPA 1192, *Standard on Recreational Vehicles,* and NFPA 501A, *Standard for Fire Safety Criteria for Manufactured Home Installations, Sites, and Communities.*

Sponsorship for the 1977 edition of the standard was held jointly by the National Fire Protection Association and the Recreational Vehicle Industry Association. The standard was developed by the Sectional Committee on Recreational Vehicle Parks and Campgrounds, which operated under the Correlating Committee on Mobile Homes and Recreational Vehicles. The 1977 edition included substantive revisions to the previous edition in Chapter 6 (Electrical Systems). The 1982 edition of the *Standard for Fire Safety Criteria for Recreational Vehicle Parks and Campgrounds* superseded the 1977 edition. The 1982 edition was produced by the newly formed Committee on Fire Safety for Recreational Vehicles (June 20, 1979), which was responsible for developing a standard for fire safety for recreational vehicles and recreational vehicle parks. Therefore, the 1982 edition

NFPA and National Fire Protection Association are registered trademarks of the National Fire Protection Association, Quincy, Massachusetts, 02169.

Copyright National Fire Protection Association
Provided by IHS under license with NFPA
No reproduction or networking permitted without license from IHS
Not for Resale

excluded all sections of the previous editions not considered within the committee scope. Notably excluded were sections dealing with environmental health and sanitation. Also excluded were requirements for park electrical systems, which are addressed by reference to NFPA 70. Modifications also were made in sections dealing with definitions and fire safety and to conform to the *Manual of Style for NFPA Technical Committee Documents*.

The 1986 edition included very minor reference changes and revised definitions. The 1990 edition contained a completely revised chapter on fire safety requirements, Chapter 3, so that non–fire safety items could be moved to other chapters handled by the ANSI A119 Committee. The standard was reconfirmed in 1993, and some sections that were considered operational concerns were deleted from Chapter 3 in the 1996 edition.

In the 1999 edition, NFPA 501D was renumbered as NFPA 1194. The duplicate requirement for a refuse disposal system was deleted from Chapter 3.

Only minor technical changes were made in the 2002 edition. However, the document was completely reorganized and editorially revised to comply with the requirements of the *Manual of Style for NFPA Technical Committee Documents*.

Prior to the 2005 edition, the requirements for environmental health and sanitation were developed by the ANSI A119 Accredited Standards Committee, of which the Recreation Vehicle Industry Association was Secretariat. The requirements for fire safety were added, published, and distributed under one cover as ANSI A119.4/NFPA 1194 by ANSI, NFPA, and RVIA.

Through an agreement with RVIA, responsibility for development of the standard was transferred to NFPA; therefore the requirements for the design and construction features for recreational vehicle parks and campgrounds that are appropriate to provide adequate environmental health and sanitation, safety of electrical distribution systems, safety of LP-Gas storage and dispensing, and fire protection were combined into one standard — NFPA 1194.

The 2005 edition of NFPA 1194 was also subjected to editorial revisions in accordance with the *Manual of Style for NFPA Technical Committee Documents*. Technical changes to the standard included revisions of requirements to address the larger scale of recreational vehicles and to provide specific requirements for wildland/urban interface areas.

The 2008 edition of NFPA 1194 provides new requirements for dead-end roads in excess of 100 ft in length. Associated annex material has been added to depict a range of dead-end situations. New requirements were also added to address propane containers.

Copyright National Fire Protection Association
Provided by IHS under license with NFPA
No reproduction or networking permitted without license from IHS
Not for Resale

Technical Committee on Recreational Vehicles

John P. Harvey, *Chair*
State of Washington, WA [E]

Bruce A. Hopkins, *Secretary*
Recreation Vehicle Industry Association, VA [M]

Thomas R. Arnold, T. R. Arnold & Associates, Inc., IN [RT]
Charles Ballard, Pacific West Associates, Inc., WY [SE]
Christopher J. Bloom, CJB Fire Consultants, OR [SE]
Larry Budica, Fleetwood Enterprises, Inc., CA [M]
Jeff D. Colwell, Exponent, Inc., AZ [SE]
James W. Finch, Kampgrounds of America, Inc., MT [U]
Dean Foster, Thetford Corporation, MI [M]
Jerome A. Hoover, Monaco Coach Corporation, IN [M]
Dale Jordal, Winnebago Industries, Inc., IA [M]
Bob Livingston, Affinity Group, Inc., CA [IM]
Mark Luttich, Nebraska Public Service Commission, NE [E]
Samuel E. McTier, McTier Supply Company, IL [IM]
Tug L. Miller, National Association of RV Parks & Campgrounds, CA [U]
Rep. National Assn. of RV Parks & Campgrounds
Arthur H. Mittelstaedt, Jr., Recreation Safety Institute Ltd., NY [SE]
Rep. American Alliance for Health, Physical Education, Recreation, & Dance
Robert Ohlund, Thor California, CA [M]
Homer A. Staves, Staves Consulting Inc., MT [U]
Bruce J. Swiecicki, National Propane Gas Association, IL [IM]
Larry J. Thatcher, Manchester Tank & Equipment, ID [M]

Alternates

Joseph M. Bloom, Bloom Fire Investigation, OR [SE]
(Alt. to C. J. Bloom)
Theodore P. Huff, T. R. Arnold & Associates, Inc., IN [RT]
(Alt. to T. R. Arnold)
David M. Mihalick, Thor Industries, OH [M]
(Alt. to R. Ohlund)
Kent Perkins, Recreation Vehicle Industry Association, VA [M]
(Alt. to B. A. Hopkins)
John Stuewe, State of Washington, WA [E]
(Alt. to J. P. Harvey)
Leslie Woodward, Fairview Fittings & Manufacturing Inc., NY [IM]
(Alt. to S. E. McTier)
Robert E. Wozniak, Fleetwood Enterprises, Inc., CA [M]
(Alt. to L. Budica)

James D. Lake, NFPA Staff Liaison

This list represents the membership at the time the Committee was balloted on the final text of this edition. Since that time, changes in the membership may have occurred. A key to classifications is found at the back of the document.

NOTE: Membership on a committee shall not in and of itself constitute an endorsement of the Association or any document developed by the committee on which the member serves.

Committee Scope: This Committee shall have primary responsibility for documents on the fire safety criteria for recreational vehicles and recreational vehicle parks.

Copyright National Fire Protection Association
Provided by IHS under license with NFPA
No reproduction or networking permitted without license from IHS
Not for Resale

Contents

Chapter 1 Administration **1194–** 5
1.1 Scope **1194–** 5
1.2 Purpose **1194–** 5
1.3 Application **1194–** 5
1.4 Retroactivity **1194–** 5
1.5 Equivalency **1194–** 5
1.6 Units **1194–** 5

Chapter 2 Referenced Publications **1194–** 5
2.1 General **1194–** 5
2.2 NFPA Publications **1194–** 5
2.3 Other Publications **1194–** 6
2.4 References for Extracts in Mandatory Sections **1194–** 6

Chapter 3 Definitions **1194–** 6
3.1 General **1194–** 6
3.2 NFPA Official Definitions **1194–** 6
3.3 General Definitions **1194–** 6

Chapter 4 General Requirements **1194–** 7
4.1 Differing Standards **1194–** 7
4.2 U.S. Federal Regulations **1194–** 7
4.3 Electrical Requirements **1194–** 7
4.4 Wildland/Urban Interface Areas **1194–** 7
4.5 Recreational Park Trailers **1194–** 7

Chapter 5 General Design Criteria for Recreational Vehicle Parks and Campgrounds **1194–** 7
5.1 Park Design and Construction **1194–** 7
5.2 Recreational Vehicle Site **1194–** 8
5.3 Recreational Park Trailer Site **1194–** 8
5.4 Camping Unit Site **1194–** 9

Chapter 6 Fire Safety **1194–** 9
6.1 Fire Detection and Alarm Services **1194–** 9
6.2 Fire Safety Rules and Regulations for Recreational Vehicle Parks and Campgrounds — Posting of Emergency Information **1194–** 9
6.3 Propane Containers. **1194–** 9

Chapter 7 Environmental Health and Sanitation . **1194–** 9
7.1 General **1194–** 9
7.2 Potable Water Supply and Distribution ... **1194–** 9
7.3 Potable Water Connections at Individual Sites **1194–**10
7.4 Drinking Fountains **1194–**10
7.5 Sanitary Conveniences **1194–**10
7.6 Number, Location, and Arrangement of Toilets, Urinals, and Lavatories **1194–**10
7.7 Showers **1194–**11
7.8 Sewerage Facilities **1194–**11
7.9 Sanitary Disposal Stations **1194–**12
7.10 Potable Water Supply Stations **1194–**12
7.11 Refuse Disposal **1194–**12

Annex A Explanatory Material **1194–**12

Annex B Typical Recreational Vehicle Park or Campground Site Plans **1194–**13

Annex C Glossary **1194–**17

Annex D Informational References **1194–**20

Index **1194–**21

--`,,```,,,,````-`-`,,`,,`,`,,`---

Copyright National Fire Protection Association
Provided by IHS under license with NFPA
No reproduction or networking permitted without license from IHS
Not for Resale

NFPA 1194

Standard for

Recreational Vehicle Parks and Campgrounds

2008 Edition

IMPORTANT NOTE: This NFPA document is made available for use subject to important notices and legal disclaimers. These notices and disclaimers appear in all publications containing this document and may be found under the heading "Important Notices and Disclaimers Concerning NFPA Documents." They can also be obtained on request from NFPA or viewed at www.nfpa.org/disclaimers.

NOTICE: An asterisk (*) following the number or letter designating a paragraph indicates that explanatory material on the paragraph can be found in Annex A.

Changes other than editorial are indicated by a vertical rule beside the paragraph, table, or figure in which the change occurred. These rules are included as an aid to the user in identifying changes from the previous edition. Where one or more complete paragraphs have been deleted, the deletion is indicated by a bullet (•) between the paragraphs that remain.

A reference in brackets [ ] following a section or paragraph indicates material that has been extracted from another NFPA document. As an aid to the user, the complete title and edition of the source documents for extracts in mandatory sections of the document are given in Chapter 2 and those for extracts in informational sections are given in Annex D. Editorial changes to extracted material consist of revising references to an appropriate division in this document or the inclusion of the document number with the division number when the reference is to the original document. Requests for interpretations or revisions of extracted text shall be sent to the technical committee responsible for the source document.

Information on referenced publications can be found in Chapter 2 and Annex D.

Chapter 1 Administration

1.1 Scope.

1.1.1 This standard shall provide minimum construction requirements for safety and health for occupants using facilities supplied by recreational vehicle parks and campgrounds offering temporary living sites for use by recreational vehicles, recreational park trailers, and other camping units.

1.1.2* This standard shall not cover the design of recreational vehicles, recreational park trailers, or other forms of camping units.

1.1.3 This standard shall not cover operational and maintenance practices for recreational vehicle parks and campgrounds.

1.2* Purpose. The purpose of this standard shall be to serve as a basis for regulations by authorities having jurisdiction over the facilities provided in new recreational vehicle parks and campgrounds and additions to existing facilities only.

1.3 Application.

1.3.1 The requirements of this standard shall be applied to all new recreational vehicle parks and campgrounds and additions to existing facilities only.

1.3.2 This standard shall not be applied as a stand-alone design specification or instruction manual.

1.4 Retroactivity.

1.4.1 The provisions of this standard reflect a consensus of what is necessary to provide an acceptable degree of protection from the hazards addressed in this standard at the time the standard was issued.

1.4.2 Unless otherwise specified, the provisions of this standard shall not apply to facilities, equipment, structures, or installations that existed or were approved for construction or installation prior to the effective date of the standard.

1.4.3 Where specified, the provisions of this standard shall be retroactive. In those cases where the authority having jurisdiction determines that the existing situation presents an unacceptable degree of risk, the authority having jurisdiction shall be permitted to apply retroactively any portions of this standard deemed appropriate.

1.4.4 The retroactive requirements of this standard shall be permitted to be modified if their application clearly would be impractical in the judgment of the authority having jurisdiction, and only where it is clearly evident that a reasonable degree of safety is provided.

1.5 Equivalency. Nothing in this standard is intended to prevent the use of systems, methods, or devices of equivalent or superior quality, strength, fire resistance, effectiveness, durability, and safety over those prescribed by this standard.

1.5.1 Technical documentation shall be submitted to the authority having jurisdiction to demonstrate equivalency.

1.5.2 The system, method, or device shall be approved for the intended purpose by the authority having jurisdiction.

1.6 Units. The primary units throughout this standard shall be the International System of Units (SI).

Chapter 2 Referenced Publications

2.1 General. The documents or portions thereof listed in this chapter are referenced within this standard and shall be considered part of the requirements of this document.

2.2 NFPA Publications. National Fire Protection Association, 1 Batterymarch Park, Quincy, MA 02169-7471.

NFPA 1, *Uniform Fire Code™*, 2006 edition.

NFPA 10, *Standard for Portable Fire Extinguishers*, 2007 edition.

NFPA 58, *Liquefied Petroleum Gas Code*, 2008 edition.

NFPA 70™, National Electrical Code®, 2008 edition.

NFPA 72®, National Fire Alarm Code®, 2007 edition.

NFPA 1141, *Standard for Fire Protection Infrastructure for Land Development in Suburban and Rural Areas*, 2008 edition.

NFPA 1142, *Standard on Water Supplies for Suburban and Rural Fire Fighting*, 2007 edition.

NFPA 1144, *Standard for Reducing Structure Ignition Hazards from Wildland Fire*, 2008 edition.

NFPA 1192, *Standard on Recreational Vehicles*, 2008 edition.

2.3 Other Publications.

2.3.1 ANSI Publications. American National Standards Institute, Inc., 25 West 43rd Street, 4th floor, New York, NY 10036.

ANSI A119.5, *Standard for Recreational Park Trailers*, 1998.

Copyright National Fire Protection Association
Provided by IHS under license with NFPA
No reproduction or networking permitted without license from IHS
Not for Resale

ANSI/ARI 1010, *Standard for Drinking Fountains and Self-Contained, Mechanically Refrigerated Drinking Water Coolers*, 1994.

2.3.2 U.S. Government Publications. U.S. Government Printing Office, Washington, DC 20402.

Safe Drinking Water Act, Public Law 93–523, 42 U.S.C. 201.

40 CFR 141, National Primary Drinking Water Regulations.

2.3.3 Other Publications.

Merriam-Webster's Collegiate Dictionary, 11th edition, Merriam-Webster, Inc., Springfield, MA, 2003.

2.4 References for Extracts in Mandatory Sections.

NFPA 1, *Uniform Fire Code™*, 2006 edition.
NFPA 1192, *Standard on Recreational Vehicles*, 2008 edition.

Chapter 3 Definitions

3.1 General. The definitions contained in this chapter shall apply to the terms used in this standard. Where terms are not defined in this chapter or within another chapter, they shall be defined using their ordinarily accepted meanings within the context in which they are used. *Merriam-Webster's Collegiate Dictionary*, 11th edition, shall be the source for the ordinarily accepted meaning.

3.2 NFPA Official Definitions.

3.2.1* Approved. Acceptable to the authority having jurisdiction.

3.2.2* Authority Having Jurisdiction (AHJ). An organization, office, or individual responsible for enforcing the requirements of a code or standard, or for approving equipment, materials, an installation, or a procedure.

3.2.3 Labeled. Equipment or materials to which has been attached a label, symbol, or other identifying mark of an organization that is acceptable to the authority having jurisdiction and concerned with product evaluation, that maintains periodic inspection of production of labeled equipment or materials, and by whose labeling the manufacturer indicates compliance with appropriate standards or performance in a specified manner.

3.2.4* Listed. Equipment, materials, or services included in a list published by an organization that is acceptable to the authority having jurisdiction and concerned with evaluation of products or services, that maintains periodic inspection of production of listed equipment or materials or periodic evaluation of services, and whose listing states that either the equipment, material, or service meets appropriate designated standards or has been tested and found suitable for a specified purpose.

3.2.5 Shall. Indicates a mandatory requirement.

3.2.6 Should. Indicates a recommendation or that which is advised but not required.

3.3 General Definitions.

3.3.1 Accessory Structure. Buildings that house offices, employee or operator living units, recreational facilities, grocery stores, convenience stores, gift shops, services, restrooms, dumping stations, showers, laundry facilities, storage units, and other support services customarily a part of a recreational vehicle park or campground operation.

3.3.2 Campground. Any parcel or tract of land under the control of any person, organization, or governmental entity wherein two or more recreational vehicle, recreational park trailer, and/or other camping unit sites are offered for use by the public or members of an organization for overnight stays.

3.3.2.1 ***Campground Types.***

3.3.2.1.1 ***Developed Campground.*** A campground with two or more recreational vehicle or recreational park trailer unit sites accessible by vehicular traffic, where sites are substantially developed and refuse disposal systems, flush toilets, bathing facilities, and water are provided.

3.3.2.1.2* ***Primitive Campground.*** A campground that is not accessible to vehicles and no facilities are provided for the comfort or convenience of the campers.

3.3.2.1.3 ***Semi-Developed Campground.*** A campground with two or more recreational vehicle or recreational park trailer unit sites, accessible by vehicular traffic. Roads and facilities (toilets and/or privies) are provided.

3.3.2.1.4* ***Semi-Primitive Campground.*** A campground accessible only by walk-in, equestrian, or motorized trail vehicles where rudimentary facilities (privies and/or fireplaces) may be provided for the comfort and convenience of the campers

3.3.3* Camping Unit. A portable structure, shelter, or vehicle designed and intended for occupancy by persons engaged in RVing or camping.

3.3.4 Camping Trailer. A vehicular unit that is mounted on wheels and constructed with collapsible partial side walls that fold for towing by another vehicle and unfold at the campsite to provide temporary living quarters for recreational, camping, or travel use. *(See also 3.3.19, Recreational Vehicle.)*

3.3.5 Camping Unit Site. A specific area within a recreational vehicle park or campground that is set aside for use by a camping unit.

3.3.6 Camping Unit Stand. A specific area within a recreational vehicle park or campground set aside for use by a camping unit.

3.3.7 Density. The number of camping unit sites on a unit of land area.

3.3.8 Fifth Wheel Trailer. A vehicular unit, mounted on wheels, designed to provide temporary living quarters for recreational, camping, or travel use, of such size or weight as not to require special highway movement permit(s), of gross trailer area not to exceed 400 ft^2 (37.2 m^2) in the setup mode, and designed to be towed by a motorized vehicle that contains a towing mechanism that is mounted above or forward of the tow vehicle's rear axle. *(See also 3.3.19, Recreational Vehicle.)* [**1192,** 2008]

3.3.9* Gross Trailer Area. The total plan area measured to the maximum horizontal projection of exterior walls in the setup mode.

3.3.10 Motor Home. A vehicular unit designed to provide temporary living quarters for recreational, camping, or travel use, built on or permanently attached to a self-propelled motor vehicle chassis or on a chassis cab or van that is an integral part of the completed vehicle. [**1192,** 2008] *(See also 3.3.19, Recreational Vehicle.)*

3.3.11 Offset (Sewer Lines). A combination of elbows or bends in a line of piping that brings one section of the pipe out of line but into a line parallel with the other section.

--`,,```,,,,````-`-`,,`,,`,`,,`---

Copyright National Fire Protection Association
Provided by IHS under license with NFPA
No reproduction or networking permitted without license from IHS
Not for Resale

3.3.12 Propane. Any material having a vapor pressure not exceeding that allowed from commercial propane composed predominantly of the following hydrocarbons, either by themselves or as mixtures: propane, propylene, butane (normal butane or iso-butane), and butylene. [**1192,** 2008]

3.3.13 Public Water Supply. A municipally or privately owned and approved community water supply system designed to distribute water to consumers within a defined geographical area.

3.3.14 Rear of Site. A line designating the rearmost part of the stand that is perpendicular to the longitudinal centerline of the stand.

3.3.15 Recreational Park Trailer. A trailer-type unit that is primarily designed to provide temporary living quarters for recreational camping or seasonal use.

3.3.16 Recreational Park Trailer Site. See 3.3.5, Camping Unit Site.

3.3.17 Recreational Park Trailer Stand. See 3.3.6, Camping Unit Stand.

3.3.18 Recreational Unit Site. See 3.3.5, Camping Unit Site.

3.3.19 Recreational Vehicle. A vehicular-type unit primarily designed to provide temporary living quarters for recreational, camping, travel, or seasonal use that either has its own motive power or is mounted on or towed by another vehicle.

3.3.20* Recreational Vehicle Park. See 3.3.2, Campground.

3.3.21 Recreational Vehicle Site. See 3.3.5, Camping Unit Site.

3.3.22 Recreational Vehicle Stand. See 3.3.6, Camping Unit Stand.

3.3.23 Sanitary Disposal Station. A facility provided for emptying of the waste-holding tanks.

3.3.24* Service Structure. A structure or portion thereof that is used to house sanitary facilities, such as water closets or lavatories.

3.3.25 Sewage. Any liquid waste containing animal or vegetable matter in suspension or solution, or the water-carried wastes resulting from the discharge of water closets, laundry tubs, washing machines, sinks, dishwashers, or any other source of water-carried waste of human origin or containing putrescible material.

3.3.26 Sewer Branch. For recreational vehicle parks and campgrounds, that portion of a sewer system that receives the discharge from more than one sewer lateral.

3.3.27 Sewer Lateral. That portion of a sewer system that serves a single site or structure.

3.3.28 Sewer Main. That portion of a sewer system that receives the discharge from all sewer laterals or branches within the recreational vehicle park or campground.

3.3.29 Stand. See 3.3.6, Camping Unit Stand.

3.3.30 Travel Trailer. A vehicular unit, mounted on wheels, designed to provide temporary living quarters for recreational, camping, or travel use, of such size or weight as not to require special highway movement permits when towed by a motorized vehicle, and a gross trailer area less than 320 ft^2 (29.7 m^2). [**1192,** 2008] *(See also 3.3.19, Recreational Vehicle.)*

3.3.31 Truck Camper. A portable unit constructed to provide temporary living quarters for recreational, travel, or camping use, consisting of a roof, floor, and sides, and is designed to be loaded onto and unloaded from the bed of a pickup truck. [**1192,** 2008] *(See also 3.3.19, Recreational Vehicle.)*

3.3.32 Utility Connection Assembly. A single hookup assembly located on the site and containing connections for any of the following: potable water, sewer inlets, electrical power, phone, or television.

3.3.33 Water Riser Pipe. That portion of the water system serving the recreational vehicle, recreational park trailer, and/or other camping unit site that extends from the water supply main through a lateral branch and terminates at a water connection.

3.3.34 Water Supply Station. A facility for supplying potable water.

Chapter 4 General Requirements

4.1 Differing Standards. Wherever nationally recognized standards and this standard differ, the requirements of this standard shall apply.

4.2 U.S. Federal Regulations. Where federal regulations under the National Highway Traffic Safety Administration supersede all or part of this standard as applied to any category of regulated motor vehicles, the federal regulations shall apply.

4.3 Electrical Requirements. All electrical installations, systems, and equipment shall comply with Article 551, Part VI, and other applicable sections of NFPA 70.

4.4 Wildland/Urban Interface Areas. Where campgrounds and RV parks are located in wildland/urban interface areas as determined by the authority having jurisdiction, the installations shall comply with NFPA 1141 and NFPA 1144 as applicable.

4.5 Recreational Park Trailers. Recreational park trailers shall meet the following criteria:

(1) Be built on a single chassis mounted on wheels
(2) Have a gross trailer area not exceeding 400 ft^2 (37.2 m^2) in the setup mode
(3) Be certified by the manufacturer as complying with ANSI A119.5

Chapter 5 General Design Criteria for Recreational Vehicle Parks and Campgrounds

5.1 Park Design and Construction.

5.1.1 Site Plans for Recreational Vehicle Parks and Developed Campgrounds.

5.1.1.1 The location and arrangement of each recreational vehicle park and campground shall meet the approval of the chief of the fire department, forest ranger, warden, or other authority responsible for providing the necessary fire protection services.

5.1.1.2 A site plan shall be supplied to the fire and law enforcement agencies having jurisdiction.

5.1.1.3 This site plan shall show and identify camping unit sites, each stand, major structures and facilities, and water supply for fire protection purposes in the recreational vehicle park or campground, to facilitate response by emergency services such as fire, police, and ambulance.

Copyright National Fire Protection Association
Provided by IHS under license with NFPA
No reproduction or networking permitted without license from IHS
Not for Resale

5.1.1.4 Means of access for emergency responders shall consist of roadways, fire lanes, parking lot lanes, vacant camping unit stands, or a combination thereof, and shall be provided to all structures.

5.1.1.4.1* Multiple Access Roads. More than one fire department access road shall be provided when it is determined by the AHJ that access by a single road could be impaired by vehicle congestion, condition of terrain, climatic conditions, or other factors that could limit access. [**1:**18.2.3.3]

5.1.1.5 Roads shall be designed and constructed to allow evacuation simultaneously with emergency response operations.

5.1.1.6 Bridges.

5.1.1.6.1 When a bridge is required to be used as part of a fire department access road, it shall be constructed and maintained in accordance with nationally recognized standards. [**1:**18.2.3.4.5.1]

5.1.1.6.2 The bridge shall be designed for a live load sufficient to carry the imposed loads of fire apparatus. [**1:**18.2.3.4.5.2]

5.1.1.6.3 Vehicle load limits shall be posted at both entrances to bridges where required by the AHJ. [**1:**18.2.3.4.5.3]

5.1.2 Roads. Minimum widths of recreational vehicle park and campground roads designed to accommodate all types and sizes of camping units shall be 10 ft (3.0 m) per traffic lane and 8 ft (2.4 m) per parallel parking lane.

5.1.2.1 Roads leading to accessory structures shall be designed and constructed to accommodate the load and turning radius of the largest apparatus typically used to respond to that location.

5.1.2.2 Roads leading to accessory structures shall be not less than 20 ft (6.1 m) of unobstructed width with a 13.5 ft (4.1 m) vertical clearance.

5.1.2.3 Road curves designed for use by all types and sizes of camping units shall have a minimum internal radius of 30 ft (9.1 m).

5.1.2.4* Turnarounds shall be provided for all dead-end roads over 100 ft (30.5 m) in length, and those designed for use by all types and sizes of camping units shall have a minimum internal radius of 30 ft (9.1 m).

5.1.2.5* Dead Ends. Dead-end roads in excess of 100 ft (30.5 m) in length shall be provided with approved provisions for the turning around of fire apparatus no greater than every 500 ft (152.4 m) and at the closed end.

5.1.2.6 Turning Radius. The turning radius of a road shall be as approved by the authority having jurisdiction. [**1:**18.2.3.4.3.1]

5.1.3 Structures. Every structure in a recreational vehicle park or campground that does not meet the definition of a camping unit shall be designed and constructed in accordance with applicable building codes.

5.1.4 Swimming and Bathing Facilities. If provided, such facilities shall be designed in accordance with the requirements of the authority having jurisdiction.

5.1.5 Camping Unit Site Size. The occupied area of a camping unit site shall not exceed 75 percent of the site area.

5.1.6 Separation. A stand or structure shall be located at least 10 ft (3.0 m) from any other stand or structure.

5.1.6.1 A structure shall be permitted to be closer than 10 ft (3.0 m) to its stand if it is part of the stand or serves the recreational vehicle, recreational park trailer, or camping unit using that stand, providing a minimum of 10 ft (3.0 m) is maintained to any other stand or structure.

5.1.6.2 Tents are exempted from 5.1.6.

5.1.7 Site Identification. Each camping unit site shall be marked for identification. Such markers shall be easily readable from the recreational park or campground street.

5.1.8* Stand. Each camping unit stand shall be designed and constructed at such elevation, distance, and angle with respect to its access to provide for safe and efficient placement and removal of camping units.

5.1.8.1 Each stand shall be constructed to minimize the development of ruts or low spots by vehicle tires.

5.1.8.2 Each stand shall be graded to provide drainage.

5.1.8.3 Each stand shall be a minimum of 8 ft (2.4 m) wide.

5.1.9 Gates.

5.1.9.1 The gate opening shall swing inward and shall provide a clear opening no less than 2 ft (0.61 m) wider than the gated road or driveway.

5.1.9.2 Emergency responders shall have ready access to locking mechanisms on any gate that restricts access.

5.2 Recreational Vehicle Site.

5.2.1 Recreation Vehicle Stand Construction. Each recreational vehicle site shall have a vehicular access.

5.2.2 Grouped Utility Connection Assembly.

5.2.2.1 When a potable water supply connection, sewer inlet connection, electrical power, TV connection, and phone connection supply or discharge outlets are provided for an individual recreational vehicle stand, they shall be permitted to be grouped together in one assembly in accordance with 5.2.2.2 through 5.2.2.4.

5.2.2.2 The water and electrical assemblies shall be located on the left rear half of the site (left side of the recreational vehicle) between 4 ft and 6 ft (1.2 m and 1.8 m) of the stand.

5.2.2.3 The sewer assembly shall be located on the left rear half of the site (left side of the recreational vehicle) within 4 ft (1.2 m) of the stand.

5.2.2.4 The water, electrical, and sewer assemblies shall be listed specifically for the purpose of providing services to individual recreational vehicles. *[See Figure B.1(a) through Figure B.1(f) for separate potable water supply connections, sewer inlet connections, and electrical power supply outlets at individual recreational vehicle stands.]*

5.3 Recreational Park Trailer Site.

5.3.1 Recreational Park Trailer Stand Construction.

5.3.1.1 Each recreational park trailer stand shall be installed using a method to accommodate the recreational park trailer setup and minimize the possible settling of the recreational park trailer in its setup mode.

5.3.1.2 Recreational park trailer sites shall have a potable water supply connection, sewer inlet connection, and electrical power supply for each individual recreational park trailer stand.

Copyright National Fire Protection Association
Provided by IHS under license with NFPA
No reproduction or networking permitted without license from IHS
Not for Resale

5.3.2 Grouped Utility Connection Assembly. The utility connections shall be permitted to be grouped together in one assembly in accordance with 5.3.2.1 and 5.3.2.2.

5.3.2.1 The assembly shall be located on the left rear half of the site (left side of the recreational park trailer) within 6 ft (1.8 m) of the stand.

5.3.2.2 For the purpose of providing utility connections to individual recreational park trailers, the assembly shall be listed for recreational vehicle or recreational park trailer use. *[See Figure B.1(c) and Figure B.1(f) for separate potable water supply connections, sewer inlet connections, and electrical power supply outlets at individual recreational park trailer stands.]*

5.4 Camping Unit Site.

5.4.1 Each camping unit site shall have a designated parking space for a full-sized car or pickup truck.

5.4.2 This parking space shall be permitted to be on the camping unit site or in a common parking area.

5.4.3 These parking spaces shall be constructed to minimize the development of ruts or low spots by vehicle tires.

Chapter 6 Fire Safety

6.1 Fire Detection and Alarm Services.

6.1.1 Water Supplies for Fire Protection. Water supplies for fire protection purposes shall meet the requirements of the authority having jurisdiction. *(See also NFPA 1142 and NFPA 1.)*

6.1.2 Detection Systems in Structures Open to the Public. Fire detection and alarm systems installed in structures open to the public shall be installed in accordance with *NFPA 72*.

6.1.3 Fire Extinguishers.

6.1.3.1 Portable fire extinguishers provided by the recreational vehicle park or campground operator shall be of the multipurpose dry chemical type or equivalent.

6.1.3.2 Extinguishers shall have a minimum rating of 2-A:20-B:C.

6.1.3.3 Extinguishers shall be installed in accordance with NFPA 10.

6.1.4 Use of Fire Protection Equipment. The recreational vehicle park and campground operator shall instruct the park staff in the use of the fire protection equipment available in the park and define the staff's specific duties in the event of fire.

6.1.5 Evacuation Plan. Each recreational vehicle park and campground shall have a written evacuation plan approved by the authority having jurisdiction.

6.1.6 Campfire Locations. Approved designated outdoor campfire locations, if provided, shall be in areas where they will not constitute fire hazards to vegetation, undergrowth, trees, recreational vehicles, recreational park trailers, camping units, and structures.

6.2 Fire Safety Rules and Regulations for Recreational Vehicle Parks and Campgrounds — Posting of Emergency Information.

6.2.1 Fire safety rules and regulations shall be conspicuously posted by management.

6.2.2 Regulations shall contain the following information and any additional information as required by the fire department:

(1) Telephone number of the fire department or other information needed for summoning the fire department, such as the location of the nearest fire alarm box
(2) Telephone number of the police department
(3) Telephone number of the recreational vehicle park or campground (or any other data that would aid in ensuring prompt fire department response, such as the recreational vehicle park or campground name and address)
(4) Location of the nearest public telephone

6.3 Propane Containers. Propane containers not installed in accordance with NFPA 1192 shall be installed in accordance with NFPA 58.

Chapter 7 Environmental Health and Sanitation

7.1 General. All plumbing shall be installed in accordance with the applicable plumbing codes of the authority having jurisdiction or with this standard.

7.2 Potable Water Supply and Distribution.

7.2.1 Quality. The supply or supplies of water shall comply with the appropriate potable water standards of the authority having jurisdiction or, in the absence thereof, shall meet the intent of the Safe Drinking Water Act, the National Primary Drinking Water Regulations, and federal regulations pursuant thereto.

7.2.2 Sources.

7.2.2.1 Only water from approved sources shall be used.

7.2.2.2 Where an approved public water supply system is available, it shall be used.

7.2.2.3 Where the recreational vehicle park or campground has its own water supply system, the components of the system shall be approved.

7.2.2.4 A water supply system that is used on a seasonal basis shall be provided with means for draining or shall be protected from freezing.

7.2.3 Prohibited Connections. The potable water supply shall not be connected to any nonpotable or unapproved water supply nor be subject to any backflow or back siphonage.

7.2.4 Supply. The water supply system shall be designed and constructed in accordance with the following:

(1) A minimum of 25 gal (94.6 L) per day per site for sites without individual water connections
(2) A minimum of 50 gal (189.3 L) per day per site for sites with individual water connections
(3) A minimum of 50 gal (189.3 L) per day per site if water-flush closets are provided in restrooms

7.2.5 Pressure and Volume.

7.2.5.1 Where water is distributed under pressure, the water supply system shall be designed to provide a minimum flow pressure of 20 psi (137.8 kPa) with a minimum flow of 2 gpm (9.1 L/min) at any outlet.

7.2.5.2 The maximum pressure at any site shall not exceed 80 psi (551.2 kPa).

Copyright National Fire Protection Association
Provided by IHS under license with NFPA
No reproduction or networking permitted without license from IHS
Not for Resale

7.2.6 Outlets.

7.2.6.1 Water outlets shall be easily accessible and, when not piped to individual camping unit sites, shall not be located farther than 300 ft (91.4 m) from any site.

7.2.6.2 Provisions shall be made to prevent accumulations of standing water or the creation of muddy conditions at each water outlet.

7.2.7 Storage Tanks.

7.2.7.1 Water storage tanks shall be constructed of impervious materials, protected against contamination, and provided with locked, watertight covers.

7.2.7.2 Any overflow or ventilation openings shall be downfacing and provided with corrosion-resistant screening of not less than No. 24 mesh to prevent the entrance of insects and vermin.

7.2.7.3 Water storage tanks shall not have direct connections to sewers.

7.2.8 Wells, Springs, and Similar Sources.

7.2.8.1 All wells, springs, and similar sources of water intended for potable purposes shall be properly constructed, located, and protected to exclude surface contamination and to minimize the potential of contamination from unsanitary hazards.

7.2.8.2 A well equipped with a hand pump shall be protected by a concrete apron surrounding the pump suction pipe to divert waste water away from the well.

7.2.8.3 Hand pumps, when provided, shall be so designed and installed that all openings into the interior of the pump are protected so as to exclude contamination.

7.2.8.4 The top of the casing shall extend at least 1 in. (25.4 mm) above the face of the flange.

7.2.8.5 Each hand pump shall be bolted to a mounting flange securely fastened to the well casing.

7.2.8.6 Open pitcher pumps shall not be used.

7.3 Potable Water Connections at Individual Sites.

7.3.1 When provided, the water connections for potable water to individual recreational vehicle and recreational park trailer sites shall be located on the left rear half of the site within 6 ft (1.8 m) of the recreational vehicle stand or 6 ft (1.8 m) of the recreational park trailer stand. *[See Figure B.1(a) through Figure B.1(f) for diagrams of typical arrangements.]*

7.3.2 Each potable water connection shall consist of a water riser pipe that shall be equipped with a threaded male spigot located at least 12 in. (304.8 mm) but not more than 24 in. (609.6 mm) above grade level for the attachment of a standard water hose.

7.3.3 Potable water connections shall be equipped with an atmospheric vacuum-breaker.

7.4 Drinking Fountains. If provided, drinking fountains shall be in conformance with ANSI/ARI 1010.

7.5 Sanitary Conveniences.

7.5.1 Sanitary Facilities.

7.5.1.1 Toilets shall be provided at one or more locations in every recreational vehicle park and campground except at primitive and semi-primitive campgrounds.

7.5.1.2 Toilets shall be located within a 500 ft (152.4 m) radius from any recreational vehicle, recreational park trailer, and/or camping unit site not provided with an individual sewer connection.

7.5.1.3 Every toilet room shall have a minimum ceiling height of 7 ft (2.1 m).

7.5.1.4 Facilities for males and for females shall be appropriately marked.

7.5.1.5 Unless artificial light is provided, the total window or skylight area shall be equal to at least 10 percent of the floor area.

7.5.1.6 Unless provided with a listed mechanical ventilation system, every toilet room shall have a permanent, nonclosable, screened opening(s) having a total area not less than 5 percent of the floor area that opens directly to the exterior in order to provide proper ventilation.

7.5.1.7 Listed exhaust fan(s), vented to the exterior and having a rating in cubic feet per minute of at least 25 percent of the total volume of the toilet room(s) served, shall be considered as meeting the requirements of this subsection.

7.5.1.8 All openable windows and vents to the outside shall be provided with fly-proof screens of not less than No. 16 mesh.

7.5.1.9 All doors to the exterior shall open outward, be self-closing, and be visually screened by means of a vestibule or wall to prevent direct view of the interior when the exterior doors are open.

7.5.1.10 Such screening shall not be required on single toilet units.

7.5.1.11 The interior finish of walls shall be moisture resistant to a height of 4 ft (1.2 m) to facilitate washing and cleaning.

7.5.1.12 The floors shall be resistant to water. Any structure having flush toilets shall be provided with a floor drain in the toilet room.

7.5.1.13 Chemical and recirculating toilets shall be of an approved type.

7.5.1.14 Where provided, privies shall be of an approved type.

7.6 Number, Location, and Arrangement of Toilets, Urinals, and Lavatories.

7.6.1 In recreational vehicle parks and in semi-developed and developed campgrounds, a minimum of one toilet shall be provided for each sex up to the first 25 sites.

7.6.2 For each additional 25 sites not provided with sewer connections, an additional toilet for each sex shall be provided.

7.6.3 If water flush toilets are provided, an equal number of lavatories shall be provided up to six toilets.

7.6.3.1 One additional lavatory shall be provided for each two toilets when more than six toilets are required.

7.6.3.2 Each lavatory basin shall have a piped supply of potable water and shall drain into the sewerage system.

7.6.4 If separate facilities are provided for men and women, urinals shall be acceptable for no more than one-third of the toilets required in the men's facilities.

7.6.4.1 Only individual stall or wall-hung urinals shall be acceptable.

7.6.4.2 Floor urinals shall be prohibited.

Copyright National Fire Protection Association
Provided by IHS under license with NFPA
No reproduction or networking permitted without license from IHS
Not for Resale

7.6.5 Toilets shall be of an approved or listed type and shall be provided with seats with open fronts.

7.6.6 Each toilet shall be in a separate compartment and shall be provided with a door with a latch for privacy and a holder or dispenser for toilet paper.

7.6.6.1 Dividing walls or partitions shall be at least 5 ft (1.5 m) high and, if separated from the floor, shall be by a space not greater than 12 in. (304.8 mm).

7.6.6.2 Toilet compartments shall be not less than 30 in. (762 mm) in width, and there shall be not less than 30 in. (762 mm) of clear space in front of each toilet.

7.6.7 Each female toilet room shall be provided with a receptacle for sanitary napkins. The receptacle shall be of durable, nonpervious, and readily cleanable material and shall be provided with a lid.

7.7 Showers.

7.7.1 Showers shall be of the individual type, and each shower area shall be visually screened from view.

7.7.2 All shower compartments, regardless of shape, shall have a minimum finished interior of 1024 $in.^2$ (0.66 m^2) and shall also be capable of encompassing a 30 in. (762 mm) circle.

7.7.3 The minimum required area and dimensions shall be measured at a height equal to the top of the threshold and at a point tangent to its centerline.

7.7.4 The minimum area and dimensions shall be maintained to a point 70 in. (1778 mm) above the shower drain outlet with no protrusions other than the fixture valve or valves, shower head, and safety grab bars or rails.

7.7.5 Each shower area shall be designed to minimize the flow of water into the dressing area and shall be properly connected to the sewerage system by means of a trapped inlet.

7.7.6 If showers are provided, an individual dressing area, visually screened from view, shall also be provided with minimum floor area of 3 ft × 3 ft (0.9 m × 0.9 m) per shower, and such dressing areas shall be equipped with a minimum of one clothing hook and stool (or equivalent bench area).

7.7.7 The floors of showers and dressing areas shall have an impervious skid-resistant surface.

7.7.7.1 Wooden racks (duck boards) over shower floors shall be prohibited.

7.7.8 Open showers provided exclusively for the removal of sand and the like following beach activities, and when swimming suits are not removed, need not comply with the provisions of Section 7.7.

7.8 Sewerage Facilities.

7.8.1 Approval and Sewerage Disposal Facilities.

7.8.1.1 Each sewerage disposal system shall be approved.

7.8.1.2 Storm water sewers shall be separate and apart from any sewers intended for the conveyance of sewage.

7.8.2 Pipe Materials, Sizes, and Installation.

7.8.2.1 Piping material and design layout for sewers shall be as approved or specified by the authority having jurisdiction.

7.8.2.2 The minimum diameters of sewer laterals, branches, and mains shall be in accordance with Table 7.8.2.2.

Table 7.8.2.2 Minimum Diameter of Sewer Laterals, Branches, and Mains

Maximum Number of Recreational Vehicle Sites Served	Minimum Pipe Size, (ID) nominal	
	in.	mm
5	3	76
36	4	102
71	5	127
440	6	152

7.8.2.3 Where the sewerage system is sized in accordance with Table 7.8.2.2, the minimum grade or slope of drainage pipe shall be not less than shown in Table 7.8.2.3.

Table 7.8.2.3 Minimum Grade of Slope of Drainage Pipe

Pipe Size		Slope per 100 ft (30.48 m)	
in.	mm	in.	mm
3	76	20	508
4	102	15	381
5	127	11	279
6	152	8	203

7.8.2.4 The sewer lines shall be located to prevent damage from vehicular traffic and frost heaving.

7.8.2.5 All sewer line joints and sewer connections shall be watertight.

7.8.2.6 Cleanouts shall be provided at the upper terminal of each sewer main or branch and at intervals not exceeding 200 ft (61 m) along any straight run or portion thereof.

7.8.2.7 Every change in alignment or grade in excess of 22 degrees shall be served by a cleanout, except that a cleanout shall not be required for a single 45 degree bend or a single offset that comprises two 45 degree bends.

7.8.2.8 Manholes shall be permitted in lieu of cleanouts and shall be spaced not more than 400 ft (121.9 m) apart.

7.8.2.9 Horizontal-to-horizontal changes in direction shall be made with 45 degree "Y" branches, combination "Y" and ⅛ bend branches, or other approved fittings of equivalent sweep.

7.8.3 Sewer Inlet Connections at Individual Recreational Vehicle and Recreational Park Trailer Sites.

7.8.3.1 Where provided, the sewer connections for individual recreational vehicle and recreational park trailer sites shall be so located to minimize the risk of physical damage.

7.8.3.2 Where provided, the sewer inlet to individual sites shall be located on the left rear half of the site within 4 ft (1.2 m) of the stand for recreational vehicles and for a recreational park trailer. *[See Figure B.1(a) through Figure B.1(f) for diagrams of typical arrangements.]*

Copyright National Fire Protection Association
Provided by IHS under license with NFPA
No reproduction or networking permitted without license from IHS
Not for Resale

7.8.3.3 The sewer inlet connection shall consist of a sewer riser extending vertically to grade.

7.8.3.3.1 The minimum diameter of the sewer riser pipe shall be 3 in. (76.2 mm), and it shall be provided with a 4 in. (101.6 mm) inlet or a minimum 3 in. (76.2 mm) female fitting.

7.8.3.3.2 The sewer riser pipe shall be firmly imbedded in the ground and be protected against damage from heaving or shifting and the entrance of surface water.

7.8.3.3.3 The sewer riser pipe shall be provided with a tight-fitting plug or cap that shall be secured by a durable chain (or equivalent) to prevent loss.

7.8.3.3.4 The sewer riser pipe shall not be required to be individually vented, regardless of the use of traps at each inlet.

7.9 Sanitary Disposal Stations.

7.9.1 One sanitary disposal station shall be provided for each 100 recreational vehicle sites, recreational park trailer sites, and combinations or parts thereof that are not equipped with individual sewer connections.

7.9.2 Each sanitary disposal station shall be level, shall be easily accessible from the service road, and shall provide easy entry and exit for recreational vehicles and recreational park trailers.

7.9.3 Construction of Sanitary Disposal Stations.

7.9.3.1 Unless other approved means are used, each sanitary disposal station shall have a concrete slab with a center drain inlet located so as to be on the road side (left) of the recreational vehicle or recreational park trailer.

7.9.3.2 The slab shall be not less than 3 ft × 3 ft (0.9 m × 0.9 m), at least 3½ in. (88.9 mm) thick, and properly reinforced, the surface of which is trowelled to a smooth finish and sloped from each side inward to a sewer inlet.

7.9.3.3 The sewer inlet shall consist of a 4 in. (101.6 mm) self-closing, foot-operated hatch of approved material with a tight-fitting cover.

7.9.3.3.1 The hatch body shall be set in the concrete of the slab, with the lip of the opening flush with its surface to facilitate the cleansing of the slab with water.

7.9.3.3.2 The hatch shall be properly connected to a sewer inlet, which shall discharge to an approved sanitary sewerage disposal facility constructed in accordance with 7.8.1. *[See Figure B.1(h) for a diagram of a typical arrangement.]*

7.9.4 Flushing Facilities.

7.9.4.1 Recreational vehicle parks and developed campgrounds provided with a piped water supply system shall have means for flushing recreational vehicle and recreational park trailer holding tanks.

7.9.4.1.1 The flushing system shall consist of a piped supply of water under pressure, terminating in a valved outlet located and installed to minimize damage by automobiles, tow vehicles, recreational vehicles, or recreational park trailers.

7.9.4.1.2 The flushing device shall consist of a properly supported riser terminating at least 24 in. (609.6 mm) above the ground surface with a ¾ in. (19 mm) valved outlet to which is screwed a flexible hose.

7.9.4.2 The water supply to the flushing device shall be protected from backflow by means of a listed vacuum breaker located downstream from the last shutoff valve.

7.9.4.3 Adjacent to the flushing arrangement, there shall be posted a sign of durable material, not less than 24 in. × 24 in. (609.6 mm × 609.6 mm) in size, and inscribed thereon in clearly legible letters on a contrasting background shall be the following:

DANGER — NOT TO BE USED FOR DRINKING OR DOMESTIC PURPOSES.

7.10 Potable Water Supply Stations.

7.10.1 A potable water supply station for filling potable water tanks, if provided, shall be located at least 50 ft (15.2 m) from a waste disposal station.

7.10.2 When such is provided, adjacent to the potable water outlet, there shall be posted a sign of durable material, not less than 24 in. × 24 in. (609.6 mm × 609.6 mm) in size, and inscribed thereon in clearly legible letters on a contrasting background shall be the following:

POTABLE WATER. NOT TO BE USED FOR FLUSHING WASTE TANKS.

7.10.3 The potable water shall be protected from backflow by means of a listed vacuum breaker located downstream from the last shutoff valve.

7.11 Refuse Disposal. Facilities for the storage, collection, and disposal of refuse shall be provided.

Annex A Explanatory Material

Annex A is not a part of the requirements of this NFPA document but is included for informational purposes only. This annex contains explanatory material, numbered to correspond with the applicable text paragraphs.

A.1.1.2 ANSI A119.2/NFPA 1192 and ANSI A119.5 are companion standards on which the provisions of this standard are largely based.

A.1.2 Facilities provided in existing recreational vehicle parks and campgrounds can be continued in use, providing such facilities do not constitute a recognized health or safety hazard.

A.3.2.1 Approved. The National Fire Protection Association does not approve, inspect, or certify any installations, procedures, equipment, or materials; nor does it approve or evaluate testing laboratories. In determining the acceptability of installations, procedures, equipment, or materials, the authority having jurisdiction may base acceptance on compliance with NFPA or other appropriate standards. In the absence of such standards, said authority may require evidence of proper installation, procedure, or use. The authority having jurisdiction may also refer to the listings or labeling practices of an organization that is concerned with product evaluations and is thus in a position to determine compliance with appropriate standards for the current production of listed items.

A.3.2.2 Authority Having Jurisdiction (AHJ). The phrase "authority having jurisdiction," or its acronym AHJ, is used in NFPA documents in a broad manner, since jurisdictions and approval agencies vary, as do their responsibilities. Where public safety is primary, the authority having jurisdiction may be a federal, state, local, or other regional department or individual such as a fire chief; fire marshal; chief of a fire prevention bureau, labor department, or health department; building official; electrical inspector; or others having statutory

Copyright National Fire Protection Association
Provided by IHS under license with NFPA
No reproduction or networking permitted without license from IHS
Not for Resale

authority. For insurance purposes, an insurance inspection department, rating bureau, or other insurance company representative may be the authority having jurisdiction. In many circumstances, the property owner or his or her designated agent assumes the role of the authority having jurisdiction; at government installations, the commanding officer or departmental official may be the authority having jurisdiction.

A.3.2.4 Listed. The means for identifying listed equipment may vary for each organization concerned with product evaluation; some organizations do not recognize equipment as listed unless it is also labeled. The authority having jurisdiction should utilize the system employed by the listing organization to identify a listed product.

A.3.3.2.1.2 Primitive Campground. These campgrounds are accessible only by walk-in, pack-in, or equestrian campers.

A.3.3.2.1.4 Semi-Primitive Campground. Rudimentary facilities (privies and/or fireplaces) can be provided for the comfort and convenience of campers.

A.3.3.3 Camping Unit. The basic units include but are not limited to recreational vehicles, recreational park trailers, camping cabins, housekeeping cabins, tents, teepees, yurts, and other rental accommodations.

A.3.3.9 Gross Trailer Area. In calculating the square footage, measurements are taken on the exterior in its setup mode. Square footage includes all siding, corner trims, moldings, storage spaces, and areas enclosed by windows, but not the roof overhangs.

A.3.3.20 Recreational Vehicle Park. RV parks are primarily designed to accommodate recreational vehicles, recreational park trailers, and/or other camping units.

A.3.3.24 Service Structure. The structure may include other facilities for the convenience of the owner or the occupants of the recreational vehicle park or campground.

A.5.1.1.4.1 Where there could be possible time response delays for emergency equipment (fire, police, or ambulance services) occasioned by a single access to recreational vehicle park or developed campground (such as might be caused by railroad crossings, limited access highways, one-way streets, or grades that can become impassable under snow or icing conditions), a second access or emergency access roadway may be required. (See also NFPA 1600, *Standard on Disaster/Emergency Management and Business Continuity Programs*, and NFPA 1144, *Standard for Reducing Structure Ignition Hazards from Wildland Fire*, for related information on access and evacuation.)

A.5.1.2.4 See Figure A.5.1.2.4.

A.5.1.2.5 See Figure A.5.1.2.5.

A.5.1.8 In design and construction, consideration should be given to elevation, distance, and angle with respect to access to the camping unit stand to provide for safe and efficient placement and removal of camping units.

Annex B Typical Recreational Vehicle Park or Campground Site Plans

This annex is not a part of the requirements of this NFPA document but is included for informational purposes only.

B.1 Figure B.1(a), Figure B.1(b), Figure B.1(c), Figure B.1(d), Figure B.1(e), Figure B.1(f), Figure B.1(g), and Figure B.1(h) show typical examples of utility service connections that are permitted to be used in developing new recreational vehicle and recreational park trailer sites of the "drive-through" and "reverse pull-through" types. These examples should not be interpreted as indicating mandatory requirements.

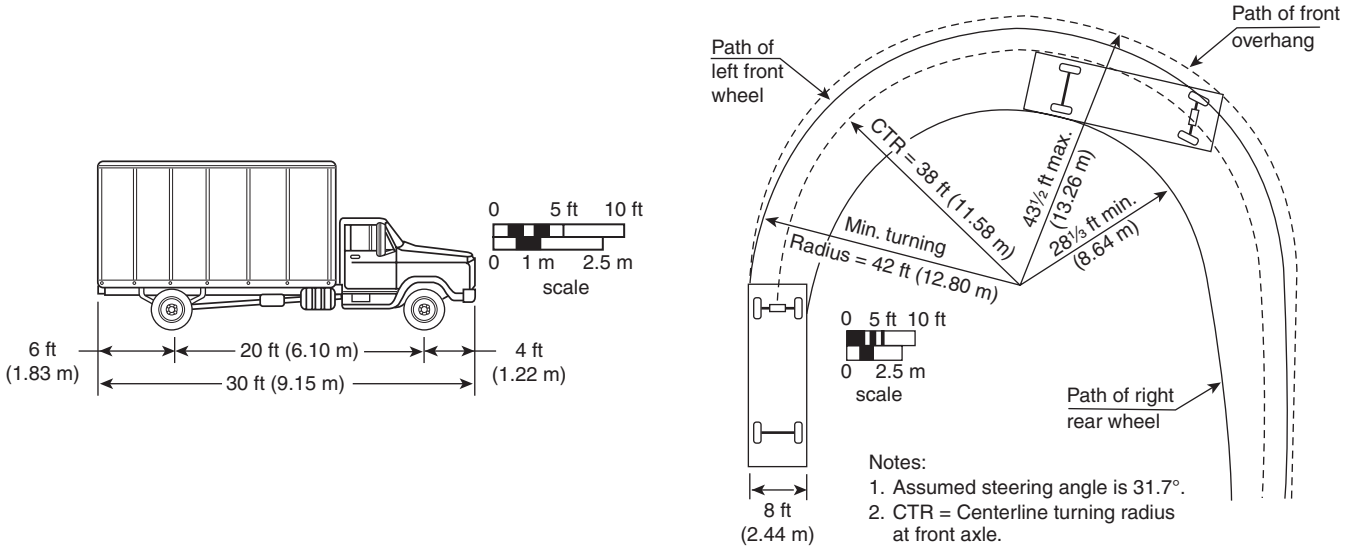

FIGURE A.5.1.2.4 Dead-End Turning Arrangement — Radial Approach.

Copyright National Fire Protection Association
Provided by IHS under license with NFPA
No reproduction or networking permitted without license from IHS
Not for Resale

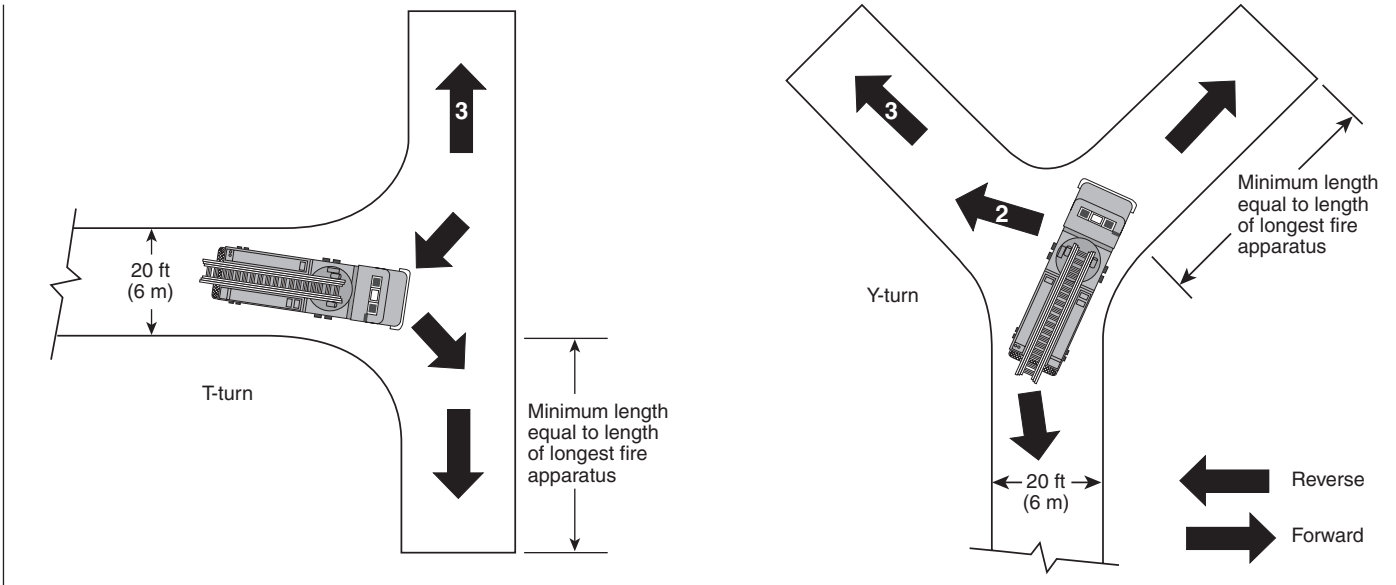

FIGURE A.5.1.2.5 Dead-End Turning Arrangement — T-Turn and Y-Turn.

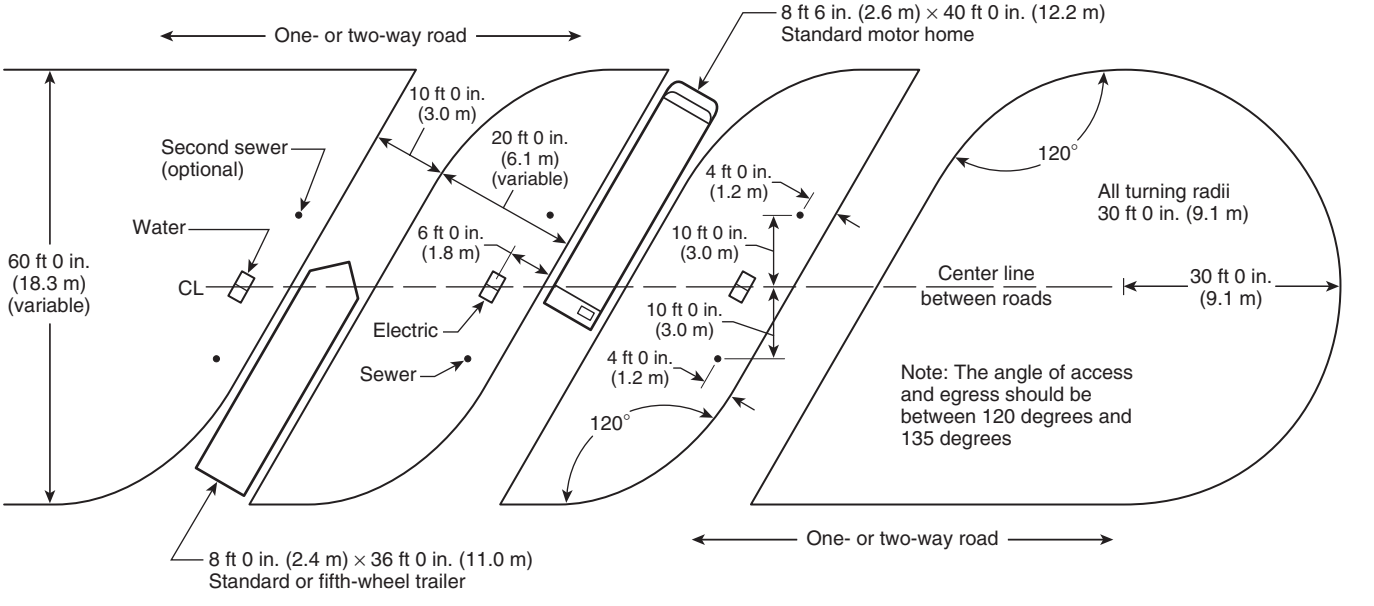

FIGURE B.1(a) One Optional Arrangement for a Recreational Vehicle Park or Campground Standard Pull-Through Site Showing Water, Sewer, and Electrical Utility Connection Points.

Copyright National Fire Protection Association
Provided by IHS under license with NFPA
No reproduction or networking permitted without license from IHS
Not for Resale

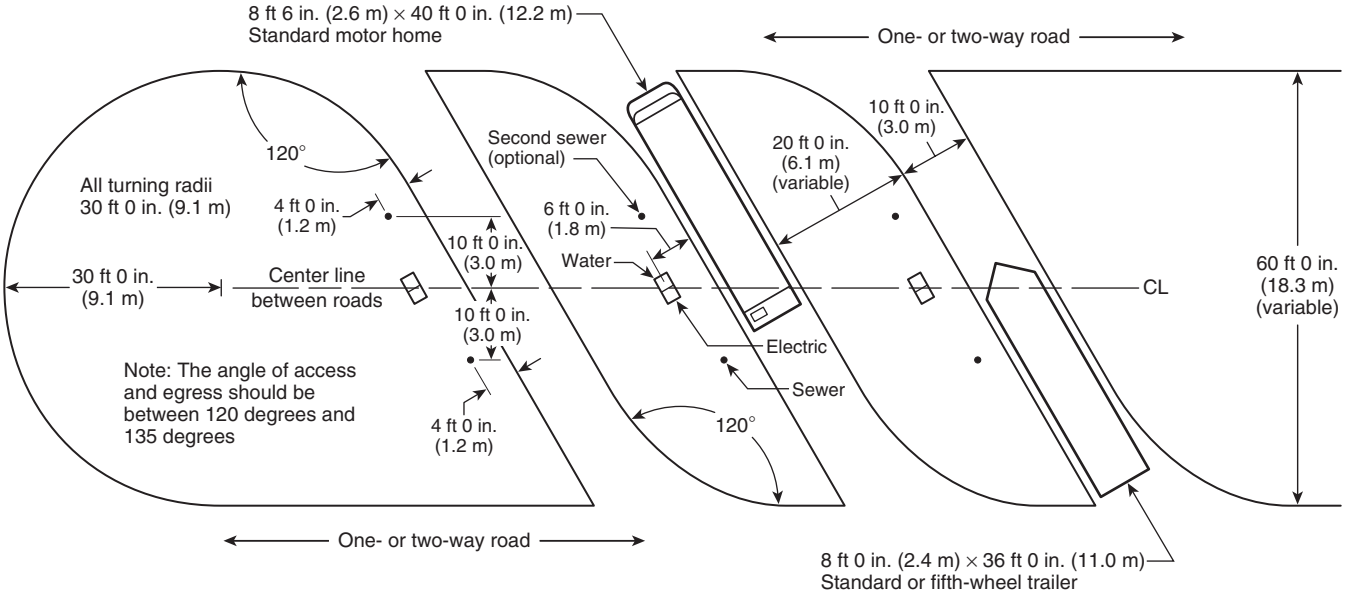

FIGURE B.1(b) One Optional Arrangement for a Recreational Vehicle Park or Campground Reverse Pull-Through Site Showing Water, Sewer, and Electrical Utility Connection Points.

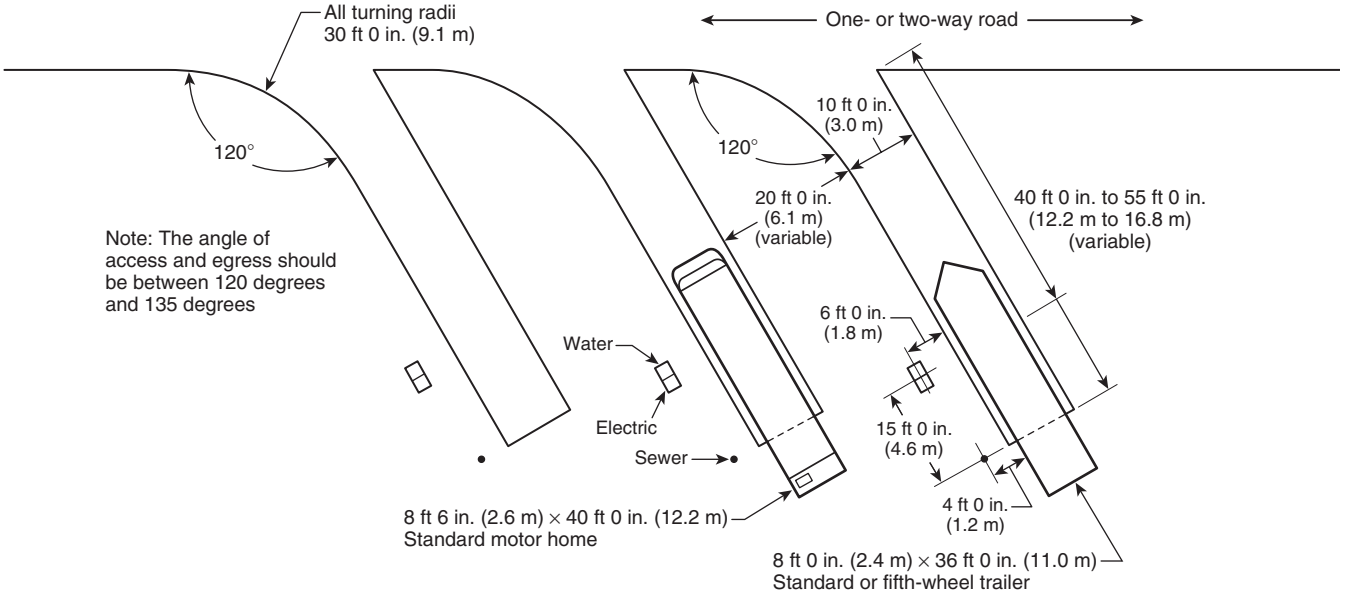

FIGURE B.1(c) One Optional Arrangement in a Recreational Vehicle Park or Campground Reverse Pull-Through Site for a Recreational Vehicle or Park Trailer Showing Water, Sewer, and Electrical Utility Connection Points.

--`,,```,,,,````-`-`,,`,,`,`,,`---
Copyright National Fire Protection Association
Provided by IHS under license with NFPA
No reproduction or networking permitted without license from IHS
Not for Resale

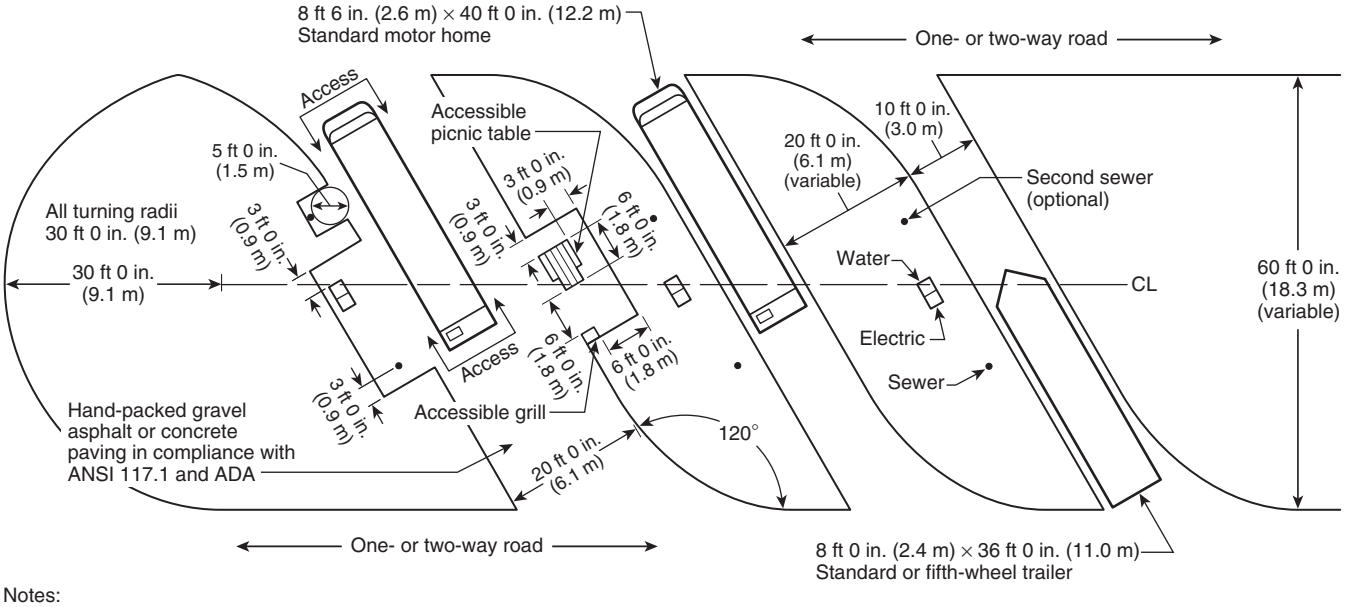

Notes:
1. The utilities are located in the same place as they are in the reverse pull-through site.
2. The angle of access and egress should be between 120 degrees and 135 degrees.

FIGURE B.1(d) One Optional Arrangement for a Recreational Vehicle Park or Campground for a Handicapped-Accessible Standard Pull-Through Site.

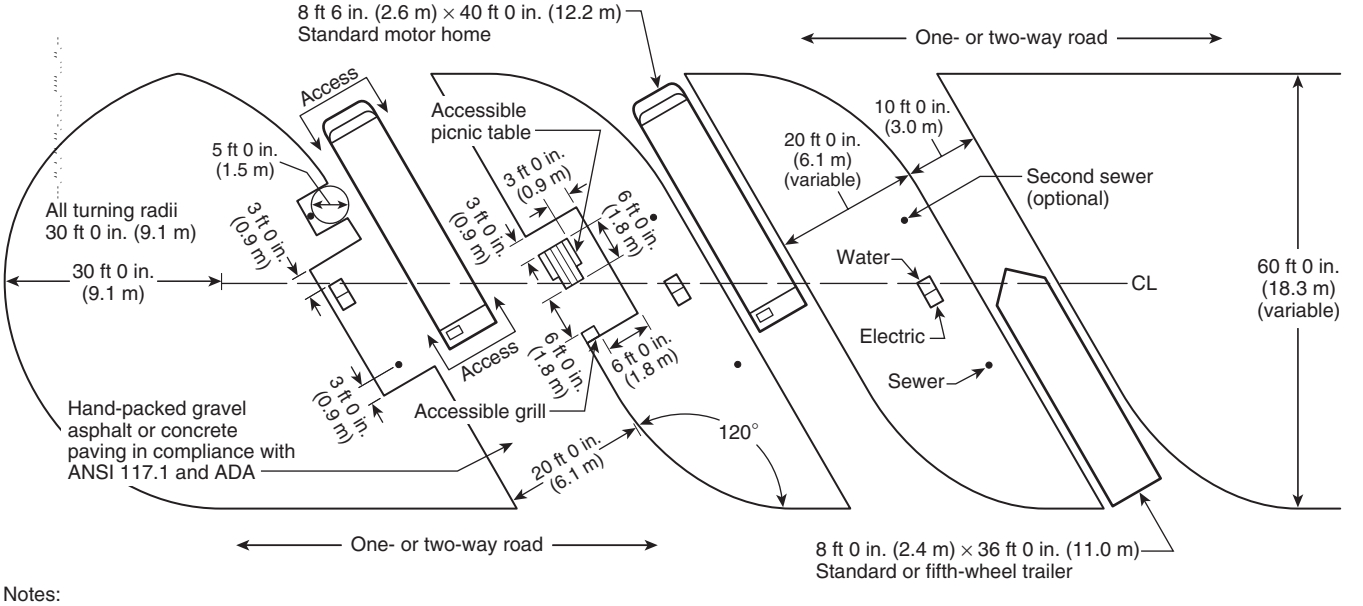

Notes:
1. The utilities are located in the same place as they are in the reverse pull-through site.
2. The angle of access and egress should be between 120 degrees and 135 degrees.

FIGURE B.1(e) One Optional Arrangement for a Recreational Vehicle Park or Campground for a Handicapped-Accessible Reverse Pull-Through Site.

Copyright National Fire Protection Association
Provided by IHS under license with NFPA
No reproduction or networking permitted without license from IHS
Not for Resale

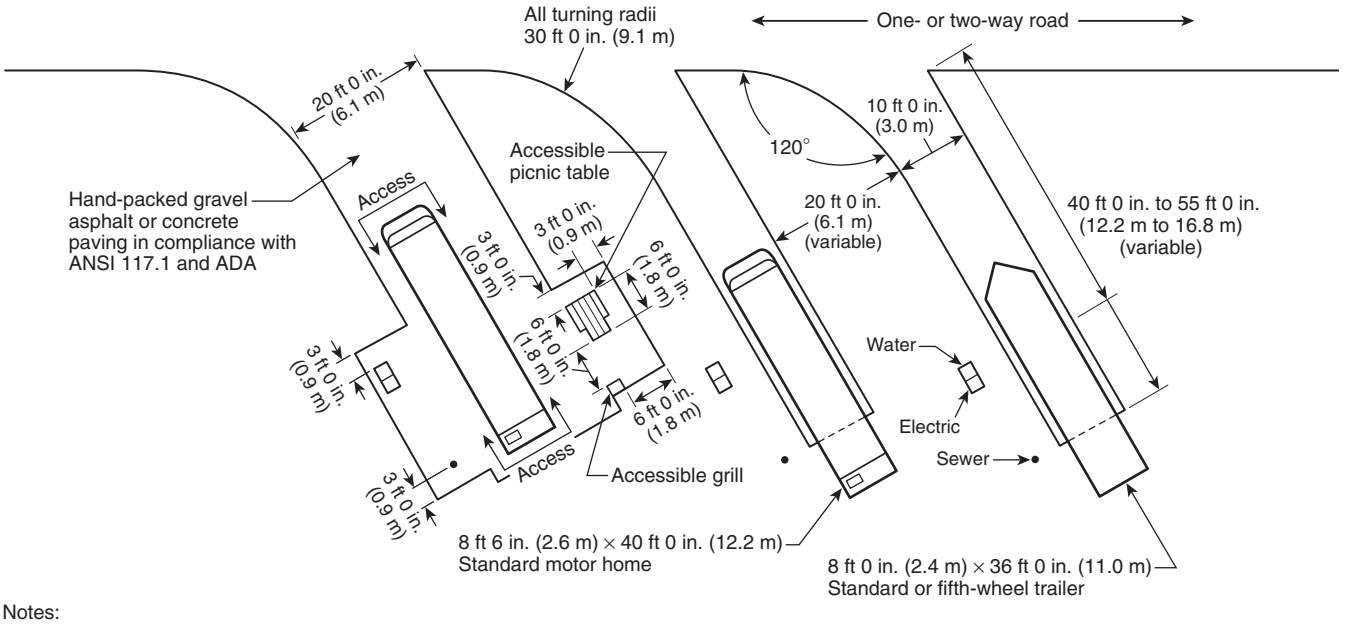

Notes:
1. The utilities are located in the same place as they are in the reverse pull-through/park trailer site.
2. The angle of access and egress should be between 120 degrees and 135 degrees.

FIGURE B.1(f) One Optional Arrangement for a Recreational Vehicle Park or Campground for a Handicapped-Accessible Reverse Pull-Through Site for a Recreational Vehicle Park Trailer.

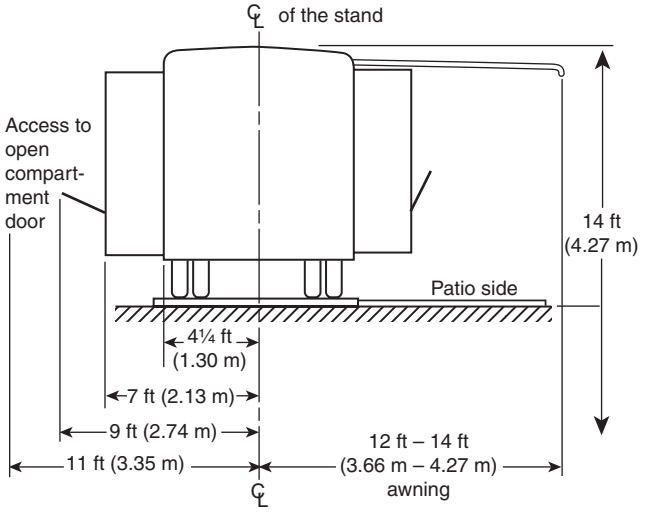

Note: These dimensions are approximate and can vary depending on the recreational vehicle design.

FIGURE B.1(g) End View of Arrangement for Recreational Vehicle Park Trailer.

Annex C Glossary

The following terms or portions thereof are not used within this standard but are listed here for informational purposes only and thus are not considered part of the requirements of this document.

C.1 Accessory Structure. Any structure maintained within recreational vehicle parks or campgrounds that serves the camping unit. Accessory structures are not attached to the camping unit and typically contain no plumbing or electrical fixtures.

C.2 Accessory Structure/Storage. A structure located on a camping unit site that is designed and used solely for the storage and use of personal equipment and possessions of the RVer or camper and could include storage structures and greenhouses.

C.3 Accessory Structures/Uses. Offices, employee or operator living units, recreational facilities, grocery stores, convenience stores, gift shops, service structures, restrooms, dumping stations, showers, laundry facilities, storage units, and other support structures customarily a part of a recreational vehicle park or campground operation.

C.4 Add-on Structure. Structure attached to or immediately adjacent to the camping unit that provides additional space or service.

C.5 Awning. A shade supported by posts or columns and partially supported by the camping unit.

C.6 Cabin/Camping. A hard-sided "tent-like" shelter less than 400 ft^2 (37.2 m^2) in area, typically without plumbing, that is designed to facilitate relocation.

C.7 Cabin/Housekeeping. A structure approved by the authority having jurisdiction that provides guests with full service amenities.

C.8 Camper(s). A person or persons participating in RVing or camping.

Copyright National Fire Protection Association
Provided by IHS under license with NFPA
No reproduction or networking permitted without license from IHS
Not for Resale

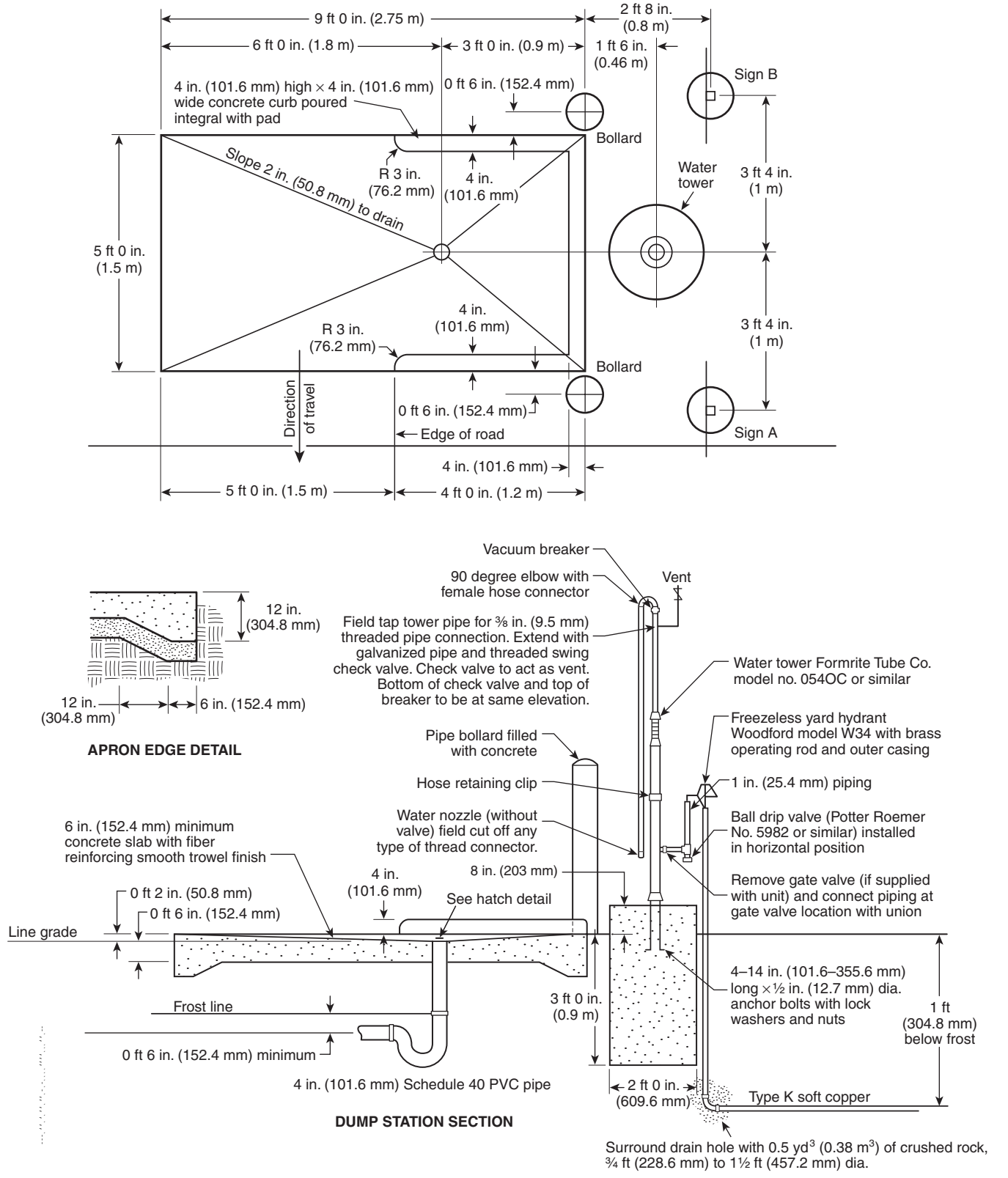

FIGURE B.1(h) One Optional Arrangement for a Sanitary Disposal Station on a Recreational Vehicle Park or Campground.

Copyright National Fire Protection Association
Provided by IHS under license with NFPA
No reproduction or networking permitted without license from IHS
Not for Resale

C.9 Carport. A structure located within a camping unit site used for parking of vehicles.

C.10 Environmental Studies. A collection of research necessary to protect the environment and mitigate impacts often required by the authority having jurisdiction.

C.11 Environmental Protection. Measures employed in the protection or mitigation of the environment during construction such as erosion control, vegetation plantings with noninvasive plants and similar efforts.

C.12 Greenbelt. A strip of land, containing landscape, site obscuring, or other aesthetic features, intended to buffer potentially incompatible uses. Greenbelts might include utilities and other underground facilities but not camping units.

C.13 Guest. An invited visitor to an RV park or campground.

C.14 Liquid Waste ("Gray Water"). Discharge from fixture, appliance, or appurtenance in connection with a plumbing system that does not receive body waste.

C.15 Occupancy. The presence of camper(s) in a camping unit site for a night.

C.16 Recreational Vehicle/Dependent. A recreational vehicle not containing sanitary facilities with devices for connecting to a waste disposal system.

C.17 Recreational Vehicle/Independent. A recreational vehicle containing sanitary facilities with devices for connecting to a waste disposal system. This type of recreational vehicle is also referred to as a self-contained recreational vehicle.

C.18 Recreational Vehicle Park Types.

C.18.1 Ownership/Membership and Specialty. A recreational vehicle park or campground where either membership is open to members or owners only or the sites are individually owned. This category also includes recreational vehicle parks or campgrounds that are owned or cater to specific audiences such as religious organizations, equestrian groups, square dancers, clothing optional recreationalists, and so on.

C.18.2 Destination. A recreational vehicle park or campground containing facilities (e.g., swimming pools, restaurants, golf courses, and planned recreational programs, etc.) and catering to RVers or campers that will typically travel extended distances to stay for extended periods (e.g., a weekend, a week, or longer).

C.18.3 Extended Stay. A recreational vehicle park or campground that caters to extended stays, full-timers, and seasonal rather than for short-term accommodations. Extended stay facilities tend to occur in certain geographical areas.

C.18.4 Senior Adult. A recreational vehicle park or campground for the exclusive use of senior individuals 55 years of age or older.

C.18.5 Traveler. A recreational vehicle park or campground where RVers and campers stay for a day or week as an alternative to other types of lodging while traveling or vacationing or to enjoy the local attractions within a given area.

C.19 Rental/On-Site. Camping unit placed within a recreational vehicle park or campground that is available for rental to guests.

C.20 RVers. Individuals that use a camping unit for RVing and camping including, but not limited to, the categories described in C.20.1 through C.20.6.

C.20.1 Daily/Overnighter. RVers and campers that stay for a day or week as an alternative to other types of lodging, typically, travelers, area visitors, or tourists enjoying local attractions.

C.20.2 Extended Stay. RVers and campers that stay in a given recreational vehicle park or campground for an extended period of time. The term *extended stay* is generally used in describing four groups as follows:

(1) Individuals who have selected a recreationally centered lifestyle and that choose a specific location for a traditional season ("sunbirds" and "snowbirds").
(2) Individuals who have selected RVing as interim lodging during temporary transfer to a new locality or while awaiting construction of permanent housing.
(3) Individuals who frequently relocate for employment purposes.
(4) Individuals who have selected a recreational vehicle, recreational park trailer, and/or camping unit as a housing alternative for extended periods.

C.20.3 Full Timers. Individuals who have opted, because of the benefits of a recreation-oriented RV lifestyle or for economic reasons, to use their camping unit as their only or primary residence.

C.20.4 Seasonals. Individuals who have chosen to leave their camping units in special storage areas or "on the site" at a specific RV park or campground. Many seasonals leave their camping unit on site for the season and typically occupy their camping units from time to time to enjoy organized recreational programs.

C.20.5 Snowbirds. Snowbirds are mostly RVers who own homes in the snow areas. Many of these individuals migrate from North to South in the winter months and South to North in the spring. Areas of dry and warmer climate are typically sought by the snowbirds for varying periods during the North's coldest season.

C.20.6 Sunbirds. Sunbirds are RVers who typically own homes in the warmer areas of the states where they spend the winter months, moving North toward cooler climate during the extremely hot summer months. They tend to have travel characteristics similar to those of snowbirds.

C.21 Recreational Facilities. Amenities within RV parks and campgrounds for the purposes of customer enjoyment including sports facilities, equipment for amusement, playground facilities, and swimming pools and spas.

C.22 RVing. A lifestyle. Traveling and/or living independently where one chooses, camping for the enjoyment of the outdoors — a way of life. Using a camping unit for recreation. Associating with the fraternity of other like individuals. Using a camping unit for its intended purpose.

C.23 Slideout. An expandable portion of a recreational vehicle or recreational park trailer that increases the width beyond the highway travel mode when extended.

C.24 Submetering. A form of conservation whereby the guest pays for utilities used. Submetering can be for consumption of electricity, gas, water, and sewer.

C.25 Teepee. A cone-shaped tent.

C.26 Tent/Hard Shell. *See* Cabin/Camping.

C.27 Yurt. A portable structure for lodging specially designed for minimal environmental impact in difficult terrain.

Copyright National Fire Protection Association
Provided by IHS under license with NFPA
No reproduction or networking permitted without license from IHS
Not for Resale

Annex D Informational References

D.1 Referenced Publications. The documents or portions thereof listed in this annex are referenced within the informational sections of this standard and are not part of the requirements of this document unless also listed in Chapter 2 for other reasons.

D.1.1 NFPA Publications. National Fire Protection Association, 1 Batterymarch Park, Quincy, MA 02169-7471.

NFPA 1144, *Standard for Reducing Structure Ignition Hazards from Wildland Fire*, 2008 edition.

NFPA 1192, *Standard on Recreational Vehicles*, 2008 edition.

NFPA 1600, *Standard on Disaster/Emergency Management and Business Continuity Programs*, 2007 edition.

D.1.2 Other Publications.

D.1.2.1 ANSI Publications. American National Standards Institute, Inc., 25 West 43rd Street, 4th floor, New York, NY 10036.

ANSI A119.5, *Standard for Recreational Park Trailers*, 1998.

D.2 Informational References. The following documents or portions thereof are listed here as informational resources only. They are not a part of the requirements of this document.

D.2.1 NFPA Publications. National Fire Protection Association, 1 Batterymarch Park, Quincy, MA 02169-7471.

NFPA 58, *Liquefied Petroleum Gas Code*, 2008 edition.

D.2.2 ASTM Publications. ASTM International, 100 Barr Harbor Drive, P.O. Box C700, West Conshocken, PA 19428-2959.

ASTM Volume 15.07, *Sports Equipment and Facilities*, 2006.

ASTM F1487, *Standard Consumer Safety Performance Specification for Playground Equipment for Public Use*, 2007.

ASTM F1346, *Standard Performance Specification for Safety Covers and Labeling Requirements for All Covers for Swimming Pools, Spas, and Hot Tubs*, 2003.

ASTM F2631, *Standard Practice for Installation of Chain-Link Fence for Outdoor Sports Fields, Sports Courts, and Other Recreational Facilities*, 2007.

ASTM F2291, *Standard Practice for Design of Amusement Rides and Devices*, 2006.

D.2.3 IAF/ANSI Publications.

ANSI/NSPI, *Standard for Public Swimming Pools*, 2003.

D.2.4 U.S. DOT Publications. U.S. Government Printing Office, Washington, DC 20402.

Manual on Uniform Traffic Control Devices (MUTCD), Federal Highway Administration, 23 Code of Federal Regulations, Part 655, Subpart F, 2003.

D.3 References for Extracts in Informational Sections. (Reserved)

Copyright National Fire Protection Association
Provided by IHS under license with NFPA
No reproduction or networking permitted without license from IHS
Not for Resale

Index

Copyright © 2008 National Fire Protection Association. All Rights Reserved.

The copyright in this index is separate and distinct from the copyright in the document that it indexes. The licensing provisions set forth for the document are not applicable to this index. This index may not be reproduced in whole or in part by any means without the express written permission of NFPA.

-A-

Access, means of 5.1.1.4, A.5.1.1.4.1
Accessory structures
Definition 3.3.1, C.1
Roads leading to 5.1.2.1, 5.1.2.2
Storage (definition) C.2
Uses (definition) C.3
Add-on structures (definition) C.4
Alarm systems, in structures open to public 6.1.2
Application of standard 1.3, 4.1
Approved (definition) 3.2.1, A.3.2.1
Authority having jurisdiction (definition) 3.2.2, A.3.2.2
Awnings (definition) C.5

-B-

Bathing facilities 5.1.4
Bridges 5.1.1.6
Buildings ..... *see* Structures

-C-

Cabins
Camping (definition) C.6
Housekeeping (definition) C.7
Camper(s) (definition) C.8
Campfire locations 6.1.6
Campground
Definition 3.3.2
Types 3.3.2.1, A.3.3.2.1.2, A.3.3.2.1.4, C.18
Camping trailer (definition) 3.3.4
Camping unit
Campfires near 6.1.6
Definition 3.3.3, A.3.3.3
Rental/on-site (definition) C.19
Camping unit site ..... 5.4; *see also* Recreational park trailer site; Recreational unit site
Definition 3.3.5
Identification 5.1.7
Potable water at 7.3
Site plans 5.1.1.3
Size 5.1.5
Camping unit stand 5.1.1.3, 5.1.1.4, 5.1.8, A.5.1.1.4.1, A.5.1.8
Definition 3.3.6
Carport (definition) C.9

-D-

Daily/overnighter RVers and campers (definition) C.20.1
Definitions ..... Chap. 3, Annex C
Density (definition) 3.3.7
Design criteria ..... Chap. 5
Destination recreational vehicle parks or campgrounds (definition) C.18.2
Detection systems, in structures open to public 6.1.2
Developed campgrounds
Definition 3.3.2.1.1
Flushing facilities 7.9.4.1
Multiple access roads to A.5.1.1.4.1
Toilets 7.6.1
Differing standards, application of 4.1
Drinking fountains 7.4
Dry chemical fire extinguishers, multipurpose 6.1.3

-E-

Electrical installations 5.3.1.2
Requirements 4.3
Utility connection assembly 5.2.2.1, 5.2.2.2, 5.2.2.4, 5.3.2.2
Emergency information, posting of 6.2.2
Employees, training of 6.1.4
Environmental health and sanitation ..... Chap. 7
Environmental protection (definition) C.11
Environmental studies (definition) C.10
Equivalency to standard 1.5
Evacuation
Plans 6.1.5
Roads for 5.1.1.5
Extended stay recreational vehicle parks or campgrounds (definition) C.18.3
Extended stay RVers and campers (definition) C.20.2
Extinguishers, portable fire 6.1.3

-F-

Fifth wheel trailer (definition) 3.3.8
Fire hazards 6.1.6
Fire safety ..... Chap. 6
Campfire locations 6.1.6
Evacuation plan 6.1.5
Fire protection systems and equipment 6.1
Rules and regulations 6.2
Flushing facilities 7.9.4
Full timers (definition) C.20.3

-G-

Gates 5.1.9
General requirements ..... Chap. 4
Glossary ..... Annex C
Gray water (definition) C.14
Greenbelt (definition) C.12
Gross trailer area 4.5
Definition 3.3.9, A.3.3.9
Guest (definition) C.13

-H-

Hazards, fire 6.1.6
Health and sanitation, environmental ..... *see* Environmental health and sanitation

-L-

Labeled (definition) 3.2.3
Lavatories 7.6
Liquid waste (gray water) (definition) C.14
Listed (definition) 3.2.4, A.3.2.4

-M-

Measurement, units of 1.6
Membership and specialty recreational vehicle parks or campgrounds (definition) C.18.1
Motor homes (definition) 3.3.10

Copyright National Fire Protection Association
Provided by IHS under license with NFPA
No reproduction or networking permitted without license from IHS
Not for Resale

-O-

Occupancy (definition) C.15
Offset (sewer lines) (definition) 3.3.11
Ownership recreational vehicle parks or campgrounds (definition) C.18.1

-P-

Parking spaces 5.4.1
Potable water supply 5.3.1.2, 7.2
Drinking fountains 7.4
At individual sites 7.3
Outlets 7.2.6
Pressure and volume 7.2.5
Prohibited connections 7.2.3
Quality 7.2.1
Sources 7.2.2
Storage tanks 7.2.7
Supply stations 7.10
Definition 3.3.34
Utility connection assembly 5.2.2.1, 5.2.2.2, 5.2.2.4, 5.3.2.2
Wells, springs, and similar sources 7.2.8
Primitive campgrounds
Definition 3.3.2.1.2, A.3.3.2.1.2
Sanitary facilities 7.5.1.1
Propane
Container installation 6.3
Definition 3.3.12
Public water supply (definition) 3.3.13
Pumps, hand 7.2.8.2, 7.2.8.3
Purpose of standard 1.2, A.1.2

-R-

Rear of site 5.2.2.2, 5.2.2.3, 5.3.2.1, 7.3.1
Definition 3.3.14
Recreational park trailer 4.5
Campfires near 6.1.6
Definition 3.3.15
Recreational park trailer site 5.3
Definition ..... *see* Camping unit site
Potable water at 7.3
Sanitary disposal stations 7.9.1
Sewer inlet connections 7.8.3
Recreational park trailer stand
Construction 5.3.1
Definition ..... *see* Camping unit stand
Recreational unit site 5.2
Definition ..... *see* Camping unit site
Grouped utility connection assembly 5.2.2
Potable water at 7.3
Sanitary disposal stations 7.9.1
Sewer inlet connections 7.8.3
Recreational vehicle
Campfires near 6.1.6
Definition 3.3.19
Dependent (definition) C.16
Independent (definition) C.17
Recreational vehicle park
Definition ..... A.3.3.20; *see also* Campground
Types C.18
Recreational vehicle stand
Construction 5.2.1
Definition ..... *see* Camping unit stand
Utility connection assembly, grouped 5.2.2
Recreation facilities (definition) C.21
References ..... Chap. 2, Annex D
Refuse disposal 7.11
Regulations, campground/recreational vehicle site 6.2
Rental/on-site camping units (definition) C.19
Retroactivity of standard 1.4
Roads 5.1.1.4, 5.1.1.5, 5.1.2, A.5.1.1.4.1, A.5.1.2.4, A.5.1.2.5
To accessory structures 5.1.2.1, 5.1.2.2
Dead-end 5.1.2.4, 5.1.2.5, A.5.1.2.4, A.5.1.2.5
RVers
Daily/overnighter (definition) C.20.1
Definition C.20
Extended stay (definition) C.20.2
Full timers (definition) C.20.3
Seasonals (definition) C.20.4
Snowbirds (definition) C.20.5
Sunbirds (definition) C.20.6
RVing (definition) C.22

-S-

Sanitary conveniences ..... 7.5 to 7.7
Sanitary disposal stations 7.9
Definition 3.3.23
Scope of standard 1.1, A.1.1.2
Seasonals (definition) C.20.4
Semi-developed campgrounds
Definition 3.3.2.1.3
Toilets 7.6.1
Semi-primitive campgrounds
Definition 3.3.2.1.4, A.3.3.2.1.4
Sanitary facilities 7.5.1.1
Senior adult recreational vehicle parks or campgrounds (definition) C.18.4
Separation 5.1.6
Service structure (definition) 3.3.24, A.3.3.24
Sewage
Definition 3.3.25
Facilities 7.8
Sewer branches 7.8.2.2, 7.8.2.6
Definition 3.3.26
Sewer inlet connections 5.2.2.3, 5.3.1.2, 7.8.3
Utility connection assembly 5.2.2.1, 5.3.2.2
Sewer laterals 7.8.2.2
Definition 3.3.27
Sewer mains 7.8.2.2, 7.8.2.6
Definition 3.3.28
Shall (definition) 3.2.5
Should (definition) 3.2.6
Showers 7.7
Site plans, recreational vehicle parks and campgrounds 5.1.1, A.5.1.1.4.1
Typical ..... Annex B
Slideout (definition) C.23
Snowbirds (definition) C.20.5
Springs, potable water 7.2.8
Stands, camping unit ..... *see* Camping unit stand
Storage tanks, potable water 7.2.7
Structures ..... *see also* Accessory structures
Add-on (definition) C.4
Building codes, application of 5.1.3
Cabins
Camping (definition) C.6
Housekeeping (definition) C.7
Campfires near 6.1.6
Open to public, detection and alarm systems in 6.1.2
Separation 5.1.6
Service (definition) 3.3.24
Site plans 5.1.1.3
Submetering (definition) C.24
Sunbirds (definition) C.20.6
Swimming and bathing facilities 5.1.4

-T-

Tanks, potable water storage 7.2.7
Teepees (definition) C.25
Telephones, emergency use of 6.2.2

Copyright National Fire Protection Association
Provided by IHS under license with NFPA
No reproduction or networking permitted without license from IHS
Not for Resale

Tent/hard shell (definition) C.6
Toilets 7.5, 7.6
Trailer, park .....*see* Recreational park trailer
Training, employee 6.1.4
Traveler recreation vehicle parks or campgrounds (definition) C.18.5
Travel trailers (definition) 3.3.30
Truck campers (definition) 3.3.31

-U-

Units of measurement 1.6
Urinals 7.6
U.S. federal regulations 4.2
Utility connection assembly 5.2.2, 5.3.2
Definition 3.3.32

-W-

Water riser pipe 7.3.2
Definition 3.3.33
Water supply
For fire protection 5.1.1.3, 6.1.1
Potable .....*see* Potable water supply
Water supply stations 7.10
Definition 3.3.34
Wells, potable water 7.2.8

Wildland/urban interface areas 4.4

-Y-

Yurt (definition) C.27

Copyright National Fire Protection Association
Provided by IHS under license with NFPA
No reproduction or networking permitted without license from IHS
Not for Resale

Sequence of Events Leading to Issuance of an NFPA Committee Document

Step 1: Call for Proposals

- Proposed new Document or new edition of an existing Document is entered into one of two yearly revision cycles, and a Call for Proposals is published.

Step 2: Report on Proposals (ROP)

- Committee meets to act on Proposals, to develop its own Proposals, and to prepare its Report.
- Committee votes by written ballot on Proposals. If two-thirds approve, Report goes forward. Lacking two-thirds approval, Report returns to Committee.
- Report on Proposals (ROP) is published for public review and comment.

Step 3: Report on Comments (ROC)

- Committee meets to act on Public Comments to develop its own Comments, and to prepare its report.
- Committee votes by written ballot on Comments. If two-thirds approve, Report goes forward. Lacking two-thirds approval, Report returns to Committee.
- Report on Comments (ROC) is published for public review.

Step 4: Technical Report Session

- "*Notices of intent to make a motion"* are filed, are reviewed, and valid motions are certified for presentation at the Technical Report Session. ("Consent Documents" that have no certified motions bypass the Technical Report Session and proceed to the Standards Council for issuance.)
- NFPA membership meets each June at the Annual Meeting Technical Report Session and acts on Technical Committee Reports (ROP and ROC) for Documents with "certified amending motions."
- Committee(s) vote on any amendments to Report approved at NFPA Annual Membership Meeting.

Step 5: Standards Council Issuance

- Notification of intent to file an appeal to the Standards Council on Association action must be filed within 20 days of the NFPA Annual Membership Meeting.
- Standards Council decides, based on all evidence, whether or not to issue Document or to take other action, including hearing any appeals.

Committee Membership Classifications

The following classifications apply to Technical Committee members and represent their principal interest in the activity of the committee.

M *Manufacturer:* A representative of a maker or marketer of a product, assembly, or system, or portion thereof, that is affected by the standard.

U *User:* A representative of an entity that is subject to the provisions of the standard or that voluntarily uses the standard.

I/M *Installer/Maintainer:* A representative of an entity that is in the business of installing or maintaining a product, assembly, or system affected by the standard.

L *Labor:* A labor representative or employee concerned with safety in the workplace.

R/T *Applied Research/Testing Laboratory:* A representative of an independent testing laboratory or independent applied research organization that promulgates and/or enforces standards.

E *Enforcing Authority:* A representative of an agency or an organization that promulgates and/or enforces standards.

I *Insurance:* A representative of an insurance company, broker, agent, bureau, or inspection agency.

C *Consumer:* A person who is, or represents, the ultimate purchaser of a product, system, or service affected by the standard, but who is not included in the *User* classification.

SE *Special Expert:* A person not representing any of the previous classifications, but who has a special expertise in the scope of the standard or portion thereof.

NOTES;
1. "Standard" connotes code, standard, recommended practice, or guide.
2. A representative includes an employee.
3. While these classifications will be used by the Standards Council to achieve a balance for Technical Committees, the Standards Council may determine that new classifications of members or unique interests need representation in order to foster the best possible committee deliberations on any project. In this connection, the Standards Council may make appointments as it deems appropriate in the public interest, such as the classification of "Utilities" in the National Electrical Code Committee.
4. Representatives of subsidiaries of any group are generally considered to have the same classification as the parent organization.

Copyright National Fire Protection Association
Provided by IHS under license with NFPA
No reproduction or networking permitted without license from IHS
Not for Resale

NFPA Technical Committee Document Proposal Form

NOTE: All Proposals must be received by 5:00 pm EST/EDST on the published Proposal Closing Date.

For further information on the standards-making process, please contact the Codes and Standards Administration at 617-984-7249 or visit www.nfpa.org/codes.

For technical assistance, please call NFPA at 1-800-344-3555.

FOR OFFICE USE ONLY

Log #:

Date Rec'd:

Please indicate in which format you wish to receive your ROP/ROC ☐ **electronic** ☐ **paper** ☒ **download**
(Note: If choosing the download option, you must view the ROP/ROC from our website; no copy will be sent to you.)

Date April 1, 200X **Name** John J. Doe **Tel. No.** 716-555-1234

Company Air Canada Pilot's Association

Street Address 123 Summer Street Lane **City** Lewiston **State** NY **Zip** 14092

Please indicate organization represented (if any)

1. (a) NFPA Document Title National Fuel Gas Code **NFPA No. & Year** 54, 200X Edition

(b) Section/Paragraph 3.3

2. Proposal Recommends (check one): ☐ new text ☒ revised text ☐ deleted text

3. Proposal (include proposed new or revised wording, or identification of wording to be deleted): [Note: Proposed text should be in legislative format; i.e., use underscore to denote wording to be inserted (inserted wording) and strike-through to denote wording to be deleted (~~deleted wording~~).]

Revise definition of effective ground-fault current path to read:

3.3.78 Effective Ground-Fault Current Path. An intentionally constructed, permanent, low impedance electrically conductive path designed and intended to carry ~~underground~~ electric fault current ~~conditions~~ from the point of a ground fault on a wiring system to the electrical supply source.

4. Statement of Problem and Substantiation for Proposal: (Note: State the problem that would be resolved by your recommendation; give the specific reason for your Proposal, including copies of tests, research papers, fire experience, etc. If more than 200 words, it may be abstracted for publication.)

Change uses proper electrical terms.

5. Copyright Assignment

(a) ☐ **I am the author of the text or other material (such as illustrations, graphs) proposed in this Proposal.**

(b) ☒ **Some or all of the text or other material proposed in this Proposal was not authored by me. Its source is as follows** (please identify which material and provide complete information on its source)**:**

ABC Co.

I agree that any material that I author, either individually or with others, in connection with work performed by an NFPA Technical Committee shall be considered to be works made for hire for the NFPA. To the extent that I retain any rights in copyright as to such material, or as to any other material authored by me that I submit for the use of an NFPA Technical Committee in the drafting of an NFPA code, standard, or other NFPA document, I hereby grant and assign all and full rights in copyright to the NFPA. I further agree and acknowledge that I acquire no rights in any publication of the NFPA and that copyright and all rights in materials produced by NFPA Technical Committees are owned by the NFPA and that the NFPA may register copyright in its own name.

Signature (Required)

PLEASE USE SEPARATE FORM FOR EACH PROPOSAL • NFPA Fax: (617) 770-3500

Mail to: Secretary, Standards Council, National Fire Protection Association, 1 Batterymarch Park, Quincy, MA 02169-7471

1/4/2008

SAMPLE

Copyright National Fire Protection Association
Provided by IHS under license with NFPA
No reproduction or networking permitted without license from IHS
Not for Resale

NFPA Technical Committee Document Proposal Form

NOTE: All Proposals must be received by 5:00 pm EST/EDST on the published Proposal Closing Date.

For further information on the standards-making process, please contact the Codes and Standards Administration at 617-984-7249 or visit www.nfpa.org/codes.

For technical assistance, please call NFPA at 1-800-344-3555.

FOR OFFICE USE ONLY

Log #: _____

Date Rec'd: _____

Please indicate in which format you wish to receive your ROP/ROC ☐ electronic ☐ paper ☐ download
(Note: If choosing the download option, you must view the ROP/ROC from our website; no copy will be sent to you.)

Date _____ **Name** _____ **Tel. No.** _____

Company _____

Street Address _____ **City** _____ **State** _____ **Zip** _____

Please indicate organization represented (if any) _____

1. (a) NFPA Document Title _____ **NFPA No. & Year** _____

(**b) Section/Paragraph** _____

2. Proposal Recommends (check one): ☐ new text ☐ revised text ☐ deleted text

3. Proposal (include proposed new or revised wording, or identification of wording to be deleted): [Note: Proposed text should be in legislative format; i.e., use underscore to denote wording to be inserted (inserted wording) and strike-through to denote wording to be deleted (~~deleted wording~~).]

4. Statement of Problem and Substantiation for Proposal: (Note: State the problem that would be resolved by your recommendation; give the specific reason for your Proposal, including copies of tests, research papers, fire experience, etc. If more than 200 words, it may be abstracted for publication.)

5. Copyright Assignment

(a) ☐ I am the author of the text or other material (such as illustrations, graphs) proposed in this Proposal.

(b) ☐ Some or all of the text or other material proposed in this Proposal was not authored by me. Its source is as follows (please identify which material and provide complete information on its source)**:**

_____

I agree that any material that I author, either individually or with others, in connection with work performed by an NFPA Technical Committee shall be considered to be works made for hire for the NFPA. To the extent that I retain any rights in copyright as to such material, or as to any other material authored by me that I submit for the use of an NFPA Technical Committee in the drafting of an NFPA code, standard, or other NFPA document, I hereby grant and assign all and full rights in copyright to the NFPA. I further agree and acknowledge that I acquire no rights in any publication of the NFPA and that copyright and all rights in materials produced by NFPA Technical Committees are owned by the NFPA and that the NFPA may register copyright in its own name.

Signature (Required) _____

PLEASE USE SEPARATE FORM FOR EACH PROPOSAL • NFPA Fax: (617) 770-3500

Mail to: Secretary, Standards Council, National Fire Protection Association, 1 Batterymarch Park, Quincy, MA 02169-7471

1/4/2008

--`,,```,,,,````-`-`,,`,,`,`,,`---

Copyright National Fire Protection Association
Provided by IHS under license with NFPA
No reproduction or networking permitted without license from IHS

Not for Resale