NFPA 1150

Standard on Foam Chemicals for Fires in Class A Fuels

2004 Edition

NFPA, 1 Batterymarch Park, Quincy, MA 02169-7471
An International Codes and Standards Organization

Copyright National Fire Protection Association
Provided by IHS under license with NFPA
No reproduction or networking permitted without license from IHS

Not for Resale

IMPORTANT NOTICES AND DISCLAIMERS CONCERNING NFPA DOCUMENTS

NOTICE AND DISCLAIMER OF LIABILITY CONCERNING THE USE OF NFPA DOCUMENTS

NFPA codes, standards, recommended practices, and guides, of which the document contained herein is one, are developed through a consensus standards development process approved by the American National Standards Institute. This process brings together volunteers representing varied viewpoints and interests to achieve consensus on fire and other safety issues. While the NFPA administers the process and establishes rules to promote fairness in the development of consensus, it does not independently test, evaluate, or verify the accuracy of any information or the soundness of any judgments contained in its codes and standards.

The NFPA disclaims liability for any personal injury, property or other damages of any nature whatsoever, whether special, indirect, consequential or compensatory, directly or indirectly resulting from the publication, use of, or reliance on this document. The NFPA also makes no guaranty or warranty as to the accuracy or completeness of any information published herein.

In issuing and making this document available, the NFPA is not undertaking to render professional or other services for or on behalf of any person or entity. Nor is the NFPA undertaking to perform any duty owed by any person or entity to someone else. Anyone using this document should rely on his or her own independent judgment or, as appropriate, seek the advice of a competent professional in determining the exercise of reasonable care in any given circumstances.

The NFPA has no power, nor does it undertake, to police or enforce compliance with the contents of this document. Nor does the NFPA list, certify, test or inspect products, designs, or installations for compliance with this document. Any certification or other statement of compliance with the requirements of this document shall not be attributable to the NFPA and is solely the responsibility of the certifier or maker of the statement.

Copyright National Fire Protection Association
Provided by IHS under license with NFPA
No reproduction or networking permitted without license from IHS
Not for Resale

ADDITIONAL NOTICES AND DISCLAIMERS

Updating of NFPA Documents

Users of NFPA codes, standards, recommended practices, and guides should be aware that these documents may be superseded at any time by the issuance of new editions or may be amended from time to time through the issuance of Tentative Interim Amendments. An official NFPA document at any point in time consists of the current edition of the document together with any Tentative Interim Amendments and any Errata then in effect. In order to determine whether a given document is the current edition and whether it has been amended through the issuance of Tentative Interim Amendments or corrected through the issuance of Errata, consult appropriate NFPA publications such as the National Fire Codes® Subscription Service, visit the NFPA website at www.nfpa.org, or contact the NFPA at the address listed below.

Interpretations of NFPA Documents

A statement, written or oral, that is not processed in accordance with Section 6 of the Regulations Governing Committee Projects shall not be considered the official position of NFPA or any of its Committees and shall not be considered to be, nor be relied upon as, a Formal Interpretation.

Patents

The NFPA does not take any position with respect to the validity of any patent rights asserted in connection with any items which are mentioned in or are the subject of NFPA codes, standards, recommended practices, and guides, and the NFPA disclaims liability for the infringement of any patent resulting from the use of or reliance on these documents. Users of these documents are expressly advised that determination of the validity of any such patent rights, and the risk of infringement of such rights, is entirely their own responsibility.

NFPA adheres to applicable policies of the American National Standards Institute with respect to patents. For further information contact the NFPA at the address listed below.

Law and Regulations

Users of these documents should consult applicable federal, state, and local laws and regulations. NFPA does not, by the publication of its codes, standards, recommended practices, and guides, intend to urge action that is not in compliance with applicable laws, and these documents may not be construed as doing so.

Copyrights

This document is copyrighted by the NFPA. It is made available for a wide variety of both public and private uses. These include both use, by reference, in laws and regulations, and use in private self-regulation, standardization, and the promotion of safe practices and methods. By making this document available for use and adoption by public authorities and private users, the NFPA does not waive any rights in copyright to this document.

Use of NFPA documents for regulatory purposes should be accomplished through adoption by reference. The term "adoption by reference" means the citing of title, edition, and publishing information only. Any deletions, additions, and changes desired by the adopting authority should be noted separately in the adopting instrument. In order to assist NFPA in following the uses made of its documents, adopting authorities are requested to notify the NFPA (Attention: Secretary, Standards Council) in writing of such use. For technical assistance and questions concerning adoption of NFPA documents, contact NFPA at the address below.

For Further Information

All questions or other communications relating to NFPA codes, standards, recommended practices, and guides and all requests for information on NFPA procedures governing its codes and standards development process, including information on the procedures for requesting Formal Interpretations, for proposing Tentative Interim Amendments, and for proposing revisions to NFPA documents during regular revision cycles, should be sent to NFPA headquarters, addressed to the attention of the Secretary, Standards Council, NFPA, 1 Batterymarch Park, P.O. Box 9101, Quincy, MA 02269-9101.

For more information about NFPA, visit the NFPA website at www.nfpa.org.

Copyright National Fire Protection Association
Provided by IHS under license with NFPA
No reproduction or networking permitted without license from IHS
Not for Resale

Copyright © 2004, National Fire Protection Association, All Rights Reserved

NFPA 1150

Standard on

Foam Chemicals for Fires in Class A Fuels

2004 Edition

This edition of NFPA 1150, *Standard on Foam Chemicals for Fires in Class A Fuels*, was prepared by the Technical Committee on Forest and Rural Fire Protection and acted on by NFPA at its May Association Technical Meeting held May 23–26, 2004, in Salt Lake City, UT. It was issued by the Standards Council on July 16, 2004, with an effective date of August 5, 2004, and supersedes all previous editions.

This edition of NFPA 1150 was approved as an American National Standard on August 5, 2004.

Origin and Development of NFPA 1150

The first edition of this document was issued in 1989 as NFPA 298, *Standard on Foam Chemicals for Wildland Fire Control*, in response to a perceived need for a performance standard dealing with the foam chemicals being used in controlling wildland fires. The 1994 edition was a complete revision to make the document consistent with the developing changes in Class A foam technology. The title was changed to *Standard on Fire Fighting Foam Chemicals for Class A Fuels in Rural, Suburban, and Vegetated Areas.*

In 1999, the document was again revised to reflect further advancements in technology and a greater number of Class A concentrates and delivery systems available for use. The document was renumbered as NFPA 1150, which put it within the numerical grouping of documents under the responsibility of the Technical Committee on Forest and Rural Fire Protection.

This edition is a complete revision to bring the document into conformance with the NFPA *Manual of Style*. The title has been changed to *Standard on Foam Chemicals for Fires in Class A Fuels* to recognize that these chemicals are being used not only in rural or wildland areas but in structural fire fighting and urban areas as well. The test procedures for the chemicals as well as the lists of materials tested for compatibility with the chemicals have been updated to ensure the product is consistent with the needs of fire suppression personnel who are using the chemicals to control, suppress, or prevent fires in Class A fuels.

--`,,,,,,-`-`,,`,,`,`,,`---

Copyright National Fire Protection Association
Provided by IHS under license with NFPA
No reproduction or networking permitted without license from IHS

Not for Resale

Technical Committee on Forest and Rural Fire Protection

Randall K. Bradley, *Chair*
Lawrence Livermore National Laboratory, CA [U]

John E. Bunting, *Secretary*
New Boston Fire Department, NH [U]

Lynn R. Biddison, Fire-Trol Holdings LLC, AZ [IM]
James D. Bowman, American Forest & Paper Association, WA [M]
Rep. American Forest & Paper Association
Martin P. Carrier, Carrier Business Advisory Services, Ltd., NH [U]
Rep. National Volunteer Fire Council
Philip A. Cocker, Los Angeles County Fire Department, CA [U]
Alice R. Forbes, U.S.D.A. Forest Service, CA [E]
Rep. United States Forest Service
Donald C. Freyer, Warner Robins, GA [SE]
Charles W. George, Frenchtown, MT [SE]
Curt T. Grieve, Sacramento, CA [SE]
Mitchell Hubert, Ansul Incorporated/Tyco International, WI [M]
Louis G. Jekel, Rural/Metro Fire Department, AZ [U]
Cecilia W. Johnson, U.S.D.A. Forest Service, MT [RT]
Rep. United States Forest Service
Roy A. Johnson, U.S. Department of the Interior, ID [E]
Gregory Kozey, Kochek Company, Inc., CT [M]
Dale K. Larson, Fireman's Friend Engineering, Inc., TN [M]
Daniel Madrzykowski, National Institute of Standards and Technology, MD [RT]
Nanette Lockwood McElman, Institute for Business & Home Safety, FL [I]
Rep. Institute for Business & Home Safety
William M. Neville, Jr., Neville Associates, CA [SE]
Martin J. Pabich, Underwriters Laboratories Inc., IL [RT]
Frederick S. Richards, New York Department of State, NY [E]
Rep. International Fire Marshals Association
Herbert A. Spitzer, Jr., Spitzer's Fire & Environmental Consulting, CA [SE]
Alan D. Stovall, State of California, CA [U]
Edward F. Straw, Insurance Services Office, Inc., GA [I]
Howard L. Vandersall, Lawdon Fire Services, Inc., CA [SE]
James T. Wooters, Mizelle, Hodges and Associates Inc., GA [SE]

Alternates

James A. Burns, New York Department of State, NY [E]
(Alt. to F. S. Richards)
Robert L. Crouch, Fire-Trol Holdings LLC, AZ [IM]
(Alt. to L. R. Biddison)
Sam W. Francis, American Forest & Paper Association, PA [M]
(Alt. to J. D. Bowman)
Jack K. Johnson, Alamosa Fire Department, CO [U]
(Alt. to M. P. Carrier)
Peter Matulonis, Tyco Safety Products, IL [M]
(Alt. to M. Hubert)
Emil W. Misichko, Underwriters Laboratories Inc., IL [RT]
(Alt. to M. J. Pabich)
Robert M. Swinford, U.S.D.A. Forest Service, DC [E]
(Alt. to A. R. Forbes)
William D. Walton, National Institute of Standards and Technology, MD [RT]
(Alt. to D. Madrzykowski)
Louis A. Witzeman, Scottsdale Fire Department, AZ [U]
(Alt. to L. G. Jekel)

Carl E. Peterson, NFPA Staff Liaison

This list represents the membership at the time the Committee was balloted on the final text of this edition. Since that time, changes in the membership may have occurred. A key to classifications is found at the back of the document.

NOTE: Membership on a committee shall not in and of itself constitute an endorsement of the Association or any document developed by the committee on which the member serves.

Committee Scope: This Committee shall have primary responsibility for documents on fire protection for rural, suburban, forest, grass, brush, and tundra areas. This Committee shall also have primary responsibility for documents on Class A foam and its utilization for all wildland and structural fire fighting. This excludes fixed fire protection systems.

--`,,,,,,-`-`,,`,,`,`,,`---

Copyright National Fire Protection Association
Provided by IHS under license with NFPA
No reproduction or networking permitted without license from IHS
Not for Resale

Contents

Chapter 1 Administration **1150–** 4
1.1 Scope **1150–** 4
1.2 Purpose **1150–** 4

Chapter 2 Referenced Publications **1150–** 4
2.1 General **1150–** 4
2.2 NFPA Publications **1150–** 4
2.3 Other Publications **1150–** 4

Chapter 3 Definitions **1150–** 5
3.1 General **1150–** 5
3.2 NFPA Official Definitions **1150–** 5
3.3 General Definitions **1150–** 5

Chapter 4 Characteristics and Acceptance Requirements **1150–** 6
4.1 General **1150–** 6
4.2 Foam Concentrate **1150–** 6
4.3 Foam Solution **1150–** 7
4.4 Foam **1150–** 8
4.5 Labeling and Documentation **1150–** 8

Chapter 5 Test Methods **1150–** 8
5.1 Health, Safety, and Environmental Considerations **1150–** 8
5.2 Physical Properties **1150–** 8
5.3 Corrosion and Materials Compatibility **1150–**10

Annex A Explanatory Material **1150–**13

Annex B Informational References **1150–**16

Index **1150–**17

Copyright National Fire Protection Association
Provided by IHS under license with NFPA
No reproduction or networking permitted without license from IHS
Not for Resale

NFPA 1150

Standard on

Foam Chemicals for Fires in Class A Fuels

2004 Edition

IMPORTANT NOTE: This NFPA document is made available for use subject to important notices and legal disclaimers. These notices and disclaimers appear in all publications containing this document and may be found under the heading "Important Notices and Disclaimers Concerning NFPA Documents." They can also be obtained on request from NFPA or viewed at www.nfpa.org/disclaimers.

NOTICE: An asterisk (*) following the number or letter designating a paragraph indicates that explanatory material on the paragraph can be found in Annex A.

A reference in brackets [ ] following a section or paragraph indicates material that has been extracted from another NFPA document. As an aid to the user, the complete title and edition of the source documents for mandatory extracts are given in Chapter 2 and those for nonmandatory extracts are given in Annex B. Editorial changes to extracted material consist of revising references to an appropriate division in this document or the inclusion of the document number with the division number when the reference is to the original document. Requests for interpretations or revisions of extracted text shall be sent to the technical committee responsible for the source document.

Information on referenced publications can be found in Chapter 2 and Annex B.

Chapter 1 Administration

1.1* Scope. This standard specifies requirements for foam and the chemicals used to produce foam that is used to control, suppress, or prevent fires in Class A fuels.

1.2* Purpose.

1.2.1 The purpose of this standard is to define the acceptance requirements and test methods for fire-fighting foam chemicals that are used to control, suppress, or prevent fires in Class A fuels.

1.2.2 Acceptance requirements shall not be deemed as establishing performance levels in actual fire-fighting situations.

Chapter 2 Referenced Publications

2.1 General. The documents or portions thereof listed in this chapter are referenced within this standard and shall be considered part of the requirements of this document.

2.2 NFPA Publications. (Reserved)

2.3 Other Publications.

2.3.1 ASTM Publications. American Society for Testing and Materials, 100 Barr Harbor Drive, West Conshohocken, PA 19428-2959.

ASTM D 92, *Standard Test Method for Flash and Fire Points by Cleveland Open Cup Tester*, 2002.

ASTM D 97, *Standard Test Method for Pour Point of Petroleum Products*, 2002.

ASTM D 1331, *Standard Test Methods for Surface and Interfacial Tension of Solutions of Surface-Active Agents*, 2001.

ASTM D 2281, *Standard Test Method for Evaluation of Wetting Agents by the Skein Test*, 1997.

ASTM D 4976, *Standard Specification for Polyethylene Plastics Molding and Extrusion Materials*, 2002.

ASTM E 3, *Standard Practice for Preparation of Metallographic Specimens*, 2001.

ASTM E 407, *Standard Practice of Microetching Metals and Alloys*, 1999.

ASTM E 729, *Standard Guide for Conducting Acute Toxicity Tests on Test Materials with Fishes, Macroinvertebrates, and Amphibians*, 1996.

2.3.2 ISO Publication. International Standards Organization, 1 rue de Varembé, Case Postale 56, CH-1211, Genève 20, Switzerland.

ISO 304, *Surface Active Agents—Determination of Surface Tension by Drawing Up Liquid Films*, 2nd edition, 1985.

2.3.3 NACE Publication. NACE International, 1440 South Creek Drive, Houston, TX 77084-4906.

NACE TM0169, *Standard Test Method — Laboratory Corrosion Testing of Metals*, 2000.

2.3.4 OECD Publication. Organization for Economic Cooperation and Development, 2, rue André-Pascal, 75775 Paris Cedex 16, France.

OECD Principles of Good Laboratory Practice, Annex 2, C(89) 87(Final).

2.3.5 SAE Publications. Society of Automotive Engineers, 400 Commonwealth Drive, Warrendale, PA 15096.

AMS-3208, *Chloroprene (Cr) Rubber, Weather Resistant, 45-55*, November 1998.

AMS-C-9084, *Cloth, Glass, Finished for Resin Laminates*, June 1999.

AMS-DTL-23053/5, *Insulation Sleeving, Electrical, Heat Shrinkable, Polyolefin, Flexible Crosslinked*, July 1999.

AMS-S-8802, *Sealing Compound, Temperature Resistant, Integral Fuel Tanks and Fuel Cell Cavities, High Adhesion*, January 2003.

2.3.6 U.S. EPA Publications. Environmental Protection Agency, National Service Center for Environmental Publications (NSCEP), P.O. Box 42419, Cincinnati, OH 45242. Also available at http://www.epa.gov/ncepihom/nepishom/.

OPPTS 835.3110, *Ready Biodegradability,* Section M, CO_2 Evolution (Modified Sturm), Test, Fate, Transport and Transformation Test Guidelines, January 1998.

OPPTS 850.1075, *Fish Acute Toxicity Test, Freshwater and Marine*, Ecological Effects Test Guidelines, April 1996.

OPPTS 870.1100, *Acute Oral Toxicity*, Health Effects Test Guidelines, August 1998.

OPPTS 870.1200, *Acute Dermal Toxicity*, Health Effects Test Guidelines, August 1998.

OPPTS 870.1300, *Acute Inhalation Toxicity*, Health Effects Test Guidelines, August 1998.

--`,,,,,,-`-`,,`,,`,`,,`---

Copyright National Fire Protection Association
Provided by IHS under license with NFPA
No reproduction or networking permitted without license from IHS

Not for Resale

OPPTS 870.2400, *Acute Eye Irritation*, Health Effects Test Guidelines, August 1998.

OPPTS 870.2500, *Acute Dermal Irritation*, Health Effects Test Guidelines, August 1998.

2.3.7 U.S. Government Publications. U.S. Government Printing Office, Washington, DC 20402.

Title 40, Code of Federal Regulations, Part 160, "Good Laboratory Practice Standards."

Title 40, Code of Federal Regulations, Part 792, "Good Laboratory Practice Standards."

Title 49, Code of Federal Regulations, Part 178, Subpart L — "Non-bulk Performance-Oriented Packaging Standards" and Subpart M — "Testing of Non-bulk Packagings and Packages."

Federal Test Standard No. 601, Methods 3021 and 3025 (April 12, 1985).

2.3.8 U.S. Military Specifications. Standardization Documents Order Desk, Building 4D, 700 Robbins Ave., Philadelphia, PA 19111-5094. Also available at http://stinet.dtic.mil/ .

MIL-A-A-55859A, *Tube, Nonmetallic; Polyvinyl Chloride (PVC) Flexible (General Use)*, October 31, 2002.

MIL-PRF-81733D, *Sealing and Coating Compound, Corrosion Inhibitive*, May 15, 1998.

Chapter 3 Definitions

3.1 General. The definitions contained in this chapter shall apply to the terms used in this standard. Where terms are not included, common usage of the terms shall apply.

3.2 NFPA Official Definitions.

3.2.1* Authority Having Jurisdiction (AHJ). An organization, office, or individual responsible for enforcing the requirements of a code or standard, or for approving equipment, materials, an installation, or a procedure.

3.2.2 Shall. Indicates a mandatory requirement.

3.2.3 Should. Indicates a recommendation or that which is advised but not required.

3.2.4 Standard. A document, the main text of which contains only mandatory provisions using the word "shall" to indicate requirements and which is in a form generally suitable for mandatory reference by another standard or code or for adoption into law. Nonmandatory provisions shall be located in an appendix or annex, footnote, or fine-print note and are not to be considered a part of the requirements of a standard.

3.3 General Definitions.

3.3.1 Artificial Sea Water. A solution that consists of 1.10 percent magnesium chloride hexahydrate, 0.16 percent calcium chloride dihydrate, 0.40 percent anhydrous sodium sulfate, 2.50 percent sodium chloride, and 95.84 percent deionized or distilled water.

3.3.2 Biodegradability. A measure of the decomposition of organic matter through the action of microorganisms.

3.3.3 Class A Foam. Foam for use on fires in Class A fuels.

3.3.4 Class A Fuel. Materials such as vegetation, wood, cloth, paper, rubber, and some plastics in which combustion can occur at or below the surface of the material.

3.3.5 Drain Time. The time that it takes for a specified percent (customarily 25 percent) of the total solution that is contained in the foam to revert to liquid and drain out of the bubble structure.

3.3.6 Expansion Ratio. The ratio of the volume of the foam in its aerated state to the original volume of the non-aerated foam solution.

3.3.7 Fixed Tank. A tank that is internal to or attached directly to a helicopter.

3.3.8 Flash Point. The minimum temperature of a liquid at which it gives off vapor sufficient to form an ignitible mixture with air near the surface of the liquid under specified environmental conditions.

3.3.9 Foam. An aggregation of bubbles lighter than water created by forcing or entraining air into a foam solution by means of suitably designed equipment or by cascading it through the air.

3.3.10 Foam Chemicals. A generic name for the liquid foam concentrate, foam solution, and foam in whatever form it is being used.

3.3.11* Foam Concentrate. The foaming agent as received from the supplier that, when mixed with water, becomes foam solution.

3.3.12 Foam Solution. A homogeneous mixture of foam concentrate and water in the mix ratio required to meet the needs of the user.

3.3.13 Fresh Water. Deionized or distilled water to which 140 ppm of calcium chloride has been added.

3.3.14 Intergranular Corrosion. A corrosive attack on metal at the grain boundary.

3.3.15 LC_{50} (Lethal Concentration$_{50}$). The concentration of agent in water, usually expressed as milligrams of agent in a liter or solution, that results in the death of 50 percent of the aquatic test specimens within a specified time frame.

3.3.16 LD_{50} (Lethal Dosage$_{50}$). The dosage of a chemical, usually expressed as milligrams of the chemical per kilogram of body weight of the test animal, at which 50 percent of the test animals die within a specified time frame.

3.3.17* Material Safety Data Sheet (MSDS). A form, provided by manufacturers and compounders (blenders) of chemicals, containing information about chemical composition, physical and chemical properties, health and safety hazards, emergency response, and waste disposal of the material. [**472**:3.3]

3.3.18 Miscibility. The property of being capable of mixing in any ratio without separation into phases.

3.3.19 Mix Ratio. The proportion of foam concentrate in the foam solution, expressed as a volume percentage.

3.3.20 Surface Tension. The elastic-like force at the surface of a liquid, which tends to minimize the surface area, causing drops to form.

3.3.21 Uniform Corrosion. Removal of metal by chemical means over the entire surface.

3.3.22 Viscosity. A measure of the resistance of a liquid to flow.

3.3.23 Wetting Ability. The ability of foam solution to penetrate and soak into a solid.

--`,,,,,,`-`-,,`,,`,`,,`---
Copyright National Fire Protection Association
Provided by IHS under license with NFPA
No reproduction or networking permitted without license from IHS
Not for Resale

Chapter 4 Characteristics and Acceptance Requirements

4.1 General.

4.1.1* The characteristics, requirements, and handling of Class A foam concentrates, foam solutions, and foam shall be in accordance with this chapter.

4.1.2 All testing required by this standard shall be conducted by an independent laboratory that is certified as adhering to good laboratory practice standards as defined in 40 CFR 792, "Good Laboratory Practice Standards," 40 CFR 160, "Good Laboratory Practice Standards," or *OECD Principles of Good Laboratory Practice*.

4.1.3 Either six 20-liter or six 5-gallon sealed containers of foam concentrate taken from a single production lot shall be used for the purpose of evaluating the foam concentrate properties and requirements of this standard.

4.1.3.1 The test product shall be identified by lot number and production date.

4.1.3.2 Three of the containers shall be used for the stability test required in 4.2.2.1.

4.1.3.3 Three containers shall be used for evaluating the other properties and requirements of this standard.

4.2 Foam Concentrate.

4.2.1* Health, Safety, and Environmental Considerations.

4.2.1.1 Mammalian Toxicity. The foam concentrate shall not exceed the toxicity limits defined in Table 4.2.1.1 when tested in accordance with 5.1.1.

4.2.1.1.1 If the acute oral toxicity of the concentrate is less than or equal to 500 mg/kg, the acute inhalation toxicity test shall be performed in accordance with 5.1.1.2. An LC_{50} > 2.0 mg/L shall be acceptable.

4.2.1.1.2 If the acute dermal toxicity of the concentrate is less than or equal to 1000 mg/kg, the acute inhalation toxicity test shall be performed in accordance with 5.1.1.2. An LC_{50} > 2.0 mg/L shall be acceptable.

4.2.1.2 Aquatic Toxicity. The LC_{50} of the foam concentrate shall be greater than 10 mg/L when tested in accordance with 5.1.2.

4.2.1.3 Biodegradability. The foam concentrate shall have a minimum of 60 percent biodegradation within 42 days when tested in accordance with 5.1.3.

4.2.1.4 Flash Point. The foam concentrate shall not exhibit a flash point below 60°C (140°F) when tested in accordance with 5.1.4.

4.2.2 Physical Properties.

4.2.2.1* Stability.

4.2.2.1.1 The foam concentrate shall not be stratified, crystallized, or otherwise separated when tested in accordance with 5.2.1.

4.2.2.1.2 The expansion ratio and drain time, as determined in accordance with 5.2.7, shall differ by no more than ±15 percent expansion ratio or ±2 minutes drain time when compared with the expansion ratio and drain time from fresh concentrate determined by Section 4.4.

4.2.2.2 Viscosity. The viscosity of the concentrate at temperatures of 2°C ± 1°C (35°F ± 2°F), 21°C ± 1°C (70°F ± 2°F), and 49°C ± 1°C (120°F ± 2°F) shall be measured as described in 5.2.2, and the viscosity values obtained shall be reported on the product data sheet.

4.2.2.3* Miscibility.

4.2.2.3.1 The foam concentrate shall be miscible in water at 21°C ± 1°C (70°F ± 2°F) when tested in accordance with 5.2.3, and the results shall be reported on the product data sheet.

4.2.2.3.2 The foam concentrate miscibility in water at 4°C ± 1°C (40°F ± 2°F) shall be determined in accordance with 5.2.3 and shall be reported on the product data sheet.

4.2.2.4* Pour Point. The pour point of the concentrate, when determined in accordance with 5.2.4, shall be less than 2°C (35°F) and shall be reported on the product data sheet.

Table 4.2.1.1 Toxicity Limits for Class A Foam Concentrates and Solutions

	Acute Oral Toxicity	Acute Dermal Toxicity	Primary Dermal Irritation	Primary Eye Irritation	
				Unwashed Eyes	Washed Eyes
Foam concentrate	LD_{50} > 500 mg/kg	LD_{50} > 2000 mg/kg	Primary irritation score: < 5.0	Mildly irritating or less	Mildly irritating or less
	If LD_{50} ≥50 but ≤500, recommend protective gear and safe handling procedures	If LD_{50} ≥200 but ≤2000, recommend protective gear and safe handling procedures	If more irritating, recommend protective gear and safe handling procedures	If more irritating, recommend protective gear and safe handling procedures	If more irritating, recommend protective gear and safe handling procedures
	LD_{50} < 50 is not acceptable.	LD_{50} < 200 is not acceptable.			
Foam solution	LD_{50} > 5000 mg/kg	LD_{50} > 2000 mg/kg	Primary irritation score: < 5.0	Mildly irritating or less	Mildly irritating or less

Copyright National Fire Protection Association
Provided by IHS under license with NFPA
No reproduction or networking permitted without license from IHS
Not for Resale

4.2.3* Corrosion and Materials Compatibility.

4.2.3.1* Uniform Corrosion. The foam concentrate shall not exhibit values that exceed those specified in Table 4.2.3.1 when tested in accordance with 5.3.1.

4.2.3.2* Compatibility with Nonmetallic Materials.

4.2.3.2.1 The effects of foam concentrate on the hardness and volume of the nonmetallic materials listed in 4.2.3.2.2 shall be tested in accordance with 5.3.3.

4.2.3.2.2 The following nonmetallic materials shall be subject to testing:

(1) PVC plastic, MIL-A-A-55859A, *Tube, Nonmetallic; Polyvinyl Chloride (PVC) Flexible (General Use)*
(2) Sealant, AMS-S-8802, *Sealing Compound, Temperature Resistant, Integral Fuel Tanks and Fuel Cell Cavities, High Adhesion*
(3) Sealant, MIL-PRF-81733D, *Sealing and Coating Compound, Corrosion Inhibitive*
(4) Neoprene rubber, AMS-3208, *Chloroprene (Cr) Rubber, Weather Resistant*, 45-55
(5) Fiberglass, AMS-C-9084, *Cloth, Glass, Finished for Resin Laminates*
(6) High-density polyethylene, ASTM D 4976, *Standard Specification for Polyethylene Plastics Molding and Extrusion Materials*
(7) Flexible polyolefin, AMS-DTL-23053/5, *Insulation Sleeving, Electrical, Heat Shrinkable, Polyolefin, Flexible Crosslinked*

4.2.3.2.3 The hardness of the test piece shall not decrease by more than 10 percent or increase by more than 20 percent and shall be reported on the product data sheet.

4.2.3.2.4 The volume of the test piece shall not change by more than ±0.5 cm^3 and shall be reported on the product data sheet.

4.2.4 Packaging.

4.2.4.1 The packaging of foam concentrates shall conform with regulations that govern the ground and air transport of materials.

4.2.4.2 Containers shall meet the packaging criteria that are established by 49 CFR 178, Subpart L — "Non-bulk Performance-Oriented Packaging Standards" and Subpart M — "Testing of Non-bulk Packagings and Packages."

4.3 Foam Solution.

4.3.1* Foam solution shall be tested within the range of 0.1 to 1.0 percent, as specified in Section 4.3.

4.3.2 Health, Safety, and Environmental Concerns.

4.3.2.1 Mammalian Toxicity. A 1.0 percent foam solution shall not exceed the toxicity limits specified in Table 4.2.1.1 when tested in accordance with 5.1.1.

4.3.2.2 Documentation. On request, the manufacturer shall provide a summary of the results of toxicity testing as described in Section 5.1.

4.3.3* Physical Properties.

4.3.3.1 Surface Tension. Surface-tension values of foam solutions at 0.1 percent, 0.3 percent, and 1.0 percent concentrations shall be measured in accordance with 5.2.5 and shall be reported on the product data sheet.

4.3.3.2* Wetting Ability. The wetting ability of a 0.1 percent, a 0.3 percent, and a 1.0 percent foam solution shall be determined in accordance with 5.2.6 and shall be reported on the product data sheet.

4.3.4* Corrosion and Materials Compatibility.

4.3.4.1 Uniform Corrosion. The foam solution, at 0.1 percent and 1.0 percent concentration by volume, shall not exhibit values that exceed those specified in Table 4.2.3.1 when tested in accordance with 5.3.1.

4.3.4.2 Intergranular Corrosion. Intergranular corrosion testing shall be performed as required in 4.3.4.2.1 through 4.3.4.2.3 and the results reported on the product data sheet.

Table 4.2.3.1 Maximum Allowable Corrosion Rates

	2024-T3 Aluminum				4130 Steel				Brass (65% Cu, 35% Zn)	AZ31B Magnesium			
	Total Immersion		Partial Immersion		Total Immersion		Partial Immersion		Partial Immersion	Total Immersion		Partial Immersion	
Application	21°C (70°F)	49°C (120°F)	21°C (70°F)	49°C (120°F)	21°C (70°F)	49°C (120°F)	21°C (70°F)	49°C (120°F)	49°C (120°F)	21°C (70°F)	49°C (120°F)	21°C (70°F)	49°C (120°F)
Foam Concentrates	5.0	5.0	5.0	5.0	5.0	5.0	5.0	5.0	5.0	5.0[a]	5.0[a]	5.0[a]	5.0[a]
Foam Solutions													
Fixed-wing aircraft	5.0[b]	5.0[b]	2.0[b]	2.0[b]	5.0	5.0	5.0	5.0	5.0	—	—	—	—
Helicopter with fixed tank	5.0[b]	5.0[b]	2.0[b]	2.0[b]	5.0	5.0	5.0	5.0	5.0	2.0[b]	4.0[b]	2.0[b]	4.0[b]
Helicopter with bucket	5.0	5.0	2.0	2.0	5.0	5.0	5.0	5.0	5.0	—	—	—	—
Ground application[c]	5.0	5.0	2.0	2.0	5.0	5.0	5.0	5.0	5.0	—	—	—	—

Note: All values in milli-inches per year; 1 milli-inch = 2.54×10^{-2} millimeters.

[a] Only required if submitted for use in "helicopters equipped with fixed tanks" or if the concentrate is contained on board the helicopter.

[b] Intergranular corrosion tests also required; see 4.3.4.2.

[c] Includes fire apparatus, portable pumps, backpacks, and other such devices.

--`,,,,,,-`-`,,`,,`,`,,`---

Copyright National Fire Protection Association
Provided by IHS under license with NFPA
No reproduction or networking permitted without license from IHS
Not for Resale

4.3.4.2.1 If the foam solution is to be applied using fixed-wing aircraft, aluminum coupons that are exposed to the foam solution during uniform corrosion testing shall be examined in accordance with 5.3.2 and shall exhibit no intergranular corrosion.

4.3.4.2.2 If the foam solution is to be applied using helicopters with fixed tanks, magnesium and aluminum coupons that are exposed to the foam solution during uniform corrosion testing shall be examined in accordance with 5.3.2 and shall exhibit no intergranular corrosion.

4.3.4.2.3 If the foam solution is to be applied using ground engines or helicopters with buckets, no intergranular corrosion testing shall be required.

4.3.4.3* Compatibility with Nonmetallic Materials.

4.3.4.3.1 The effects of foam solution, at 0.1 percent and 1.0 percent concentration by volume, on the hardness and volume of the nonmetallic materials listed in 4.3.4.3.2 shall be tested in accordance with 5.3.3.

4.3.4.3.2 The following nonmetallic materials shall be subject to testing:

(1) Sealant, AMS-S-8802, *Sealing Compound, Temperature Resistant, Integral Fuel Tanks and Fuel Cell Cavities, High Adhesion*
(2) Sealant, MIL-PRF-81733D, *Sealing and Coating Compound, Corrosion Inhibitive*

4.3.4.3.3 The degree of hardness of the test piece shall not decrease by more than 10 percent or increase by more than 20 percent and shall be reported on the product data sheet.

4.3.4.3.4 The volume of the test piece shall not change by more than ±0.5 cm^3 and shall be reported on the product data sheet.

4.4 Foam.

4.4.1 Expansion Ratio. The expansion ratio of 1.0 percent foam solutions in deionized or distilled water, fresh water, and sea water shall be determined in accordance with 5.2.7 and the results reported on the product data sheet.

4.4.2 Drain Time. The 25 percent drain time of a 1.0 percent foam solution in deionized or distilled water, fresh water, and sea water shall be determined in accordance with 5.2.7 and the results reported on the product data sheet.

4.5 Labeling and Documentation.

4.5.1 Labeling. In addition to other requirements that might apply, the manufacturer shall provide the following information on a label that is permanently attached to the concentrate container:

(1) Manufacturer name and address
(2) Product name, lot number, and date of manufacture
(3) Manufacturer-recommended range of mix ratios
(4) Emergency and first-aid instructions
(5) Volume (liters and U.S. gallons) of concentrate in container
(6) Statement that product meets all requirements of NFPA 1150 (2004 edition)
(7) Statement directing attention of user to product data sheet

4.5.2 Documentation.

4.5.2.1 A product data sheet that contains the information identified in this standard shall be prepared by the manufacturer.

4.5.2.2 On request, the manufacturer shall provide a product data sheet that documents the results of the tests required by this standard, and a copy of a current MSDS.

Chapter 5 Test Methods

5.1 Health, Safety, and Environmental Considerations.

5.1.1 Mammalian Toxicity.

5.1.1.1 The foam concentrate and a 1.0 percent by volume foam solution shall be tested in accordance with the following U.S. EPA Office of Prevention, Pesticides and Toxic Substances Guidelines:

(1) Health Effects Test Guidelines, OPPTS 870.1100, *Acute Oral Toxicity*
(2) Health Effects Test Guidelines, OPPTS 870.1200, *Acute Dermal Toxicity*
(3) Health Effects Test Guidelines, OPPTS 870.2500, *Acute Dermal Irritation*
(4) Health Effects Test Guidelines, OPPTS 870.2400, *Acute Eye Irritation*, including the optional test defined in 4(iii) of the Guideline

5.1.1.2 If it is necessary to run the acute inhalation toxicity test, it shall be run in accordance with the U.S. EPA Office of Prevention, Pesticides and Toxic Substances Health Effects Test Guidelines, OPPTS 870.1300, *Acute Inhalation Toxicity.*

5.1.2 Aquatic Toxicity.

5.1.2.1 Foam concentrate samples shall be tested, using rainbow trout *(Oncorhynchus mykiss)*, in accordance with U.S. EPA Office of Prevention, Pesticides and Toxic Substances, Ecological Effects Test Guidelines, OPPTS 850.1075, *Fish Acute Toxicity Test, Freshwater and Marine*, in soft water as defined in ASTM E 729, *Standard Guide for Conducting Acute Toxicity Tests on Test Materials with Fishes, Macroinvertebrates, and Amphibians.*

5.1.2.2 In accordance with OPPTS 850.1075, 10 fish that are 60 days ± 15 days post-hatch shall be exposed under static conditions to each level of a foam solution that contains soft water for 96 hours at 12°C ± 1°C (54°F ± 2°F).

5.1.3* Biodegradability.

5.1.3.1 The biodegradability of the foam concentrate shall be determined in accordance with U.S. EPA Office of Prevention, Pesticides and Toxic Substances, *Fate, Transport, and Transformation Test Guidelines*, OPPTS 835.3110, *Ready Biodegradability*, Section M, CO_2 Evolution (Modified Sturm) Test.

5.1.3.2 Testing shall be conducted for a minimum of 28 days and shall be continued until an oxygen depletion plateau is reached.

5.1.3.3 Testing shall be discontinued at the end of 42 days, even if the plateau has not been reached.

5.1.3.4 At least one reference substance shall be used to monitor inoculum activity.

5.1.4 Flash Point. The open-cup flash point shall be determined in accordance with ASTM D 92, *Standard Test Method for Flash and Fire Points by Cleveland Open Cup Tester.*

5.2 Physical Properties.

5.2.1 Stability of Concentrate.

5.2.1.1 Three 20 L or 5 gal containers of foam concentrate that are taken from a single production lot and packaged in

Copyright National Fire Protection Association
Provided by IHS under license with NFPA
No reproduction or networking permitted without license from IHS
Not for Resale

sealed containers, as received from the manufacturer, shall be marked, handled, stored, and tested as described in 5.2.1.2 through 5.2.1.7.

5.2.1.2 The containers shall be designated as Samples 1, 2, and 3.

5.2.1.3 The contents of the containers shall not be agitated, mixed, or otherwise disturbed, except as required to complete the testing, until the temperature storage sequence is completed.

5.2.1.4 Sample 1 shall be tested in accordance with 5.2.1.7 after it has been stored for 37 continuous days under the following conditions in the following sequence:

(1) 49°C ± 3°C (120°F ± 5°F) for 30 days
(2) 21°C ± 3°C (70°F ± 5°F) for 7 days

5.2.1.5 Sample 2 shall be tested in accordance with 5.2.1.7 after it has been stored for 68 continuous days under the following conditions in the following sequence:

(1) 49°C ± 3°C (120°F ± 5°F) for 30 days
(2) 21°C ± 3°C (70°F ± 5°F) for 1 day
(3) –9°C ± 3°C (15°F ± 5°F) for 30 days
(4) 21°C ± 3°C (70°F ± 5°F) for 7 days

5.2.1.6 Sample 3 shall be tested in accordance with 5.2.1.7 after it has been stored for 37 continuous days under the following conditions in the following sequence:

(1) –9°C ± 3°C (15°F ± 5°F) for 30 days
(2) 21°C ± 3°C (70°F ± 5°F) for 7 days

5.2.1.7 Within one day following the end of the storage periods described in 5.2.1.4 through 5.2.1.6, the sealed sample containers shall be inverted four times within a 1-minute period.

5.2.1.7.1 Each sample shall then be opened, and the foam concentrate shall be poured into separate, clean, open-head transparent containers and allowed to sit undisturbed for 10 minutes to allow bubbles to rise to the surface.

5.2.1.7.2 The samples shall then be visually examined for separation, stratification, and crystallization.

5.2.1.7.3 The empty storage container also shall be examined for evidence of residual sediment or crystals.

5.2.1.7.4 The expansion ratio and the drain time of solutions prepared from each sample of the concentrate shall be determined in accordance with the procedure in 5.2.7 and shall be compared with the expansion ratio and the drain time obtained with the original sample.

5.2.1.7.5 The wetting ability of freshly prepared solutions from each stored concentrate shall be determined in accordance with the procedure in 5.2.6.

5.2.2 Viscosity. The viscosity of the foam concentrate shall be measured at the temperatures of 2°C (35°F), 21°C (70°F), and 49°C (120°F) according to the following:

(1)*A Brookfield viscometer, model LVT or LVF, or the equivalent, set at 60 rpm with the appropriate spindle (No. 2 for viscosities from 1 to 500 centipoise and No. 4 for viscosities greater than 500 centipoise), shall be used to measure the viscosity.
(2) A straight-sided glass beaker that contains approximately 800 mL of the test sample shall be positioned under the viscometer.
(3) The spindle shall be immersed in the concentrate to the indicated depth.
(4) The viscometer then shall be turned on, and the spindle shall be allowed to rotate for 1 minute prior to taking the measurement.
(5) Triplicate measurements shall be made, stirring gently between each measurement, and the viscosity of the sample shall be calculated in centipoise, using the applicable multiplier (5 for spindle No. 2 and 100 for spindle No. 4).

5.2.3 Miscibility.

5.2.3.1 The temperature combinations of foam concentrate and water shown in Table 5.2.3.1 shall be tested in accordance with the test method described in 5.2.3.2 using foam concentrate mixed into deionized or distilled water.

Table 5.2.3.1 Temperature Combinations of Foam Concentrate and Water for Miscibility Testing

Water Temperature		Foam Concentrate Temperature	
°C	°F	°C	°F
4 ± 1	40 ± 2	21 ± 1	70 ± 2
21 ± 1	70 ± 2	21 ± 1	70 ± 2
4 ± 1	40 ± 2	4 ± 1	40 ± 2
21 ± 1	70 ± 2	4 ± 1	40 ± 2

5.2.3.2 The miscibility of the foam concentrate shall be measured according to the following procedures:

(1) Five hundred (500) mL of deionized or distilled water at the test temperature shall be added to a 1 L glass beaker.
(2) A stirrer, as illustrated in Figure 5.2.3.2, shall be inserted into the water to the depth shown in the figure.
(3) The speed of the stirrer motor shall be adjusted to 60 rpm ± 10 rpm.
(4) The required amount of foam concentrate (1.5 mL for a 0.3 percent foam solution and 5.0 mL for a 1.0 percent foam solution) shall be added over 2 seconds.
(5) After 10 revolutions of the stirrer, rotation shall be stopped and the liquid mixture shall be observed.
(6) If the foam solution is not visually homogeneous, it shall be stirred for an additional 10 revolutions.
(7) The procedure shall be repeated until the foam solution is visually homogeneous or until the total number of revolutions is equal to 100.
(8) The observations made at each 10-revolution interval shall be recorded.
(9) If the foam solution is not visually homogeneous after 100 revolutions, the result shall be recorded as not miscible.

5.2.4 Pour Point. The pour point of the foam concentrate shall be measured in accordance with ASTM D 97, *Standard Test Method for Pour Point of Petroleum Products.*

5.2.5 Surface Tension.

5.2.5.1 Foam solutions (0.1 percent, 0.3 percent, and 1.0 percent by volume) shall be prepared with 21°C ± 3°C (70°F ± 5°F) deionized or distilled water.

5.2.5.2 The surface tension of each sample shall be determined in accordance with ASTM D 1331, *Standard Test Methods for Surface and Interfacial Tension of Solutions of Surface-Active Agents,* or ISO 304, *Surface Active Agents — Determination of Surface Tension by Drawing Up Liquid Films.*

Copyright National Fire Protection Association
Provided by IHS under license with NFPA
No reproduction or networking permitted without license from IHS
Not for Resale

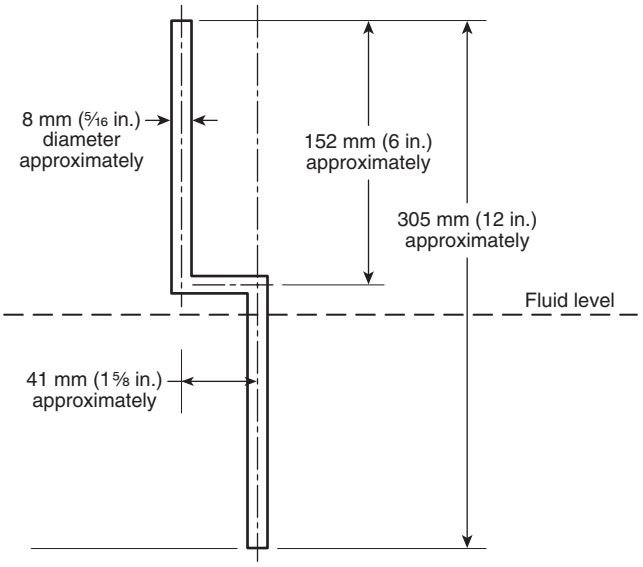

FIGURE 5.2.3.2 Stirrer Shaft for Miscibility Test.

5.2.6 Wetting Ability.

5.2.6.1 Three freshly prepared samples each of 0.1 percent, 0.3 percent, and 1.0 percent by volume foam solution shall be prepared with deionized or distilled water.

5.2.6.2 The ability of each sample to wet a cotton skein shall be determined in accordance with ASTM D 2281, *Standard Test Method for Evaluation of Wetting Agents by the Skein Test*, except the test shall be modified as required by the following:

(1) A 1.50 g S-hook shall be used.
(2) The weight of each test skein shall be corrected to 5.00 g.
(3) The time it takes for the skein to sink when immersed in the test solution shall be measured to the nearest second.

5.2.6.3 The average value of the replicate tests shall be reported.

5.2.7* Foam Expansion Ratio and Drain Time.

5.2.7.1* Test Method. The foaming ability of 1.0 percent foam solutions that are prepared with fresh water, deionized or distilled water, and artificial seawater shall be determined in accordance with the following:

(1) Ten (10) mL of foam solution shall be placed in a 100 mL stoppered, graduated cylinder having 1.0 mL graduations between the 0 and 10 mL marks.
(2) The cylinder shall be shaken forcefully until all the liquid is incorporated in the foam structure.
(3) Immediately after shaking is ceased, a stopwatch shall be started, and the volume of foam and the volume of solution in the cylinder recorded.
(4) The volume of drained solution in the bottom of the cylinder shall be recorded at 1-minute intervals for 5 minutes and then after 10 minutes and 15 minutes or until such time that 2.5 mL of foam solution has drained from the foam.
(5) The foam expansion ratio shall be calculated by dividing the volume of foam recorded in 5.2.7.1(3) by 10.
(6) The 25 percent drain time shall be determined by subtracting the volume of solution recorded in 5.2.7.1(3) from the volume of drained solution recorded at each time interval in 5.2.7.1(4) and extrapolating the data to determine the time when 2.5 mL of solution has drained from the foam.
(7) The test shall be repeated at least three times using fresh foam solution for each test.
(8) The average of all expansion ratio values and the average of all drain time values shall be calculated and reported.

5.3 Corrosion and Materials Compatibility.

5.3.1 Uniform Corrosion Test. The foam concentrate and foam solution shall be tested for uniform corrosion.

5.3.1.1 Three coupons each of 2024-T3 aluminum and 4130 steel shall be tested to the conditions specified in 5.3.1.4.

5.3.1.2 Three coupons of brass (65 percent Cu and 35 percent Zn) shall be tested to the conditions specified in 5.3.1.4(4).

5.3.1.3 If the foam concentrate or foam solution is used in helicopters equipped with fixed tanks or if the concentrate is contained on board the helicopter, three coupons of AZ31B magnesium shall be tested to the conditions specified in 5.3.1.4.

5.3.1.4 The following condition(s) shall be tested as required by 5.3.1.1 through 5.3.1.3:

(1) Total immersion at 21°C ± 2°C (70°F ± 3°F)
(2) Total immersion at 49°C ± 2°C (120°F ± 3°F)
(3) Partial immersion at 21°C ± 2°C (70°F ± 3°F)
(4) Partial immersion at 49°C ± 2°C (120°F ± 3°F)

5.3.1.5* Each coupon shall have a nominal size as shown in either of the following and shall be engraved with a unique identification code:

(1) The coupon shall be 1 in. × 4 in. × ⅛ in. with a 5⁄16 in. hole located ½ in. from one end and centered from each side as shown in Figure 5.3.1.5.
(2) The coupon shall be 25 mm × 102 mm × 3 mm with an 8 mm hole located 12.5 mm from one end and centered from each side as shown in Figure 5.3.1.5.

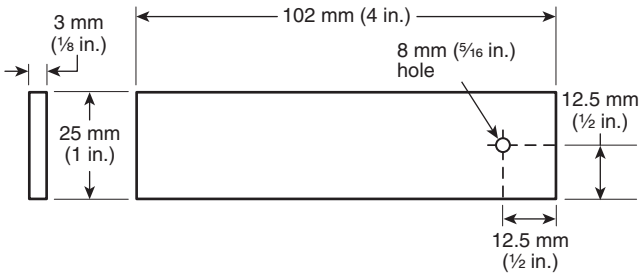

FIGURE 5.3.1.5 Test Coupon.

5.3.1.6 Each coupon shall be measured to the nearest 0.01 mm (0.0004 in.) in each of the three dimensions.

5.3.1.7 Cleaning and Conditioning.

5.3.1.7.1 Immediately prior to use, each coupon shall be degreased using an all-purpose liquid cleaner and shall be rinsed in tap water.

5.3.1.7.2 Contamination of the degreased coupon shall be avoided.

--`,,,,,,-`-`,,`,,`,`,,`---
Copyright National Fire Protection Association
Provided by IHS under license with NFPA
No reproduction or networking permitted without license from IHS
Not for Resale

5.3.1.7.3 The coupons then shall be cleaned chemically as described in Table 5.3.1.7.3, rinsed in deionized or distilled water, wiped with clean lint-free toweling, and dried at 55°C ± 3°C (130°F ± 5°F) for 15 minutes to 30 minutes.

5.3.1.7.4 After the coupons are cooled to room temperature in a desiccator, they shall be weighed to a tolerance of 0.1 mg (3.5×10^{-6} oz) and used immediately.

5.3.1.8 Test Procedure.

5.3.1.8.1 Each 1 L (32 oz) wide-mouth, straight-sided glass jar shall contain 800 mL (27 oz) of liquid for total immersion tests or 400 mL (13.5 oz) of liquid for partial immersion tests.

5.3.1.8.2 One test coupon shall be suspended in each jar in such a way that the coupon does not touch the sides or bottom of the jar, using a length of braided 8 kg to 9 kg (18 lb to 20 lb) test Dacron fishing line.

5.3.1.8.3 For total immersion tests, the coupon shall be completely covered with liquid.

5.3.1.8.4 For partial immersion tests, the coupon shall be suspended so that one-half its length is immersed in the liquid and one-half its length is exposed to the vapor space above the liquid.

5.3.1.8.5 Each jar shall be closed with a vinyl-lined Bakelite screw cap that has been firmly hand-tightened, labeled with coupon identification and starting date, and placed in the test chamber.

5.3.1.8.6 The jars containing the test samples shall be stored undisturbed at the controlled temperatures defined in 5.3.1.4 for 90 days.

5.3.1.8.7 At the end of the 90-day test, the coupons shall be removed from the liquid and rinsed under running tap water to remove loosely attached corrosion products and test solution. If necessary, the coupons shall be scrubbed lightly with a toothbrush or other nonmetallic brush to aid in removing scale.

5.3.1.8.8 Following the procedures of 5.3.1.8.7, the coupons shall be cleaned chemically in accordance with Table 5.3.1.7.3, rinsed in deionized or distilled water, wiped with clean lint-free toweling, and dried at 55°C ± 3°C (130°F ± 5°F) for 15 minutes to 30 minutes.

5.3.1.8.9 A clean, unexposed coupon of known weight that is to serve as a control for weight loss during cleaning shall be cleaned in the same manner.

5.3.1.8.10 Following the procedures of 5.3.1.8.8 and 5.3.1.8.9, the test coupons shall be cooled to room temperature and the final weight of each coupon determined to the nearest 0.1 mg (3.5×10^{-6} oz).

5.3.1.9 Test Results.

5.3.1.9.1 The corrosion rate, *C,* in milli-inches per year (MPY), shall be calculated for each sample using the equation below, in accordance with NACE TM0169, *Standard Test Method — Laboratory Corrosion Testing of Metals.*

$$C = \frac{ML \times 534.57}{SA \times ET \times MD}$$

where:

C = corrosion rate (milli-inches per year)
ML = mass loss (mg)
SA = surface area (in.^{2})
ET = exposure time (hours)
MD = metal density (g/cm^3)

CAUTION: Be sure all measurements are converted to the units shown above prior to performing the calculation.

Table 5.3.1.7.3 Procedures for Cleaning Corrosion Coupons

Alloy	Cleaning Solution*	Immersion Time (minutes)	Solution Temperature	Remarks
Aluminum	70% HNO_3	2–3	Room temperature	Lightly scrub using nonmetallic brush or scrub pad after immersion. If the corrosion film resists cleaning with the HNO_3, alternate with 10-minute immersion in a solution that contains 2 g CrO_3 and 5 g H_3PO_4 in 93 mL of 80°C to 85°C (175°F to 185°F) deionized or distilled water.
Brass	15–20% HCl	2–3	Room temperature	Lightly scrub using nonmetallic brush or scrub pad after immersion. A rubber stopper, Scotch Brite or equivalent, nonmetallic scourer, or scrubber can be used to scrub coupons with hard or severe coating.
Steel	50 g SnCl + 20 g $SbCl_3$ in 1 L conc HCl	3–5	Ice bath	
Magnesium	15 g CrO_3 + 1 g $AgCrO_4$ in 84 mL deionized or distilled H_2O	15	Boiling water bath	

* Discard cleaning solutions when changing from one product to another and as the cleaning solutions become discolored. Use fresh chemical to clean each magnesium coupon. Exercise care to prevent cross-contamination.

Source: NACE TM0169, *Standard Test Method — Laboratory Corrosion Testing of Metals.*

Copyright National Fire Protection Association
Provided by IHS under license with NFPA
No reproduction or networking permitted without license from IHS
Not for Resale

Table 5.3.1.9.2 Alloy Densities

Alloy	Density	
	g/cm³	oz/in.³
2024-T3 aluminum	2.77	1.60
4130 steel	7.86	4.54
Brass (65% Cu, 35% Zn)	8.47	4.90
AZ31B magnesium	1.77	1.02

5.3.1.9.2 The alloy densities in Table 5.3.1.9.2 shall be used in the calculation of the corrosion rate.

5.3.1.9.3 The results of replicate tests shall be averaged and the results reported to the nearest 0.1 milli-inch per year.

5.3.2 Intergranular Corrosion Test. The foam solution shall be tested for intergranular corrosion according to the following procedures:

(1) One coupon for each immersion condition and temperature that is used in the 90-day weight loss tests on the specified alloys shall be sliced as shown in Figure 5.3.2, and mounted in accordance with ASTM E 3, *Standard Practice for Preparation of Metallographic Specimens.*
(2) The coupon shall be polished to 0.3 µm alumina finish.
(3) The aluminum coupon shall be etched with Keller's reagent; the magnesium coupon shall be etched with Nital reagent, in accordance with ASTM E 407, *Standard Practice of Microetching Metals and Alloys.*
(4) The coupon shall be examined at a magnification of 500× on both the transverse and longitudinal cross-sections as shown in Figure 5.3.2.

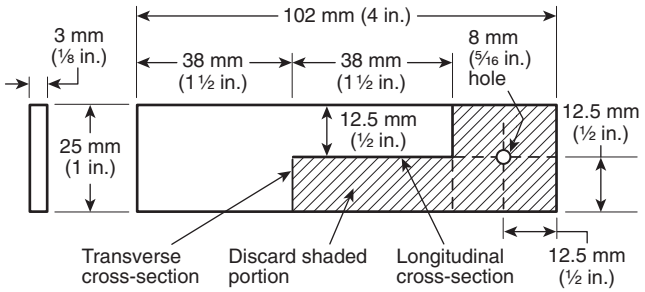

FIGURE 5.3.2 Intergranular Corrosion Coupon.

5.3.3 Nonmetallic Materials Compatibility Test.

5.3.3.1 Preparation. Unused samples of each nonmetallic material to be tested shall be cut into coupons with a nominal size of 13 mm × 76 mm × 3 mm (½ in. × 3.0 in. × ⅛ in.) and tested according to the following procedures:

(1) A wide-mouth bottle of nominal 1 L or 1 qt volume shall be used as the test container.
(2) The volume of each test coupon shall be measured as specified in 5.3.3.2.1 and shall be recorded.
(3) The hardness of each test coupon shall be measured as specified in 5.3.3.3.1 and shall be recorded.
(4) The container shall be filled with 800 mL (27 oz) of the test concentrate or test solution.
(5) Three coupons of the same test material shall be suspended in a single container such that they are totally immersed and not touching each other or the jar.
(6) The test container shall be loosely covered to minimize liquid evaporation and shall be maintained at room temperature [approximately 21°C (70°F)] during the test.
(7) The test coupons shall be immersed for 16 consecutive hours in the concentrate or solution, and then removed from the concentrate or solution (without wiping, rinsing, or drying) and suspended in the air without contact with any surface for 8 consecutive hours during each 24-hour period.
(8) During the weekends, the sample shall be permitted to remain in the solution.
(9) The immersion cycles shall be repeated until the sample has been subjected to 20 cycles.
(10) Any lost concentrate or solution shall be replenished during the test period so that the sample is totally immersed.
(11) At the end of the test period, the sample shall be removed from the liquid, rinsed with deionized or distilled water, and air dried.
(12) The change in volume and hardness of each coupon shall be determined in accordance with 5.3.3.2 and 5.3.3.3.

5.3.3.2 Volume Test.

5.3.3.2.1 The volume of each test coupon shall be calculated from the measurements of each dimension or by means of liquid displacement and shall be recorded to the nearest cubic centimeter.

5.3.3.2.2 The change in volume shall be calculated by subtracting the final value from the initial value.

5.3.3.2.3 The average volume change for the three coupons of each material shall be reported.

5.3.3.3 Hardness Test.

5.3.3.3.1 The hardness of the samples shall be determined in accordance with Federal Test Standard No. 601, Methods 3021 and 3025.

5.3.3.3.1.1 A Shore D gauge shall be used for fiberglass and high-density polyethylene.

5.3.3.3.1.2 A Shore A2 gauge shall be used for all other materials specified in 4.2.3.2.2 and 4.3.4.3.2.

5.3.3.3.2 The hardness of each sample shall be recorded.

5.3.3.3.3 The percent change in hardness shall be calculated as follows:

$$\frac{\text{initial hardness} - \text{final hardness}}{\text{initial hardness}} \times 100 = \text{percent change}$$

5.3.3.3.4 The average hardness change for the three coupons of each material shall be reported.

Copyright National Fire Protection Association
Provided by IHS under license with NFPA
No reproduction or networking permitted without license from IHS
Not for Resale

Annex A Explanatory Material

Annex A is not a part of the requirements of this NFPA document but is included for informational purposes only. This annex contains explanatory material, numbered to correspond with the applicable text paragraphs.

A.1.1 Class A foam solutions are generally used at concentrations in the range of 0.1 percent to 1.0 percent, and testing over this range of concentrations is required by this standard. However, situations may occur when either lower- or higher-strength solutions would be more effective. For example, Class A foam solutions lower than 0.1 percent concentration would, in many cases, be equally as effective as higher concentrations in wetting and penetrating into deep-seated fires. Also, concentrations higher than 1.0 percent may have benefits in some situations. See NFPA 1145, *Guide for the Use of Class A Foams in Manual Structural Fire Fighting*.

A.1.2 When evaluating health, safety, and environmental concerns of fire-fighting chemicals, there are numerous aspects that need to be considered, not all of which are addressed by the testing included in this document. To address the varied concerns of these types of products there is a need to develop fire testing.

Of particular concern with respect to these products is fire performance, which has been evaluated under various research programs. The results of such research suggest that concerns related to resistance to ignition and suppression ability of the solutions and foams need further evaluation. Research to develop reproducible testing procedures continues.

A.3.2.1 Authority Having Jurisdiction (AHJ). The phrase "authority having jurisdiction," or its acronym AHJ, is used in NFPA documents in a broad manner, since jurisdictions and approval agencies vary, as do their responsibilities. Where public safety is primary, the authority having jurisdiction may be a federal, state, local, or other regional department or individual such as a fire chief; fire marshal; chief of a fire prevention bureau, labor department, or health department; building official; electrical inspector; or others having statutory authority. For insurance purposes, an insurance inspection department, rating bureau, or other insurance company representative may be the authority having jurisdiction. In many circumstances, the property owner or his or her designated agent assumes the role of the authority having jurisdiction; at government installations, the commanding officer or departmental official may be the authority having jurisdiction.

A.3.3.11 Foam Concentrate. Class A foam concentrates, where mixed with water at concentrations in the range of 0.1 percent to 1.0 percent by volume, produce an array of foam solutions and foams. Such foam solutions and foams are used for a variety of situations that are encountered when fighting fires in Class A fuels. Fires in Class A fuels occur in an infinite number of configurations that are affected by fuel types, amounts, and geometries. Class A foam concentrates are used in applications for flame knockdown, overhaul or mop-up, and fuel pretreatment. Because of the diversity of applications, the foam solution and foam should be varied over a range of performance characteristics. Those who use foam need to be knowledgeable of and proficient in the conditions of preparation and application that are most suitable to each fire situation.

Foam solutions prepared at the lower end of their recommended concentration range can be used as wetting agents on Class A fuels. For more information, see NFPA 1145, *Guide for the Use of Class A Foams in Manual Structural Fire Fighting*.

Types of systems for producing Class A fire-fighting foam are as follows:

(1) Compressed air foam system (CAFS), from which foam is produced by injecting air or nitrogen into the foam solution ahead of the nozzle. The expansion ratio depends on mix ratio, air/foam solution ratio, and hose and nozzle selection.
(2) Air-aspirating foam nozzle from which foam is produced by entraining and mixing air with the foam solution at the nozzle. The expansion ratio depends on mix ratio, nozzle selection, and operating pressure.
(3) Conventional nozzles that are not specifically designed for the production of foam but that are able to produce foam by entraining and mixing air with the foam solution after discharge from the nozzle. The expansion ratio is generally low and depends on mix ratio and application technique.
(4) Fixed- and rotor-wing aircraft from which foam is produced by cascading foam solution through the air. The expansion ratio depends on drop speed, drop height, and mix ratio.

Referenced information on each of these foam development and application methods is provided in Annex B.

The foam bubbles and the solution that drains from them attach to and penetrate Class A fuels due to the reduced surface tension imparted to the water by the foam concentrate. The bubbles hold moisture and release it as the foam breaks down, prolonging the time the moisture is in contact with the fuel. Where applied in adequate quantities, the foam excludes air from the fuel–air interface; envelops combustible vapors; and resists disruption due to wind, heat, and flame.

A.3.3.17 Material Safety Data Sheet (MSDS). The format for a material safety data sheet varies from country to country. The manufacturer, blender, or distributor of the product should provide an MSDS in the proper format for the country they intend to serve.

A.4.1.1 Product brands and types of foam concentrate are not necessarily compatible. Tanks or containers that hold concentrate should be flushed and rinsed before adding another brand or type of concentrate. Advice from the manufacturer should be obtained before mixing different concentrates.

A.4.2.1 The handling, mixing, and application of foam concentrate should follow specific operational procedures to protect the water source and to provide safety in the workplace. Secondary containment devices such as berms should be used to isolate potential foam concentrate spills from the aquatic environment.

The following procedures should be used where Class A fire suppressant foams are mixed and applied:

(1) Fire apparatus tanks should not leak, and operators should use appropriate methods and equipment to avoid overflow spills and discharge hose spills when filling the tanks.
(2) Helicopter buckets should be filled using a closed, portable, concentrate container with a long spout, an onboard injection system, or a similar device to prevent splashes and concentrate spills.
(3) Portable tanks or sumps that are used to premix solution or to fill application vehicles should be located at least 30 m (100 ft) from bodies of water. Mixing operations should be conducted in such a manner as to avoid

Copyright National Fire Protection Association
Provided by IHS under license with NFPA
No reproduction or networking permitted without license from IHS
Not for Resale

spilling foam concentrate or foam solution. Spillage should not enter drainage systems that empty into fish habitats or waterways that flow into fish-inhabited water.

(4) Air drops from fixed-wing aircraft and fixed tank–equipped helicopters should be conducted so that foam solution does not come closer than 30 m (100 ft) to bodies of water.

Informational references on foam applications are provided in Annex B.

All personnel involved in handling, mixing, and applying foam concentrate and foam solutions should be trained in the recommended procedures that address occupational safety and health and environmental impact. All personnel should follow the manufacturer's recommendations on the product label and MSDS.

Prolonged contact with concentrate should be avoided. Showering is recommended as soon as possible after prolonged contact with concentrate. Clothing that is wetted with concentrate should be changed and washed. Soiled clothes should be cleaned daily.

Personnel who handle foam concentrate should wear protective clothing that includes eye protection and should avoid ingesting concentrate. Individuals who have ingested concentrate should be examined by a doctor as soon as possible. Skin or eyes that come in contact with concentrate should be rinsed and washed immediately. Large amounts of potable or reasonably clear water should be available on site for such purposes.

Users of Class A foam products should ensure that the following conditions are met:

(1) MSDS should be available at a location in the workplace that allows examination by the workers.
(2) Foam concentrate should not be used at a workplace unless a product label and an MSDS are provided and worker instruction and training have been completed.
(3) Labels and MSDS should be available in English or other languages as prescribed by the authority having jurisdiction.
(4) Every container in the workplace that contains foam concentrate should be labeled and should remain labeled in the prescribed manner.
(5) Prescribed safe-handling equipment should be provided, should be in proper repair, and should be used at the workplace.

Additional information on safety is included in the U.S.D.A. Forest Service's "Chemicals Used in Wildland Fire Suppression: A Risk Assessment," "Human Health Risk Assessment: Wildland Fire-Fighting Chemicals," and "Ecological Risk Assessment: Wildland Fire-Fighting Chemicals."

A.4.2.2.1 The purpose of the stability requirement is to ensure that the foam concentrate has a useful shelf life. However, because it is impractical to test every potential storage circumstance, it is possible that stability problems will occur.

Foam concentrate should be stored in sealed containers to avoid evaporation of solvents that are necessary for the stability of the concentrate. Instability of the product can result in malfunction of the proportioning and dispensing equipment.

Foam solutions should not be stored for prolonged periods of time before use. The diluted foam concentrate might degrade, resulting in reduced wetting and foaming capability.

A.4.2.2.3 Miscibility relates to the ease of mixing foam concentrate and water to form homogeneous foam solutions, that is, a foam solution that contains the desired mix ratio of components in all portions thereof and that consequently performs uniformly. Under some conditions, opalescence (turbidity) can occur when the concentrate and water are mixed. Opalescence is not necessarily related to miscibility, provided the foam solution is homogeneous. Miscibility is measured at different temperatures because the viscosity and the miscibility of the foam concentrate can be affected by both its temperature and the temperature of the water with which it is being mixed. Variations in viscosity, in turn, can affect the ability to achieve a uniform foam solution. Increasing the temperature of the concentrate prior to mixing it with water can improve its miscibility.

Foam concentrates that are miscible in the water intended for use in the preparation of foam solutions should be chosen. This is particularly important when it is either impossible or impractical to mix the foam solution immediately prior to use, or when the mixing equipment is inadequate.

A.4.2.2.4 The pour point of a liquid is the lowest temperature at which it flows. The pour point of Class A foam concentrates is measured to demonstrate the changes in the flow characteristics of the product that occur with changes in temperature. The pour point test procedure can be used to measure the impact of temperature on rate of flow. It should be recognized, however, that the rate of flow of the concentrate at the measured pour point is not necessarily adequate for use in many proportioning and transport systems. This test can be conducted easily in the field.

A.4.2.3 Foam concentrate can cause corrosion of metal surfaces. Corrosion requirements exist for several commonly used metals. Foam concentrate should be stored in its original containers. The foam manufacturer should be consulted regarding materials compatibility if the concentrate is to be stored in other than the original container.

Coatings, such as paints and galvanized surfaces, adhesives, sealants, and lubricants should be evaluated, and those that react with foam concentrate should not be used where contact between the two is likely. If nonmetallic materials are used with foam concentrate, such materials should be tested in accordance with 5.3.3.

Foam concentrate is capable of passing through openings that are too small for water. Therefore, all joints, seams, or connections that are conceivably subject to leakage (e.g., valve packing, retainers, bushings, threaded joints, and screw unions) should be carefully examined.

A.4.2.3.1 Corrosion induced by fire chemicals in ground and aerial delivery system equipment has been a problem since the beginning of wildland fire chemicals programs. The corrosive effects of fire suppression chemicals (primarily fire retardants, although studies also included a number of foams) have been tested on metals commonly used in equipment since the early 1960s. The results showed that the chemicals could be corrosive in varying degrees, from failures within a few days to only small pits after a year's time, depending on the chemical–metal combination and the type of exposures examined.

An examination of fire suppression equipment, including aircraft, after several seasons of use of a variety of chemicals led wildland fire management agencies to recommend alloys for construction of application equipment, use of protective coatings, and housekeeping practices in addition to methods of testing for new suppression chemicals. By the early 1970s, these same agencies outlined performance requirements and test methods for use in fire suppression chemical standards and specifications. In 1974, the U.S.D.A. Forest Service con-

Copyright National Fire Protection Association
Provided by IHS under license with NFPA
No reproduction or networking permitted without license from IHS
Not for Resale

tracted to assess the corrosion effects of wildland fire chemicals on storage, mixing, and application equipment to determine corrosion rates on critical alloys, correlate findings to actual field damage, and recommend methods of reducing corrosion effects. Special emphasis was placed on aerial delivery systems because of the potential risk of catastrophic failure of aircraft components exposed to the wildland fire chemicals. Results of these and following studies provided guidance for use and performance requirements for corrosion reduction in Forest Service specifications and standards and have been in use for over 30 years. They have been adopted for use by numerous agencies in the United States and internationally. These requirements were also adapted by NFPA in 1989 in the first "Standard on Fire Fighting Foam Chemicals for Class A Fuels in Rural, Suburban and Vegetated Areas" and in subsequent editions (NFPA 298 and 1150).

A.4.2.3.2 Tests for compatibility with nonmetallic materials might be conducted on samples removed from unused parts that are constructed of nonmetallic materials of defined composition. Given the variability of nonmetallic material composition, such tests are useful but do not provide assurance of nonmetallic material compatibility. Changes in test results can occur due to variations in the constituent components of the material even though the finished material meets specification. The nonmetallic compatibility tests required in this standard do not take into account any degrading effects of temperature, aging, or ultraviolet or infrared exposure conditions that are known to exist.

Foam concentrates and solutions come into contact with a broad range of nonmetallic materials. All such materials are not included in the list of those tested in this standard. The materials that are included are generally representative of those that are encountered in foam-proportioning and foam-handling systems. It is recommended that the foam concentrate manufacturer be contacted for information on specific materials.

A.4.3.1 See A.4.2.1.

A.4.3.3 The fire fighter should be aware that if the characteristics of the foam change, the amount of foam solution that is available to spread and wet the fuel changes. Fast-draining foams provide more solution to the fuel in a shorter time than do slow-draining foams. Consequently, more foam is not always better; to obtain the optimal foam for the application, the fire fighter needs to adjust (1) the mix ratio, (2) the application technique, (3) the type of foam-generating hardware, and/or (4) the operating pressure of the foam-generating system. For additional information, refer to NFPA 1145, *Guide for the Use of Class A Foams in Manual Structural Fire Fighting*.

The mix ratio affects physical properties such as surface tension and the wetting ability of the foam solution. Mix ratios in the range of 0.1 percent to 1.0 percent reduce surface tension values below those exhibited by water, which results in improved spreading and improved wetting of the fuel.

The mix ratio also has an impact on the characteristics of the foam that can be produced with a specific foam-generating system. The foam expansion ratio and drain time control where and how fast the foam solution is released to the fuel. Generating systems that increase the amount of air captured within the foam solution generally result in greater expansion ratio and slower drain times. Higher mix ratios generally increase the production of highly expanded foams with slower drain times. Slower drain times decrease the rate of penetration and wetting.

A.4.3.3.2 For additional information, refer to NFPA 1145, *Guide for the Use of Class A Foams in Manual Structural Fire Fighting* and A.5.2.7.

A.4.3.4 Generally, foam solutions have a cleansing action. Some can affect or interact with substances that normally protect against corrosion or lubricate metals. Such substances include natural oxides, grease, oil, paint, and other protective coatings.

Foam solutions can cause corrosion of metal surfaces. Corrosion requirements exist for several commonly used metals. Storage of foam solutions in containers other than those constructed of tested materials should be avoided. The foam manufacturer should be consulted regarding compatibility of materials.

Coatings, such as paints and galvanized surfaces, adhesives, sealants, and lubricants, should be evaluated, and those that react with foam solution should not be used where contact between the two is likely. If nonmetallic materials are used with foam solution, such materials should be tested in accordance with 5.3.3.

Foam solution is capable of passing through openings that are too small for water. Therefore, all joints, seams, or connections that are conceivably subject to leakage (e.g., valve packing, retainers, bushings, threaded joints, and screw unions) should be carefully examined.

A.4.3.4.3 The discussion in A.4.2.3.2 applies and should be reviewed.

A.5.1.3 The use of foam during fire-fighting operations typically moves from site to site, depending on fire activity. Environmental releases are likely to be infrequent at a given location. The test method for determining biodegradability was selected to reflect this fact. The test method uses a fresh bacterial culture that has not been previously exposed to the test product, and the test period has been increased to 42 days to allow time for the bacteria to adjust to the foam concentrate. The test measures the susceptibility of the product to decomposition under laboratory conditions and is not necessarily identical to the rate of breakdown in the environment.

A.5.2.2(1) The results achieved are specific to rotating spindle type viscometers, such as a Brookfield viscometer. Irrespective of the manufacturer of the particular instrument, it should be calibrated per the manufacturer's instructions using traceable viscosity standards. In reporting results, the spindle size (number) and rotational speed must be reported.

A.5.2.7 Class A foams are characterized by expansion ratio, drain time, and appearance. Class A foams can have significantly differing fire suppression and exposure protection capabilities, depending on their expansion ratio and drain time. It is important to be able to identify the type of foam that is produced on the basis of its appearance and to understand which type of foam is needed for a given fire. Class A foams are generally wet, fluid, or dry, as follows:

(1) Wet foam can range from a foam solution that has an expansion ratio of 1 and a 25 percent drain time of 0 seconds to a watery mass of large and small bubbles that can have an expansion ratio of up to 5 and a 25 percent drain time of less than 30 seconds. Wet foam can be used for direct and indirect fire attack. Wet foam is well suited for quickly penetrating and wetting fuels, making it an ideal mop-up (overhaul) tool.

--`,,,,,,`-`-`,,`,,`,`,,`---
Copyright National Fire Protection Association
Provided by IHS under license with NFPA
No reproduction or networking permitted without license from IHS
Not for Resale

(2) Fluid foams have an appearance that is similar to watery shaving cream with smaller and more-uniform bubbles than wet foam. Expansion ratios are typically in the range of 6 to 10, with 25 percent drain times that are typically less than 90 seconds. Fluid foams can be used for direct and indirect fire attack and for mop-up (overhaul) where blanketing is desired. They also can be used to coat horizontal and vertical fuel surfaces to provide cooling for suppression.
(3) Dry or stiff foams have an appearance similar to shaving cream and expansion ratios greater than 10 and 25 percent drain times greater than those of fluid foams. Dry or stiff foams contain a large volume of air and are well suited for exposure protection, especially on vertical and inverted surfaces.

It should be understood that Class A foams depend entirely on their contained water for fire suppression. Wet and fluid foams contain more water per unit volume than dry foams and are consequently more effective in fire suppression. However, dry foams, which contain the least amount of water per unit volume, can be more appropriate where used for exposure protection.

A.5.2.7.1 This test method was developed to provide the user or laboratory with a means of determining the foaming performance of concentrates and solutions. The test allows the user to examine any effects of different types of water or any effects of storage time or conditions on the foaming ability of concentrates or solutions. The user should note that, in practice, foam expansion ratios are dependent on mix ratio, water quality, and the system used to generate the foam. For field evaluation, it might be desirable to conduct this test using water that is available locally for fire fighting. Increasing the mix ratio can be necessary to generate the desired foam consistency where consistency is affected by poor water quality, cold water, or degradation of concentrate or solution.

When the test is conducted, the graduated cylinder should be shaken in the manner shown in Figure A.5.2.7.1. The stopper is placed in the graduated cylinder and held in place with the thumb, as illustrated. The cylinder is then shaken vigorously in a 90-degree arc until all the liquid is incorporated in the foam structure.

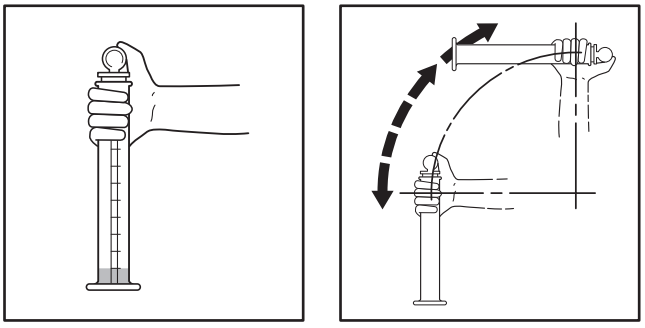

FIGURE A.5.2.7.1 Shaking Motion for Cylinder with Stopper in Place.

A.5.3.1.5 Coupons can be obtained from Corrosion Test Supplies Inc., 18818 Highway 22, Maurepas, LA 70449, or other suppliers of corrosion test coupons. Coupons from other suppliers might produce different results.

Annex B Informational References

B.1 Referenced Publications. The following documents or portions thereof are referenced within this standard for informational purposes only and are thus not part of the requirements of this document unless also listed in Chapter 2.

B.1.1 NFPA Publication. National Fire Protection Association, 1 Batterymarch Park, Quincy, MA 02169-7471.

NFPA 1145, *Guide for the Use of Class A Foams in Manual Structural Fire Fighting*, 2000 edition.

B.1.2 Other Publications.

B.1.2.1 U.S. Government Publications. Program Leader, Wildland Fire Chemical Systems, U.S.D.A. Forest Service, 5785 Highway 10 West, Missoula, MT 59808.

"Chemicals Used in Wildland Fire Suppression: A Risk Assessment," Labat-Anderson Incorporated for U.S.D.A. Forest Service, Intermountain Fire Sciences Laboratory, July 1996.

"Ecological Risk Assessment: Wildland Fire-Fighting Chemicals," Labat-Anderson Incorporated for U.S.D.A. Forest Service, Missoula Technology and Development Center, 2004.

"Human Health Risk Assessment: Wildland Fire-Fighting Chemicals," Labat-Anderson Incorporated for U.S.D.A. Forest Service, Missoula Technology and Development Center, January 22, 2003 (with March 6, 2003 revisions).

B.2 Informational References. The following documents or portions thereof are listed here as informational resources only. They are not a part of the requirements of this document.

B.2.1 The following documents provide additional information on foam development and application.

Coletti, Dominic J., *Class A Foam — Best Practice for Structural Fire Fighters*, Lyons Publishing, Royersford, PA, 1998.

Coletti, Dominic J., Davis, Larry, *Foam Firefighting Operations 1, Essentials of Class A Foam — Awareness Level*, Lyons Publishing, Royersford, PA, 2002.

Foam vs. Fire: Primer. Boise, ID: National Interagency Fire Center; National Wildfire Coordinating Group, NFES 2270, 1992.

Foam vs. Fire: Class A Foam for Wildland Fires. Boise, ID: National Interagency Fire Center; National Wildfire Coordinating Group, NFES 2246, 1993.

Foam vs. Fire: Aerial Application. Boise, ID: National Interagency Fire Center; National Wildfire Coordinating Group, NFES 1845, 1995.

Liebson, John. An Introduction to Class A Foam and Compressed Air Foam Systems. Stafford, VA: International Society of Fire Service Instructors (IFSI), 1993.

Principles of Foam Fire Fighting, Fire Protection Publications, Oklahoma State University, Stillwater, OK, 2nd ed., 2003.

"Proceedings: International Wildland Fire Foam Symposium." Chalk River, Ontario, Canada: Forestry Canada, Publication Distribution Centre, 1994.

B.3 References for Extracts. The following documents are listed here to provide reference information, including title and edition, for extracts given throughout the nonmandatory sections of this standard as indicated by a reference in brackets [ ] following a section or paragraph. These documents are not a part of the requirements of this document unless also listed in Chapter 2 for other reasons.

NFPA 472, *Standard for Professional Competence of Responders to Hazardous Materials Incidents*, 2002 edition.

Copyright National Fire Protection Association
Provided by IHS under license with NFPA
No reproduction or networking permitted without license from IHS
Not for Resale

Index

© National Fire Protection Association. All Rights Reserved.

The copyright in this index is separate and distinct from the copyright in the document that it indexes. The licensing provisions set forth for the document are not applicable to this index. This index may not be reproduced in whole or in part by any means without the express written permission of NFPA.

-A-

Acceptance requirements ..... 1.2, Chap. 4
Foam 4.4
Foam concentrate 4.2
Foam solution 4.3, A.4.3
Air-aspirating foam nozzle ..... A.3.3.11(2)
Aircraft .....*see* Fixed-wing aircraft; Helicopters
Aquatic toxicity 4.2.1.2, 5.1.2
Artificial sea water 4.4.1, 4.4.2, 5.2.7.1, A.5.2.7.1
Definition 3.3.1
Authority having jurisdiction (definition) 3.2.1, A.3.2.1

-B-

Biodegradability 4.2.1.3
Definition 3.3.2
Tests 5.1.3, A.5.1.3
Buckets 4.2.3.1, 4.3.4.2.3

-C-

Class A foam
Definition 3.3.3, A.3.3.11
Systems for producing A.3.3.11
Types of A.5.2.7
Class A fuel (definition) 3.3.4
Compressed air foam system ..... A.3.3.11(1)
Conventional nozzles ..... A.3.3.11(3)
Corrosion 4.2.3, 4.3.4, A.4.2.3, A.4.3.4
Intergranular .....*see* Intergranular corrosion
Tests 5.3.1, 5.3.2, A.5.3.1.5
Uniform .....*see* Uniform corrosion

-D-

Definitions ..... Chap. 3
Documentation 4.3.2.2, 4.5.2
Drain time 4.2.2.1.2, 4.4.2
Definition 3.3.5
Tests 5.2.7, A.5.2.7

-E-

Engines, ground 4.3.4.2.3
Environmental considerations
Foam concentrate 4.2.1, A.4.2.1
Foam solution 4.3.2
Tests 5.1, A.1.2
Expansion ratio (foam) 4.2.2.1.2, 4.4.1
Definition 3.3.6
Tests 5.2.7, A.5.2.7

-F-

Fixed tanks 4.3.4.2.2
Definition 3.3.7
Fixed-wing aircraft ..... 4.2.3.1, 4.3.4.2.1, A.3.3.11(4), A.4.2.3.1
Flash point 4.2.1.4, 5.1.4
Definition 3.3.8
Foam ..... 1.1; *see also* Class A Foam
Acceptance requirements 4.1.1, 4.4, A.4.1.1
Characteristics 4.1.1, A.4.1.1, A.4.3.3
Definition 3.3.9
Tests, physical properties 5.2.7, A.5.2.7
Foam chemicals ..... 1.1, 1.2, A.1.2; *see also* Foam; Foam concentrate; Foam solution
Definition 3.3.10
Foam concentrate
Acceptance requirements 4.1.1, 4.2, A.4.1.1
Characteristics 4.1.1, A.4.1.1
Definition 3.3.11, A.3.3.11
Sample 4.1.3
Tests
Corrosion and materials compatibility 5.3.1, 5.3.3, A.5.3.1.5
Health, safety, and environmental considerations 5.1, A.5.1.3
Physical properties ..... 5.2.1 to 5.2.4, A.5.2.2(1)
Foam solution
Acceptance requirements 4.1.1, 4.3, A.4.1.1
Characteristics 4.1.1, A.4.1.1, A.4.3.3
Definition 3.3.12
Tests
Concentrations of solution 4.3.1, A.1.1
Corrosion and materials compatibility 5.3, A.5.3.1.5
Health, safety, and environmental considerations 5.1.1
Physical properties ..... 5.2.5 to 5.2.7, A.5.2.7
Fresh water 4.4.1, 4.4.2, 5.2.7.1, A.5.2.7.1
Definition 3.3.13

-G-

Ground application 4.2.3.1, A.4.2.3.1
Ground engines 4.3.4.2.3

-H-

Health and safety
Foam concentrate 4.2.1, A.1.2, A.4.2.1
Foam solution 4.3.2, A.1.2
Helicopters ..... 4.2.3.1, 4.3.4.2.2, 4.3.4.2.3, A.3.3.11(4), A.4.2.3.1

-I-

Intergranular corrosion 4.3.4.2, 5.3.2
Definition 3.3.14

-L-

Labeling requirements 4.5.1
LC_{50} (lethal concentration$_{50}$) 4.2.1.1.1, 4.2.1.1.2, 4.2.1.2
Definition 3.3.15
LD_{50} (lethal dosage$_{50}$) ..... Table 4.2.1.1
Definition 3.3.16

-M-

Mammalian toxicity 4.2.1.1, 4.3.2.1, 5.1.1
Material safety data sheet (MSDS) 4.5.2.2
Definition 3.3.17, A.3.3.17
Miscibility, foam concentrate 4.2.2.3, 5.2.3, A.4.2.2.3
Definition 3.3.18
Mix ratio, foam concentrate A.4.3.3
Definition 3.3.19

--`,,,,,,-`-`,,`,,`,`,,`---

Copyright National Fire Protection Association
Provided by IHS under license with NFPA
No reproduction or networking permitted without license from IHS
Not for Resale

-N-

Nonmetallic materials, compatibility with
Foam concentrate 4.2.3.2, A.4.2.3.2
Foam solution 4.3.4.3, A.4.3.4.3
Tests 5.3.3
Hardness test 5.3.3.3
Volume test 5.3.3.2
Nozzles
Air-aspirating foam ..... A.3.3.11(2)
Conventional ..... A.3.3.11(3)

-P-

Packaging requirements 4.2.4
Physical properties
Foam concentrate 4.2.2, A.4.2.2
Foam solution 4.3.3, A.4.3.3
Tests ..... 5.2, A.5.2.2(1), A.5.2.7
Pour point, foam concentrate 4.2.2.4, 5.2.4, A.4.2.2.4
Product data sheet 4.2.2.2, 4.2.2.3.2, 4.2.2.4, 4.2.3.2.4, 4.3.3.1, 4.3.3.2, 4.3.4.3.3, 4.4.1, 4.4.2, 4.5.2
Purpose of standard 1.2, A.1.2

-R-

References ..... Chap. 2, Annex B

-S-

Scope of standard 1.1, A.1.1
Sea water, artificial ..... *see* Artificial sea water
Shall (definition) 3.2.2
Should (definition) 3.2.3
Stability, foam concentrate 4.2.2.1, 5.2.1, A.4.2.2.1
Standard (definition) 3.2.4, A.3.2.4
Surface tension, foam solution 4.3.3.1
Definition 3.3.20
Tests 5.2.5

-T-

Tanks A.4.1.1
Fixed 4.3.4.2.2
Definition 3.3.7
Tests ..... 1.2.1, 4.1.2, Chap. 5
Biodegradability 5.1.3, A.5.1.3
Corrosion 5.3.1, 5.3.2, A.5.3.1.5
Expansion ratio 5.2.7, A.5.2.7
Miscibility 5.2.3
Nonmetallic materials, compatibility of 5.3.3
Pour point 5.2.4
Samples for 4.1.3
Stability of concentrate 5.2.1
Surface tension 5.2.5
Toxicity 5.1.1, 5.1.2
Viscosity ..... 5.2.2, A.5.2.2(1)
Wetting ability 5.2.6
Toxicity
Aquatic 4.2.1.2, 5.1.2
Mammalian 4.2.1.1, 4.3.2.1, 5.1.1
Tests 5.1.1, 5.1.2

-U-

Uniform corrosion 4.2.3.1, 4.3.4.1, 5.3.1, A.4.2.3.1, A.5.3.1.5
Definition 3.3.21

-V-

Viscosity (foam) ..... 4.2.2.2, 5.2.2, A.5.2.2(1)
Definition 3.3.22

-W-

Water ..... *see also* Artificial sea water; Fresh water
Deionized 4.4.1, 4.4.2, 5.2.7.1, A.5.2.7.1
Wetting ability 4.3.3.2, 5.2.6, A.4.3.3.2
Definition 3.3.23

--`,,,,,,-`-`,,`,,`,`,,`---
Copyright National Fire Protection Association
Provided by IHS under license with NFPA
No reproduction or networking permitted without license from IHS
Not for Resale

Sequence of Events Leading to Publication of an NFPA Committee Document

Call goes out for proposals to amend existing document or for recommendations on new document.

▼

Committee meets to act on proposals, to develop its own proposals, and to prepare its report.

▼

Committee votes on proposals by letter ballot. If two-thirds approve, report goes forward. Lacking two-thirds approval, report returns to committee.

▼

Report — *Report on Proposals* (ROP) — is published for public review and comment.

▼

Committee meets to act on each public comment received.

▼

Committee votes on comments by letter ballot. If two-thirds approve, supplementary report goes forward. Lacking two-thirds approval, supplementary report returns to committee.

▼

Supplementary report — *Report on Comments* (ROC) — is published for public review.

▼

NFPA membership meets (Annual or Fall Meeting) and acts on committee report (ROP or ROC).

▼

Committee votes on any amendments to report approved at NFPA Annual or Fall Meeting.

▼

Appeals to Standards Council on Association action must be filed within 20 days of the NFPA Annual or Fall Meeting.

▼

Standards Council decides, based on all evidence, whether or not to issue standard or to take other action, including upholding any appeals.

Committee Membership Classifications

The following classifications apply to Technical Committee members and represent their principal interest in the activity of the committee.

M *Manufacturer:* A representative of a maker or marketer of a product, assembly, or system, or portion thereof, that is affected by the standard.

U *User:* A representative of an entity that is subject to the provisions of the standard or that voluntarily uses the standard.

I/M *Installer/Maintainer:* A representative of an entity that is in the business of installing or maintaining a product, assembly, or system affected by the standard.

L *Labor:* A labor representative or employee concerned with safety in the workplace.

R/T *Applied Research/Testing Laboratory:* A representative of an independent testing laboratory or independent applied research organization that promulgates and/or enforces standards.

E *Enforcing Authority:* A representative of an agency or an organization that promulgates and/or enforces standards.

I *Insurance:* A representative of an insurance company, broker, agent, bureau, or inspection agency.

C *Consumer:* A person who is, or represents, the ultimate purchaser of a product, system, or service affected by the standard, but who is not included in the *User* classification.

SE *Special Expert:* A person not representing any of the previous classifications, but who has a special expertise in the scope of the standard or portion thereof.

NOTES:

1. "Standard" connotes code, standard, recommended practice, or guide.
2. A representative includes an employee.
3. While these classifications will be used by the Standards Council to achieve a balance for Technical Committees, the Standards Council may determine that new classifications of members or unique interests need representation in order to foster the best possible committee deliberations on any project. In this connection, the Standards Council may make such appointments as it seems appropriate in the public interest, such as the classification of "Utilities" in the National Electrical Code Committee.
4. Representatives of subsidiaries of any group are generally considered to have the same classification as the parent organization.

Copyright National Fire Protection Association
Provided by IHS under license with NFPA
No reproduction or networking permitted without license from IHS
Not for Resale

NFPA Technical Committee Document Proposal Form

Note: All proposals must be received by 5:00 p.m. EST/EDST on the published proposal closing date.

For further information on the standards-making process, please contact Codes and Standards Administration at 617-984-7249. For technical assistance, please call NFPA at 617-770-3000.

FOR OFFICE USE ONLY
Log #: _____
Date Rec'd: _____

Please indicate in which format you wish to receive your ROP/ROC: ☐ **CD ROM** ☐ **paper** ☐ **download**
(Note: In choosing the download option you intend to view the ROP/ROC from our Website. No copy will be sent to you.)

Date 12/18/02 **Name** John B. Smith **Telephone** 617-555-1212
Company _____
Address 9 Seattle St. **City** Seattle **State** WA **Zip** 02255
Please indicate organization represented (if any) Fire Marshals Assn. of North America

1. **a) NFPA Document Title** National Fire Alarm Code
   b) NFPA No. & Edition NFPA 72, 2002 ed. **c) Section/Paragraph** 4.4.7.1.1

2. **Proposal Recommends:** *(check one)* ☐ **new text** ☐ **revised text** ☒ **deleted text**

3. **Proposal.** *(Include proposed new or revised wording, or identification of wording to be deleted.)* Note: Proposed text should be in legislative format, that is, use underscore to denote wording to be inserted (inserted wording) and strike-through to denote wording to be deleted (~~deleted wording~~). Delete exception.

4. **Statement of Problem and Substantiation for Proposal.** Note: State the problem that will be resolved by your recommendation. Give the specific reason for your proposal including copies of tests, research papers, fire experience, etc. If more than 200 words, it may be abstracted for publication. A properly installed and maintained system should be free of ground faults. The occurrence of one or more ground faults should be required to cause a "trouble" signal because it indicates a condition that could contribute to future malfunction of the system. Ground fault protection has been widely available on these systems for years and its cost is negligible. Requiring it on all systems will promote better installations, maintenance and reliability.

5. ☒ **This Proposal is Original Material.** Note: Original material is considered to be the submitter's own idea based on or as a result of his/her own experience, thought, or research and, to the best of his/her knowledge, is not copied from another source.

   ☐ **This Proposal is Not Original Material; Its Source** ***(if known)*** **is as Follows:** _____

Sample

I hereby grant the NFPA all and full rights in copyright to this proposal, and I understand that I acquire no rights in any publication of NFPA in which this proposal in this or another similar or analogous form is used.

Signature ***(Required)*** John B. Smith

PLEASE USE SEPARATE FORM FOR EACH PROPOSAL • NFPA FAX (617) 770-3500

Mail to: Secretary, Standards Council • NFPA • 1 Batterymarch Park • PO Box 9101 • Quincy, MA 02269-9101

Copyright National Fire Protection Association
Provided by IHS under license with NFPA
No reproduction or networking permitted without license from IHS
Not for Resale

NFPA Technical Committee Document Proposal Form

Note: All proposals must be received by 5:00 p.m. EST/EDST on the published proposal closing date.

For further information on the standards-making process, please contact Codes and Standards Administration at 617-984-7249. For technical assistance, please call NFPA at 617-770-3000.

FOR OFFICE USE ONLY
Log #: _____
Date Rec'd: _____

Please indicate in which format you wish to receive your ROP/ROC: ☐ **CD ROM** ☐ **paper** ☐ **download**
(Note: In choosing the download option you intend to view the ROP/ROC from our Website. No copy will be sent to you.)

Date _____ **Name** _____ **Telephone** _____
Company _____
Address _____ **City** _____ **State** _____ **Zip** _____
Please indicate organization represented (if any) _____

1. **a) NFPA Document Title** _____
   b) NFPA No. & Edition _____ **c) Section/Paragraph** _____

2. **Proposal Recommends:** *(check one)* ☐ **new text** ☐ **revised text** ☐ **deleted text**

3. **Proposal.** *(Include proposed new or revised wording, or identification of wording to be deleted.)* Note: Proposed text should be in legislative format, that is, use underscore to denote wording to be inserted (inserted wording) and strike-through to denote wording to be deleted (~~deleted wording~~). _____

4. **Statement of Problem and Substantiation for Proposal.** Note: State the problem that will be resolved by your recommendation. Give the specific reason for your proposal including copies of tests, research papers, fire experience, etc. If more than 200 words, it may be abstracted for publication. _____

5. ☐ **This Proposal is Original Material.** Note: Original material is considered to be the submitter's own idea based on or as a result of his/her own experience, thought, or research and, to the best of his/her knowledge, is not copied from another source.

   ☐ **This Proposal is Not Original Material; Its Source *(if known)* is as Follows:** _____

I hereby grant the NFPA all and full rights in copyright to this proposal, and I understand that I acquire no rights in any publication of NFPA in which this proposal in this or another similar or analogous form is used.

Signature *(Required)* _____

PLEASE USE SEPARATE FORM FOR EACH PROPOSAL • NFPA FAX (617) 770-3500

Mail to: Secretary, Standards Council • NFPA • 1 Batterymarch Park • PO Box 9101 • Quincy, MA 02269-9101

--`,,,,,,-`-`,,`,,`,`,,`---

Copyright National Fire Protection Association
Provided by IHS under license with NFPA
No reproduction or networking permitted without license from IHS

Not for Resale