NFPA 1145

Guide for the Use of Class A Foams in Manual Structural Fire Fighting

2006 Edition

NFPA, 1 Batterymarch Park, Quincy, MA 02169-7471
An International Codes and Standards Organization

Copyright National Fire Protection Association
Provided by IHS under license with NFPA
No reproduction or networking permitted without license from IHS
Not for Resale

IMPORTANT NOTICES AND DISCLAIMERS CONCERNING NFPA DOCUMENTS

NOTICE AND DISCLAIMER OF LIABILITY CONCERNING THE USE OF NFPA DOCUMENTS

NFPA codes, standards, recommended practices, and guides, of which the document contained herein is one, are developed through a consensus standards development process approved by the American National Standards Institute. This process brings together volunteers representing varied viewpoints and interests to achieve consensus on fire and other safety issues. While the NFPA administers the process and establishes rules to promote fairness in the development of consensus, it does not independently test, evaluate, or verify the accuracy of any information or the soundness of any judgments contained in its codes and standards.

The NFPA disclaims liability for any personal injury, property or other damages of any nature whatsoever, whether special, indirect, consequential or compensatory, directly or indirectly resulting from the publication, use of, or reliance on this document. The NFPA also makes no guaranty or warranty as to the accuracy or completeness of any information published herein.

In issuing and making this document available, the NFPA is not undertaking to render professional or other services for or on behalf of any person or entity. Nor is the NFPA undertaking to perform any duty owed by any person or entity to someone else. Anyone using this document should rely on his or her own independent judgment or, as appropriate, seek the advice of a competent professional in determining the exercise of reasonable care in any given circumstances.

The NFPA has no power, nor does it undertake, to police or enforce compliance with the contents of this document. Nor does the NFPA list, certify, test or inspect products, designs, or installations for compliance with this document. Any certification or other statement of compliance with the requirements of this document shall not be attributable to the NFPA and is solely the responsibility of the certifier or maker of the statement.

Copyright National Fire Protection Association
Provided by IHS under license with NFPA
No reproduction or networking permitted without license from IHS
Not for Resale

ADDITIONAL NOTICES AND DISCLAIMERS

Updating of NFPA Documents

Users of NFPA codes, standards, recommended practices, and guides should be aware that these documents may be superseded at any time by the issuance of new editions or may be amended from time to time through the issuance of Tentative Interim Amendments. An official NFPA document at any point in time consists of the current edition of the document together with any Tentative Interim Amendments and any Errata then in effect. In order to determine whether a given document is the current edition and whether it has been amended through the issuance of Tentative Interim Amendments or corrected through the issuance of Errata, consult appropriate NFPA publications such as the National Fire Codes® Subscription Service, visit the NFPA website at www.nfpa.org, or contact the NFPA at the address listed below.

Interpretations of NFPA Documents

A statement, written or oral, that is not processed in accordance with Section 6 of the Regulations Governing Committee Projects shall not be considered the official position of NFPA or any of its Committees and shall not be considered to be, nor be relied upon as, a Formal Interpretation.

Patents

The NFPA does not take any position with respect to the validity of any patent rights asserted in connection with any items which are mentioned in or are the subject of NFPA codes, standards, recommended practices, and guides, and the NFPA disclaims liability for the infringement of any patent resulting from the use of or reliance on these documents. Users of these documents are expressly advised that determination of the validity of any such patent rights, and the risk of infringement of such rights, is entirely their own responsibility.

NFPA adheres to applicable policies of the American National Standards Institute with respect to patents. For further information contact the NFPA at the address listed below.

Law and Regulations

Users of these documents should consult applicable federal, state, and local laws and regulations. NFPA does not, by the publication of its codes, standards, recommended practices, and guides, intend to urge action that is not in compliance with applicable laws, and these documents may not be construed as doing so.

Copyrights

This document is copyrighted by the NFPA. It is made available for a wide variety of both public and private uses. These include both use, by reference, in laws and regulations, and use in private self-regulation, standardization, and the promotion of safe practices and methods. By making this document available for use and adoption by public authorities and private users, the NFPA does not waive any rights in copyright to this document.

Use of NFPA documents for regulatory purposes should be accomplished through adoption by reference. The term "adoption by reference" means the citing of title, edition, and publishing information only. Any deletions, additions, and changes desired by the adopting authority should be noted separately in the adopting instrument. In order to assist NFPA in following the uses made of its documents, adopting authorities are requested to notify the NFPA (Attention: Secretary, Standards Council) in writing of such use. For technical assistance and questions concerning adoption of NFPA documents, contact NFPA at the address below.

For Further Information

All questions or other communications relating to NFPA codes, standards, recommended practices, and guides and all requests for information on NFPA procedures governing its codes and standards development process, including information on the procedures for requesting Formal Interpretations, for proposing Tentative Interim Amendments, and for proposing revisions to NFPA documents during regular revision cycles, should be sent to NFPA headquarters, addressed to the attention of the Secretary, Standards Council, NFPA, 1 Batterymarch Park, P.O. Box 9101, Quincy, MA 02269-9101.

For more information about NFPA, visit the NFPA website at www.nfpa.org.

Copyright National Fire Protection Association
Provided by IHS under license with NFPA
No reproduction or networking permitted without license from IHS
Not for Resale

Copyright © 2005, National Fire Protection Association, All Rights Reserved

NFPA 1145

Guide for the

Use of Class A Foams in Manual Structural Fire Fighting

2006 Edition

This edition of NFPA 1145, *Guide for the Use of Class A Foams in Manual Structural Fire Fighting*, was prepared by the Technical Committee on Forest and Rural Fire Protection and acted on by NFPA at its June Association Technical Meeting held June 6–10, 2005, in Las Vegas, NV. It was issued by the Standards Council on July 29, 2005, with an effective date of August 18, 2005, and supersedes all previous editions.

This edition of NFPA 1145 was approved as an American National Standard on August 18, 2005.

Origin and Development of NFPA 1145

At the request of the NFPA Standards Council in 1998, the Technical Committee on Forest and Rural Fire Protection developed NFPA 1145 as a guide to assist fire departments and wildland fire agencies in the use of Class A foams for structural fire suppression and protection.

The Committee initially considered writing a standard on the application of Class A foam. However, because of the still-evolving use of Class A foam and its associated hardware and proportioning systems, the Committee decided that a guide to the use of such foam would be of greater benefit to the many fire departments and agencies that are exploring the use of Class A foam for structural fire protection as well as fire suppression and extinguishment.

This second edition reorganized the document in accordance with the *Manual of Style for NFPA Technical Committee Documents,* updated definitions as appropriate to use the preferred definition, and editorially updated and expanded the text to continue to make the document more useful to the reader. References to additional materials that could aid the reader in using Class A foam were also added.

--`,,```,,-`-`,,`,,`,`,,`---

Copyright National Fire Protection Association
Provided by IHS under license with NFPA
No reproduction or networking permitted without license from IHS

Not for Resale

Technical Committee on Forest and Rural Fire Protection

Randall K. Bradley, *Chair*
Lawrence Livermore National Laboratory, CA [U]

John E. Bunting, *Secretary*
New Boston Fire Department, NH [U]

Lynn R. Biddison, Fire-Trol Holdings LLC, AZ [IM]
James D. Bowman, American Forest & Paper Association, WA [M]
Rep. American Forest & Paper Association
Martin P. Carrier, Carrier Business Advisory Services, Ltd., NH [U]
Rep. National Volunteer Fire Council
Philip A. Cocker, Los Angeles County Fire Department, CA [U]
Alice R. Forbes, U.S.D.A. Forest Service, CA [E]
Rep. U.S.D.A. Forest Service
Donald C. Freyer, Warner Robins, GA [SE]
Charles W. George, Frenchtown, MT [SE]
Curt T. Grieve, Sacramento, CA [SE]
Mitchell Hubert, Ansul Incorporated/Tyco International, WI [M]
Cecilia W. Johnson, U.S.D.A. Forest Service, MT [RT]
Rep. U.S.D.A. Forest Service
Roy A. Johnson, U.S. Department of the Interior, ID [E]
Gregory Kozey, Kochek Company, Inc., CT [M]
Dale K. Larson, Fireman's Friend Engineering, Inc., TN [M]
Daniel Madrzykowski, U.S. National Institute of Standards & Technology, MD [RT]
William M. Neville, Jr., Neville Associates, CA [SE]
Martin J. Pabich, Underwriters Laboratories Inc., IL [RT]
David B. Rathbun, Rural/Metro Fire Department, AZ [U]
Frederick S. Richards, New York Department of State, NY [E]
Rep. International Fire Marshals Association
Herbert A. Spitzer, Jr., Spitzer's Fire & Environmental Consulting, CA [SE]
Alan D. Stovall, State of California, CA [U]
Edward F. Straw, Insurance Services Office, Inc., GA [I]
Howard L. Vandersall, Lawdon Fire Services, Inc., CA [SE]
James T. Wooters, Mizelle, Hodges and Associates Inc., GA [SE]

Alternates

James A. Burns, New York Department of State, NY [E]
(Alt. to F. S. Richards)
Robert L. Crouch, Fire-Trol Holdings LLC, AZ [IM]
(Alt. to L. R. Biddison)
Sam W. Francis, American Forest & Paper Association, PA [M]
(Alt. to J. D. Bowman)
Jack K. Johnson, Alamosa Fire Department, CO [U]
(Alt. to M. P. Carrier)
Peter Matulonis, Tyco Safety Products, IL [M]
(Alt. to M. Hubert)
Emil W. Misichko, Underwriters Laboratories Inc., IL [RT]
(Alt. to M. J. Pabich)
Robert M. Swinford, U.S.D.A. Forest Service, DC [E]
(Alt. to A. R. Forbes)
William D. Walton, U.S. National Institute of Standards & Technology, MD [RT]
(Alt. to D. Madrzykowski)

Carl E. Peterson, NFPA Staff Liaison

This list represents the membership at the time the Committee was balloted on the final text of this edition. Since that time, changes in the membership may have occurred. A key to classifications is found at the back of the document.

NOTE: Membership on a committee shall not in and of itself constitute an endorsement of the Association or any document developed by the committee on which the member serves.

Committee Scope: This Committee shall have primary responsibility for documents on fire protection for rural, suburban, forest, grass, brush, and tundra areas. This Committee shall also have primary responsibility for documents on Class A foam and its utilization for all wildland and structural fire fighting. This excludes fixed fire protection systems.

--`,,```,-`-`,,`,,`,`,,`---

Copyright National Fire Protection Association
Provided by IHS under license with NFPA
No reproduction or networking permitted without license from IHS
Not for Resale

Contents

Chapter 1 Administration **1145–** 4
1.1 Scope **1145–** 4
1.2 Purpose **1145–** 4
1.3 Foreword **1145–** 4

Chapter 2 Referenced Publications **1145–** 5
2.1 General **1145–** 5
2.2 NFPA Publications **1145–** 5
2.3 Other Publication **1145–** 5
2.4 References for Extracts in Advisory Sections **1145–** 5

Chapter 3 Definitions **1145–** 5
3.1 General **1145–** 5
3.2 NFPA Official Definitions **1145–** 5
3.3 General Definitions **1145–** 5

Chapter 4 Foam Properties and Characteristics .. **1145–** 6
4.1 Foam Concentrate **1145–** 6
4.2 Foam Solution **1145–** 7
4.3 Foam **1145–** 7

Chapter 5 Hardware **1145–** 8
5.1 General **1145–** 8
5.2 Proportioning **1145–** 8
5.3 Foam Generation and Discharge **1145–**10
5.4 Check Valves **1145–**12

Chapter 6 Foam Operations **1145–**12
6.1 General **1145–**12
6.2 Selection of Foam Characteristics and Application Techniques **1145–**12
6.3 Operator Information **1145–**14
6.4 Routine and Post-Incident System Maintenance **1145–**14
6.5 Post-Incident Documentation **1145–**14

Chapter 7 Operational Safety **1145–**14
7.1 General **1145–**14
7.2 Working Conditions **1145–**14

Annex A Explanatory Material **1145–**15

Annex B Informational References **1145–**16

Index **1145–**17

--`,,```,,-`-`,,`,,`,`,,`---
Copyright National Fire Protection Association
Provided by IHS under license with NFPA
No reproduction or networking permitted without license from IHS
Not for Resale

NFPA 1145

Guide for the

Use of Class A Foams in Manual Structural Fire Fighting

2006 Edition

IMPORTANT NOTE: This NFPA document is made available for use subject to important notices and legal disclaimers. These notices and disclaimers appear in all publications containing this document and may be found under the heading "Important Notices and Disclaimers Concerning NFPA Documents." They can also be obtained on request from NFPA or viewed at www.nfpa.org/disclaimers.

NOTICE: An asterisk (*) following the number or letter designating a paragraph indicates that explanatory material on the paragraph can be found in Annex A.

A reference in brackets [ ] following a section or paragraph indicates material that has been extracted from another NFPA document. As an aid to the user, the complete title and edition of the source documents for extracts in advisory sections of this document are given in Chapter 2 and those for extracts in the informational sections are given in Annex B. Editorial changes to extracted material consist of revising references to an appropriate division in this document or the inclusion of the document number with the division number when the reference is to the original document. Requests for interpretations or revisions of extracted text should be sent to the technical committee responsible for the source document.

Information on referenced publications can be found in Chapter 2 and Annex B.

Chapter 1 Administration

1.1 Scope.

1.1.1 This document presents fundamental information for agencies planning to use Class A foam for structural fire fighting and protection. It presents necessary and useful information on foam properties and characteristics, proportioning and discharge hardware, application techniques, and safety considerations.

1.1.2 This document describes the use and application of Class A foams that meet the requirements of NFPA 1150, *Standard on Foam Chemicals for Fires in Class A Fuels.*

1.1.3 This document does not apply to the use of Class A foam in sprinkler systems or on fires involving Class B flammable or combustible liquids.

1.1.4 This document is not written for applications of Class A foam in the wildland fire environment. However, much of the material in this guide can be helpful to those who use Class A foam in wildland fire applications. See Annex B for publications that address use of Class A foam in wildland applications.

1.1.5 This document is not intended to discourage the use of future technologies and practices provided that the recommended level of safety is not lessened.

1.2 Purpose. The primary purpose of this document is to present information on the safe and effective use of Class A foam for manual structural fire fighting and protection.

1.3 Foreword. Fire-fighting foam is a mass of air-filled bubbles formed by mixing air with a surfactant solution. Surfactant solutions are prepared by proportioning a foam concentrate with water. Fire-fighting foams have been designed for use on different fuel types. There are two broad categories of fire-fighting foam — Class A and Class B. Class B foams are designed for use on fires involving flammable and combustible liquids and are discussed in NFPA 11, *Standard for Low-, Medium-, and High-Expansion Foam.* Class A foams are best suited for use on fires involving ordinary combustibles (Class A fuels) and are not recommended for use on Class B fuels unless listed for this purpose. Class A foam concentrates, when mixed with water at concentrations in the range of 0.1 to 1.0 percent by volume, produce an array of foam solutions and foams. Class A foam used in manually fighting structural fires is discussed in this guide.

1.3.1 Although shown to be effective as early as the 1930s, fire-fighting foam was not generally used on Class A fuels until the mid 1980s. By that time, improvements in foam concentrate and application systems had progressed to the point where their use was practical and growing. Since that time, a number of effective Class A foam concentrates and an array of foam generation and application hardware have been developed and optimized. For more information on Class A foam and foam proportioning equipment, see NFPA 1150 and NFPA 1901, *Standard for Automotive Fire Apparatus.* Fire apparatus using foam proportioners, aerating nozzles, and compressed air foam systems (CAFS) can use Class A foam concentrates to produce foam. Foam can also be applied aerially from water-scooping fixed- and rotary-wing aircraft. The resulting foams are effective on fires in the variety of fuels found in structure fires, wildland fires, and the rural/urban interface.

1.3.2 Class A foams can be characterized by expansion ratio, drain time, and appearance. It is important to be able to identify the type of foam being produced based on the foam's appearance and to understand which type of foam is needed for a given fire situation. Wet and fluid foams contain more water per unit volume than dry foams and are consequently more effective in fire extinguishment. Dry foams may, however, be more appropriately used in many situations for exposure protection due to their longer drain times and adhesion to vertical surfaces. Class A foams can have significantly different fire extinguishment and exposure protection capabilities, depending on their expansion ratio and drain time. Thus, the type and geometric arrangement of the fuel involved will determine which is the most effective type of foam.

1.3.3 The effectiveness of Class A foam primarily depends on the amount of water that it brings into contact with the fuel/fire interface for insulating or cooling, or both. Aqueous solutions that contain low concentrations of the foam additive exhibit surface tensions less than half that of water alone. This reduction improves the penetrating capability of the solution, allowing a greater amount of the applied liquid to be captured and sorbed by porous fuels. As increasing amounts of air are introduced into the foam solution, the foam consistency changes from a wet foam to a fluid one and, finally, to a dry or stiff, lather-like foam.

1.3.4 The fire fighter should be aware that by changing the characteristics of the foam, the rate of drained solution available to wet the fuel will change. Fast-draining foams provide more solution to the fuel in a shorter time frame than do slow-draining foams. Consequently, more is not always better. The fire fighter has the ability to change the characteristics of the foam to meet different situations. This change of charac-

Copyright National Fire Protection Association
Provided by IHS under license with NFPA
No reproduction or networking permitted without license from IHS
Not for Resale

teristics can be accomplished by changing the mix ratio, the type or operating pressure of the foam hardware, or the application technique.

1.3.5 Mix ratio affects physical properties such as surface tension and the wetting ability of the foam solution. Mix ratios in the range of 0.1 to 1.0 percent significantly reduce surface tension values below that exhibited by water, resulting in improved coverage by the applied foam and wetting of the fuel.

1.3.6 Mix ratio also affects the characteristics of the foam produced with a given foam-generating system. The foam expansion and the drain time control where and how fast the foam solution is released to the fuel. Foam-generating systems that increase the amount of air captured within the foam solution generally result in greater expansion and slower drain times. Higher mix ratios generally increase the ease of obtaining more highly expanded foams with slower drain times, which decreases the rate of wetting and penetration.

Chapter 2 Referenced Publications

2.1 General. The documents or portions thereof listed in this chapter are referenced within this guide and should be considered part of the recommendations of this document.

2.2 NFPA Publications. National Fire Protection Association, 1 Batterymarch Park, Quincy, MA 02169-7471.

NFPA 11, *Standard for Low-, Medium-, and High-Expansion Foam,* 2005 edition.

NFPA 1150, *Standard on Foam Chemicals for Fires in Class A Fuels,* 2004 edition.

NFPA 1901, *Standard for Automotive Fire Apparatus,* 2003 edition.

2.3 Other Publication. *Merriam-Webster's Collegiate Dictionary,* 11th edition, Merriam-Webster, Inc., Springfield, MA, 2003.

2.4 References for Extracts in Advisory Sections.

NFPA 1150, *Standard on Foam Chemicals for Fires in Class A Fuels,* 2004 edition.

NFPA 1901, *Standard for Automotive Fire Apparatus,* 2003 edition.

NFPA 1925, *Standard on Marine Fire-Fighting Vessels,* 2004 edition.

Chapter 3 Definitions

3.1 General. The definitions contained in this chapter apply to the terms used in this guide. Where terms are not defined in this chapter or within another chapter, they should be defined using their ordinarily accepted meanings within the context in which they are used. *Merriam-Webster's Collegiate Dictionary,* 11th edition, is the source for the ordinarily accepted meaning.

3.2 NFPA Official Definitions.

3.2.1* Authority Having Jurisdiction (AHJ). An organization, office, or individual responsible for enforcing the requirements of a code or standard, or for approving equipment, materials, an installation, or a procedure.

3.2.2 Guide. A document that is advisory or informative in nature and that contains only nonmandatory provisions. A guide may contain mandatory statements such as when a guide can be used, but the document as a whole is not suitable for adoption into law.

3.2.3* Listed. Equipment, materials, or services included in a list published by an organization that is acceptable to the authority having jurisdiction and concerned with evaluation of products or services, that maintains periodic inspection of production of listed equipment or materials or periodic evaluation of services, and whose listing states that either the equipment, material, or service meets appropriate designated standards or has been tested and found suitable for a specified purpose.

3.3 General Definitions.

3.3.1 Aspirate. To draw in air; nozzle-aspirating systems draw air into the nozzle to mix with the foam solution.

3.3.2 Batch Mix. The manual addition of foam concentrate to a water storage container or tank to make foam solution.

3.3.3 Bubble. The building block of foam composed of a film of fluid enclosing a volume of air.

3.3.4* Class A Foam. Foam for use on fires in Class A fuels. [**1150**, 2004]

3.3.5 Class A Fuel. Materials such as vegetation, wood, cloth, paper, rubber, and some plastics in which combustion can occur at or below the surface. [**1150,** 2004]

3.3.6* Compressed Air Foam System (CAFS). A foam system that combines air under pressure with foam solution to create foam in the hose or a mixing chamber.

3.3.7 Direct Attack. Fire-fighting operations involving the application of extinguishing agents directly onto the burning fuel.

3.3.8 Drain Time. The time that it takes for a specified percent (customarily 25 percent) of the total solution that is contained in the foam to revert to liquid and drain out of the bubble structure. [**1150**, 2004]

3.3.9 Eductor. A device that uses the Venturi principle to siphon a liquid into a water stream. The pressure at the throat is below atmospheric pressure, allowing liquid at atmospheric pressure to flow into the water stream. [**1925**, 2004]

3.3.10* Expansion Ratio. The ratio of the volume of the foam in its aerated state to the original volume of the nonaerated foam solution. [**1901**, 2003]

3.3.11 Exposure Protection. Application of an agent to uninvolved areas to limit absorption of heat to a level that will minimize damage and resist ignition, whether the source of heat is external or internal.

3.3.12 Fire Situation. Factors pertaining to a fire that affect decisions relating to fire suppression including but not limited to fuel types and geometry, fire characteristics and behavior, life safety hazard, type of structure, exposure, and weather.

3.3.13 Foam. The aerated solution created by forcing or entraining air into a foam solution by means of suitably designed equipment or by cascading it through the air at a high velocity.

3.3.13.1 ***High-Expansion Foam.*** Foams with expansion ratios ranging from 200:1 to approximately 1000:1.

3.3.13.2 ***Low-Expansion Foam.*** Foams with expansion ratios up to 20:1.

3.3.13.3 ***Medium-Expansion Foam.*** Foams with expansion ratios ranging from 20:1 to 200:1.

Copyright National Fire Protection Association
Provided by IHS under license with NFPA
No reproduction or networking permitted without license from IHS
Not for Resale

3.3.14 Foam Blanket. A covering of foam over the surface of combustible materials to prevent ignition or provide extinguishment.

3.3.15 Foam Concentrate. The foaming agent as received from the supplier that, when mixed with water, becomes foam solution.

3.3.16 Foam Proportioning System. The hardware and techniques used to mix concentrate with water to make foam solution.

3.3.17 Foam Solution. A homogeneous mixture of foam concentrate and water, in the mix ratio required for the application.

3.3.18 Foam System. A collection of equipment that, by various means, combines water and a controlled amount of foam concentrate into a foam solution and then aerates that solution.

3.3.18.1 ***High-Energy Foam System.*** A device or system that adds the energy of a pressurized air source to the energy of a pressurized water source to create foam.

3.3.18.2 ***Low-Energy Foam System.*** A device or system that uses only energy produced by the velocity of the water stream to create foam.

3.3.19 High-Energy Foam System. See 3.3.18.1

3.3.20 High-Expansion Foam. See 3.3.13.1.

3.3.21 Indirect Attack. Fire-fighting operations involving the application of extinguishing agents to reduce the buildup of heat released from a fire without applying the agent directly onto the burning fuel.

3.3.22 Low-Energy Foam System. See 3.3.18.2.

3.3.23 Low-Expansion Foam. See 3.3.13.2.

3.3.24 Medium-Expansion Foam. See 3.3.13.3.

3.3.25 Mix Ratio. The proportion of foam concentrate in the foam solution expressed as a volume percentage. [**1150**, 2004]

3.3.26 Mixing Chamber. A device used to mix foam solution and air.

3.3.27 Mop-up. See 3.3.28, Overhaul.

3.3.28 Overhaul. The final stages of fire extinguishment, following knockdown of the main body of fire, during which pockets of fire are sought out to complete extinguishment.

3.3.29 Proportioning Ratio. See 3.3.25, Mix Ratio.

3.3.30 scfm (standard cubic feet per minute). An expression of airflow rate in which the airflow rate is corrected to standard temperature and pressure.

3.3.31 Scrubbing. A process of agitating foam solution and air in a confined space such as a hose, pipe, or mixing chamber to produce bubbles.

3.3.32 Slug Flow. The discharge of distinct pockets of air and water or weak foam solution due to the insufficient or uneven mixing of foam concentrate, water, and air in a compressed air foam system (CAFS).

3.3.33 Surface Tension. The elastic-like force at the surface of a liquid, which tends to minimize the surface area, causing drops to form. [**1150**, 2004]

3.3.34 Wetting Ability. The ability of solution to penetrate and soak into a solid. [**1150**, 2004]

Chapter 4 Foam Properties and Characteristics

4.1 Foam Concentrate.

4.1.1 Acceptability. Only Class A foam concentrates that meet the requirements of NFPA 1150, as demonstrated by the results of testing conducted by a qualified independent laboratory, are acceptable for use in structural fire fighting.

4.1.2 Handling.

4.1.2.1 Storage.

4.1.2.1.1* Class A foam concentrates intended for immediate use in fire-fighting operations should be stored above 40°F (4°C). Concentrate not intended for immediate use can be stored in sealed containers for at least 1 year at ambient outdoor temperatures with no significant impact on performance. Storage for longer periods would not be expected to affect performance, but visual inspection and testing according to 4.1.4 should be conducted annually to confirm acceptability.

4.1.2.1.2 Class A foam concentrate should be stored in the containers in which it is received from the manufacturer. Alternative containers should be fabricated in accordance with the manufacturer's recommendations. Foam concentrates contain solvents that are susceptible to evaporation and should be stored in closed containers at all times.

4.1.2.2 Personal Protection.

4.1.2.2.1 The user should obtain a current material safety data sheet (MSDS) for the Class A foam concentrate and keep the sheet immediately available. All personnel should follow the manufacturer's recommendations on the product label and on the MSDS when handling and using the foam concentrate.

4.1.2.2.2 All personnel involved in handling foam concentrate should be trained with respect to the occupational safety and health and environmental impact issues associated with its use. Class A foam concentrates are generally irritating to both the eyes and skin. Personnel handling foam concentrates should wear protective clothing including eye protection and should avoid ingestion. Prolonged contact with concentrate should be avoided. Skin or eyes that come in contact with a concentrate should be rinsed and washed immediately. Freshwater should be available on site for this purpose. Individuals who have ingested a concentrate should seek medical attention as soon as possible. Clothing wetted with concentrate should be changed and washed. Soiled clothes should be cleaned on a daily basis. Showering is recommended as soon as possible after prolonged contact with concentrate.

4.1.2.3 Environmental Protection.

4.1.2.3.1 The user should consult and follow the current MSDS for the Class A foam concentrate.

4.1.2.3.2 Class A foam concentrates consist primarily of readily biodegradable surfactants. However, significant quantities of unrecovered foam concentrate can negatively affect the ecosystem and municipal water treatment operations.

4.1.2.3.3 When filling concentrate reservoirs, proper methods and equipment should be used to avoid water source contamination. Tanks should not leak, and operators should avoid overflow spills and discharge hose spills. All operations involving the handling of foam concentrate should be located so that concentrate does not come closer than 100 ft (30 m) to

Copyright National Fire Protection Association
Provided by IHS under license with NFPA
No reproduction or networking permitted without license from IHS
Not for Resale

bodies of water. Check valves should be provided to isolate and prevent backflow to water supplies.

4.1.2.3.4 Foam concentrate spills should be contained or absorbed, or both, and disposed of as required by the authority having jurisdiction (AHJ).

4.1.3 Compatibility. Different brands of Class A foam concentrates might be incompatible and should not be mixed. When changing from one brand to another, the operator should flush the system thoroughly with water to remove residual concentrate. Class A foam concentrates should not be mixed with Class B foam concentrates.

4.1.4* Inspection. Class A foam concentrate should be inspected visually for nonhomogeneity and the presence of crystals prior to use. In addition, the foaming properties of foam concentrate should be tested annually as described in A.4.1.4. If the concentrate contains crystals or is incapable of producing acceptable foam, the foam concentrate should be replaced.

4.2 Foam Solution.

4.2.1 Mix Ratio. The mix ratio of foam concentrate, as specified by NFPA 1150, is between 0.1 and 1.0 percent by volume. The mix ratio can be altered within this range, depending on the specific foam-generating hardware or system used, to create the desired foam properties, expansion ratio, and drain time, depending on the fuel and fire application.

4.2.2 Water. Water temperature and water quality have little effect on the surface tension or penetrating ability of foam solution. However, they can have an impact on foam generation and foam characteristics. *(See Section 4.3.)*

4.2.3 Handling. Most foam solutions are generated on demand. However, in some instances a batch or pre-mix system may be used. Storage time, contamination, and bacteria can significantly affect foam development. Biodegradability is a desirable characteristic of foam solutions. Because of biodegradation, storage for more than a few days may result in deterioration of foam properties.

4.2.3.1 Personal Protection.

4.2.3.1.1 The user should obtain a current MSDS for the Class A foam concentrate to be used. Any handling recommendations for foam solutions therein should be followed.

4.2.3.1.2 All personnel involved in handling, mixing, and applying foam solutions should be trained in the proper procedure with respect to occupational safety and health and environmental impact. All personnel should follow the manufacturer's recommendations on the product label and on the MSDS. Class A foam solutions are generally irritating to the eyes and skin. Prolonged contact with the solution should be avoided. As soon as practicable after contact occurs, the affected areas should be cleaned by rinsing or showering. Foam solution should not be ingested. If foam solution is ingested, the MSDS should be consulted for recommended treatment. Contaminated clothing should be changed and washed. Human health risk assessments are available and may be consulted for additional information. *(See Annex B.)*

4.2.3.2 Environmental Protection. The environmental impacts of foam solutions are less than those of foam concentrates *(see 4.1.2.3)*. However, foam solutions can have a detrimental impact on water quality, aquatic plants, fish, and other animals. Discharge of foam solution into natural waters or storm drains should be avoided whenever possible. Many factors are involved in determining the ultimate ecological impact of these chemicals. Environmental risk assessments are available and can be consulted for additional information. *(See Annex B.)*

4.2.4 Compatibility. Although Class A foam concentrates might not be compatible with each other, foam solutions prepared from different concentrate brands are rarely incompatible.

4.3 Foam.

4.3.1 Water Quality Impact. Water temperature and quality, including hardness, affect foam properties such as expansion ratio and drain time. Individual foam brands might behave differently in this regard, and their characteristics should be considered when a specific type of foam is desired. Although Class A foam solutions are normally prepared with freshwater, there are occasions when salt or brackish water is used. Because the characteristics of individual brands vary, foam development is likely to be affected. Therefore, the compatibility of specific brands with salt or brackish water should be predetermined.

4.3.2 Foam Type. Class A foams can be characterized by expansion ratio, drain time, and consistency. Class A foams can have significantly different fire extinguishment and exposure protection capabilities, depending on their expansion ratio and drain time. Because the type of foam used in fire-fighting operations has a major impact on its effectiveness, it is important to be able to identify the type of foam being produced and to understand which type of foam is needed for a given fire situation. For simplification, low-expansion Class A foams are generally described as one of three types: wet, fluid, or stiff. *(See Table 4.3.2.)* Three factors with major impact on foam type are mix ratio, the type of foam-generating system, and the operating parameters of that system. Other factors that affect foam type include water quality and temperature as well as atmospheric conditions such as humidity, temperature, and wind.

4.3.2.1 Wet Foam. Wet foam can range from a foam solution that has an expansion ratio of 1:1 (no expansion) and a 25 percent drain time of 0 seconds to a watery mass of large and small bubbles that lack body. Wet foams have an expansion ratio of ≤5:1 and a 25 percent drain time of ≤30 seconds. Wet foams can be used for direct and indirect fire attack. Wet foams are well suited for penetrating fuels, making them an ideal overhaul tool. Wet foams can be generated with all types of nozzles and systems.

4.3.2.2 Fluid Foam. Fluid foams have an appearance similar to watery shaving lather, with expansion ratios from 5:1 to 10:1, and 25 percent drain times of typically ≤90 seconds. Fluid foams can be used for direct and indirect fire attack. Fluid foams can be used to coat vertical and horizontal fuel surfaces to provide cooling for extinguishment and for short-term exposure protection. Fluid foams would typically be generated with aspirating nozzles or compressed air foam systems (CAFS).

4.3.2.3 Stiff or Dry Foam. Stiff foams have the appearance of shaving lather, expansion ratios greater than 10:1, and drain times greater than those of fluid foam. The structure of a stiff foam consists of uniform, small bubbles. Given the higher expansion ratios of stiff foam, the foam structure contains a large volume of air. The water contained in the foam is released very slowly. Stiff foams are ideally suited for exposure protection and blanketing operations, especially on vertical and inverted surfaces. Stiff foams are typically generated by a CAFS discharging through an open ball valve.

4.3.2.4 Medium- and High-Expansion Foam. Class A foam solutions with expansion ratios above 50:1 have not been evaluated and are likely to be of little operational effectiveness.

Copyright National Fire Protection Association
Provided by IHS under license with NFPA
No reproduction or networking permitted without license from IHS
Not for Resale

Table 4.3.2 Typical Foam Characteristics

	Foam Type				
Characteristic	**Wet Low-Expansion**	**Fluid Low-Expansion**	**Stiff or Dry Low-Expansion**	**Medium-Expansion**	**High-Expansion**
Expansion ratio	1–5	5–10	10–20	20–200	200–1000
Consistency	Watery, sloppy	Watery shaving lather, sloppy	Dry or stiff lather	Dry foam, medium to large bubbles	Very dry foam, large bubbles
25% Drain time (sec)	<30	30–90	90–120	120–300	>300
Generator	Nonaspirating, aspirating, CAFS	Aspirating, CAFS	CAFS	Large screened foam tubes	High-expansion generator
Tactic	Direct or indirect attack	Direct or indirect attack	Direct or indirect attack	Indirect attack	Indirect attack
Usage	Penetration, overhaul	⇔	Exposure protection, blanketing	Exposure protection, blanketing, fill voids, overhaul	Fill voids and spaces

4.3.3 Personal Protection. All personnel involved in applying foams should be trained to avoid occupational safety and health hazards and to understand fire-fighting tactics using Class A foams. All personnel should follow the manufacturer's recommendations on the product label and on the MSDS. Because foams can cause eye irritation and dryness of skin, personnel handling foam should wear protective clothing, including eye protection. They should avoid ingesting the foam.

4.3.4 Environmental Protection. The environmental concerns associated with foam are the same as those seen with foam solution. *(See 4.2.3.2.)*

Chapter 5 Hardware

5.1 General. When Class A foam is to be manually applied for structural fire fighting, the hardware used to produce it should comply with the applicable sections of this chapter. Class A foams can generally be applied with conventional structural fire-fighting equipment. However, Class A foam concentrates and solutions have detergent-like properties and can remove lubricants from equipment such as pumps, seals, valves, and nozzles that come in contact with them. The manufacturer of the foam concentrate or equipment should be consulted for recommended lubricants, packing materials, or both. For detailed information on foam proportioning and generating systems, see NFPA 1901.

5.2 Proportioning. Except for batch mixing, foam proportioning systems that operate in the range of 0.1 to 1.0 percent foam solutions are available at either variable or fixed proportioning rates. It is recommended that systems that allow both variable water flow rates and mix ratios be used for proportioning Class A foam solutions. *(See Table 5.2.)*

5.2.1 Batch Mixing. Batch mixing refers to a method where a calculated quantity of foam concentrate is manually added to a known quantity of water in a storage container or tank, with mild agitation, to prepare a uniform foam solution.

5.2.1.1 Water. Water for manual batch mixing should be transferred from the source to the mix tank in such a manner that backflow is prevented. For accurate proportioning, the water tank should be filled to capacity or to a predetermined volume.

5.2.1.2 Concentrate Storage. Class A foam concentrate should be stored in the original container or in containers that meet the recommendations of the manufacturer. Because foam concentrates evaporate, they should be stored in sealed containers. Intermixing of brands should be avoided.

5.2.1.3 Solution. Some mild agitation will generally be required to obtain a homogeneous foam solution. Minimal recirculation is generally sufficient. Violent agitation will cause excessive foam development within the mix tank and can result in overflowing, tank level gauge misreading, loss of pump prime, and so forth.

5.2.2 Manually Regulated Foam Proportioning System. A foam proportioning system that requires operator adjustment to maintain the mix ratio when there is a change of flow or pressure through the proportioner is referred to as a manually regulated foam proportioning system.

5.2.2.1 Adjustable In-Line Eductor. In an in-line eductor system, water is forced through a venturi in the eductor, creating a vacuum that allows foam concentrate to be drawn into the eductor at the mix ratio determined by the metering valve setting. In-line eductors are available in a configuration that allows the operator to bypass the venturi to supply plain water. When a bypass in-line eductor is used, the flow rate of the discharge nozzle can be different from the flow rate of the eductor. For other types of in-line eductors, the nozzle flow rate and the eductor flow rate must be the same. This flow rate should be taken into account when adjustable flow-rate nozzles with eductor systems are used. If incorrect mix ratios (from too rich to no concentrate at all) are to be avoided, adjustment by the operator may be required to compensate for changes in water flow. The eductor manufacturer's operational manual should be consulted for inlet pressure requirements and hose line and nozzle parameters. *(See Figure 5.2.2.1.)*

Copyright National Fire Protection Association
Provided by IHS under license with NFPA
No reproduction or networking permitted without license from IHS
Not for Resale

Table 5.2 Operating Characteristics of Proportioning Methods

Operating Characteristics	Manually Regulated Proportioning Methods			
	Manual Batch Mixing	**Adjustable In-Line Eductor**	**Intake-Side Regulator**	**Around-the-Pump Proportioner**
Unlimited hose length	X		X	X
Unlimited number of hose lines	X		X	X
Easily adjusted mix ratios			X	X
No moving parts	X	X	X	X
No loss in water flow or pressure	X		X	
Introduces foam concentrate into water tank	X		X	X
Potential loss of pump prime and/or cavitation	X		X	X
Potential discontinuity of foam supply	X			
Potentially inconsistent mix ratio	X	X	X	X
Potential solution degradation during storage	X			
Specific water flow and pressure requirements		X		
Limited nozzle elevation		X		
Depends on pump vacuum			X	

Operating Characteristics	Automatically Regulated Proportioning Methods			
	Balanced-Pressure Bladder Tank	**Balanced-Pressure Pump**	**Electronically Controlled Direct Injection**	**Water-Powered Injection**
Maintain desired mix ratio despite changes in water flow and pressure	X	X	X	X
Unlimited hose length	X	X	X	X
Unlimited number of hose lines	X	X	X	X
Easily adjusted mix ratios	X	X	X	X
No moving parts	X			
No loss in water flow or pressure			X	
Potential discontinuity of foam supply	X			
Requires auxiliary power		X	X	

5.2.2.2 Intake Side Regulator. In an intake side regulator, vacuum created by the water pump draws foam concentrate directly into the pump intake. The regulator requires adjustment to compensate for changes in water flow. Refer to the manufacturer's operational recommendations for accurate use and system limitations. *(See Figure 5.2.2.2.)*

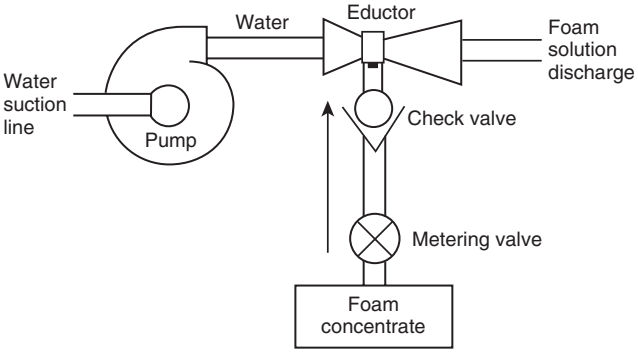

FIGURE 5.2.2.1 Adjustable In-Line Eductor. *(Reprinted courtesy of National Wildfire Coordinating Group.)*

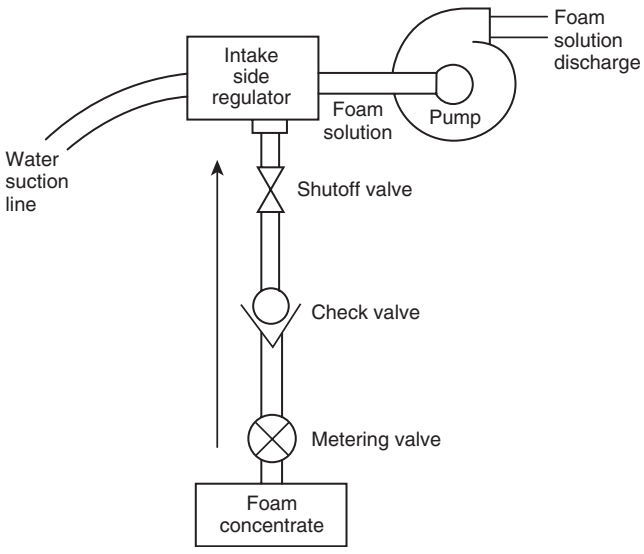

FIGURE 5.2.2.2 Intake Side Regulator. *(Reprinted courtesy of National Wildfire Coordinating Group.)*

Copyright National Fire Protection Association
Provided by IHS under license with NFPA
No reproduction or networking permitted without license from IHS
Not for Resale

5.2.2.3 Around-the-Pump Proportioner. In this system, an eductor is installed between the water pump discharge and the intake. A small flow of water from the water pump discharge passes through the eductor, creating a vacuum that causes foam concentrate to be drawn into the eductor and discharged into the pump intake. The around-the-pump proportioner requires adjustment by the operator to compensate for changes in water flow and pressure. *(See Figure 5.2.2.3.)*

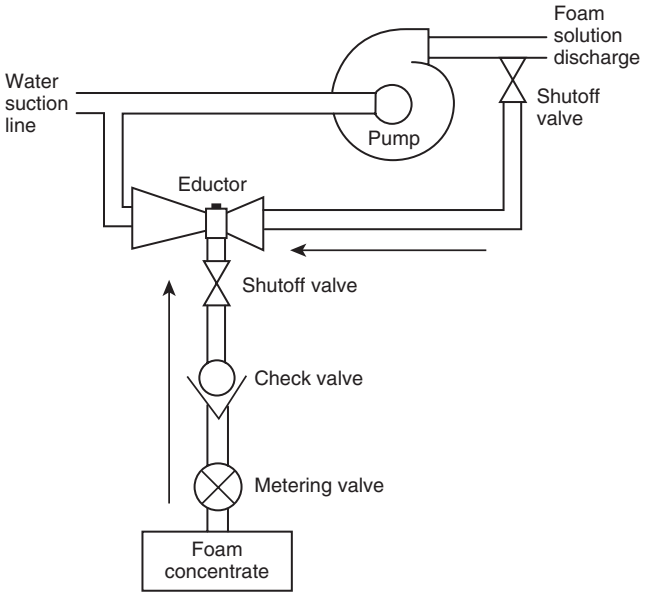

FIGURE 5.2.2.3 Around-the-Pump Proportioner. *(Reprinted courtesy of National Wildfire Coordinating Group.)*

5.2.3 Automatically Regulated Foam Proportioning System. An automatically regulated foam proportioning system automatically adjusts the amount of foam concentrate proportioned into the water to maintain the desired mix ratio. These automatic adjustments are made based on changes in water flow, water pressure, or solution conductivity. Some of these systems are able to proportion foam concentrate into single- or multiple-discharge outlets without adjustment.

5.2.3.1 Balanced-Pressure Bladder Tank System. The balanced-pressure bladder tank system uses a small diversion of water to pressurize a tank containing a bladder filled with foam concentrate. The concentrate is forced from the bladder and passes through a metering valve before it enters the water stream on the low-pressure side of a pressure differential valve. As differences in pressure occur due to water flow rate changes, foam concentrate flow adjusts automatically. *(See Figure 5.2.3.1.)*

5.2.3.2 Balanced-Pressure Pump System. The balanced-pressure pump system senses water pressure and activates a pilot-operated relief or diaphragm valve. The pressure of the pumped concentrate is automatically regulated and supplied through a venturi in the water line. *(See Figure 5.2.3.2.)*

5.2.3.3 Electronically Controlled Direct-Injection System. The electronically controlled proportioner adds concentrate based on measured water flow or solution conductivity. One or more in-line sensors signal a microprocessor that automatically commands a pump to deliver concentrate into the water stream at the desired mix ratio. *(See Figure 5.2.3.3.)*

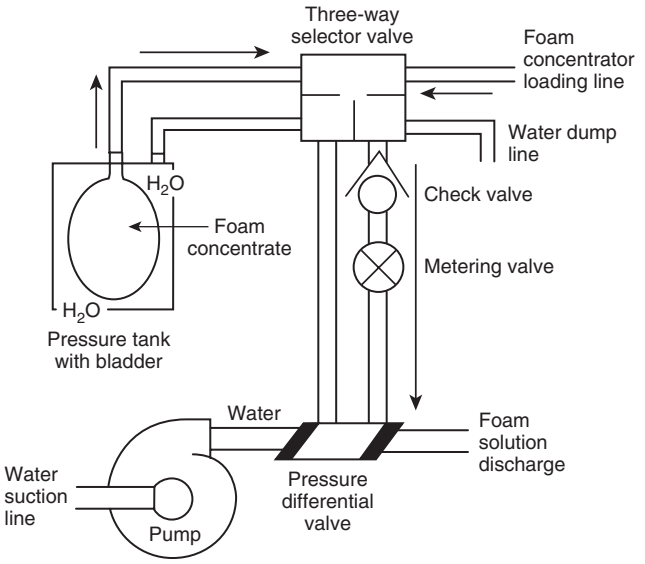

FIGURE 5.2.3.1 Balanced-Pressure Bladder Tank System. *(Reprinted courtesy of National Wildfire Coordinating Group.)*

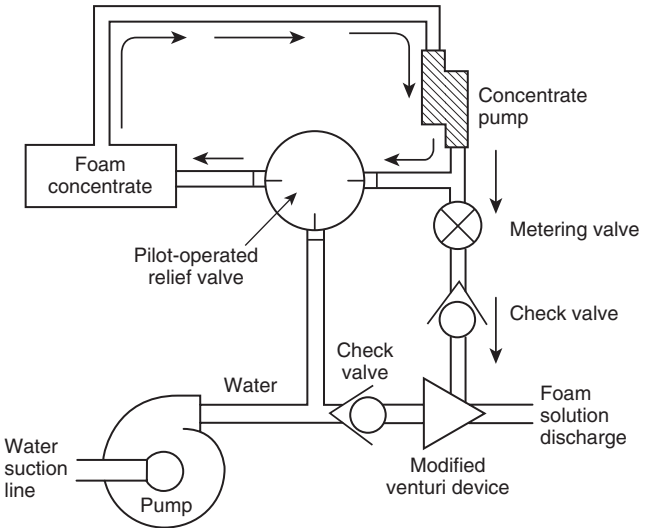

FIGURE 5.2.3.2 Balanced-Pressure Pump System. *(Reprinted courtesy of National Wildfire Coordinating Group.)*

5.2.3.4 Water-Powered Injection System. In a water-powered injection system, a water motor drives a concentrate pump. The speed of the concentrate pump is directly proportional to the water flow through the system and automatically delivers concentrate at the desired mix ratio.

5.3 Foam Generation and Discharge. Class A foam can be applied with any discharge device. Discharge systems (both low- and high-energy) are discussed in 5.3.1 through 5.3.2.1.2. The user should choose the most appropriate device to meet the objective of each application.

5.3.1 Low-Energy Foam Systems. Several different low-energy foam systems are available to generate and deliver foam.

--`,,```,-`-`,,`,,`,`,,`---

Copyright National Fire Protection Association
Provided by IHS under license with NFPA
No reproduction or networking permitted without license from IHS
Not for Resale

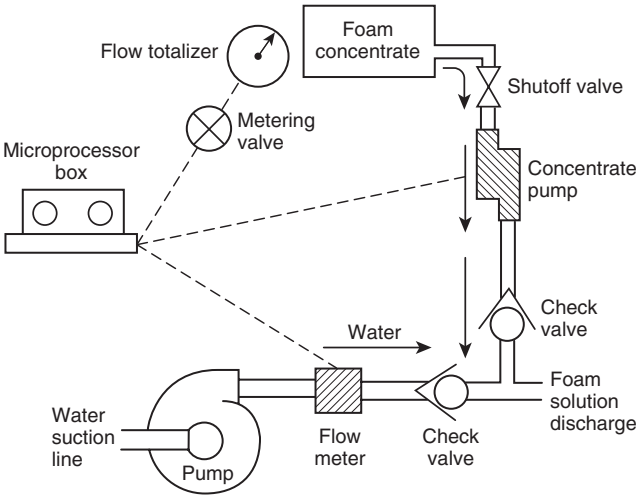

FIGURE 5.2.3.3 Electronically Controlled Direct-Injection System. *(Reprinted courtesy of National Wildfire Coordinating Group.)*

5.3.1.1 Nonaspirating-Type Nozzles. Class A foam solution can be applied with any type of nonaspirating nozzle — for example, a smooth-bore nozzle or a combination (spray and straight stream) nozzle. When using adjustable flow rate nozzles with manually regulated foam proportioning systems, changing the nozzle flow rate may require adjustment to the proportioner to keep the foam consistency constant. If not adjusted, the foam proportioning system might be rendered inoperable. Application is made using standard water-only techniques at typical concentrations of 0.2 to 0.5 percent. These types of nozzles produce a wet foam that is most effectively used for direct and indirect attack and overhaul.

5.3.1.2 Aspirating-Type Nozzles. Aspirating nozzles entrain air into the foam solution stream. Such nozzles generally produce higher expansion ratios than nonaspirating nozzles. Many designs are available to users who are pursuing the desired foam expansion ratio at the greatest discharge distance. In general, nozzles designed for greater discharge distance produce relatively low-expansion-ratio foam, while those designed for increased expansion ratios have shorter discharge distances.

5.3.1.2.1 Low-Expansion Nozzles. Low-expansion nozzles develop expansion ratios up to 20:1. However, at 0.1 to 1.0 percent mix ratios, foam with expansion ratios greater than 10:1 are rarely obtained. Low-expansion nozzles produce wet or fluid foam that is most effectively used for exposure protection, direct attack, and overhaul. Most low-expansion nozzles result in a fixed straight stream discharge that offers little to no margin of safety from radiant heat in an interior application. For this reason, a low-expansion, single-function nozzle or low-expansion attachment is not recommended for interior attack. The various types of low-expansion aspirating nozzles are illustrated in Figure 5.3.1.2.1(a) through Figure 5.3.1.2.1(e).

5.3.1.2.2 Medium-Expansion Nozzles. Although it is unlikely that expansion ratios greater than 50:1 can be achieved with Class A foam solutions, medium-expansion foam nozzles can be used with these solutions. Medium-expansion nozzles are designed to develop foam expansion ratios between 20:1 and 200:1. These nozzles have larger-diameter foam tubes than low-expansion nozzles and often employ a screen at the end of the tube. They are also limited to relatively short discharge distances. Medium-expansion foam is useful in blanketing operations. It is most effectively used for overhaul and exposure protection. Some nozzles and nozzle attachments are available that produce either low- or medium-expansion foams. See NFPA 11 for more information.

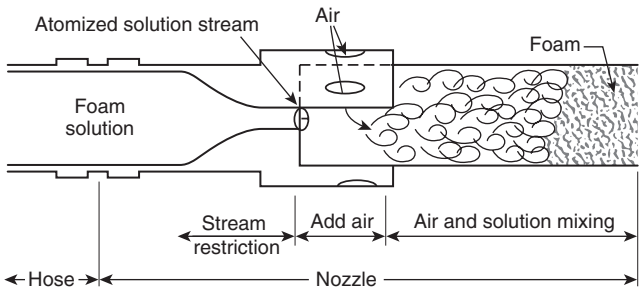

FIGURE 5.3.1.2.1(a) Single-Function Foam Device.

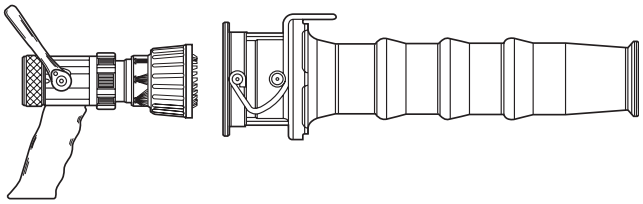

FIGURE 5.3.1.2.1(b) Combination Nozzle with Low-Expansion Foam Attachment.

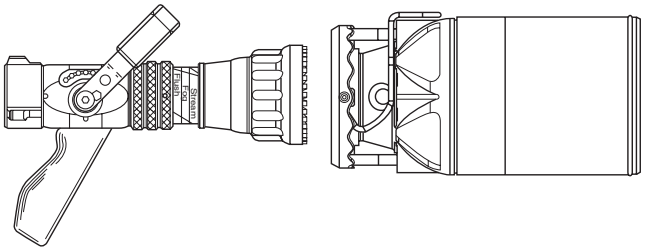

FIGURE 5.3.1.2.1(c) Combination Nozzle with Multi-Expansion Foam Attachment.

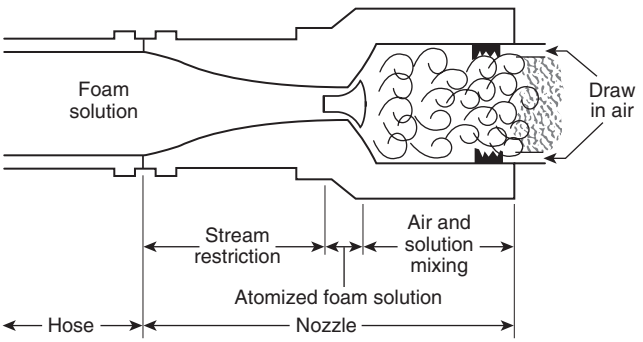

FIGURE 5.3.1.2.1(d) Multifunction Foam Device.

Copyright National Fire Protection Association
Provided by IHS under license with NFPA
No reproduction or networking permitted without license from IHS
Not for Resale

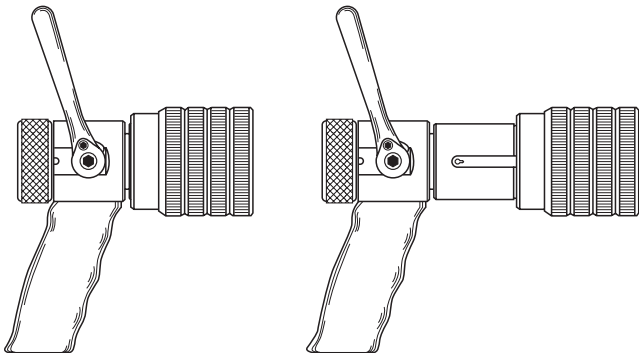

FIGURE 5.3.1.2.1(e) Combination Nozzle with Retractable Sleeve.

5.3.1.2.3 High-Expansion Generators. This equipment and associated methods are generally limited to fires in confined spaces. There has been very little experience in the use of high-expansion foam generators with Class A foam solutions. The discharge characteristics of the high-expansion equipment should be verified by actual tests. See NFPA 11 for more information.

5.3.1.3 Fire Hose. Typically, hose used by the fire service for the delivery of water is appropriate for use with low-energy foam systems. Hydraulic calculations used for flowing foam solution are essentially the same as for flowing water.

5.3.2 High-Energy Foam System. The only high-energy foam system currently in use is the compressed air foam system (CAFS).

5.3.2.1* Compressed Air Foam System. A CAFS is a foam generation and delivery system that combines air under pressure with foam solution to create foam in the hose or mixing chamber. See 5.3.2.1.2 for the impact of hose on foam generation. A CAFS consists of a pressurized air source, a source of foam solution (water pump and proportioner), and a means to apply the foam (hose and nozzle). A CAFS allows the operator to control three elements of foam production: water, foam concentrate, and compressed air.

5.3.2.1.1 Nozzles. The choice of nozzle depends on how the foam is to be applied and the type of foam desired. Conventional and variable pattern (combination) nozzles, wands, and other attachments are compatible with CAFS. Typically, a full flow ball valve or smooth bore nozzle is used to discharge CAFS foam. The larger the discharge opening, the drier the CAFS foam. Other nozzle types, such as combination nozzles, will remove air from the foam, resulting in discharge of a wetter foam with reduced range. This capability can be used to advantage to break the bubble structure of the foam and create a foam solution for rapid penetration. Variable-pattern nozzles allow CAFS foam to be discharged in protective fog patterns.

5.3.2.1.2 Fire Hose. Hose used by the fire service for the delivery of water is appropriate for use with CAFS. Hose length and liner surface affect foam characteristics. Since most CAFS do not have a mixing chamber or other in-line mixer, they depend on friction between the foam solution and the hose liner to mix foam solution and air. Fire hose filled with CAFS foam weighs less than hose filled with foam solution or water but will kink more readily than water-filled hose. Kinking and length of hose can cause changes in foam quality and flow rate.

5.4 Check Valves. Check valves should be provided to isolate and prevent backflow of foam solution to water supplies, system supply reservoirs, and pumps.

Chapter 6 Foam Operations

6.1 General.

6.1.1 This chapter provides guidelines on the selection of foam characteristics *(see 4.3.2)* for various fire situations, use of foam during fire fighting, and post-incident system maintenance. In most situations, fire-fighting techniques are similar for both Class A foam and water attack. However, Class A foam has greater versatility in certain situations. The proper selection of foam characteristics and application technique varies depending on resources, fire situation, material to be protected, and time available.

6.1.2 Consistency and frequency of training is vital to the establishment of application proficiency and fire fighter safety. Prior to using Class A foam in a fire situation, fire fighters should develop practical knowledge of its applications and limitations.

6.2 Selection of Foam Characteristics and Application Techniques. The selection of foam characteristics *(see 4.3.2)* varies depending on the fire situation. Foam solution flow rates and hose sizes for any given fire should be the same as the generally accepted flow rates and hose sizes for plain water. A combination of the various foam characteristics might be of particular benefit depending on the fire situation. The mix ratio necessary to produce the desired foam characteristics varies depending on several factors such as system design, temperature, operating parameters, and water quality. The concentrate and hardware manufacturers' instructions should be consulted for guidelines in this regard.

6.2.1 Exterior Structure Fire.

6.2.1.1 Direct Attack. When a direct attack is made on the exterior of an involved structure, knockdown through cooling of fuels is a primary consideration. A wet- or fluid-type foam should be used in the same manner as water. When a low-energy foam system is used, a nonaspirating combination nozzle is recommended for reach, penetration, and pattern adjustments. Aspirating nozzles or attachments can be used, but they will not allow pattern adjustment and will reduce the range of stream. When a high-energy foam system (CAFS) is used, the system should be adjusted to provide a wet foam. A combination nozzle can be used to provide a protective fog pattern, though reach and foam quality might be diminished.

6.2.1.2 Overhaul. During overhaul, primary consideration should be given to surface penetration and cooling of involved fuels. The choice of foam characteristics for overhaul should be varied depending on the geometry of the fuel that is being cooled. Penetration of the involved fuels will best be accomplished with foam solution or wet foam. Starting with either foam solution or a wet foam to cover the burned material is recommended, followed by change to a dry foam. The dry foam will release water/solution over a prolonged period of time. It also aids in locating hidden hot spots. Any trapped heat will cause the foam bubbles to enlarge, and steam will rise from the spot. If voids or cavities exist, filling them with a low-expansion stiff or medium-expansion foam might be desirable. This procedure does

Copyright National Fire Protection Association
Provided by IHS under license with NFPA
No reproduction or networking permitted without license from IHS
Not for Resale

not alter the need to follow conventional overhaul practices. A low- or medium-expansion aspirating nozzle can be used with a low-energy foam system to create a stiff or dry foam. Mix ratio, nozzle operating pressures, or both might have to be altered to produce dry foam. High-energy dry foam can be produced by increasing the air-to-solution ratio, the mix ratio, or both. Generally, the largest diameter discharge device available should be used (e.g., smooth bore nozzle, open ball valve).

6.2.1.3 Exposure Protection. To provide exposure protection for untreated wood and other absorbing surfaces, such as vegetation or canvas, initial consideration should be given to raising the moisture content of the exposure with an application of wet foam, followed by a blanketing of the exposed surface with a dry foam to provide increased resistance to ignition. The dry foam will release water/solution over a prolonged period of time. Blanketing of the exposed surface with a dry foam is recommended to provide exposure protection for nonabsorbing surfaces, such as vinyl, metal, glass, painted wood, or fiberglass. Initial use of wet foam or water on the surface might reduce dry foam adhesion. A high-energy foam system can be particularly effective in this situation. A blanket of dry or stiff foam can be used to protect construction features and openings, such as in tile roofs, soffit or gable vents, and wooden decks, from ignition by embers. If blanketing capability is not available, exposure protection can be accomplished by the frequent application of a low-expansion wet or fluid foam to provide cooling and moisture penetration of the fuels. Re-application might be required to maintain exposure protection on all surfaces.

6.2.2 Interior Structure and Contents.

6.2.2.1 Direct Attack. During a direct attack inside an involved structure, knockdown through cooling of fuels is a primary consideration. A wet or fluid foam should be used in the same manner as water. When a low-energy foam system is used, a nonaspirating combination nozzle is recommended for reach, penetration, and pattern adjustments. Aspirating nozzles or attachments should not be used, as they do not provide for pattern adjustment for personnel protection and will reduce the range of the stream. When a high-energy foam system (CAFS) is used, it should be adjusted to provide a wet foam. A combination nozzle should be used to provide a protective fog pattern, though reach and foam quality might be diminished.

6.2.2.2 Indirect Attack. During an indirect attack on a fire within a structure, rapid cooling of products of combustion is the primary consideration. A wet or fluid foam should be used in the same manner as water. Although any wet foam can be used, a wet foam produced by a compressed air foam system might be more effective due to increased reach and faster knockdown. When a low-energy foam system is used, a nonaspirating combination nozzle is recommended for reach, penetration, and pattern adjustments. Aspirating nozzles or attachments do not provide for pattern adjustment for personnel protection and will reduce the range of the stream. When indirect attack is made from the outside through doorways, windows, or other openings, either an aspirating or nonaspirating nozzle can be used. When a high-energy foam system (CAFS) is used within a structure, the system should be adjusted to provide a wet foam. A conventional combination nozzle should be used to provide a protective fog pattern, though reach and foam quality might be diminished. When an indirect attack is made from the outside, a smooth-bore nozzle will deliver superior foam.

6.2.2.3 Heat and Ventilation. Class A foam might achieve knockdown more rapidly than water. Because temperature reduction depends primarily on the quantity of water applied, compartment temperatures will likely remain higher if foam is used rather than water. When life safety concerns exist, it might be advisable to continue flows after knockdown to further cool the interior. Active and aggressive ventilation should be considered by the incident commander at every stage of fireground operations.

6.2.2.4 Overhaul. During overhaul, primary consideration should be given to surface penetration and cooling of involved fuels. The choice of foam characteristics used for overhaul should be varied depending on the geometry of the fuel being cooled. Penetration of the involved fuels is best made with a wet foam. Starting with a wet foam to soak and penetrate the burned material is recommended, followed by a dry foam to blanket the material. The dry foam will release water/solution over a prolonged period of time. It also aids in penetrating hidden hot spots. Any trapped heat will cause the foam bubbles to enlarge, and steam will rise from the spot. If voids or cavities exist, filling them with a low-expansion stiff or medium-expansion foam might be desirable. This procedure does not alter the need to follow conventional overhaul practices.

6.2.3 Open Storage and Refuse. Class A foam can be used to advantage in the suppression of fires involving log decks, rubber tires, pallets, landfills, rubbish containers, and other Class A materials stored in the open.

6.2.3.1 Direct Attack. When a direct attack is made on open storage or refuse, knockdown through cooling of fuels is a primary consideration. A wet or fluid foam should be used in the same manner as water. When a low-energy foam system is used, a nonaspirating conventional nozzle is recommended for reach, penetration, and pattern adjustments. Aspirating nozzles or attachments can be used, but they do not allow pattern adjustment and will reduce range of stream. When a high-energy foam system (CAFS) is used, the system should be adjusted to provide a wet foam. A conventional combination nozzle can be used to provide a protective fog pattern, though reach and foam quality may be diminished.

6.2.3.2 Overhaul. During overhaul, primary consideration should be given to surface penetration and cooling of involved fuels. The choice of foam type used for overhaul should be varied depending on the geometry of the fuel being cooled. Penetration of the involved fuels is best made with a wet foam. Consideration should be given to the use of penetrating-type nozzles to provide improved foam distribution within the fuel. Starting with a wet foam to soak and penetrate the burned material is recommended, followed by a change to a dry foam to blanket the material. The dry foam will release water/solution over a prolonged period of time. It will also aid in locating hidden hot spots. Any trapped heat will cause the foam bubbles to enlarge and steam will rise from the spot. If voids or cavities exist, filling them with a low-expansion stiff or medium-expansion foam might be desirable. This procedure does not alter the need to follow conventional overhaul practices.

6.2.3.3 Exposure Protection. To provide exposure protection for untreated wood and other absorbing surfaces, such as vegetation or canvas, initial consideration should be given to raising the moisture content of the exposure with an application of wet foam, followed by a blanketing of the exposed surface

Copyright National Fire Protection Association
Provided by IHS under license with NFPA
No reproduction or networking permitted without license from IHS
Not for Resale

with a dry foam to provide increased resistance to ignition. The dry foam will release water/solution over a prolonged period of time. Blanketing of the exposed surface with a dry foam is recommended to provide exposure protection for nonabsorbing surfaces, such as vinyl, metal, glass, painted wood, or fiberglass. Initial use of wet foam or water on the surface might reduce dry foam adhesion. A high-energy foam system can be particularly effective in this situation. A blanket of dry or stiff foam can be used to protect construction features and openings, such as in tile roofs, soffit or gable vents, and wooden decks, from ignition by embers. If blanketing capability is not available, exposure protection can be accomplished by the frequent application of a low-expansion wet or fluid foam to provide cooling and moisture penetration of the fuels. Re-application might be required to maintain exposure protection on all surfaces.

6.2.4 Vehicles and Other Mobile Properties. The application of Class A foam on fires involving motor vehicles, trailers, cargo containers, train cars, recreational vehicles, mobile homes, boats, and other mobile properties should be identical to those used on structures. If voids or cavities exist, filling them with a low-expansion stiff foam or a medium-expansion foam might be desirable. Consideration should be given to the use of penetrating-type nozzles to provide improved foam distribution within the fuel. Care should be taken in the attack of vehicle fires or other fires where incidental Class B fuels are present, due to the potential for flashback when flammable liquid fires are knocked down with Class A foam. Class A foams should not be used on combustible metal and electrical fires.

6.3 Operator Information.

6.3.1 Operators should be aware that foam system design and components, such as mixing chambers, plumbing, and eductors, can result in additional friction loss, which could affect fireground hydraulic calculations.

6.3.2 The foam-generating system should be tested and calibrated according to the manufacturer's recommendations. Additional information on testing can be found in NFPA 1901, *Standard for Automotive Fire Apparatus*.

6.4 Routine and Post-Incident System Maintenance. Maintenance of the foam system should be performed on a routine basis and after each use in accordance with the manufacturer's recommendations.

6.4.1 The entire system should be flushed according to the manufacturer's recommendations. This flushing should be performed prior to leaving the scene or in accordance with the policies of the AHJ. Some agencies have found it convenient to perform this task during the last phase of overhaul to avoid unnecessary contamination of surrounding terrain.

6.4.2 Due to the potential for incompatibility, concentrate tanks should be cleaned according to the concentrate and/or hardware manufacturers' recommendations when a different Class A concentrate is introduced into the system. This cleaning should also be done whenever different concentrate is introduced during fire operations. Class A and B concentrates should not be mixed because of potential incompatibility or performance difficulties. If it is desired to use Class B foam concentrate in a Class A concentrate tank, or vice versa, extra care should be taken to avoid contamination of the two concentrates.

6.4.3 When operations have been completed, areas where concentrate has been handled should be examined for evidence of spillage. Any spilled concentrate and all empty containers should be collected and disposed of properly. *(See 4.1.2.3.4.)*

6.5 Post-Incident Documentation. The incident report should reflect the use of Class A foam including the amount of concentrate used, the mixing ratios, the brand, and the specific location of use. During cause and origin investigations, the use of Class A foam should be noted, because some components of Class A foam concentrate might mask or mimic accelerants.

Chapter 7 Operational Safety

7.1 General. Fire-fighting safety requires training prior to the incident and coordination of all emergency responders on the fire site. Foam concentrates are similar in composition to common household detergents and shampoos. However, some safety considerations should be noted because of the prolonged exposure and large volumes that are used in fire-fighting applications. Class A foam solutions used in fire fighting are at least 99 percent water. The remaining 1 percent contains surfactants and other functional components. The manufacturer's MSDS should be referred to for recommendations and information about the specific foam to be used. The MSDS should be readily available to operators of vehicles carrying Class A foam concentrate.

7.2 Working Conditions.

7.2.1 Personal Protective Equipment. When concentrates are handled, splashproof eye protection and waterproof gloves and boots (rubber or plastic) should be worn. Personal protective equipment is further discussed in 4.1.2.2, 4.2.3.1, and 4.3.3.

7.2.2 Visibility. Foam on the fireground can mask weak and damaged floors and other hazards. Vision can be obscured or obstructed by foam on vehicle windshields, face shields, SCBA masks, thermal imaging cameras, or eye protection.

7.2.3 Footing. Foam concentrates, foam solutions, and foam itself can be slippery. Caution should be exercised when moving about firegrounds on which foam or foam-related products have been used.

7.2.4 Electronic Equipment. Due to the reduced surface tension of foam solutions, watertight enclosures might leak, and the equipment may be damaged and cease to operate.

7.2.5 Electrical Hazards. The same electrical shock hazards exist when Class A foam is used as when water is used.

7.2.6 Nozzles. As is the case when working with water, care should be taken during the opening and closing of pressurized valves when using Class A foam.

7.2.7 Heat and Ventilation. Class A foam might achieve knockdown more rapidly than water. Because temperature reduction depends primarily on the quantity of water applied, compartment temperatures will likely remain higher if foam is used rather than water. When life safety concerns exist, it might be advisable to continue flows after knockdown to further cool the interior. Active and aggressive ventilation should be considered by the incident commander at every stage of fireground operations.

--`,,```,,-`-`,,`,,`,`,,`---
Copyright National Fire Protection Association
Provided by IHS under license with NFPA
No reproduction or networking permitted without license from IHS
Not for Resale

7.2.8 Medium- and High-Expansion Foam Considerations. The discharge of large amounts of medium- and high-expansion foam might inundate personnel, thereby blocking vision, making hearing difficult, creating some discomfort in breathing, and causing spatial disorientation. The breathing discomfort will increase with a reduction in expansion ratio of the foam.

7.2.9 High-Energy (CAFS) Considerations. High-energy foam systems create some safety issues unique to their operation. Personnel using CAFS should receive training in proper operation of the pumping system and handling of the hose and nozzle. With the additional consideration of the foam proportioner and air compressor, the pump operator's responsibility to provide the appropriate foam to the nozzle includes more than operation of the water pump. Foam generation in the hose depends on adequate foam concentrate and air being added to the water. Commonly accepted formulas for friction loss do not apply. Because compressed air foam is a compressible medium, water hammer does not occur in the shutting down of discharge devices.

7.2.9.1 Slug Flow. The continuity of foam production can be interrupted, resulting in slug flow for a number of reasons. Slug flow compromises effective discharge operations, nozzle control, and operator safety. To prevent slug flow, it is important to provide a continuous flow of a homogeneous mix of solution and air to create the appropriate foam type. Some of the factors that can create slug flow include interruption of foam solution supply and the inadequate mixing of air and foam solution.

7.2.9.2 Discharge Devices. The nozzle operator should understand the effect on nozzle reaction created by the compressed air in the hose. While a discharge device is closed, energy continues to build in the hose line. When the discharge device is opened, this built-up energy can create extreme nozzle reaction. The shutoff should be opened slowly, and the operator should stand with feet apart and a low center of gravity. A pistol grip ball shutoff is recommended for further stability and safety.

Annex A Explanatory Material

Annex A is not a part of the recommendations of this NFPA document but is included for informational purposes only. This annex contains explanatory material, numbered to correspond with the applicable text paragraphs.

A.3.2.1 Authority Having Jurisdiction (AHJ). The phrase "authority having jurisdiction," or its acronym AHJ, is used in NFPA documents in a broad manner, since jurisdictions and approval agencies vary, as do their responsibilities. Where public safety is primary, the authority having jurisdiction may be a federal, state, local, or other regional department or individual such as a fire chief; fire marshal; chief of a fire prevention bureau, labor department, or health department; building official; electrical inspector; or others having statutory authority. For insurance purposes, an insurance inspection department, rating bureau, or other insurance company representative may be the authority having jurisdiction. In many circumstances, the property owner or his or her designated agent assumes the role of the authority having jurisdiction; at government installations, the commanding officer or departmental official may be the authority having jurisdiction.

A.3.2.3 Listed. The means for identifying listed equipment may vary for each organization concerned with product evaluation; some organizations do not recognize equipment as listed unless it is also labeled. The authority having jurisdiction should utilize the system employed by the listing organization to identify a listed product.

A.3.3.4 Class A Foam. The foam bubbles and the solution draining from them attach to and penetrate Class A fuels due to the reduced surface tension imparted to the water by the foam concentrate. The bubbles hold moisture and release it as the foam breaks down, prolonging the time the moisture can be absorbed by the fuels. When applied in adequate quantities, the foam acts to exclude air from the fuel–air interface, envelop combustible vapors, and resist disruption due to wind, heat, and flame.

A.3.3.6 Compressed Air Foam System (CAFS). A CAFS consists of a pressurized air source, pressurized source of foam solution, and a means to apply the foam (hose, nozzle, turret, etc.). The pressurized air source could be an air compressor or a cylinder of compressed air. The foam solution could be from a pressurized tank of foam solution or from a water pump and foam proportioning system.

A.3.3.10 Expansion Ratio. The slang term "expansion" is often used in the field to mean expansion ratio.

A.4.1.2.1.1 Class A foam concentrates generally become thicker (more viscous) at cold temperatures. At temperatures below about 40°F (4°C), the thicker foam concentrates can be difficult to handle, transfer, and/or proportion. Although they will return to a usable condition when warmed, a quantity equivalent to one day's anticipated use should be stored at a temperature at which it can be used without difficulty.

A.4.1.4 The following procedures can be used to check the foam expansion ratio and drain time of a foam solution:

(1) Prepare a 1.0 percent foam solution by placing 10 mL of foam concentrate in a liter of the typical water that is available locally for fire fighting and mixing the solution thoroughly.
(2) Place 10 mL of the foam solution in a 100 mL stoppered, graduated cylinder having 1.0 mL graduations between the 0 and 10 mL marks. If the mixing in step (1) has agitated the solution into foam, let the foam drain back into solution before taking the 10 mL sample or be sure the 10 mL sample is only foam solution.
(3) Place the stopper in the graduated cylinder, and hold it in place with the thumb, as illustrated in Figure A.4.1.4. Shake the cylinder vigorously in a 90-degree arc in the manner shown until all the liquid is incorporated in the foam structure.
(4) Immediately after shaking, start a stopwatch and record the volume of foam and the volume of solution in the cylinder.
(5) Record the volume of drained solution in the bottom of the cylinder at 1-minute intervals for 5 minutes and then after 10 minutes and 15 minutes, or until such time that 2.5 mL of foam solution has drained from the foam.
(6) Calculate the foam expansion ratio by dividing the volume of foam recorded in step (4) by 10.
(7) Determine the 25 percent drain time by subtracting the volume of solution recorded in step (4) from the volume of drained solution recorded at each time interval in step (5) and extrapolating the data to determine the time when 2.5 mL of solution has drained from the foam.

Copyright National Fire Protection Association
Provided by IHS under license with NFPA
No reproduction or networking permitted without license from IHS
Not for Resale

(8) The test should be repeated at least three times using fresh foam solution for each test.
(9) The average of all expansion ratio values and the average of all drain time values should be calculated and each reported.

This test method was developed to provide the user or laboratory with a means of determining the foaming performance of concentrates and solutions. The test allows the user to examine any effects of different types of water or any effects of storage time or conditions on the foaming ability of concentrates or solutions. The user should note that, in practice, foam expansion ratios are dependent on mix ratio, water quality, and the system used to generate the foam. Increasing the mix ratio can be necessary to generate the desired foam consistency where consistency is affected by poor water quality, cold water, or degradation of concentrate or solution.

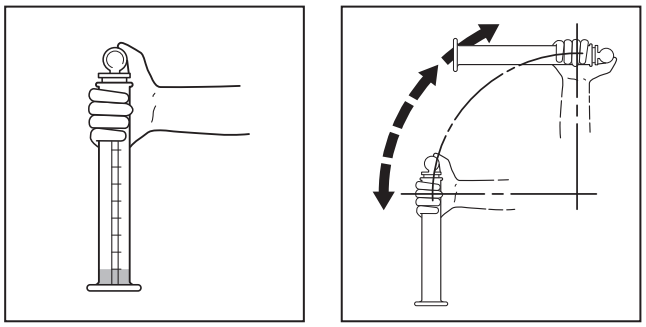

FIGURE A.4.1.4 Shaking Motion for Cylinder with Stopper in Place.

A.5.3.2.1 CAFS-generated foam can be used for interior and exterior attack (both direct or indirect), exposure protection, and overhaul. Unless specifically designed for the purpose, the use of standpipe systems or fixed aerial apparatus piping might be detrimental to the quality of the foam, the system, or both. Elevation differences between the nozzle and the pump or hose-lay length, or both, may impact the quality of the CAFS-produced foam. Radical changes in the flow direction or conduit diameter can adversely affect foam quality. The type of foam can be controlled by varying the mix ratio of concentrate to water, the ratio of airflow to solution flow, or both. Typical CAFS mix ratios are 0.2 to 0.5 percent foam concentrate and 0.5 to 3.0 scfm/gpm (air flow/solution flow). It is important for safety and effectiveness that a CAFS be designed to provide a homogeneous mix of solution and pressurized air to create the appropriate foam type for each fire-fighting situation. A CAFS has the capability of increasing the discharge distance of low-expansion foam at any given water flow rate due to the energy provided by the compressed air.

Annex B Informational References

B.1 Referenced Publications. (Reserved)

B.2 Informational References. The following documents or portions thereof are listed here as informational resources only. They are not directly referenced in this guide.

B.2.1 The following publications are available from the National Fire Protection Association, 1 Batterymarch Park, Quincy, MA 02169-7471.

NFPA 1001, *Standard for Fire Fighter Professional Qualifications*, 2002 edition.

NFPA 1051, *Standard for Wildland Fire Fighter Professional Qualifications*, 2002 edition.

B.2.2 The following publications are available from Fire Protection Publications, Oklahoma State University, Stillwater, OK 74078.

Principles of Foam Fire Fighting, 2nd ed., 2003.

Wildland Fire Fighting for Structural Firefighters, 4th ed., 2003.

B.2.3 The following U.S. Government Publications are available from the Program Leader, Wildland Fire Chemical Systems, U.S.D.A. Forest Service, 5785 Highway 10 West, Missoula, MT 59808.

"Chemicals Used in Wildland Fire Suppression: A Risk Assessment," Labat-Anderson Incorporated for U.S.D.A. Forest Service, Intermountain Fire Sciences Laboratory, July 1996.

"Human Health Risk Assessment: Wildland Fire-Fighting Chemicals." Labat-Anderson Incorporated for U.S.D.A. Forest Service, Missoula Technology and Development Center, January 22, 2003 (with March 6, 2003 revisions).

"Ecological Risk Assessment: Wildland Fire-Fighting Chemicals." Labat-Anderson Incorporated for U.S.D.A. Forest Service, Missoula Technology and Development Center, 2004.

Proceedings: International Wildland Fire Foam Symposium, 1994.

B.2.4 The following U.S. Government Publications are available from the National Interagency Fire Center, 3833 South Development Ave., Boise, ID 83705-5354.

Foam vs. Fire: Primer, National Wildfire Coordinating Group, NFES 2270,1992.

Foam vs. Fire: Class A Foam for Wildland Fires, National Wildfire Coordinating Group, NFES 2246, 1993.

Foam vs. Fire: Aerial Application, National Wildfire Coordinating Group, NFES 1845, 1995.

B.2.5 Additional Informational References.

Coletti, Dominic J., *Class A Foam — Best Practice for Structural Fire Fighters*, Lyons Publishing, Royersford, PA, 1998.

Coletti, Dominic J., and Davis, Larry, *Foam Firefighting Operations 1*, Essentials of Class A Foam — Awareness Level, Lyons Publishing, Royersford, PA, 2002.

Liebson, John, *Introduction to Class A Foams and Compressed Air Foam Systems for the Structural Fire Service*, International Society of Fire Service Instructors, Stafford, VA, Publication No. 0-929662-08-3.

NISTIR 6191, *Demonstration of Biodegradable, Environmentally Safe, Non-Toxic Fire Suppression Liquids*, National Institute of Science and Technology, July 1998.

B.2.6 Useful Web Sites.

National Fire Protection Association: www.nfpa.org

Firewise: www.firewise.org

U.S.D.A. Forest Service: www.fs.fed.us/fire/

B.3 References for Extracts in Informational Sections. (Reserved).

Copyright National Fire Protection Association
Provided by IHS under license with NFPA
No reproduction or networking permitted without license from IHS
Not for Resale

Index

© 2005 National Fire Protection Association. All Rights Reserved.

The copyright in this index is separate and distinct from the copyright in the document that it indexes. The licensing provisions set forth for the document are not applicable to this index. This index may not be reproduced in whole or in part by any means without the express written permission of NFPA.

-A-

Adjustable in-line eductors 5.2.2.1
Around-the-pump proportioners 5.2.2.3
Aspirate (definition) 3.3.1
Aspirating-type nozzles ..... *see* Nozzles
Authority having jurisdiction (definition) 3.2.1, A.3.2.1
Automatically regulated proportioning systems 5.2.3

-B-

Balanced-pressure bladder tank system 5.2.3.1
Balanced-pressure pump system 5.2.3.2
Batch mix
Definition 3.3.2
Hardware 5.2.1
Bubbles 1.3
Definition 3.3.3
Stiff or dry foam 4.3.2.3
Wet foam 4.3.2.1

-C-

CAFS ..... *see* Compressed air foam system (CAFS)
Check valves 5.4
Class A foam (definition) 3.3.4, A.3.3.4
Class A fuel 1.3
Definition 3.3.5
Compressed air foam system (CAFS) 5.3.2
Definition 3.3.6, A.3.3.6
Exterior structure fire 6.2.1.1
Fire hose 5.3.2.1.2
Interior structure fire 6.2.2.1, 6.2.2.2
Nozzles 5.3.2.1.1
Open storage and refuse fires 6.2.3.1
Operational safety 7.2.9
Slug flow 7.2.9.1
Definition 3.3.31

-D-

Definitions ..... Chap. 3
Direct attack
Definition 3.3.7
Exterior structure fires 6.2.1.1
Interior structure fires 6.2.2.1
Open storage and refuse fires 6.2.3.1
Direct-injection system, electronically controlled 5.2.3.3
Discharge devices, operational safety for 7.2.9.2
Drain time 1.3.2, 1.3.6, 4.2.1, 4.3.2
Definition 3.3.8
Fluid foam 4.3.2.2
Stiff or dry foam 4.3.2.3
Wet foam 4.3.2.1
Dry foam
Characteristics 1.3.2, 4.3.2.3
Exterior structure fires 6.2.1.2, 6.2.1.3
Interior structure fires 6.2.2.2, 6.2.2.4
Open storage and refuse fires 6.2.3.2, 6.2.3.3

-E-

Eductors
Adjustable in-line 5.2.2.1
Definition 3.3.9
Electrical hazards 7.2.5
Electronically controlled direct-injection system 5.2.3.3
Electronic equipment 7.2.4
Environmental protection
Foam 4.3.4
Foam concentrate 4.1.2.3
Foam solution 4.2.3.2
Expansion ratio 1.3.2, 1.3.6, 4.2.1, 4.3.2
Definition 3.3.10, A.3.3.10
Fluid foam 4.3.2.2
Stiff or dry foam 4.3.2.3
Wet foam 4.3.2.1
Exposure protection
Definition 3.3.11
Exterior structure fires 6.2.1.3
Open storage and refuse fires 6.2.3.3
Exterior structure fires 6.2.1
Direct attack 6.2.1.1
Exposure protection 6.2.1.3
Overhaul 6.2.1.2

-F-

Fire hose 5.3.1.3
Compressed air foam system (CAFS) 5.3.2.1.2
Fire situation 1.3.2
Definition 3.3.12
Fluid foam
Characteristics 1.3.2, 4.3.2.2
Exterior structure fires 6.2.1.1
Interior structure fires 6.2.2.1, 6.2.2.2
Open storage and refuse fires 6.2.3.1
Foam
Characteristics ..... Chap. 4
Definition 3.3.13
High-expansion 4.3.2.4
Definition 3.3.13.1
Generators 5.3.1.2.3
Operational safety 7.2.8
Low-expansion
Definition 3.3.13.2
Exterior structure fires 6.2.1.2
Interior structure fires 6.2.2.4
Nozzles 5.3.1.2.1, 6.2.1.2
Open storage and refuse fires 6.2.3.2
Medium-expansion 4.3.2.4
Definition 3.3.13.3
Exterior structure fires 6.2.1.2
Interior structure fires 6.2.2.4
Nozzles 5.3.1.2.2, 6.2.1.2
Open storage and refuse fires 6.2.3.2
Operational safety 7.2.8
Personal protection 4.3.3
Properties ..... Chap. 4
Types ..... 4.3.2; *see also* Dry foam; Fluid foam; Wet foam
Water quality impact 4.3.1
Foam blanket ..... 4.3.2.3; *see also* Dry foam
Definition 3.3.14
Exterior structure fires 6.2.1.3
Interior structure fires 6.2.2.4
Open storage and refuse fires 6.2.3.2, 6.2.3.3

Copyright National Fire Protection Association
Provided by IHS under license with NFPA
No reproduction or networking permitted without license from IHS
Not for Resale

Foam concentrate 4.1
Acceptability 4.1.1
Compatibility 4.1.3
Definition 3.3.15
Environmental protection 4.1.2.3
Handling 4.1.2
Inspection 4.1.4
Operational safety ..... Chap. 7
Personal protection 4.1.2.2, 4.1.2.2.2, 7.2.1
Storage 4.1.2.1, 4.1.2.1.2, 5.2.1.2
Foam operations ..... Chap. 6
Foam type selection and application techniques 6.2
Exterior structure fires 6.2.1
Interior structure fires 6.2.2
Open storage and refuse fires 6.2.3
Vehicles and other mobile properties 6.2.4
Maintenance 6.4
Other operator information 6.3
Post-incident documentation 6.5
Post-incident system maintenance 6.4
Foam proportioning systems
Automatically regulated 5.2.3
Definition 3.3.16
Hardware ..... *see* Hardware
Manually regulated 5.2.2
Foam solution 4.2
Compatibility 4.2.4
Definition 3.3.17
Environmental protection 4.2.3.2
Handling 4.2.3
Mix ratio 4.2.1
Personal protection 4.2.3.1
Proportioning hardware 5.2.1.3
Water 4.2.2
Foam system (definition) 3.3.18

-G-

Guide (definition) 3.2.2

-H-

Hardware ..... Chap. 5
Check valves 5.4
Fire hose 5.3.1.3
Foam generation and discharge 5.3
Compressed air foam systems (CAFS) 5.3.2.1, 5.3.2.1.2
High-energy foam systems 5.3.2
Low-energy foam systems 5.3.1
Proportioning 5.2
Automatically regulated systems 5.2.3
Batch mixing 5.2.1
Concentrate storage 5.2.1.2
Manually regulated systems 5.2.2
Methods, operating characteristics of ..... Table 5.2
Solution 5.2.1.3
Water 5.2.1.1
Heat and ventilation
Interior structure fires 6.2.2.3
Operational safety 7.2.7
High-energy foam systems ..... 5.3.2; *see also* Compressed air foam system (CAFS)
Definition 3.3.18.1
Exterior structure fires ..... 6.2.1.1 to 6.2.1.3
Interior structure fires 6.2.2.1, 6.2.2.2, 6.2.3.1
Open storage and refuse fires 6.2.3.3
High-expansion foam ..... *see* Foam, High-expansion
Hose ..... *see* Fire hose

-I-

Indirect attack
Definition 3.3.21
Interior structure fires 6.2.2.2
Injection systems
Direct, electronically controlled 5.2.3.3
Water-powered 5.2.3.4
Inspection 4.1.4
Intake side regulators 5.2.2.2
Interior structure fires 6.2.2
Direct attack 6.2.2.1
Heat and ventilation 6.2.2.3
Indirect attack 6.2.2.2
Overhaul 6.2.2.4

-L-

Listed (definition) 3.2.3, A.3.2.3
Low-energy foam systems
Definition 3.3.18.2
Exterior structure fires 6.2.1.1
Hardware, foam generation and discharge 5.3.1
Interior structure fires 6.2.2.1, 6.2.2.2, 6.2.3.1
Low-expansion foam ..... *see* Foam, Low-expansion

-M-

Maintenance 6.4
Manually regulated proportioning systems 5.2.2
Material safety data sheet (MSDS) 4.1.2.2.1, 4.1.2.3.1, 4.2.3.1.1, 4.2.3.1.2
Medium-expansion foam ..... *see* Foam, Medium-expansion
Mixing chamber (definition) 3.3.26
Mix ratio
Definition 3.3.25
Factors affecting 6.2
Foam solution ..... 1.3.4 to 1.3.6, 4.2.1, 5.2
Mobile properties, foam type selection and application techniques 6.2.4
Mop-up ..... *see* Overhaul

-N-

Nonaspirating-type nozzles ..... *see* Nozzles
Nozzles
Aspirating-type 5.3.1.2, 6.2.1.1, 6.2.1.2, 6.2.2.2, 6.2.3.1
Combination 6.2.1.1, 6.2.2.1, 6.2.2.2, 6.2.3.1
Compressed air foam system (CAFS) 5.3.2.1.1
Low-expansion 5.3.1.2.1, 6.2.1.2
Medium-expansion 5.3.1.2.2, 6.2.1.2
Nonaspirating-type 5.3.1.1, 6.2.1.1, 6.2.2.2, 6.2.3.1
Operational safety 7.2.6

-O-

Open storage and refuse fires 6.2.3
Direct attack 6.2.3.1
Exposure protection 6.2.3.3
Overhaul 6.2.3.2
Operational safety ..... Chap. 7
Overhaul
Definition 3.3.28
Exterior structure fires 6.2.1.2
Interior structure fires 6.2.2.4
Open storage and refuse fires 6.2.3.2

-P-

Personal protection 4.1.2.2, 4.1.2.2.2, 4.2.3.1, 4.3.3
Personal protective equipment 7.2.1
Proportioners, around-the-pump 5.2.2.3
Proportioning ratio ..... *see* Mix ratio
Purpose of guide 1.2

-R-

References ..... Chap. 2, Annex B
Refuse fires ..... *see* Open storage and refuse fires
Regulators, intake side 5.2.2.2

--`,,```,,-`-`,,`,,`,`,,`---

Copyright National Fire Protection Association
Provided by IHS under license with NFPA
No reproduction or networking permitted without license from IHS

Not for Resale

-S-

(scfm) Standard cubic feet per minute (definition) 3.3.30
Scope of guide 1.1
Scrubbing (definition) 3.3.31
Slug flow
Compressed air foam system (CAFS) 7.2.9.1
Definition 3.3.33
Stiff foam .....*see* Dry foam
Storage, of foam concentrate 4.1.2.1, 5.2.1.2
Storage, open .....*see* Open storage and refuse fires
Surface tension 1.3.5
Definition 3.3.32

-V-

Valves, check 5.4
Vehicles, foam type selection and application techniques 6.2.4
Ventilation
Interior structure fires 6.2.2.3
Operational safety 7.2.7

-W-

Water
Batch mixing hardware 5.2.1.1
Quality and temperature 4.2.2, 4.3.1
Water-powered injection system 5.2.3.4
Wet foam
Characteristics 1.3.2, 4.3.2.1
Exterior structure fires ..... 6.2.1.1 to 6.2.1.3
Interior structure fires 6.2.2.1, 6.2.2.2, 6.2.2.4
Open storage and refuse fires ..... 6.2.3.1 to 6.2.3.3
Wetting ability 1.3.5
Definition 3.3.34

Copyright National Fire Protection Association
Provided by IHS under license with NFPA
No reproduction or networking permitted without license from IHS
Not for Resale

Sequence of Events Leading to Publication of an NFPA Committee Document

Call goes out for proposals to amend existing document or for recommendations on new document.

▼

Committee meets to act on proposals, to develop its own proposals, and to prepare its report.

▼

Committee votes on proposals by letter ballot. If two-thirds approve, report goes forward. Lacking two-thirds approval, report returns to committee.

▼

Report — *Report on Proposals* (ROP) — is published for public review and comment.

▼

Committee meets to act on each public comment received.

▼

Committee votes on comments by letter ballot. If two-thirds approve, supplementary report goes forward. Lacking two-thirds approval, supplementary report returns to committee.

▼

Supplementary report — *Report on Comments* (ROC) — is published for public review.

▼

NFPA membership meets (Annual or Fall Meeting) and acts on committee report (ROP or ROC).

▼

Committee votes on any amendments to report approved at NFPA Annual or Fall Meeting.

▼

Appeals to Standards Council on Association action must be filed within 20 days of the NFPA Annual or Fall Meeting.

▼

Standards Council decides, based on all evidence, whether or not to issue standard or to take other action, including upholding any appeals.

Committee Membership Classifications

The following classifications apply to Technical Committee members and represent their principal interest in the activity of the committee.

M *Manufacturer:* A representative of a maker or marketer of a product, assembly, or system, or portion thereof, that is affected by the standard.

U *User:* A representative of an entity that is subject to the provisions of the standard or that voluntarily uses the standard.

I/M *Installer/Maintainer:* A representative of an entity that is in the business of installing or maintaining a product, assembly, or system affected by the standard.

L *Labor:* A labor representative or employee concerned with safety in the workplace.

R/T *Applied Research/Testing Laboratory:* A representative of an independent testing laboratory or independent applied research organization that promulgates and/or enforces standards.

E *Enforcing Authority:* A representative of an agency or an organization that promulgates and/or enforces standards.

I *Insurance:* A representative of an insurance company, broker, agent, bureau, or inspection agency.

C *Consumer:* A person who is, or represents, the ultimate purchaser of a product, system, or service affected by the standard, but who is not included in the *User* classification.

SE *Special Expert:* A person not representing any of the previous classifications, but who has a special expertise in the scope of the standard or portion thereof.

NOTES:

1. "Standard" connotes code, standard, recommended practice, or guide.
2. A representative includes an employee.
3. While these classifications will be used by the Standards Council to achieve a balance for Technical Committees, the Standards Council may determine that new classifications of members or unique interests need representation in order to foster the best possible committee deliberations on any project. In this connection, the Standards Council may make such appointments as it seems appropriate in the public interest, such as the classification of "Utilities" in the National Electrical Code Committee.
4. Representatives of subsidiaries of any group are generally considered to have the same classification as the parent organization.

Copyright National Fire Protection Association
Provided by IHS under license with NFPA
No reproduction or networking permitted without license from IHS
Not for Resale

NFPA Technical Committee Document Proposal Form

Note: All proposals must be received by 5:00 p.m. EST/EDST on the published proposal closing date.

For further information on the standards-making process, please contact Codes and Standards Administration at 617-984-7249. For technical assistance, please call NFPA at 617-770-3000.

FOR OFFICE USE ONLY
Log #: _____
Date Rec'd: _____

Please indicate in which format you wish to receive your ROP/ROC: ☐ **CD ROM** ☐ **paper** ☐ **download**
(Note: In choosing the download option you intend to view the ROP/ROC from our Website. No copy will be sent to you.)

Date 12/18/02 **Name** John B. Smith **Telephone** 617-555-1212
Company _____
Address 9 Seattle St. **City** Seattle **State** WA **Zip** 02255
Please indicate organization represented (if any) Fire Marshals Assn. of North America

1. **a) NFPA Document Title** National Fire Alarm Code
   b) NFPA No. & Edition NFPA 72, 2002 ed. **c) Section/Paragraph** 4.4.7.1.1

2. **Proposal Recommends:** *(check one)* ☐ **new text** ☐ **revised text** ☒ **deleted text**

3. **Proposal.** *(Include proposed new or revised wording, or identification of wording to be deleted.)* Note: Proposed text should be in legislative format, that is, use underscore to denote wording to be inserted (inserted wording) and strike-through to denote wording to be deleted (~~deleted wording~~). Delete exception.

4. **Statement of Problem and Substantiation for Proposal.** Note: State the problem that will be resolved by your recommendation. Give the specific reason for your proposal including copies of tests, research papers, fire experience, etc. If more than 200 words, it may be abstracted for publication. A properly installed and maintained system should be free of ground faults. The occurrence of one or more ground faults should be required to cause a "trouble" signal because it indicates a condition that could contribute to future malfunction of the system. Ground fault protection has been widely available on these systems for years and its cost is negligible. Requiring it on all systems will promote better installations, maintenance and reliability.

5. ☒ **This Proposal is Original Material.** Note: Original material is considered to be the submitter's own idea based on or as a result of his/her own experience, thought, or research and, to the best of his/her knowledge, is not copied from another source.

   ☐ **This Proposal is Not Original Material; Its Source** ***(if known)*** **is as Follows:** _____

Sample

I hereby grant the NFPA all and full rights in copyright to this proposal, and I understand that I acquire no rights in any publication of NFPA in which this proposal in this or another similar or analogous form is used.

Signature ***(Required)*** John B. Smith

PLEASE USE SEPARATE FORM FOR EACH PROPOSAL • NFPA FAX (617) 770-3500

Mail to: Secretary, Standards Council • NFPA • 1 Batterymarch Park • PO Box 9101 • Quincy, MA 02269-9101

--`,,```,,-`-`,,`,,`,`,,`---

Copyright National Fire Protection Association
Provided by IHS under license with NFPA
No reproduction or networking permitted without license from IHS

Not for Resale

NFPA Technical Committee Document Proposal Form

Note: All proposals must be received by 5:00 p.m. EST/EDST on the published proposal closing date.

For further information on the standards-making process, please contact Codes and Standards Administration at 617-984-7249. For technical assistance, please call NFPA at 617-770-3000.

FOR OFFICE USE ONLY
Log #: _____
Date Rec'd: _____

Please indicate in which format you wish to receive your ROP/ROC: ☐ **CD ROM** ☐ **paper** ☐ **download**
(Note: In choosing the download option you intend to view the ROP/ROC from our Website. No copy will be sent to you.)

Date _____ **Name** _____ **Telephone** _____
Company _____
Address _____ **City** _____ **State** _____ **Zip** _____
Please indicate organization represented (if any) _____

1. **a) NFPA Document Title** _____
   b) NFPA No. & Edition _____ **c) Section/Paragraph** _____

2. **Proposal Recommends:** *(check one)* ☐ **new text** ☐ **revised text** ☐ **deleted text**

3. **Proposal.** *(Include proposed new or revised wording, or identification of wording to be deleted.)* Note: Proposed text should be in legislative format, that is, use underscore to denote wording to be inserted (inserted wording) and strike-through to denote wording to be deleted (~~deleted wording~~). _____

4. **Statement of Problem and Substantiation for Proposal.** Note: State the problem that will be resolved by your recommendation. Give the specific reason for your proposal including copies of tests, research papers, fire experience, etc. If more than 200 words, it may be abstracted for publication. _____

5. ☐ **This Proposal is Original Material.** Note: Original material is considered to be the submitter's own idea based on or as a result of his/her own experience, thought, or research and, to the best of his/her knowledge, is not copied from another source.

   ☐ **This Proposal is Not Original Material; Its Source *(if known)* is as Follows:** _____

I hereby grant the NFPA all and full rights in copyright to this proposal, and I understand that I acquire no rights in any publication of NFPA in which this proposal in this or another similar or analogous form is used.

Signature *(Required)* _____

PLEASE USE SEPARATE FORM FOR EACH PROPOSAL • NFPA FAX (617) 770-3500

Mail to: Secretary, Standards Council • NFPA • 1 Batterymarch Park • PO Box 9101 • Quincy, MA 02269-9101

Copyright National Fire Protection Association
Provided by IHS under license with NFPA
No reproduction or networking permitted without license from IHS
Not for Resale