NFPA 1142

Standard on Water Supplies for Suburban and Rural Fire Fighting

2007 Edition

NFPA, 1 Batterymarch Park, Quincy, MA 02169-7471
An International Codes and Standards Organization

Copyright National Fire Protection Association
Provided by IHS under license with NFPA
No reproduction or networking permitted without license from IHS

Not for Resale

IMPORTANT NOTICES AND DISCLAIMERS CONCERNING NFPA DOCUMENTS

NOTICE AND DISCLAIMER OF LIABILITY CONCERNING THE USE OF NFPA DOCUMENTS

NFPA codes, standards, recommended practices, and guides, of which the document contained herein is one, are developed through a consensus standards development process approved by the American National Standards Institute. This process brings together volunteers representing varied viewpoints and interests to achieve consensus on fire and other safety issues. While the NFPA administers the process and establishes rules to promote fairness in the development of consensus, it does not independently test, evaluate, or verify the accuracy of any information or the soundness of any judgments contained in its codes and standards.

The NFPA disclaims liability for any personal injury, property or other damages of any nature whatsoever, whether special, indirect, consequential or compensatory, directly or indirectly resulting from the publication, use of, or reliance on this document. The NFPA also makes no guaranty or warranty as to the accuracy or completeness of any information published herein.

In issuing and making this document available, the NFPA is not undertaking to render professional or other services for or on behalf of any person or entity. Nor is the NFPA undertaking to perform any duty owed by any person or entity to someone else. Anyone using this document should rely on his or her own independent judgment or, as appropriate, seek the advice of a competent professional in determining the exercise of reasonable care in any given circumstances.

The NFPA has no power, nor does it undertake, to police or enforce compliance with the contents of this document. Nor does the NFPA list, certify, test or inspect products, designs, or installations for compliance with this document. Any certification or other statement of compliance with the requirements of this document shall not be attributable to the NFPA and is solely the responsibility of the certifier or maker of the statement.

--`,,```,,,,````-`-`,,`,,`,`,,`---
Copyright National Fire Protection Association
Provided by IHS under license with NFPA
No reproduction or networking permitted without license from IHS
Not for Resale

ADDITIONAL NOTICES AND DISCLAIMERS

Updating of NFPA Documents

Users of NFPA codes, standards, recommended practices, and guides should be aware that these documents may be superseded at any time by the issuance of new editions or may be amended from time to time through the issuance of Tentative Interim Amendments. An official NFPA document at any point in time consists of the current edition of the document together with any Tentative Interim Amendments and any Errata then in effect. In order to determine whether a given document is the current edition and whether it has been amended through the issuance of Tentative Interim Amendments or corrected through the issuance of Errata, consult appropriate NFPA publications such as the National Fire Codes® Subscription Service, visit the NFPA website at www.nfpa.org, or contact the NFPA at the address listed below.

Interpretations of NFPA Documents

A statement, written or oral, that is not processed in accordance with Section 6 of the Regulations Governing Committee Projects shall not be considered the official position of NFPA or any of its Committees and shall not be considered to be, nor be relied upon as, a Formal Interpretation.

Patents

The NFPA does not take any position with respect to the validity of any patent rights asserted in connection with any items which are mentioned in or are the subject of NFPA codes, standards, recommended practices, and guides, and the NFPA disclaims liability for the infringement of any patent resulting from the use of or reliance on these documents. Users of these documents are expressly advised that determination of the validity of any such patent rights, and the risk of infringement of such rights, is entirely their own responsibility.

NFPA adheres to applicable policies of the American National Standards Institute with respect to patents. For further information contact the NFPA at the address listed below.

Law and Regulations

Users of these documents should consult applicable federal, state, and local laws and regulations. NFPA does not, by the publication of its codes, standards, recommended practices, and guides, intend to urge action that is not in compliance with applicable laws, and these documents may not be construed as doing so.

Copyrights

This document is copyrighted by the NFPA. It is made available for a wide variety of both public and private uses. These include both use, by reference, in laws and regulations, and use in private self-regulation, standardization, and the promotion of safe practices and methods. By making this document available for use and adoption by public authorities and private users, the NFPA does not waive any rights in copyright to this document.

Use of NFPA documents for regulatory purposes should be accomplished through adoption by reference. The term "adoption by reference" means the citing of title, edition, and publishing information only. Any deletions, additions, and changes desired by the adopting authority should be noted separately in the adopting instrument. In order to assist NFPA in following the uses made of its documents, adopting authorities are requested to notify the NFPA (Attention: Secretary, Standards Council) in writing of such use. For technical assistance and questions concerning adoption of NFPA documents, contact NFPA at the address below.

For Further Information

All questions or other communications relating to NFPA codes, standards, recommended practices, and guides and all requests for information on NFPA procedures governing its codes and standards development process, including information on the procedures for requesting Formal Interpretations, for proposing Tentative Interim Amendments, and for proposing revisions to NFPA documents during regular revision cycles, should be sent to NFPA headquarters, addressed to the attention of the Secretary, Standards Council, NFPA, 1 Batterymarch Park, P.O. Box 9101, Quincy, MA 02269-9101.

For more information about NFPA, visit the NFPA website at www.nfpa.org.

--`,,```,,,,````-`-`,,`,,`,`,,`---

Copyright National Fire Protection Association
Provided by IHS under license with NFPA
No reproduction or networking permitted without license from IHS
Not for Resale

Copyright © 2006 National Fire Protection Association. All Rights Reserved.

NFPA 1142

Standard on

Water Supplies for Suburban and Rural Fire Fighting

2007 Edition

This edition of NFPA 1142, *Standard on Water Supplies for Suburban and Rural Fire Fighting*, was prepared by the Technical Committee on Forest and Rural Fire Protection. It was issued by the Standards Council on July 28, 2006, with an effective date of August 17, 2006, and supersedes all previous editions.

This edition of NFPA 1142 was approved as an American National Standard on August 17, 2006.

Origin and Development of NFPA 1142

This document originally was issued in 1968 as a tentative document titled NFPA 25, *Recommended Practices for Water Supply Systems for Rural Fire Protection*. It was reissued in 1969 without the tentative status. In 1975 the document was changed to a standard and renumbered and retitled as NFPA 1231, *Standard on Water Supplies for Suburban and Rural Fire Fighting*.

The standard continued to be maintained and enhanced with 1984, 1989, and 1993 editions. The 1999 edition was renumbered as NFPA 1142, in keeping with the Committee's plan to group all of its documents within a number range.

The 2001 edition incorporated much of the information about the design of dry hydrants, formerly found in the annexes, into the requirements to encourage improved design and performance.

The 2007 edition is a complete revision to better organize the requirements in the standard and to better differentiate between alternate water supplies for fire fighting and municipal-type water systems. The material in Annex A on designing dry hydrant systems has been reorganized and updated into a separate Annex I. The other annexes have been reviewed and updated to reflect current practices.

Dedication

The Forest and Rural Fire Protection Committee dedicates this edition of NFPA 1142 to Louis Witzeman, a member of the Committee from 1972 until just before his death in 2004. Louis was a key member in establishing the research and developing the concepts upon which the requirements in this standard are based.

--`,,```,,,,````-`-`,,`,,`,`,,`---

Copyright National Fire Protection Association
Provided by IHS under license with NFPA
No reproduction or networking permitted without license from IHS

Not for Resale

Technical Committee on Forest and Rural Fire Protection

Randall K. Bradley, *Chair*
Lawrence Livermore National Laboratory, CA [U]

John E. Bunting, *Secretary*
New Boston Fire Department, NH [U]

Lynn R. Biddison, Fire-Trol Holdings LLC, AZ [IM]
James D. Bowman, American Forest & Paper Association, WA [M]
Martin P. Carrier, Carrier Business Advisory Services, Limited, NH [U]
Rep. National Volunteer Fire Council
Donald C. Freyer, Warner Robins, GA [SE]
Charles W. George, IFSC Consultants, MT [SE]
Victoria (Tory) Henderson, USDA Forest Service, ID [E]
Mitchell Hubert, Tyco International/Ansul Inc., WI [M]
Cecilia W. Johnson, USDA Forest Service, MT [RT]
Gregory Kozey, Kochek Company, Inc., CT [M]
Kenneth J. Miller II, County of San Diego, CA [E]
William M. Neville, Jr., Neville Associates, CA [SE]
Martin J. Pabich, Underwriters Laboratories Inc., IL [RT]
Peter T. Schwab, Wayne Automatic Fire Sprinklers, Inc., FL [IM]
Herbert A. Spitzer, Jr., Spitzer's Fire & Environmental Consulting, OR [SE]
Alan D. Stovall, State of California, CA [U]
Edward F. Straw, Insurance Services Office, Inc., GA [I]
Howard L. Vandersall, Lawdon Fire Services, Inc., CA [SE]
James T. Wooters, Mizelle, Hodges and Associates Inc., GA [SE]

Alternates

Kerry M. Bell, Underwriters Laboratories Inc., IL [RT]
(Alt. to M. J. Pabich)
James A. Burns, New York Department of State, NY [E]
(Alt. to IFMA Rep.)
Robert L. Crouch, Fire-Trol Holdings LLC, AZ [IM]
(Alt. to L. R. Biddison)
Jack K. Johnson, Alamosa Fire Department, CO [U]
(Alt. to M. P. Carrier)
Peter Matulonis, Tyco Safety Products, IL [M]
(Alt. to M. Hubert)
William E. (Ruddy) Mell, U.S. National Institute of Standards & Technology, MD [RT]
(Alt. to NIST Rep.)
Ralph E. Steinhoff, County of San Diego, CA [E]
(Alt. to K. J. Miller II)
David P. Tyree, American Forest & Paper Association, CO [M]
(Alt. to J. D. Bowman)

Carl E. Peterson, NFPA Staff Liaison

This list represents the membership at the time the Committee was balloted on the final text of this edition. Since that time, changes in the membership may have occurred. A key to classifications is found at the back of the document.

NOTE: Membership on a committee shall not in and of itself constitute an endorsement of the Association or any document developed by the committee on which the member serves.

Committee Scope: This Committee shall have primary responsibility for documents on fire protection for rural, suburban, forest, grass, brush, and tundra areas. This Committee shall also have primary responsibility for documents on Class A foam and its utilization for all wildland and structural fire fighting. This excludes fixed fire protection systems.

--`,,```,,,,````-`-`,,`,,`,`,,`---

Copyright National Fire Protection Association
Provided by IHS under license with NFPA
No reproduction or networking permitted without license from IHS
Not for Resale

Contents

Chapter 1 Administration **1142–** 4
1.1 Scope **1142–** 4
1.2 Purpose **1142–** 4
1.3 Application **1142–** 4
1.4 Equivalency **1142–** 4

Chapter 2 Referenced Publications **1142–** 4
2.1 General **1142–** 4
2.2 NFPA Publications **1142–** 4
2.3 Other Publications **1142–** 4
2.4 References for Extracts in Mandatory Sections **1142–** 4

Chapter 3 Definitions **1142–** 4
3.1 General **1142–** 4
3.2 NFPA Official Definitions **1142–** 5
3.3 General Definitions **1142–** 5

Chapter 4 Calculating Minimum Water Supplies . **1142–** 5
4.1 General **1142–** 5
4.2 Structures Without Exposure Hazards **1142–** 6
4.3 Structures with Exposure Hazards **1142–** 6
4.4 Structures with Automatic Sprinkler Protection **1142–** 6
4.5 Structures with Other Automatic Fire Suppression Systems **1142–** 6
4.6 Water Delivery Rate to the Fire Scene **1142–** 6
4.7 Other Uses **1142–** 6

Chapter 5 Classification of Occupancy Hazard .. **1142–** 7
5.1 General **1142–** 7
5.2 Occupancy Hazard Classification Number **1142–** 7

Chapter 6 Classification of Construction **1142–** 8
6.1 General **1142–** 8
6.2 Construction Classification Number **1142–** 8
6.3 Classification of Types of Building Construction **1142–** 8

Chapter 7 Water Supply **1142–**10
7.1 Approved Water Supply **1142–**10
7.2 Water Use Agreements **1142–**10
7.3 Identifying Water Sources **1142–**10
7.4 Fire Department Connections **1142–**10
7.5 Access to Water Sources **1142–**10
7.6 Mobile Water Supply Training **1142–**10
7.7 Records **1142–**10

Chapter 8 Dry Hydrants **1142–**10
8.1 General **1142–**10
8.2 Planning and Permits **1142–**10
8.3 Dry Hydrant Design and Location **1142–**10
8.4 Dry Hydrant Locations **1142–**11
8.5 Depth of Water Sources **1142–**11
8.6 Installation Procedure for Dry Hydrant System **1142–**11
8.7 Inspection and Maintenance of Dry Hydrants **1142–**11
8.8 Records for Dry Hydrants **1142–**11

Annex A Explanatory Material **1142–**11

Annex B Water Supply **1142–**21

Annex C Mobile Water Supply Apparatus **1142–**25

Annex D Large-Diameter Hose **1142–**34

Annex E Portable Pumps **1142–**37

Annex F Automatic Sprinkler Protection **1142–**39

Annex G Municipal-Type Water System **1142–**40

Annex H Calculating Minimum Water Supplies .. **1142–**47

Annex I Dry Hydrant Design **1142–**53

Annex J Informational References **1142–**60

Index **1142–**62

Copyright National Fire Protection Association
Provided by IHS under license with NFPA
No reproduction or networking permitted without license from IHS
Not for Resale

NFPA 1142

Standard on

Water Supplies for Suburban and Rural Fire Fighting

2007 Edition

IMPORTANT NOTE: This NFPA document is made available for use subject to important notices and legal disclaimers. These notices and disclaimers appear in all publications containing this document and may be found under the heading "Important Notices and Disclaimers Concerning NFPA Documents." They can also be obtained on request from NFPA or viewed at www.nfpa.org/disclaimers.

NOTICE: An asterisk (*) following the number or letter designating a paragraph indicates that explanatory material on the paragraph can be found in Annex A.

A reference in brackets [ ] following a section or paragraph indicates material that has been extracted from another NFPA document. As an aid to the user, the complete title and edition of the source documents for extracts in mandatory sections of the document are given in Chapter 2 and those for extracts in informational sections are given in Annex J. Editorial changes to extracted material consist of revising references to an appropriate division in this document or the inclusion of the document number with the division number when the reference is to the original document. Requests for interpretations or revisions of extracted text shall be sent to the technical committee responsible for the source document.

Information on referenced publications can be found in Chapter 2 and Annex J.

Chapter 1 Administration

1.1 Scope.

1.1.1 This standard identifies a method of determining the minimum requirements for alternative water supplies for structural fire-fighting purposes in areas where the authority having jurisdiction determines that adequate and reliable water supply systems for fire-fighting purposes do not otherwise exist.

1.1.2 An adequate and reliable municipal-type water supply is one that is sufficient every day of the year to control and extinguish anticipated fires in the municipality, particular building, or building group served by the water supply.

1.2* Purpose. The purpose of this standard is to assist the authority having jurisdiction to establish the minimum water supply necessary for structural fire-fighting purposes in those areas where it has been determined that there is no water or inadequate water for fire fighting.

1.3 Application.

1.3.1 This standard does not address fireground operational procedures dealing with the rate or method of water application.

1.3.2* This standard does not apply to the calculation of an adequate amount of water for large, special fire protection problems, such as bulk flammable liquid storage, bulk flammable gas storage, large varnish and paint factories, some plastics manufacturing and storage, aircraft hangars, distilleries, refineries, lumberyards, grain elevators, large chemical plants, coal mines, tunnels, subterranean structures, and warehouses using high rack storage for flammables or pressurized aerosols.

1.3.3 This standard does not exclude the use of this water for other fire-fighting or emergency activities.

1.4 Equivalency. Nothing in this standard is intended to prevent the use of systems, methods, or devices of equivalent or superior quality, strength, fire resistance, effectiveness, durability, and safety in place of those prescribed by this standard, provided technical documentation is submitted to the authority having jurisdiction to demonstrate equivalency and the system, method, or device is approved for the intended purpose.

Chapter 2 Referenced Publications

2.1 General. The documents or portions thereof listed in this chapter are referenced within this standard and shall be considered part of the requirements of this document.

2.2 NFPA Publications. National Fire Protection Association, 1 Batterymarch Park, Quincy, MA 02169-7471.

NFPA 13, *Standard for the Installation of Sprinkler Systems,* 2007 edition.

NFPA 13D, *Standard for the Installation of Sprinkler Systems in One- and Two-Family Dwellings and Manufactured Homes,* 2007 edition.

NFPA 13R, *Standard for the Installation of Sprinkler Systems in Residential Occupancies up to and Including Four Stories in Height,* 2007 edition.

NFPA 220, *Standard on Types of Building Construction,* 2006 edition.

NFPA 285, *Standard Fire Test Method for Evaluation of Fire Propagation Characteristics of Exterior Non-Load-Bearing Wall Assemblies Containing Combustible Components,* 2006 edition.

NFPA 1963, *Standard for Fire Hose Connections,* 2003 edition.

2.3 Other Publications.

Merriam-Webster's Collegiate Dictionary, 11th edition, Merriam-Webster, Inc., Springfield, MA, 2003.

2.4 References for Extracts in Mandatory Sections.

NFPA 13D, *Standard for the Installation of Sprinkler Systems in One- and Two-Family Dwellings and Manufactured Homes,* 2007 edition.

NFPA 1141, *Standard for Fire Protection in Planned Building Groups,* 2003 edition.

NFPA 1600, *Standard on Disaster/Emergency Management and Business Continuity Programs,* 2004 edition.

NFPA 1911, *Standard for Service Tests of Fire Pump Systems on Fire Apparatus,* 2002 edition.

NFPA 1961, *Standard on Fire Hose,* 2002 edition.

NFPA 5000®, Building Construction and Safety Code®, 2006 edition.

Chapter 3 Definitions

3.1 General. The definitions contained in this chapter shall apply to the terms used in this standard. Where terms are not defined in this chapter or within another chapter, they shall be defined using their ordinarily accepted meanings within

Copyright National Fire Protection Association
Provided by IHS under license with NFPA
No reproduction or networking permitted without license from IHS
Not for Resale

the context in which they are used. *Merriam-Webster's Collegiate Dictionary,* 11th edition, shall be the source for the ordinarily accepted meaning.

3.2 NFPA Official Definitions.

3.2.1* Approved. Acceptable to the authority having jurisdiction.

3.2.2* Authority Having Jurisdiction (AHJ). An organization, office, or individual responsible for enforcing the requirements of a code or standard, or for approving equipment, materials, an installation, or a procedure.

3.2.3 Shall. Indicates a mandatory requirement.

3.2.4 Should. Indicates a recommendation or that which is advised but not required.

3.2.5 Standard. A document, the main text of which contains only mandatory provisions using the word "shall" to indicate requirements and which is in a form generally suitable for mandatory reference by another standard or code or for adoption into law. Nonmandatory provisions shall be located in an appendix or annex, footnote, or fine-print note and are not to be considered a part of the requirements of a standard.

3.3 General Definitions.

3.3.1 Alternative Water Supply. Water supplies provided to meet the minimum fire flow/duration requirements where no municipal-type water system exists or to supplement an inadequate municipal-type water supply.

3.3.2 Automatic Aid. A plan developed between two or more fire departments for immediate joint response on first alarms.

3.3.3 Building. Any structure used or intended for supporting any occupancy.

3.3.4 Construction Classification Number. A series of numbers from 0.5 through 1.5 that are mathematical factors used in a formula to determine the total water supply requirements.

3.3.5 Dry Hydrant. An arrangement of pipe permanently connected to a water source other than a piped, pressurized water supply system that provides a ready means of water supply for fire-fighting purposes and that utilizes the drafting (suction) capability of a fire department pump.

3.3.6 Dwelling. Any building that contains not more than one or two dwelling units intended to be used, rented, leased, let, or hired out to be occupied or that are occupied for habitation purposes. [**13D,** 2007]

3.3.7 Dwelling Unit. One or more rooms arranged for the use of one or more individuals living together, providing complete, independent living facilities, including permanent provisions for living, sleeping, eating, cooking, and sanitation. [***5000,*** 2006]

3.3.8* Exposure Hazard. A structure within 50 ft (15.24 m) of another building and 100 ft^2 (9.3 m^2) or larger in area.

3.3.9* Fire Department. An organization providing fire suppression, rescue, and related activities.

3.3.10* Large Diameter Hose. A hose of 3½ in. (90 mm) size or larger. [**1961,** 2002]

3.3.11 Lift. The vertical height that water must be raised during a drafting operation, measured from the surface of a static source of water to the centerline of the pump intake. [**1911,** 2002]

3.3.12 Minimum Water Supply. The quantity of water required for fire control and extinguishment.

3.3.13 Mobile Water Supply Apparatus (Tanker, Tender). A vehicle designed primarily for the safe and effective pickup, transport, and delivery of water to fire emergency scenes where other apparatus or pumping equipment provide tactical fire stream application.

3.3.14 Municipal-Type Water System. A system having water pipes serving hydrants and designed to furnish, over and above domestic consumption, a minimum flow of 250 gpm (950 L/min) at 20 psi (139 kPa) residual pressure for a 2-hour duration. [**1141,** 2003]

3.3.15* Mutual Aid Agreement. A pre-arranged agreement developed between two or more entities to render assistance to the parties of the agreement. [**1600,** 2004]

3.3.16 Occupancy Hazard Classification Number. A series of numbers from 3 through 7 that are mathematical factors used in a formula to determine total water supply requirements.

3.3.17 Reducer. A fitting used to connect a small hose line or pipe to a larger hose line or pipe.

3.3.18 Rural. Those areas that are not unsettled wilderness or uninhabitable territory but are sparsely populated with densities below 500 persons per square mile.

3.3.19 Structure. That which is built or constructed; an edifice or building of any kind.

3.3.20* Suburb or Suburban. Those moderately inhabited areas with population densities of at least 500 persons per square mile but less than 1000 persons per square mile.

3.3.21 Water Delivery Rate. The minimum amount of water per minute (in gpm or L/min), required by this standard or the AHJ, to be delivered to the fire scene via mobile water supply apparatus, hose lines, or a combination of both.

3.3.22* Water Supply Officer (WSO). The fire department officer or designee responsible for providing water for fire-fighting purposes.

Chapter 4 Calculating Minimum Water Supplies

4.1 General.

4.1.1 Prior to calculating the minimum water supply for a structure, the structure shall be surveyed to obtain the following information:

(1) Occupancy hazard
(2) Type of construction
(3) Structure dimensions (length, width, and height)
(4) Exposures, if any

4.1.1.1 For new construction, plans shall be submitted to the fire department or the authority having jurisdiction (AHJ) for determination of the minimum water supply required before construction is started.

4.1.1.2 In other than residential occupancies, changes made in the structural design, occupancy, or contents of a structure that affect the occupancy hazard or the construction type shall require that the structure be resurveyed to determine if changes are necessary in the minimum water supply required.

4.1.1.3 If there are changes in automatic fire suppression systems in a structure that would affect the protection afforded,

Copyright National Fire Protection Association
Provided by IHS under license with NFPA
No reproduction or networking permitted without license from IHS
Not for Resale

the property owner(s) shall notify the AHJ in writing of such changes, including temporary impairment.

4.1.2* The methodology in this chapter shall be used to calculate the required minimum water supply necessary for structural fire-fighting purposes.

4.1.3* The minimum requirements shall be subject to increase by the AHJ to compensate for particular conditions such as the following:

(1) Limited fire department resources
(2) Extended fire department response time or distance
(3) Potential for delayed discovery of the fire
(4) Limited access
(5) Hazardous vegetation
(6) Structural attachments, such as decks and porches
(7) Unusual terrain
(8) Special uses and unusual occupancies

4.1.4 The AHJ shall be permitted to specify how the water supplies required in this document are provided, giving consideration to local conditions and need.

4.1.5 For the purpose of calculating minimum water supply requirement, a structure shall be considered an exposure hazard under the following conditions:

(1) It is 100 ft^2 (9.3 m^2) or larger in area and is within 50 ft (15.24 m) of another structure.
(2) The structure, regardless of size, is of occupancy hazard classification 3 or 4 as determined in Chapter 5 and is within 50 ft (15.24 m) of another structure.

4.2 Structures Without Exposure Hazards.

4.2.1* For structures with no exposure hazards, the minimum water supply, in gallons, shall be determined by calculating the total enclosed cubic footage of the structure, including any attached structures, dividing by the occupancy hazard classification number as determined from Chapter 5, and multiplying by the construction classification number as determined from Chapter 6 as follows:

$$WS_{min} = \frac{VS_{tot}}{OHC}(CC)$$

where:
WS_{min} = minimum water supply in gal (For results in L, multiply by 3.785.)
VS_{tot} = total volume of structure in ft^3 (If volume is measured in m^3, multiply by 35.3.)
OHC = occupancy hazard classification number
CC = construction classification number

4.2.2 The minimum water supply required for any structure without exposure hazards shall not be less than 2000 gal (7600 L).

4.3 Structures with Exposure Hazards.

4.3.1* For structures with unattached structural exposure hazards, the minimum water supply, in gallons, shall be determined by calculating the total enclosed cubic footage of the structure, dividing by the occupancy hazard classification number as determined from Chapter 5, multiplying by the construction classification number as determined from Chapter 6, and multiplying by 1.5 as follows:

$$WS_{min} = \frac{VS_{tot}}{OHC}(CC)\times 1.5$$

where:
WS_{min} = minimum water supply in gal (For results in L, multiply by 3.785.)
VS_{tot} = total volume of structure in ft^3 (If volume is measured in m^3, multiply by 35.3.)
OHC = occupancy hazard classification number
CC = construction classification number

4.3.2 The minimum water supply required for a structure with exposure hazards shall not be less than 3000 gal (11,355 L).

4.4* Structures with Automatic Sprinkler Protection.

4.4.1 The AHJ shall be permitted to reduce the water supply required by this standard for manual fire-fighting purposes when a structure is protected by an automatic sprinkler system that fully meets the requirements of NFPA 13, *Standard for the Installation of Sprinkler Systems*; NFPA 13D, *Standard for the Installation of Sprinkler Systems in One- and Two-Family Dwellings and Manufactured Homes*; or NFPA 13R, *Standard for the Installation of Sprinkler Systems in Residential Occupancies up to and Including Four Stories in Height. (See Annex F.)*

4.4.2 If a sprinkler system protecting a building does not fully meet the requirements of NFPA 13, NFPA 13D, or NFPA 13R, a water supply shall be provided in accordance with this standard.

4.5 Structures with Other Automatic Fire Suppression Systems. For any structure fully or partially protected by an automatic fire suppression system other than as specified in Section 4.4, the AHJ shall determine the minimum water supply required for fire-fighting purposes.

4.6 Water Delivery Rate to the Fire Scene.

4.6.1 The fire department shall develop the capability to deliver the amount of water determined in accordance with Sections 4.2 through 4.5 to the incident scene at the rate shown in Table 4.6.1.

Table 4.6.1 Minimum Capability of Fire Department to Deliver Water

Total Water Supply Required		Rate Water Is Available at the Incident	
gal	L	gpm	L/min
<2,500	9,459	250	950
2,500–9,999	9,460–37,849	500	1,900
10,000–19,999	37,850–75,699	750	2,850
≥20,000	≥75,700	1,000	3,800

4.6.2 The water shall be available on a continuous basis at the rate shown in Table 4.6.1 within 5 minutes of the arrival of the first apparatus at the incident.

4.7 Other Uses. Water supplies developed to meet this standard shall be permitted to be used for fighting fires in other than structures or for use during other emergency activities.

Copyright National Fire Protection Association
Provided by IHS under license with NFPA
No reproduction or networking permitted without license from IHS
Not for Resale

Chapter 5 Classification of Occupancy Hazard

5.1 General.

5.1.1 This chapter shall be used to determine the occupancy hazard classification number used in the calculation of water supply requirements in Chapter 4.

5.1.2 Where more than one occupancy is present in a structure, the occupancy hazard classification number for each occupancy shall be determined separately, and the classification number for the most hazardous occupancy shall be used for the entire structure.

5.2* Occupancy Hazard Classification Number.

5.2.1 Occupancy Hazard Classification Number 3.

5.2.1.1* Occupancy hazard classification number 3 shall be used for severe hazard occupancies.

5.2.1.2 Occupancies having conditions similar to the following shall be assigned occupancy hazard classification number 3:

(1) Cereal or flour mills
(2) Combustible hydraulics
(3) Cotton picking and opening operations
(4) Die casting
(5) Explosives and pyrotechnics manufacturing and storage
(6) Feed and gristmills
(7) Flammable liquid spraying
(8) Flow coating/dipping
(9) Linseed oil mills
(10) Manufactured homes/modular building assembly
(11) Metal extruding
(12) Plastic processing
(13) Plywood and particleboard manufacturing
(14) Printing using flammable inks
(15) Rubber reclaiming
(16) Sawmills
(17) Solvent extracting
(18) Straw or hay in bales
(19) Textile picking
(20) Upholstering with plastic foams

5.2.2 Occupancy Hazard Classification Number 4.

5.2.2.1* Occupancy hazard classification number 4 shall be used for high hazard occupancies.

5.2.2.2 Occupancies having conditions similar to the following shall be assigned occupancy hazard classification number 4:

(1) Barns and stables (commercial)
(2) Building materials supply storage
(3) Department stores
(4) Exhibition halls, auditoriums, and theaters
(5) Feed stores (without processing)
(6) Freight terminals
(7) Mercantiles
(8) Paper and pulp mills
(9) Paper processing plants
(10) Piers and wharves
(11) Repair garages
(12) Rubber products manufacturing and storage
(13) Warehouses, such as those used for furniture, general storage, paint, paper, and woodworking industries

5.2.3 Occupancy Hazard Classification Number 5.

5.2.3.1 Occupancy hazard classification number 5 shall be used for moderate hazard occupancies, in which the quantity or combustibility of contents is expected to develop moderate rates of spread and heat release. The storage of combustibles shall not exceed 12 ft (3.66 m) in height.

5.2.3.2 Occupancies having conditions similar to the following shall be assigned occupancy hazard classification number 5:

(1) Amusement occupancies
(2) Clothing manufacturing plants
(3) Cold storage warehouses
(4) Confectionery product warehouses
(5) Farm storage buildings, such as corn cribs, dairy barns, equipment sheds, and hatcheries
(6) Laundries
(7) Leather goods manufacturing plants
(8) Libraries (with large stockroom areas)
(9) Lithography shops
(10) Machine shops
(11) Metalworking shops
(12) Nurseries (plant)
(13) Pharmaceutical manufacturing plants
(14) Printing and publishing plants
(15) Restaurants
(16) Rope and twine manufacturing plants
(17) Sugar refineries
(18) Tanneries
(19) Textile manufacturing plants
(20) Tobacco barns
(21) Unoccupied buildings

5.2.4 Occupancy Hazard Classification Number 6.

5.2.4.1 Occupancy hazard classification number 6 shall be used for low hazard occupancies, in which the quantity or combustibility of contents is expected to develop relatively low rates of spread and heat release.

5.2.4.2 Occupancies having conditions similar to the following shall be assigned occupancy hazard classification number 6:

(1) Armories
(2) Automobile parking garages
(3) Bakeries
(4) Barber or beauty shops
(5) Beverage manufacturing plants/breweries
(6) Boiler houses
(7) Brick, tile, and clay product manufacturing plants
(8) Canneries
(9) Cement plants
(10) Churches and similar religious structures
(11) Dairy products manufacturing and processing plants
(12) Doctors' offices
(13) Electronics plants
(14) Foundries
(15) Fur processing plants
(16) Gasoline service stations
(17) Glass and glass products manufacturing plants
(18) Horse stables
(19) Mortuaries
(20) Municipal buildings
(21) Post offices
(22) Slaughterhouses

--`,,```,,,,````-`-`,,`,,`,`,,`---
Copyright National Fire Protection Association
Provided by IHS under license with NFPA
No reproduction or networking permitted without license from IHS
Not for Resale

(23) Telephone exchanges
(24) Tobacco manufacturing plants
(25) Watch and jewelry manufacturing plants
(26) Wineries

5.2.5 Occupancy Hazard Classification Number 7.

5.2.5.1 Occupancy hazard classification number 7 shall be used for light hazard occupancies, in which the quantity or combustibility of contents is expected to develop relatively light rates of spread and heat release.

5.2.5.2 Occupancies having conditions similar to the following shall be assigned occupancy hazard classification number 7:

(1) Apartments
(2) Colleges and universities
(3) Clubs
(4) Dormitories
(5) Dwellings
(6) Fire stations
(7) Fraternity or sorority houses
(8) Hospitals
(9) Hotels and motels
(10) Libraries (except large stockroom areas)
(11) Museums
(12) Nursing and convalescent homes
(13) Offices (including data processing)
(14) Police stations
(15) Prisons
(16) Schools
(17) Theaters without stages

Chapter 6 Classification of Construction

6.1 General.

6.1.1 This chapter shall be used to determine the construction classification number used in the calculation of water supply requirements in Chapter 4.

6.1.2 Where more than one type of construction is present in a structure, the classification number for each type of construction shall be determined separately, and the higher construction classification number shall be used for the entire structure.

6.2* Construction Classification Number.

6.2.1 The construction classification number shall be as shown in Table 6.2.1 based on the construction of the structure as determined in accordance with Section 6.3.

6.2.2 For dwellings, the maximum construction classification number shall be 1.0.

Table 6.2.1 Construction Classification Number

Construction Type	Classification Number
Type I (442 or 332)	0.5
Type II (222, 111, or 000)	0.75
Type III (211 or 200)	1.0
Type IV (2HH)	0.75
Type V (111 or 000)	1.5

6.3 Classification of Types of Building Construction.

6.3.1* Classification of types of building construction shall be in accordance with 6.3.3 through 6.3.7 and Table 6.3.1.

6.3.2 If the type of construction of the structure has been determined using NFPA 220, *Standard on Types of Building Construction*, that type of construction shall be permitted to be used in lieu of determining the type of construction in accordance with 6.3.3 through 6.3.7.

6.3.3 Type I (442 or 332) Construction.

6.3.3.1 Type I (442 or 332) construction shall be those types in which the fire walls, structural elements, walls, arches, floors, and roofs, are of approved noncombustible or limited-combustible materials.

6.3.3.2 Structural members shall have fire resistance ratings not less than those specified in Table 6.3.1.

6.3.4 Type II (222, 111, or 000) Construction.

6.3.4.1 Type II (222, 111, or 000) construction shall be those types not qualifying as Type I construction in which the fire walls, structural elements, walls, arches, floors, and roofs are of approved noncombustible or limited-combustible materials.

6.3.4.2 Structural members shall have fire resistance ratings not less than those specified in Table 6.3.1.

6.3.5 Type III (211 or 200) Construction.

6.3.5.1 Type III (211 or 200) construction shall be that type in which exterior walls and structural members that are portions of exterior walls are of approved noncombustible or limited-combustible materials.

6.3.5.2 Fire walls, interior structural elements, walls, arches, floors, and roofs shall be permitted to be entirely or partially constructed of wood of smaller dimensions than required for Type IV construction or of approved noncombustible, limited-combustible, or other approved combustible materials.

6.3.5.3 In addition, structural members shall have fire resistance ratings not less than those specified in Table 6.3.1.

6.3.6 Type IV (2HH) Construction.

6.3.6.1 Type IV (2HH) construction shall be that type in which fire walls, exterior walls, and interior bearing walls and structural elements that are portions of such walls are of approved noncombustible or limited-combustible materials.

6.3.6.1.1 Other interior structural elements, arches, floors, and roofs shall be of solid or laminated wood without concealed spaces and shall comply with the allowable dimensions of 6.3.6.5 through 6.3.6.10.

6.3.6.1.2 In addition, structural members shall have fire resistance ratings not less than those specified in Table 6.3.1.

6.3.6.2 Interior columns, arches, beams, girders, and trusses of approved materials other than wood shall be permitted, provided they are protected to provide a fire resistance rating of not less than 1 hour.

6.3.6.3 Certain concealed spaces shall be permitted in accordance with 6.3.6.7.4.

6.3.6.4 All dimensions in 6.3.6.5 through 6.3.6.10 shall be considered nominal.

Copyright National Fire Protection Association
Provided by IHS under license with NFPA
No reproduction or networking permitted without license from IHS
Not for Resale

Table 6.3.1 Fire Resistance Ratings for Type I through Type V Construction (hr)

	Type I		Type II			Type III		Type IV	Type V	
	442	332	222	111	000	211	200	2HH	111	000
Exterior Bearing Walls										
Supporting more than one floor, columns, or other bearing walls	4	3	2	1	0	2	2	2	1	0
Supporting one floor only	4	3	2	1	0	2	2	2	1	0
Supporting a roof only	4	3	1	1	0	2	2	2	1	0
Interior Bearing Walls										
Supporting more than one floor, columns, or other bearing walls	4	3	2	1	0	1	0	2	1	0
Supporting one floor only	3	2	2	1	0	1	0	1	1	0
Supporting roofs only	3	2	1	1	0	1	0	1	1	0
Columns										
Supporting more than one floor, columns, or other bearing walls	4	3	2	1	0	1	0	H*	1	0
Supporting one floor only	3	2	2	1	0	1	0	H*	1	0
Supporting roofs only	3	2	1	1	0	1	0	H*	1	0
Beams, Girders, Trusses, and Arches										
Supporting more than one floor, columns, or other bearing walls	4	3	2	1	0	1	0	H*	1	0
Supporting one floor only	2	2	2	1	0	1	0	H*	1	0
Supporting roofs only	2	2	1	1	0	1	0	H*	1	0
Floor Construction	2	2	2	1	0	1	0	H*	1	0
Roof Construction	2	1½	1	1	0	1	0	H*	1	0
Interior Nonbearing Walls	0	0	0	0	0	0	0	0	0	0
Exterior Nonbearing Walls†	0	0	0	0	0	0	0	0	0	0

Note: Shaded columns indicate those members that are permitted to be of approved combustible material.

*"H" indicates heavy timber members; see 6.3.6 for requirements.

†Exterior nonbearing walls meeting the conditions of acceptance of NFPA 285, *Standard Fire Test Method for Evaluation of Fire Propagation Characteristics of Exterior Non-Load-Bearing Wall Assemblies Containing Combustible Components*, are permitted to be used.

6.3.6.5 Columns.

6.3.6.5.1 Wood columns supporting floor loads shall be not less than 8 in. (200 mm) in any dimension.

6.3.6.5.2 Wood columns supporting only roof loads shall be not less than 6 in. (150 mm) in width and not less than 8 in. (200 mm) in depth.

6.3.6.6 Beams.

6.3.6.6.1 Wood beams and girders supporting floor loads shall be not less than 6 in. (150 mm) in width and not less than 10 in. (250 mm) in depth.

6.3.6.6.2 Wood beams and girders and other roof framing supporting only roof loads shall be not less than 4 in. (100 mm) in width and not less than 6 in. (150 mm) in depth.

6.3.6.7 Arches.

6.3.6.7.1 Framed or glued laminated arches that spring from grade or the floor line and timber trusses that support floor loads shall be not less than 8 in. (200 mm) in width or depth.

6.3.6.7.2 Framed or glued laminated arches for roof construction that spring from grade or the floor line and do not support floor loads shall have members not less than 6 in. (150 mm) in width and not less than 8 in. (200 mm) in depth for the lower half of the member height, and not less than 6 in. (150 mm) in depth for the upper half of the member height.

6.3.6.7.3 Framed or glued laminated arches for roof construction that spring from the top of walls or wall abutments, and timber trusses that do not support floor loads, shall have members not less than 4 in. (100 mm) in width and not less than 6 in. (150 mm) in depth.

6.3.6.7.4 Spaced members shall be permitted to be composed of two or more pieces not less than 3 in. (75 mm) in thickness where blocked solidly throughout their intervening spaces or where such spaces are tightly closed by a continuous wood cover plate not less than 2 in. (50 mm) in thickness that is secured to the underside of the members.

6.3.6.8 Splice Plates. Splice plates shall be not less than 3 in. (75 mm) in thickness.

Copyright National Fire Protection Association
Provided by IHS under license with NFPA
No reproduction or networking permitted without license from IHS
Not for Resale

6.3.6.9 Floors. Floors shall be constructed of spline or tongue-and-groove plank not less than 3 in. (75 mm) in thickness that is covered with 1 in. (25 mm) tongue-and-groove flooring, laid crosswise or diagonally to the plank, or with ½ in. (12.5 mm) wood structural panel; or they shall be constructed of laminated planks not less than 4 in. (100 mm) in width, set close together on edge, spiked at intervals of 18 in. (460 mm), and covered with 1 in. (25 mm) tongue-and-groove flooring, laid crosswise or diagonally to the plank, or with ½ in. (12.5 mm) wood structural panel.

6.3.6.10 Roof Decks. Roof decks shall be constructed of spline or tongue-and-groove plank not less than 2 in. (50 mm) in thickness; or of laminated planks not less than 3 in. (75 mm) in width, set close together on edge, and laid as required for floors; or of 1⅛ in. (28.5 mm) thick interior wood structural panel (exterior glue); or of approved noncombustible or limited-combustible materials of equivalent fire durability.

6.3.7 Type V (111 or 000) Construction. Type V (111 or 000) construction shall be that type in which exterior walls, bearing walls, columns, beams, girders, trusses, arches, floors, and roofs are entirely or partially of wood or other approved combustible material smaller than material required for Type IV construction. In addition, structural members shall have fire resistance ratings not less than those specified in Table 6.3.1.

Chapter 7 Water Supply

7.1 Approved Water Supply.

7.1.1* Any water supply source used to meet the requirements of this standard shall be of a quality approved by the AHJ.

7.1.2 The water supply source shall be maintained and accessible on a year-round basis.

7.1.3 In locations where adequate municipal-type water systems are not provided and additional fire protection is needed, minimum water supplies shall be established in, or transportable to, the designated area.

7.1.4 Unless otherwise permitted by the AHJ, all approved nonpressurized water supply sources shall be accessible using dry hydrants that meet the requirements of this standard.

7.1.5* To be acceptable, water supply sources shall maintain the minimum capacity and delivery requirements on a year-round basis, based on the 50-year drought for the water source.

7.2* Water Use Agreements. The AHJ shall enter into a water use agreement when a private water supply source is to be used to meet the requirements of this standard.

7.3 Identifying Water Sources. A water source indicator approved by the AHJ shall be erected at each water point identifying the site for fire department emergency use.

7.4 Fire Department Connections. Any fitting provided at a water source to permit a fire apparatus to connect to the water source shall be approved by the AHJ and shall conform to NFPA 1963, *Standard for Fire Hose Connections.*

7.5* Access to Water Sources. Roads providing a means of access to any required water supply shall be constructed and maintained in accordance with the following:

(1) Roadways shall have a minimum clear width of 12 ft (3.7 m) for each lane of travel.
(2) Turns shall be constructed with a minimum radius of 100 ft (30.5 m) to the centerline.
(3) The maximum sustained grade shall not exceed 8 percent.
(4) All cut-and-fill slopes shall be stable for the soil involved.
(5) Bridges, culverts, or grade dips shall be provided at all drainageway crossings; roadside ditches shall be deep enough to provide drainage with special drainage facilities (tile, etc.) at all seep areas and high water-table areas.
(6) The surface shall be treated as required for year-round travel.
(7) Erosion control measures shall be used as needed to protect road ditches, cross drains, and cut-and-fill slopes.
(8)*Where turnarounds are utilized during fire-fighting operations, they shall be designed with a diameter of 120 ft (36.5 m) or larger, as required, to accommodate the equipment of the responding fire department.
(9) Load-carrying capacity shall be adequate to carry the maximum vehicle load expected.
(10) The road shall be suitable for all-weather use.

7.6 Mobile Water Supply Training. To promote operational safety and effectiveness, the AHJ shall determine what training is required. *(See C.10.)*

7.7 Records.

7.7.1 A record of each water supply shall be prepared and periodically updated.

7.7.2 The records shall be retained in accordance with the record retention policy of the jurisdiction or state.

7.7.3 Records developed to meet the requirements of this standard shall be retained for a minimum of 3 years after the agreement, facility, or equipment is no longer used for its original purpose.

Chapter 8 Dry Hydrants

8.1* General. The AHJ shall ensure that generally accepted design practices are employed during the following:

(1) Dry hydrant location planning
(2) The permit process
(3) Design criteria
(4) Construction

8.2 Planning and Permits. The planning, permitting, and design processes shall be completed before the actual construction begins.

8.2.1 Planning shall be coordinated among public and private entities that could be impacted by the installation of a dry hydrant.

8.2.2* Required permits to install a dry hydrant shall be obtained prior to installation.

8.3* Dry Hydrant Design and Location.

8.3.1* The AHJ shall approve all aspects of the dry hydrant design and construction, including the type of materials, pipe size, and system fittings to be used.

Copyright National Fire Protection Association
Provided by IHS under license with NFPA
No reproduction or networking permitted without license from IHS
Not for Resale

8.3.2* As a minimum, Schedule 40 pipe and component fittings shall be used.

8.3.3* All dry hydrant systems shall be designed and constructed to provide a minimum flow of 1000 gpm (3800 L/min) at draft.

8.3.4* The water supply source for the dry hydrant shall provide, on a year-round basis, the required quantity of water, as determined in Chapter 4, and the minimum flow as required in 8.3.3.

8.3.5* Dry hydrant systems shall be designed and constructed so that slope and piping configurations do not impede drafting capability.

8.3.6* All exposed surfaces and all underground metal surfaces shall be protected to prevent deterioration.

8.3.7* A minimum number of elbows shall be used in the piping system.

8.3.8 Suction hose connection(s) shall be compatible with the fire department's hard suction hose size and shall conform to NFPA 1963, *Standard for Fire Hose Connections*. The connection(s) shall include a protective cap. The cap and adapter shall be of materials that minimize rust and galvanic corrosion.

8.3.9 Dry hydrant system piping shall be supported and/or stabilized using approved engineering design practices.

8.3.10 Stabilization or equivalent protection shall be employed at elbows and other system stress points.

8.3.11 In addition to strength of materials and structural support criteria, design shall specify appropriate aggregates and soil materials to be used to backfill/cover piping during installation.

8.3.12 All connections shall be clean, and the appropriate sealing materials shall be used according to manufacturer's specifications so as to ensure that all joints are airtight.

8.3.13* System strainers shall be constructed to permit required fire flow.

8.4* Dry Hydrant Locations.

8.4.1 Adequate working space shall be provided around the dry hydrant to provide for a safe working environment.

8.4.2* Dry hydrants shall be located such that they are accessible under all weather conditions.

8.4.3 The dry hydrant system and access to the site shall be developed in a manner that allows the fire department pump to connect to the hydrant using not more than 20 ft (6 m) of hard suction hose.

8.4.4 Dry hydrants shall be located a minimum of 100 ft (30 m) from any structure.

8.4.5 No parking or other obstacles shall be allowed within 20 ft (6 m) of the access side of the hydrant.

8.4.6* Dry hydrants shall be protected from damage by vehicular and other perils, including freezing and damage from ice and other objects.

8.4.7* Dry hydrant locations shall be made visible from the main roadway during emergencies by reflective marking and signage approved by the AHJ.

8.4.8 All identification signs shall be approved by the highway authority prior to installation if they are to be located on the right-of-way or are subject to state laws.

8.5* Depth of Water Sources.

8.5.1 There shall be not less than 2 ft (0.6 m) of water above the strainer and not less than 1 ft (0.3 m) below the strainer.

8.5.2 Depth of the water shall be based on the 50-year drought level for the water source.

8.6* Installation Procedure for Dry Hydrant System. The AHJ shall ensure that the installation meets all design criteria.

8.7 Inspection and Maintenance of Dry Hydrants.

8.7.1* Dry hydrants shall be inspected at least quarterly and maintained as necessary to keep them in good operating condition.

8.7.2 Thorough surveys shall be conducted, to reveal any deterioration in the water supply situation in ponds, streams, or cisterns.

8.7.3 Grass, brush, and other vegetation shall be kept trimmed and neat. Vegetation shall be cleared for a minimum 3 ft (0.9 m) radius from around hydrants.

8.7.4 The hydrants shall be painted, as needed, with reflective material to enhance their visibility during emergencies, in accordance with 8.4.7.

8.7.5* The hydrants shall be flow tested at least annually with a fire department pump to ensure the minimum design flow is maintained.

8.8* Records for Dry Hydrants. The AHJ shall maintain, in a safe location, maps and records of each dry hydrant installation and the subsequent tests, inspections, maintenance, and repairs to the dry hydrant.

Annex A Explanatory Material

Annex A is not a part of the requirements of this NFPA document but is included for informational purposes only. This annex contains explanatory material, numbered to correspond with the applicable text paragraphs.

A.1.2 In some areas, water supply systems have been installed for domestic water purposes only. These systems could be equipped with hydrants that might not have the volume, pressure, and duration of flow needed for adequate fire-fighting purposes. Where such conditions exist, this standard and annex should be applied in water supply matters.

A.1.3.2 Locations such as these require individual evaluations to determine the minimum water supply to protect the hazards present.

A.3.2.1 Approved. The National Fire Protection Association does not approve, inspect, or certify any installations, procedures, equipment, or materials; nor does it approve or evaluate testing laboratories. In determining the acceptability of installations, procedures, equipment, or materials, the authority having jurisdiction may base acceptance on compliance with NFPA or other appropriate standards. In the absence of such standards, said authority may require evidence of proper installation, procedure, or use. The authority having jurisdiction may also refer to the listings or labeling practices of an organization that is concerned with product evaluations and is thus in a position to determine compliance with appropriate standards for the current production of listed items.

Copyright National Fire Protection Association
Provided by IHS under license with NFPA
No reproduction or networking permitted without license from IHS
Not for Resale

A.3.2.2 Authority Having Jurisdiction (AHJ). The phrase "authority having jurisdiction," or its acronym AHJ, is used in NFPA documents in a broad manner, since jurisdictions and approval agencies vary, as do their responsibilities. Where public safety is primary, the authority having jurisdiction may be a federal, state, local, or other regional department or individual such as a fire chief; fire marshal; chief of a fire prevention bureau, labor department, or health department; building official; electrical inspector; or others having statutory authority. For insurance purposes, an insurance inspection department, rating bureau, or other insurance company representative may be the authority having jurisdiction. In many circumstances, the property owner or his or her designated agent assumes the role of the authority having jurisdiction; at government installations, the commanding officer or departmental official may be the authority having jurisdiction.

A.3.3.8 Exposure Hazard. If a structure is a Class 3 or Class 4 occupancy hazard, it is an exposure hazard if within 50 ft (15.24 m) of another building, regardless of size.

A.3.3.9 Fire Department. The AHJ and the fire department having jurisdiction can be the same agency. The term *fire department* includes any public, governmental, private, industrial, tribal, or military organization engaging in this type of activity.

A.3.3.10 Large Diameter Hose. Supply hose is designed to be used at operating pressures not exceeding 185 psi (1275 kPa). Attack hose is designed for use at operating pressures up to at least 275 psi (1895 kPa).

A.3.3.15 Mutual Aid Agreement. Often the request for such aid to be rendered comes only after an initial response has been made and the emergency incident status has been determined.

A.3.3.20 Suburb or Suburban. Suburban areas can include populous towns or large villages or be located outside the official limits of a densely settled city of 2500 to 50,000 people per census block, or those areas that interface with the outer rim of an urban cluster (UC). Suburban communities usually exist within commuting distance of urban areas but exhibit their own jurisdictional autonomy.

A.3.3.22 Water Supply Officer (WSO). Many progressive rural fire departments depend on a water supply officer (WSO). The WSO is the individual who implements the water supply pre-fire planning. The work of a properly trained and equipped WSO makes it possible for the officer supervising the actual fire attack to operate on the basis of reliable water supply information, to coordinate the attack with the available water supplies, and to avoid diverting his or her attention from the attack to the logistics of backing it up with an adequate water supply.

The WSO's overall responsibilities are to determine water supply requirements of the targeted structures, to plan availability of and access to water sources, and to ensure sufficient water is provided at each fire site. The WSO should maintain and have available a complete set of files, including locations of water sources and lists of available automatic and mutual aid mobile water supply apparatus. Modern technology in computers makes it feasible for even a relatively low-budget department to reduce this data to electronic files that can be maintained at the fire alarm communication center and provided at the scene of every fire.

The WSO participates in the pre-fire planning and in calculating the water supply requirements for the various buildings in the area under the department's jurisdiction. To satisfy these water supply requirements, the WSO should survey the district and the surrounding areas for available water for fire-fighting purposes. Water supplies might exist on the property to be protected or might need to be transported. The WSO should develop preplans and see that the fire department is kept aware of all the water supplies available to the entire area. The WSO maintains close coordination with the fire department training officer and provides assistance in joint water supply training sessions with neighboring fire departments. The WSO should make periodic inspections of all water supplies and structural changes in the department's jurisdiction.

A list of all apparatus, equipment, and personnel available to the WSO's department should be developed. Arrangements should be developed for specific apparatus and personnel to respond under an automatic aid agreement (first alarm response) or a mutual aid agreement (called as needed). Needs will be dictated by the nature of the structure(s) involved and the quantity of water required.

At the fire scene, the WSO's duty is to maintain continuous fire streams by establishing several water-hauling facilities, assembling water-carrying equipment of automatic and mutual aid departments, and calculating estimated arrival times of mobile water supply apparatus, through a thorough knowledge of available water supplies throughout a wide area of fire department jurisdiction.

Developing and sustaining large fire flow requires the use of several water sources as well as several drop tanks where water can be dumped. Therefore, reliable and effective communication is necessary in directing mobile water supplies so that time is not lost at the fill and the dump points. To obtain water supply efficiency, a radio frequency separate from that used for the fireground operations should be assigned to the WSO and the water supply site and the mobile water supply apparatus. The WSO will also require efficient communication with the incident commander.

The WSO (or designee) meets with property owners and others to secure their permission to use the water supply, to develop an all-weather road to the supply, and to install dry hydrants. The installation of roads to, or dry hydrants in, navigable water or wetlands might require a permit from appropriate local, state, or national agencies. The WSO should also consult with the owner in the design of a water source on a property to be protected.

A.4.1.2 Information needed to compute the minimum water supplies that should be collected during building surveys includes the following:

(1) Area of all floors, including attics, basements, and crawl spaces
(2) Height between floors or crawl spaces and in the attics from floor to ridgepole
(3) Construction materials used in each building, including walls, floors, roofs, ceilings, interior partitions, stairs, and so forth
(4) Occupancy(ies) of buildings
(5) Exposures to the structure from other buildings or yard storage and separation distances
(6) Fire protection systems — automatic and manual protection systems, hydrants, yard mains, and other protection facilities
(7) On-premises water supplies, including natural and constructed sources of water

Copyright National Fire Protection Association
Provided by IHS under license with NFPA
No reproduction or networking permitted without license from IHS
Not for Resale

A.4.1.3 The water supply for fire-fighting purposes, as specified in this chapter, is considered the minimum water supply. The AHJ could determine that a municipal-type water supply is warranted (*see Annex G*). This determination might be made as a result of on-site survey of buildings by the fire department having jurisdiction or by review of architectural plans of proposed construction and planned development.

A.4.2.1 Annex H provides tables with precalculated minimum water supplies by occupancy hazard and construction classification where no exposures are present.

A.4.3.1 See Annex H for sample calculations for structures with exposure hazards.

A.4.4 See NFPA 1, *Uniform Fire Code*, Annex H, for guidance on reducing the required water supply at buildings protected by automatic sprinkler systems.

A.5.2 The occupancy hazard classification number is a mathematical factor to be used in calculating minimum water supplies. The lowest occupancy hazard classification number is 3, and it is assigned to the highest hazard group. The highest occupancy hazard classification number is 7, and it is assigned to the lowest hazard group.

A.5.2.1.1 In severe hazard occupancies, the quantity or combustibility of contents is expected to develop very high rates of spread and heat release.

A.5.2.2.1 In high hazard occupancies, the quantity or combustibility of contents is expected to develop high rates of spread and heat release.

A.6.2 The construction classification number is a mathematical factor to be used in calculating minimum water supplies. The slowest burning or lowest hazard type of construction, fire-resistive, is construction classification 0.5. The fastest burning or highest hazard type of construction, wood frame, is construction classification 1.5.

A.6.3.1 The types of construction include five basic types designated by roman numerals as Type I, Type II, Type III, Type IV, and Type V. This system of designating types of construction also includes a specific breakdown of the types of construction through the use of arabic numbers. These numbers follow the roman numeral notation where identifying a type of construction (e.g., Type I-442, Type II-111, Type III-200).

The arabic numbers following each basic type of construction (e.g., Type I, Type II) indicate the fire resistance rating requirements for certain structural elements as follows:

(1) First arabic number: Exterior bearing walls
(2) Second arabic number: Columns, beams, girders, trusses and arches, supporting bearing walls, columns, or loads from more than one floor
(3) Third arabic number: Floor construction

Specific fire resistance ratings are found in Table 6.3.1, and additional information is found in NFPA 220, *Standard on Types of Building Construction.*

A.7.1.1 Although most water is acceptable for fire-fighting purposes, there might be suspended particulates or contaminants that could prove harmful to the fire pump systems or fire-fighting agents being used and should be avoided.

A.7.1.5 For a supply flowing from a stream, the quantity to be considered available is the minimum rate of flow [at not over 15 ft (4.5 m) total lift] during a drought having an average 50-year (2.0 percent chance) recurrence interval. A minimum flow rate of 250 gpm (950 L/min) without interruption for 2 hours as determined by a registered/licensed professional engineer, hydrologist, or similarly qualified person is considered a dependable supply. The maximum rate of flow is determined by testing using the pumpers(s), hose arrangement, and dry hydrant normally used at the site.

Historical stream flow data are available for most streams from the *United States Geological Survey (USGS) Water Resources Information.* These data can also be accessed at http://waterdata.usgs.gov/nwis/sw/. The USGS does not establish flow rates but provides historical data to assist with assessment. Additional assistance is available from individual state and organization contacts at the National Drought Mitigation Center (NDMC). The National Drought Mitigation Center Directory of Drought Contacts can be accessed from their home page at http://www.drought.unl.edu/index.htm.

For an impounded supply, cistern, tank, or storage facility, the quantity to be considered available is the minimum available [at not over 15 ft (4.5 m) total lift] during a drought having an average 50-year (2.0 percent chance) recurrence interval. A minimum of 30,000 gal (113,560 L) (1.1 acre-in.) of pumpable impoundment water or a minimum rate of 250 gpm (950 L-min) without interruption for 2 hours (certified by a registered/licensed professional engineer, hydrologist, or similarly qualified person) is considered a dependable supply. The maximum rate of flow should be determined by testing using the pumpers(s), hose arrangement, and dry hydrant normally used at the site.

The Natural Resources Conservation Service (NRCS) provides *Conservation Practice Standard Dry Hydrant Code 432*, which may be of assistance in determining appropriate drought levels in some states. Conservation practice specifications are detailed requirements for installing the practice in the state. They are localized so that they apply specifically to the geographic area for which they are prepared. Practice standards define the practice where the requirement applies and for installing the practice in the state. These documents are referred to as Field Office Technical Guides (FOTGs). These data can be accessed from the NRCS website at http://www.nrcs.usda.gov/technical/efotg.

A.7.2 During pre-fire planning, the fire department should make arrangements with the owners of water supplies to use the water during an emergency. Such agreements should be made in writing in close cooperation with legal counsel.

The agreements should identify who will build, service, and maintain necessary access roads to the supplies, including such functions as snow plowing in certain areas of the country. Figure A.7.2 shows a sample water usage agreement.

A.7.5 Most artificial lakes are constructed with heavy earth-moving equipment. In order for the property owner to construct a roadway for fire department use, the AHJ should make the property owner aware of the needs of the fire department while the heavy equipment is still on the job.

Accessibility should always be considered. Many recreational lakes are provided with access by roads, driveways, and boat-launching ramps and are available for fire department use. Some large lakes, formed by a dam on a river, might have been constructed for such purposes as to generate power, for flood control, or to regulate the flow of a river. During certain periods of the year (droughts, drawdowns, etc.), such bodies of water can have very low water levels. The water under such conditions might not be accessible to the fire department for drafting by the fire department pumping unit, even where a paved road for boat

Copyright National Fire Protection Association
Provided by IHS under license with NFPA
No reproduction or networking permitted without license from IHS
Not for Resale

SAMPLE WATER USAGE AGREEMENT

It is understood by the owner(s) and the _____ government (hereinafter called the _____or _____ Fire Department) that this agreement is subject to the following conditions:

1. The owner(s) are permitted to terminate this agreement by written notice if the _____ Fire Department breaches any terms and conditions contained in this agreement.
2. Neither this agreement nor any right or duty in whole or in part by the owner(s) under the agreement will be assigned, delegated, or subcontracted without the written consent of the owner(s).
3. All items placed on the property of the owner(s) by the _____ will remain the property of the _____ If this agreement is terminated, the owner(s) will permit the _____ adequate time to remove said property and return the land to its natural state.
4. Any and all debris that is created by and during the establishment of the drafting site will be disposed of by the _____ .
5. No cutting or trimming of trees will be done on the property of the owner(s) unless the _____ Fire Department states that such cutting is/will be necessary to provide uninterrupted and clear travel to the site; however, in no case will such cutting be actually completed without prior approval of the owner(s).
6. The _____ will maintain the area covered by this agreement in a safe condition at all times. This maintenance will also include the groundskeeping around the site.
7. The _____ agrees to save, keep harmless, defend, and indemnify the owner(s) and all its officers, employees, and agents, against any and all liability claims, costs of whatever kind and nature, for injury and death of any person or persons, and for loss or damage to any property occurring in connection with or in any way incidental to or arising out of the occupancy, use, service, operation, or performance of work in connection with this agreement or omissions of the _____ 's employees, agents, or representatives. THIS PROVISO DOES NOT AND WILL NOT APPLY TO ANY EVENTS INVOLVING AN ACTUAL FIRE IN THE STRUCTURE(S) OF THE OWNER(S).
8. The owner(s) as well as any heirs, executors, administrators, and assigns do hereby remise, release, and forever discharge the _____ and any officer, agent, or employee thereof of any liability at law to any person, firm, or legal entity for any act of omission, or any injuries, damages, or deaths claimed to have arisen from the [describe the work to be performed at the site] unless the act of omission amounts to willful misconduct. This waiver is entered into for and in consideration of the drafting site and access roadway. The sufficiency of this consideration is acknowledged by the owner's(s') signature(s) below.
9. The owner(s) grant the rights to the _____ and _____ Fire Department to enter the property cited in this agreement only for the express purpose as stated by owner(s).

_____ (Owner)	_____ (_____ Fire Dept.)
_____ (Owner)	_____ (_____ Road Supt.)
_____ (Date)	_____ (Head of local government)
	_____ [Attorney(ies)]

© 2007 National Fire Protection Association NFPA 1142 (p. 1 of 1)

FIGURE A.7.2 Sample Water Usage Agreement.

Copyright National Fire Protection Association
Provided by IHS under license with NFPA
No reproduction or networking permitted without license from IHS
Not for Resale

launching has been provided and extended into the water at normal water levels for several feet or meters. Under such conditions, other provisions should be made to make the water supply fully accessible to the fire department.

A.7.5(8) Where a 120 ft (36.5 m) diameter turnaround or other means for the mobile water supply apparatus to exit the water supply location is not feasible, a large underground pipe transmission line can be laid from the water supply to the highway and the mobile water supply apparatus filled on the highway right-of-way. However, a turnaround or looped facility could still be needed if the mobile water supply apparatus needs to return to the fire scene over the same roads used to reach the water supply site.

A.8.1 Factors to consider when determining the need and locations for a dry hydrant system should include, but not be limited to, the following:

(1) Current and future population and building trends
(2) Property values protected
(3) Potential for loss
(4) Proximity to structures [e.g., not closer than 100 ft (30 m) from a structure it is designed to protect]
(5) Fire history of the area protected
(6) Current water supply systems
(7) Potential water supply sources and reliability (i.e., constructed or natural)
(8) Cost of project
(9) Other factors of local concern

The Volunteer Fire Assistance program provides grants to rural fire departments for training, organizing, and equipment serving communities with a population of 10,000 or less. The U.S. Forest Service sponsors and funds this program, which is delivered by the State Forester in each state.

Grants may be available through the State Forester's office on a cost-sharing basis. It is appropriate to seek funding from the Volunteer Fire Assistance program for material for dry hydrants since rural fire departments provide much of the initial attack on wildland fires. More information about the Volunteer Fire Assistance program can be found on the USDA Forest Service website at www.fs.fed.us/fire/partners/vfa/. Click on VFA Desk Guide. Contact your local State Forester's office for application procedures. The name and contact information for State Foresters can be found on the National Association of State Foresters website at www.stateforesters.org/SFlist.html, or you can view the homepage at www.stateforesters.org.

A.8.2.2 Permits to install a dry hydrant should be obtained from the AHJ. These can include local, state, and federal agencies charged with fire protection, zoning, water, environmental protection, agriculture and resource conservation, among others.

A.8.3 Since there might be resources available to assist in the planning and installation of dry hydrants, it is desirable to identify and consult with the persons responsible for those resources early in the process.

A.8.3.1 Factors including local topography, climatic conditions, and access to materials will determine the design characteristics of each installation. Distance to the water combined with the difference in elevation between the hydrant head and the water source, and the desired gpm (L/min) flow, will affect the pipe size that should be used.

Local preferences and experience, along with access to materials, will determine the type of pipe and fittings best suited for the job. In some parts of the country, brass and bronze caps and suction hose connections, along with iron, steel, and bituminous cement pipe and fittings, are being used for dry hydrant installations.

A.8.3.2 Many fire service hose appliance manufacturers now offer pre-manufactured and pre-assembled PVC suction screens, hydrant heads, and supports that come ready to attach to the pipe *[see Figure A.8.3.2(a)]*.

Figure A.8.3.2(b) is an example of a dry hydrant design.

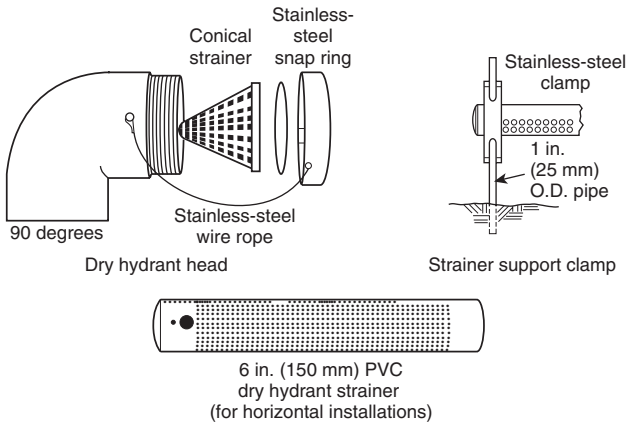

FIGURE A.8.3.2(a) Commercially Available Dry Hydrant Components.

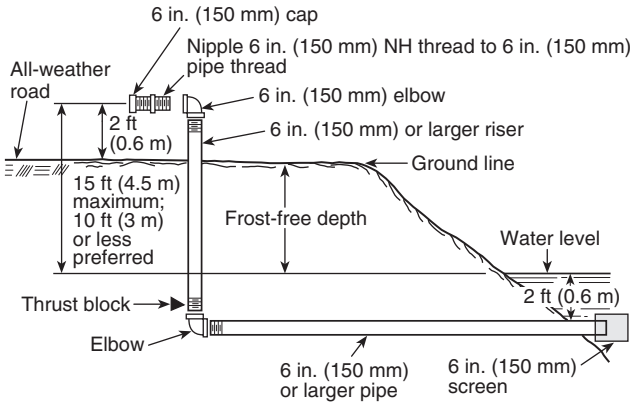

FIGURE A.8.3.2(b) Exploded View of Dry Hydrant Construction.

A.8.3.3 System design requirements should allow for required fire flow, atmospheric pressure, lift, vapor pressure, length of required pipe run, coefficient of materials (C factor), piping configuration, and other design factors approved engineering practices would necessitate.

The following are some factors that should be considered when a dry hydrant system is designed:

(1) Lift should be as low as possible and not exceed 10 ft to 12 ft (3.1 m to 3.7 m), if possible. This loss cannot be overcome by enlarging the pipe size.
(2) Total head loss should not exceed 20 ft (6.1 m), or the pump might not supply its rated gpm (L/min). If the fire department will be using portable pumps on the dry hydrant, those pumps generally have less capability to create a vacuum and head loss needs to be as low as possible.

Copyright National Fire Protection Association
Provided by IHS under license with NFPA
No reproduction or networking permitted without license from IHS
Not for Resale

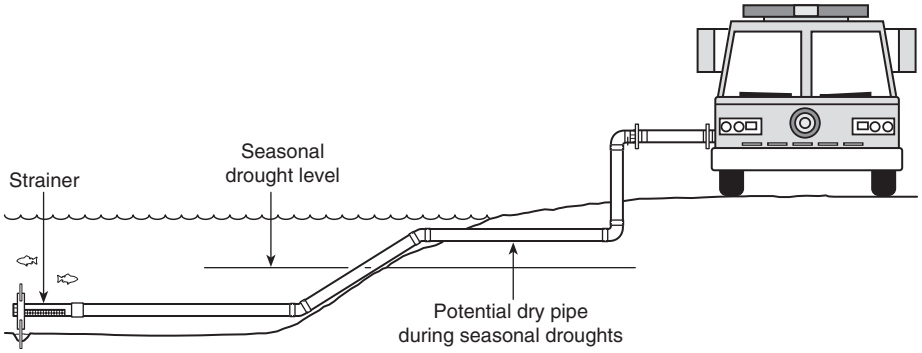

FIGURE A.8.3.5 Typical Dry Hydrant Installation Showing Impact of Seasonal Drought and Freezing Conditions.

A.8.3.4 The required flow at the dry hydrant can exceed the delivery flow shown in Chapter 4 to allow for rapidly filling mobile water supply fire apparatus.

A.8.3.5 See Annex I for information on dry hydrant design.

Figure A.8.3.5 shows a typical dry hydrant installation where freezing is not a concern. During seasonal droughts, more of the pipe will be empty, requiring the primer on the pump to be operated longer before water reaches the pump.

A.8.3.6 Metal piping and exposed PVC pipe surfaces should be primed and painted to prevent deterioration.

A.8.3.7 Preferably no more than two 90-degree elbows should be used. It might be desirable to have a wide-sweep elbow [using two 45-degree elbows and a 2 ft (0.6 m) length of pipe] installed at the bottom of the riser where the lateral run connects. In the event of a broken-off hydrant connection, this could permit sections of 2½ in. (65 mm) suction hose to be inserted down the 6 in. (15.2 cm) pipe to the water and would permit drafting to continue, although at a much reduced rate of flow.

A.8.3.13 Strainers or screens have been locally fabricated by drilling sufficient ⅜ in. (10 mm) holes in a length of pipe to equal 4 times the cross-sectional area of the pipe and capping the end with a removable or hinged cover. Remember to leave a solid strip of pipe approximately 4 in. to 5 in. (100 mm to 125 mm) wide along the top to act as a baffle to prevent whirlpooling during periods of low water.

A.8.4 Each dry hydrant site should be evaluated by the fire department to determine the best way, within the fire department's means, for using the water supply. Figure A.8.4(a) and Figure A.8.4(b) show two examples of how dry hydrant installations can be adapted to support the water supply needs of the fire department for specific situations.

A.8.4.2 It is the responsibility of the AHJ to make inspections of all water sources as often as conditions warrant to note any changes and take appropriate action. This is particularly true during adverse weather conditions, such as droughts, very wet periods, heavy freezing, and following snowstorms.

A.8.4.6 In areas where frost is a problem, the design should ensure that no frost will reach the water in the pipe. One method of preventing the frost from reaching the water in the pipe is to bury the pipe below the frost line and mound up the soil over the pipe and around the riser. Another method is to place an insulating barrier, such as Styrofoam, between the

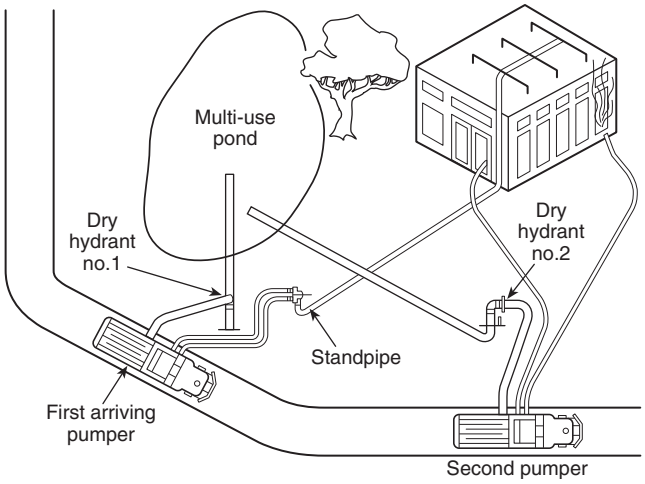

FIGURE A.8.4(a) Multiple Water Supply Points for an Industrial Occupancy.

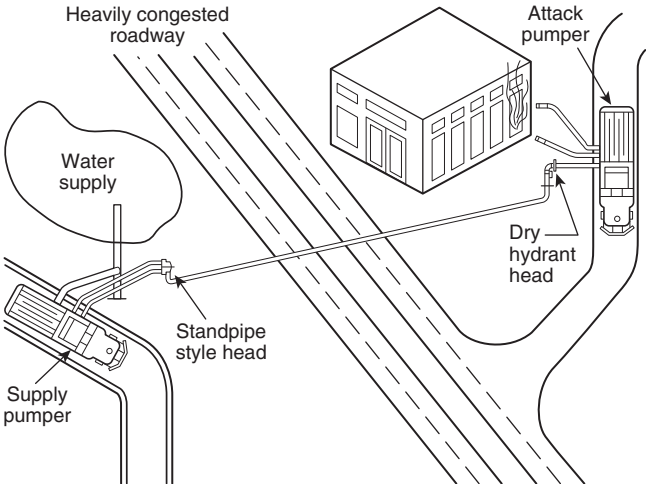

FIGURE A.8.4(b) Overcoming Roadway Obstructions in Supplying Water to a Building.

Copyright National Fire Protection Association
Provided by IHS under license with NFPA
No reproduction or networking permitted without license from IHS
Not for Resale

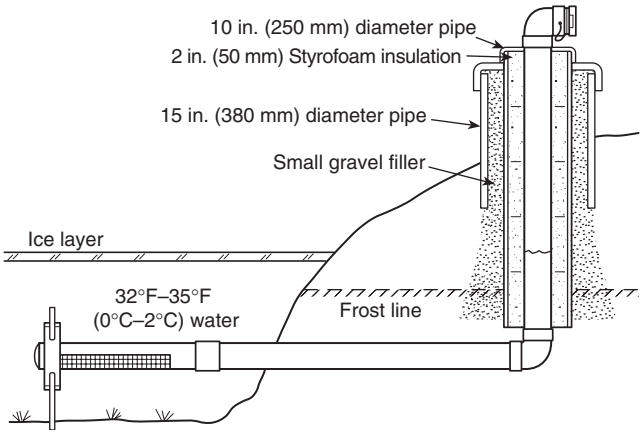

FIGURE A.8.4.6(a) Example of Freeze Protection for Dry Hydrant Subject to Severe Freezing Conditions.

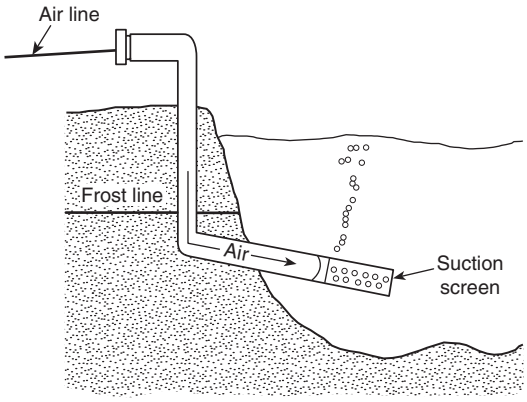

FIGURE A.8.4.6(c) Air Injection Frost-Proofing System.

pipe and the surface as shown in Figure A.8.4.6(a) to prevent the frost from reaching the water in the pipe.

A third method is to inject air into the hydrant and displace the water to prevent freezing. With the water displaced below the frost line, the hydrant is usable year-round. This method requires an air pressure gauge and air chuck to be installed in the cap of the hydrant by drilling and tapping into the metal. *[See Figure A.8.4.6(b).]* The air pressure gauge should read from 0 psi to 10 psi (0 kPa to 69 kPa), as it is important to be able to accurately monitor the air pressure. In most cases, the air pressure will not read over 5 psi to 6 psi (34 kPa to 41 kPa). If there is a chain for the hydrant cap, it should be removed. Teflon® tape is applied to the threads of the gauge and air chuck.

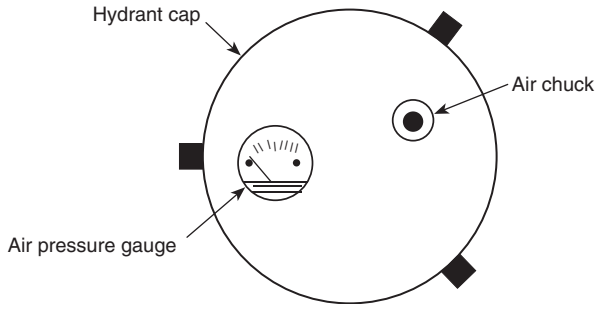

FIGURE A.8.4.6(b) Cap Design for Air Injection System.

Air is injected into the hydrant until it bubbles out of the suction screen or the air pressure gauge no longer rises. *[See Figure A.8.4.6(c).]* This low-pressure air should not cause a safety problem, but all personnel should be advised to remove the hydrant cap slowly to prevent any possible injury. The air pressure gauge should be checked periodically to be sure the water remains displaced in the hydrant. This method requires periodic repressurization. Also, if damage has occurred to cause loss of air pressure, freezing and blockage can occur immediately, making the system unusable in an emergency. The advantage of this method is that if the air chuck or gauge is damaged, it will not affect the airtight integrity of the hydrant while drafting, because the cap is removed for drafting.

It is important in any installation where freezing could occur that the suction screen is placed deep enough in the body of water to ensure that ice will not reach the screen. In such cases, divers might be needed to assist in proper screen placement.

A.8.4.7 The AHJ should ensure that an appropriate sign is erected at each water point identifying the site for fire department emergency use and including the name, or a number, for the water supply. Letters and numbers should be at least 3 in. (76 mm) high, with a ½ in. (13 mm) stroke, and reflective, as allowed by state and local regulations.

A.8.5 The installation of dry hydrants calls for care in measuring water storage capacities. The useful depth of a lake with a dry hydrant installation, for instance, is from the minimum foreseeable low-water surface level to the top of the suction strainer, not to the bottom of the lake, and cannot be less than 2 ft (0.6 m) of water. This becomes a very important point where hydrants are installed on a body of water affected by tide, or on a lake that is lowered to maintain the flow of a river during drought conditions, to generate power, or that freezes over. Pump suction requires submergence below the water surface of 2 ft (0.6 m) or more, depending on the rate of pumping, to prevent the formation of a vortex or whirlpool. Baffle and anti-swirl plates should be added to minimize vortex problems and allow additional water use. The vortex allows air to enter the pump, which can cause the loss of the pump prime. Therefore, pumping rates should be adjusted as the water level is lowered. This factor should be considered by the WSO when estimating the effective rate at which water can be drawn from all suction supplies.

In water sources where heavy sediment and silt could present a problem of clogged suction screens, the intake screens should be raised above the bottom. Figure A.8.5(a) and Figure A.8.5(b) show two examples of how the strainer can be kept out of mud and silt conditions.

A.8.6 A typical installation process includes the need to excavate or trench soil that might be somewhat unstable and which is often on sloping terrain. Only persons with experience and proper equipment to install underground piping should endeavor to install dry hydrant systems.

--`,,```,,,,````-`-`,,`,,`,`,,`---

Copyright National Fire Protection Association
Provided by IHS under license with NFPA
No reproduction or networking permitted without license from IHS
Not for Resale

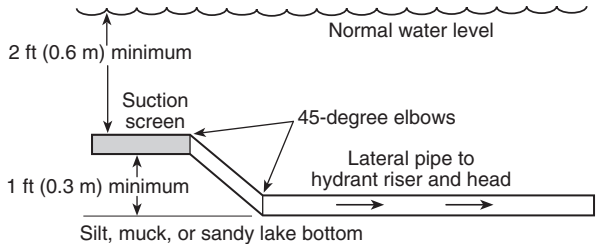

FIGURE A.8.5(a) Offset Screen Installation for Silt and Mud Conditions.

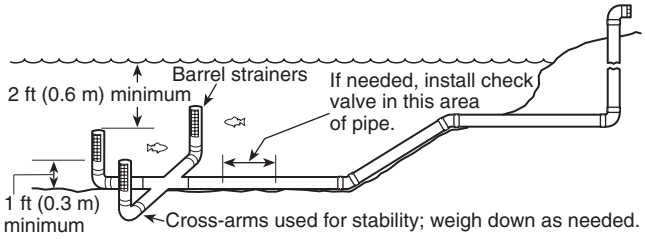

FIGURE A.8.5(b) Vertical Strainer Installation for Silt and Mud Conditions.

A.8.7.1 There could be a need for more frequent inspections due to freezing and droughts. Particular attention should be given to streams and ponds where frequent removal of debris, dredging or excavation of silt, and protection from erosion might be required.

The pond should be maintained as free of aquatic growth as possible. At times it might be necessary to drain the pond to control this growth. Helpful information is available from such sources as the county agricultural extension agent or the U.S. Department of Agriculture.

A.8.7.5 Dry hydrants can be checked and tested by actual drafting as part of the fire department training program. If the tests do not produce the design flow, the fire department should determine what the problem is. It could be necessary to back flush the system to clear leaves and other debris. When a dry hydrant is back flushed, pump pressures should not exceed 20 psi.

A.8.8 Individual records should be kept for each water source. Each water source should also be noted on a master grid map of the area in a manner that will indicate the water source record that contains the pertinent data on that water source.

The water source record should include type of source (stream, cistern, domestic system, etc.), point of access [100 ft (30.5 m) north of barn, etc.], gallons available [flows minimum 250 gpm (950 L/min), 10,000 gal (37,850 L) storage, etc.], and any particular problem such as weather condition or seasonal fluctuations that can make a source unusable. It is good practice to attach a photograph of the water point to the record.

Figure A.8.8(a) shows one way of keeping the information needed on a water source record.

A map showing the location and amount of water available at each water site should be kept at the fire alarm dispatch center, and copies should be carried on the apparatus most likely to arrive first at the scene, with additional copies in the incident commander's vehicle and the WSO's vehicle.

The water source records should be used as the basis of regular inspections to make sure the source continues to be available and to note any improvement or deterioration of its usefulness. It is suggested that a separate record of inspection and maintenance be maintained on each dry hydrant. *[See Figure A.8.8(b).]*

Copyright National Fire Protection Association
Provided by IHS under license with NFPA
No reproduction or networking permitted without license from IHS
Not for Resale

Dry Hydrant Water Source Record

Dry hydrant location: *On the north side of Rt. 9B, 1.7 miles west of US 441. All-weather access road runs 500 ft to hydrant location.*

Latitude/Longitude: *37.345 / 118.575* Datum: *NAD 83*
Dry hydrant ID number: *SFD 06* Design flow rate: 1000 gpm

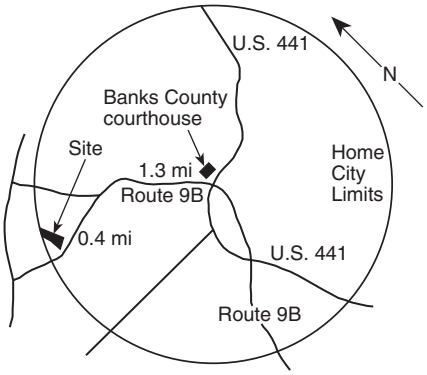

(a) General Location

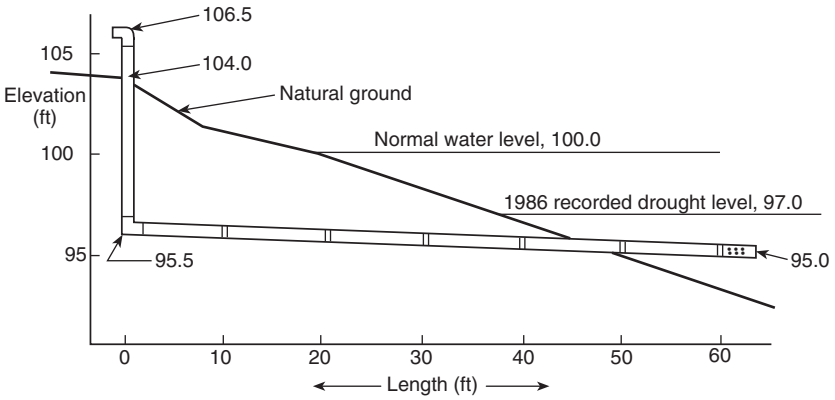

(c) Profile of Pipeline

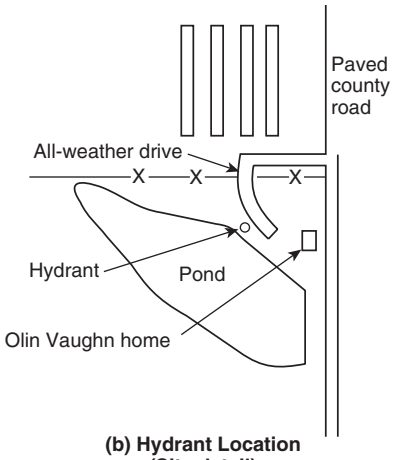

(b) Hydrant Location (Site detail)

Quantities
Source of water — pond and stream
Size of normal pool — 0.84 acre
Size of drought pool — 0.38 acre
Minimum draw — 6.5 ft
Maximum draw — 11.5 ft
Available water at normal level — 993,778 gal
Available water at drought level — 338,862 gal

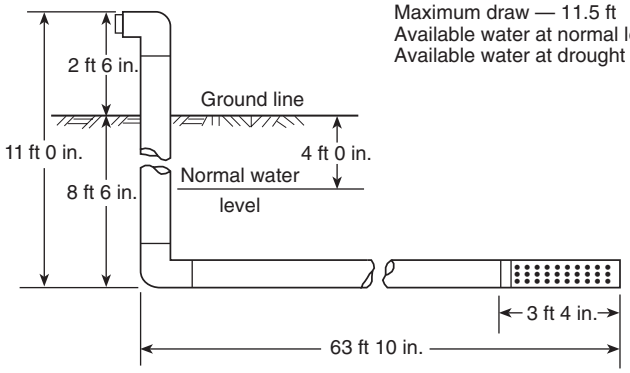

(d) Pipeline Dimensions

Note: For SI units, 1 in. = 25.4 mm; 1 ft = 0.3048 m.

FIGURE A.8.8(a) Example of Dry Hydrant Water Source Record.

Copyright National Fire Protection Association
Provided by IHS under license with NFPA
No reproduction or networking permitted without license from IHS
Not for Resale

DRY HYDRANT INSPECTION AND MAINTENANCE RECORD

Dry hydrant location: _____

_____

Latitude/Longitude: _____ / _____ Datum: _____

Dry hydrant ID number: _____ Design flow rate: _____

Elevation of site above sea level: _____

Date of inspection: _____ By: _____

Depth of water from surface to top of strainer: _____

Amount of water available leaving 2 ft (0.6 m) over strainer: _____

Environmental conditions affecting hydrant (silting, debris, vegetation growth): _____

_____

Erosion around hydrant, access road, bank of water supply: _____

_____

System back flushed? ❑ Yes ❑ No Problems found: _____

_____

_____

Flow available by actual test: _____

Weed control measures taken: _____

_____

Condition of access road, drainage: _____

_____

_____

Sign present? ❑ Yes ❑ No Accuracy and clarity of information on sign: _____

_____

Maintenance performed, special observations, remarks: _____

_____

_____

_____

_____

_____

_____

_____

© 2007 National Fire Protection Association NFPA 1142 (p. 1 of 1)

FIGURE A.8.8(b) Inspection and Maintenance Record for Dry Hydrant.

Copyright National Fire Protection Association
Provided by IHS under license with NFPA
No reproduction or networking permitted without license from IHS Not for Resale

Annex B Water Supply

This annex is not a part of the requirements of this NFPA document but is included for informational purposes only.

B.1 General. The fire department operating without a water system or with hydrants on a weak distribution system has the following three means of getting adequate water for fire fighting:

(1) From supplies at or near the incident scene, which can be either constructed or natural supplies
(2) From supplies transported to the scene
(3) By relaying water from a source to the fire scene using large-diameter hose

B.2 Locating Water Sources. Aircraft and aerial photographs can be very helpful in a survey of static water availability. Such photographs are usually available from the county agriculture department or the county office of planning and zoning. Up-to-date topographical maps from the United States Geological Survey also can be of value in surveying an area for available water sources. Once sites are located, they should be prepared for use according to the recommendations of this annex.

B.3 Natural Water Sources.

B.3.1 Streams. Streams, including rivers, bays, creeks, and irrigation canals, can represent a continuously flowing source of substantial capacity. Where assessing water from flowing streams as potential water sources, the fire department should consider the following factors:

(1) *Flowing Capacity.* The stream should deliver water in capacities compatible with those outlined in the water supply requirements of this standard. *(See Chapter 4.)*
(2) *Climatic Characteristics.* Streams that deliver water throughout the year and are not susceptible to drought are desirable for fire protection. However, where such streams are not available, a combination of supplies might be necessary. In many sections of the country, streams cannot be relied on during drought seasons. If the stream is subject to flooding or freezing, special evolutions might be necessary to make the stream usable under such conditions. Similar circumstances might exist during wet periods or when the ground is covered with snow.
(3) *Accessibility.* A river or other source of water might not be accessible to the fire department for use during a fire. Distance and terrain from the all-weather road to the source should be such as to make the water readily available. In some cases, special equipment might be needed to obtain the water. Where roadways are provided to the water source, they should be constructed in accordance with Section 7.5.
(4) *Calculating the Flow of a Stream.* A simple method for estimating the flow of water in a stream is to measure the width and depth of the stream. Drop a cork or any light floating object into the water, and determine the time it takes the cork to travel 10 ft (3.1 m). To obtain complete accuracy, the sides of the stream should be perpendicular, the bottom flat, and the floating object should not be affected by the wind. Where the sides and bottom of the stream are not uniform, the width and depth can be averaged.

For example, in a stream that is 4 ft (1.2 m) wide and 6 in. (150 mm) deep, the flow of water is such that it takes 45 seconds for a cork to travel 10 ft (3.1 m). Therefore the following formula should be used:

$$W \times D \times TD = \text{ft}^3\left(\text{m}^3\right) \text{ of water}$$

where:
W = width of 4 ft (1.2 m)
D = depth of 6 in. (150 mm) = ½ ft (0.15 m)
TD = travel distance of 10 ft (3.1 m)

Calculate the flow of water as follows:

$$4 \text{ ft } (1.2 \text{ m}) \times ½ \text{ ft } (0.15 \text{ m}) \times 10 \text{ ft } (3.1 \text{ m}) = 20 \text{ ft}^3 \ (0.56 \text{ m}^3)$$

The cork takes 45 seconds to flow the 10 ft (3.1 m) distance. Divide the volume by the time as follows:

$$20 \text{ ft}^3 \ (0.56 \text{ m}^3)/45 \text{ sec} = 0.44 \text{ ft}^3/\text{sec} \ (0.0125 \text{ m}^3/\text{sec})$$

Convert the flow from seconds to minutes:

$$0.444 \text{ ft}^3/\text{sec} \ (0.0125 \text{ m}^3/\text{sec}) \times 60 \text{ sec} = 26.64 \text{ ft}^3/\text{min} \ (0.75 \text{ m}^3/\text{min})$$

Using conversion factors [1 ft^3 = 7.48 gal (28.31 L); and 1 gal = 3.785 L], convert these values to gal/min (L/min):

$$26.64 \text{ ft}^3/\text{min} \times 7.48 = 199.27 \text{ gal/min } (754 \text{ L/min})$$

For assistance in more accurately determining stream flow, contact the state department of natural resources, soil conservation service, county cooperative extension agents, or U.S. Geological Survey.

B.3.2 Ponds. Ponds can include lakes or farm ponds used for watering livestock, irrigation, fish culture, recreation, or other purposes, while serving a secondary function for fire protection. Valuable information concerning the design of ponds can be obtained from county agricultural agents, cooperative extension offices, county engineers, and so forth. Most of the factors for assessing water from streams are pertinent to ponds, with the following items to be considered:

(1) Minimum annual level should be adequate to meet water supply needs of the fire potential the pond serves.
(2) Freezing of a stationary water supply, contrasted with the flowing stream, presents a greater problem.
(3) Silt and debris can accumulate in a pond or lake, reducing its actual capacity, while its surface area and level remain constant. These conditions can provide a deceptive impression of capacity and call for at least seasonal inspections. See Figure A.8.5(b) for an example of protective measures for silt and mud conditions.

B.3.3 Other Natural Sources. Other natural sources might include springs and artesian wells. Individual springs and occasional artesian water supplies exist in some areas and, again, while generally of more limited capacity, they can be a useful water supply, subject to reasonable application of the factors listed for ponds and streams. In many cases, it might be necessary to create a temporary natural pool or pond with a salvage cover for the purpose of collecting enough water for the fire department's use.

B.4 Cisterns.

B.4.1 General. Cisterns are one of the oldest sources of emergency water supply, both for fire fighting and drought storage. They are very important sources of water for domestic consumption, as well as for fire fighting and drought storage in many rural and beach areas.

Cisterns should have a minimum usable volume as determined by the AHJ, based on the methods described in Chapter 4. There is no real limit to the maximum capacity. It is convenient for a cistern to be adjacent to a public right-of-way for winter maintenance and access. *[See Figure B.4.1(a).]* The dry hydrant associated with the cistern should be located at least 100 ft (30 m) from the closest structure.

Copyright National Fire Protection Association
Provided by IHS under license with NFPA
No reproduction or networking permitted without license from IHS
Not for Resale

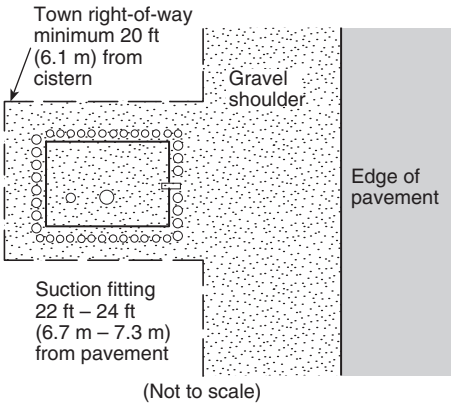

FIGURE B.4.1(a) Cistern Site.

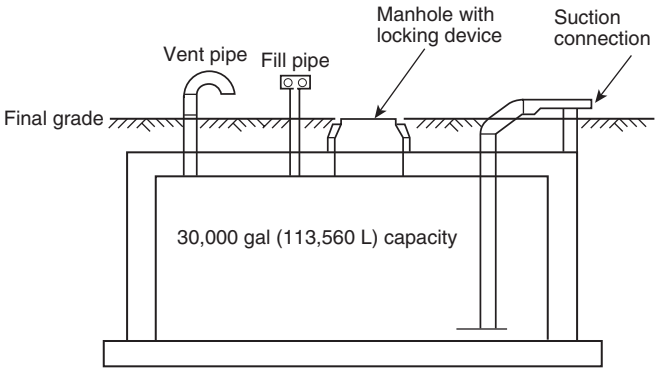

FIGURE B.4.1(b) Typical Cistern.

The water level of a cistern can be maintained by rainfall, water pumped from a well, water hauled by a mobile water supply apparatus, or the seasonal high water of a stream or river. The top of the cistern should be a minimum of 2 ft (0.6 m) below grade.

Cisterns should be capped for safety, but they should have openings to permit inspections and use of suction hose when needed. *[See Figure B.4.1(b).]*

B.4.2 Construction of Cisterns. Construction of cisterns is governed by local conditions of soil and material availability. Some engineering considerations to be used in designing cisterns include the following:

(1) The base, walls, and roof should be designed for highway loading and for the prevailing soil conditions.
(2) If groundwater conditions are high, the cistern should not float when it is empty.
(3) Suction piping should be designed to minimize whirlpooling.
(4) Vent piping should be of sufficient size to allow drafting from the cistern at the maximum capability permitted by the suction piping.

Maintenance factors to be considered by the fire department include the danger of silting, evaporation or other low water conditions, and the freezing problems discussed in B.3.2.

B.4.3 Cistern Specifications. Some governing bodies require developers to provide cisterns with all subdivisions that are constructed, where on-site water systems are not available or adequate.

The following specifications for cistern design and construction are used by the New Boston Fire Department, New Boston, NH:

(1) Cisterns must be located no more than 2200 ft (671 m) truck travel distance from the nearest lot line of the furthermost lot.
(2) The design of a cistern must be trouble-free and last a lifetime.
(3) The cistern capacity must be 30,000 gal (113,560 L) minimum, available through the suction piping system.
(4) The suction piping system must be capable of delivering 1000 gpm (3800 L/min).
(5) The design of the cistern must be submitted to the AHJ for approval prior to construction. All plans must be signed by a licensed/registered professional engineer.
(6) The entire cistern must be rated for highway loading, unless specifically exempted by the authority having jurisdiction.
(7) Each cistern must be sited to the particular location by a registered engineer and approved by the AHJ.
(8) Cast-in-place concrete must achieve a 28-day strength of a gauge pressure of 3000 psi (20,700 kPa). It must be placed with a minimum of 4 in. (100 mm) slump and vibrated in a professional manner.
(9) The concrete must be mixed, placed, and cured without the use of calcium chloride. Winter placement and curing must follow the accepted American Concrete Institute (ACI) codes.
(10) All suction and fill piping must be American Society for Testing and Materials (ASTM) Schedule 40 steel. All vent piping must be ASTM Schedule 40 PVC.
(11) All PVC piping must have glued joints.
(12) Any reducing fittings used in the piping must be an eccentric reducer.
(13) The final suction connection must be 4½ in. (115 mm) male National Standard hose thread and must be capped.
(14) The filler pipe siamese must have 2½ in. (65 mm) female National Standard threads with plastic caps.
(15) The entire cistern must be completed and inspected before any backfilling is done.
(16) All backfill material must be screened gravel with no stones larger than 1½ in. (38 mm) and must be compacted to 95 percent in accordance with ASTM D 1557, *Standard Test Methods for Laboratory Compaction Characteristics of Soil Using Modified Effort [56,000 ft-lbf/ft^3 (2,700 kN-m/m^3)]*.
(17) Bedding for the cistern must consist of a minimum of 12 in. (300 mm) of ¾ in. to 1½ in. (20 mm to 40 mm) crushed, washed stone, compacted. No fill can be used under the stone.
(18) The filler pipe siamese must be 36 in. (900 mm) above final backfill grade.
(19) The suction pipe connection must be 20 in. to 24 in. (500 mm to 600 mm) above the level of the shoulder where vehicle wheels will be located when the cistern is in use.
(20) The suction pipe must be supported either to the top of the tank or to a level below the frost line.
(21) The base must be designed so that the cistern will not float when empty.

Copyright National Fire Protection Association
Provided by IHS under license with NFPA
No reproduction or networking permitted without license from IHS
Not for Resale

(22) The perimeter of the cistern at floor/wall joint must be sealed with 8 in. (200 mm) PVC waterstop.
(23) After backfilling, the cistern must be protected by fencing or large stones.
(24) Backfill over the tank must have one of the following characteristics:
  (a) 4 ft (1.2 m) of fill.
  (b) The top and highest 2 ft (0.6 m) of sides of the cistern must be insulated with vermin-resistant foam insulation and 2 ft (0.6 m) of fill.
  (c) All backfill must extend 10 ft (3.1 m) beyond the edge of the cistern, and have a maximum 3:1 slope, loamed and seeded.
(25) The bottom of the suction pipe to the pumper connection must not exceed 14 ft (4.25 m) vertical distance.
(26) The pitch of the shoulder and vehicle pad from the edge of the pavement to the pumper suction connection must be 1 percent to 6 percent downgrade.
(27) The shoulder and vehicle pad must be of sufficient length to permit convenient access to suction connection when the pumper is set at 45 degrees to road.
(28) All construction, backfill, and grading material must be in accordance with proper construction practices and acceptable to the AHJ.
(29) All horizontal suction piping must slope slightly uphill toward the pumper connection.
(30) The installer is responsible for completely filling the cistern and maintaining it full until the installation is accepted by the AHJ.

As an alternative where soil and groundwater level conditions permit, a properly designed well can be used to provide water. Figure B.4.3 illustrates a typical well with a dry hydrant installed. Local conditions must be considered in all cases. A high water table that allows a suction lift of not more than 10 ft (3 m) must be present. The well must be installed in gravel or sand, not clay.

The same design is suitable for a cistern if the bottom of the casing is not perforated.

B.4.4 Guide to Cistern Capacity. The following formula can also be used to calculate the usable amount of water in a round cistern with vertical sides:

$$23.56 \times \left(\frac{D_f}{2} \right)^2 \times H_f = \text{capacity in gallons}$$

$$3141.6 \times \left(\frac{D_m}{2} \right)^2 \times H_m = \text{capacity in liters}$$

where:
D_f = inside diameter of the cistern in feet, or D_m inside diameter in meters
H_f = usable depth of water in the cistern in feet, or H_m = usable depth of water in meters

The following formula can be used to calculate the usable amount of water in a rectangular cistern:

$L_f \times W_f \times H_f \times 7.5$ gal = capacity in gallons, or
$L_m \times W_m \times H_m \times 1000$ L = capacity in liters

where:

L_f = length in feet, or L_m = length in meters
W_f = width in feet, or W_m = width in meters
H_f = usable depth of water in feet, or H_m = usable depth of water in meters

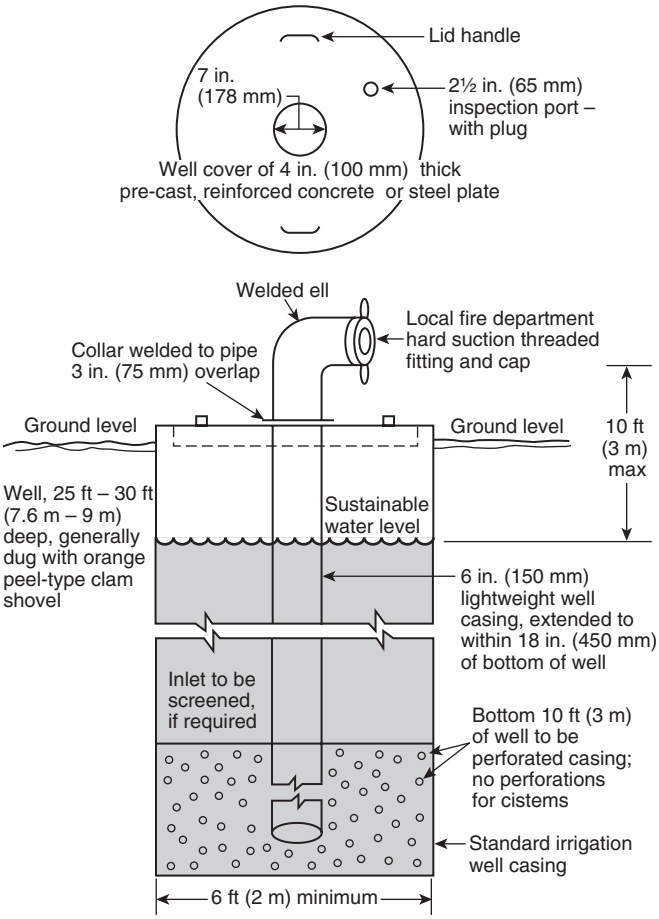

FIGURE B.4.3 Typical Well or Cistern with Dry Hydrant Installed.

When reference is made to water depths in cisterns, swimming pools, streams, lakes, and other sources, it should always be remembered that the depth with which the fire fighter is concerned is the usable depth. In a cistern, a bottom bed of gravel protecting a dry hydrant inlet, for instance, reduces the usable depth of the area above the gravel.

B.5 Fiberglass Underground Storage Tanks. Some fire departments are using new fiberglass underground storage tanks to store water for fire protection. This application is very similar to using a cistern, except that the tanks are manufactured off site whereas a cistern is built on site. These tanks are fitted with suction and fill piping and placed strategically around the community. *(See Figure B.5.)*

B.6 Swimming Pools. Swimming pools are an increasingly common source of water for fire protection. Even in some areas with normally adequate water supplies from hydrants, pools have been a factor in providing protection, such as where water demands have exceeded availability because of wildfires or natural disasters. Swimming pools provide an advantage in that they are sources of clean water, but a major drawback is their poor accessibility for large, heavy fire apparatus. There are some areas of the country in which there are more swimming pools than fire hydrants. If the fire department intends to use a swimming pool as a supply of water, it is a good practice to work with the pool owner and preplan how the water will be accessed.

Copyright National Fire Protection Association
Provided by IHS under license with NFPA
No reproduction or networking permitted without license from IHS
Not for Resale

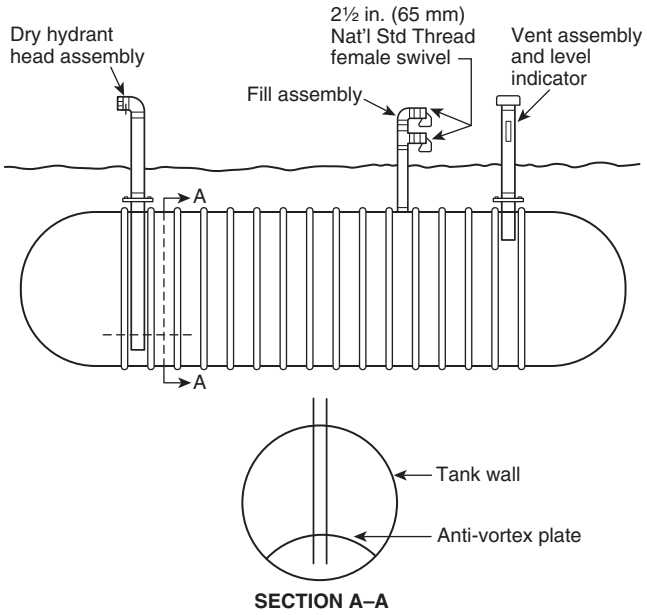

FIGURE B.5 Example of Construction of Water Cisterns Using an Underground Fiberglass Storage Tank.

B.6.1 Pool Accessibility. If fire department accessibility is considered at the time the pool is designed, a usable water supply should be available to the fire department for directly supplying hose lines or filling mobile water supply apparatus. Most swimming pools are built in areas requiring security fencing or walls, and these can complicate accessibility. Fences and walls can be designed for fire department use or, depending on construction, can be entered forcibly. In most cases, a solution to the problem of accessibility can be achieved through preplanning. A solution might call for long lengths of suction hose, portable pumps, dry hydrants, siphon ejectors, or properly spaced gates. Lightweight or flexible-type suction hose can be advantageous in these situations. Portable (or floating) pumps designed for large-volume delivery at limited pressures can deliver water to portable folding tanks or fire department pumpers and are frequently ideal where accessibility problems exist. *(See Section E.3.)*

A swimming pool located virtually under the eaves of a burning house can be a very poor location from which to pump if there is fire exposure to the work area. Pumping from a neighboring pool if it is close enough or using a water-hauling program is frequently preferable to pumping from a pool adjacent to the burning house.

B.6.2 Pool Capacity. The following formula is a short-form method of estimating pool capacity:

$$L_f \times W_f \times D_f \times 7.5 \text{ gal/ft}^3 = \text{estimated capacity in gallons}$$

or

$$L_m \times W_m \times D_m \times 1000 \text{ L/m}^3 = \text{estimated capacity in liters}$$

where:
L_f = length in feet or L_m = length in meters
W_f = width in feet or W_m = width in meters
D_f = estimated average depth from water line in feet or D_m = estimated average depth from water line in meters

Note that the dimensions used in the formula should be an average if the pool is of a stylized construction.

Consideration should be given for providing more suction hose on fire apparatus responding in areas dependent on swimming pools. Fast rigging of such suction hose demands special training. Using long lengths of hose over walls and other obstacles typical of areas around swimming pools demands techniques other than those used for drafting from ponds or streams. Adequate pre-fire planning will provide knowledge of individual pools so that the method of obtaining water at the property is known.

B.6.3 Care in Use of Pools. Care has to be exercised to be sure structural damage will not be done to a pool and the surrounding area if the water is used for fire fighting. Lightly built cement, Gunite®, or poured concrete pools can present a danger of structural damage, cracking, or collapse when drained. If a pool is located in extremely wet soil, it will tend to float upwards when drained. In these cases, the pool should be refilled as soon as the fire is under control and mobile water supply apparatus can be released from fire duties.

Some pools are compacted earth covered by a plastic surfacing or light-gauge metal panels placed against such earth or a special fill. Such pools can collapse internally if emptied. It might be possible to use a limited portion of such water sources but not possible to use the entire depth apparently available. It might be prudent not to use these pools at all.

Another consideration is whether the ground surrounding a pool will support the weight of a fire department vehicle without collapsing. The fire department should consult with the builder or installer of any pool being considered as a water source to determine the various pool limitations.

B.7 Livestock Watering Ponds and Tanks. Many farms have livestock water tanks and other similar water facilities. If the owner is made aware of the water needs for fire fighting on the farm, such tanks and ponds can be sized to provide adequate volume for both farm and fire department use and located to be readily available to the fire department. Tanks should be placed on the edge of the barnyard where they are accessible for fire apparatus to take suction through a connection on the tank or with suction hose directly into the tank. These watering tanks and ponds are often filled and maintained full by a pump operated by a windmill or by an electric pump. Figure B.7 illustrates a dry hydrant system for holding tanks and procedures for successfully using the system as a water source.

B.8 Stored Water for Sprinkler Systems. In some rural areas, the only large water supply might be the storage provided for the sprinkler system in a building. The supply might be from an underground water distribution system, a pond or suction tank with pumps, an elevated tank, or a combination of these. In many cases, pre-plan arrangements can be made to use some of the stored water for fire protection away from the property. This is particularly true if the property owner is contacted before installation of the sprinkler protection, as it might be necessary to increase the storage capacity or to install a hydrant that is accessible to the fire department and connected to the private yard distribution system.

Extreme care should be exercised in the use of water supplies provided for sprinkler protection. Unless the water supply has been specifically designed to provide water for fire protection away from the property, it should not be used. *(See Annex F for additional information on sprinkler systems.)*

Copyright National Fire Protection Association
Provided by IHS under license with NFPA
No reproduction or networking permitted without license from IHS
Not for Resale

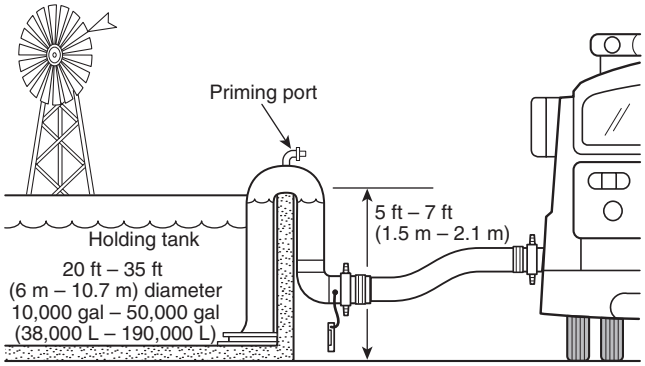

(1) Connect hard suction
(2) Open apparatus tank valve and flood suction hose
(3) Connect hand priming pump to priming port
(4) Operate priming pump until water is flowing from priming pump
(5) Engage the fire pump and open needed discharge lines

FIGURE B.7 Drafting Procedure for Farm Holding Tanks.

B.9 Driven Wells. Wells, well systems, and irrigation pumps are becoming increasingly popular as water supplies for fire-fighting purposes at industrial properties, shopping centers, subdivisions, and farmhouses located in rural areas beyond the reach of a municipal-type water distribution system.

In areas with suitable soil conditions such as those of a very sandy nature, it might be possible to use driven wells or water-jetted wells to obtain water for fire fighting. These wells are, in essence, pipes driven into the ground, usually with perforations about the base to permit entry of water. From the threaded pipe head (or a fitting attached to the body of the pipe), a pump connection can be made to draft water the same as from a well head hydrant. A high water table is a prerequisite to using this method. Fire-fighting units in areas where well head hydrants are available should have the necessary adaptors to utilize such sites.

B.10 Pre-Fire Planning for Water Supply Operations. Once the water supply requirements have been calculated and the water sources identified, the type and amount of fire equipment needed to respond on the first alarm to deliver that requirement should be determined. The objective should be to have the response of fire apparatus match the need to deliver a constant flow at least equal to the water flow requirements. The fire department should develop standard operating guidelines for hauling or relaying water to fires. The guidelines should be verified under training conditions prior to a fire emergency. Training exercises should include locating fire equipment at a fire scene to protect the fire property and the exposures, establishing operations at the water source to either fill water tanks on fire apparatus or pump into a relay, designating fire lanes or routes between the water source and the incident scene, and reviewing and modifying the operations to meet unusual conditions. Once implemented, the standard operating guidelines should be initiated for all reported structure fires, recognizing that they can be discontinued or canceled after the officer in charge has evaluated the fire and determined that additional water supply will not be needed.

Annex C Mobile Water Supply Apparatus

This annex is not a part of the requirements of this NFPA document but is included for informational purposes only.

C.1 General. The fire service has often experienced fire control difficulties in isolated areas. Although difficulties vary, one of the major problems encountered is the lack of an adequate water supply. The availability of an adequate amount of water for control and extinguishment is a major consideration for many fire officials and a factor that significantly influences their fire-fighting tactical decisions. Fire department training should emphasize the need to maintain an effective water supply from source to application.

A limited water supply condition during a working fire can adversely affect all phases of fire fighting. This annex discusses the options and procedures for moving water where municipal-type water distribution systems are nonexistent or are substandard. When the water supply is provided from a dry hydrant, a lake, a cistern, a swimming pool, or other static source, operating procedures should include those activities required for transporting the water from the supply site to the fire. Fire departments generally commit to the draft or supply location using fire department pumper(s) with a pump capacity of 750 gpm (2850 L/min) or more, and a minimum booster tank size of 500 gal (1900 L).

In some departments, pumping apparatus assigned to water supply functions require little equipment beyond the apparatus pumps, the hose for filling mobile water supply apparatus, and some preconnected hand lines. There are many water source pumping options, and they vary widely depending on need and available resources.

Apparatus used to haul water have reflected a great deal of ingenuity, but in some instances at the risk of fire fighter safety. In the interest of improving operational flexibility and safety, some rural and suburban fire departments now use standard pumpers and mobile water supply apparatus with tanks in the 1000 gal to 1500 gal (3800 L to 5700 L) range. Techniques for loading and unloading mobile water supply apparatus have also seen significant improvements. The goal during every fire evolution is to maintain the required fire flow throughout the entire fire-fighting operation.

Mobile water supply apparatus serve as a necessary asset in many suburban and rural fire departments. When the necessary water-carrying capacity exceeds local capability, a sound mutual or automatic aid program can provide the necessary resources.

Such arrangements are far superior to the use of unsafe makeshift equipment that is not designed for emergency service. Departments that build apparatus that are not in compliance with NFPA 1901, *Standard for Automotive Fire Apparatus*, should give serious consideration to the safety, reliability, and serviceability of the equipment in question. A department that depends on an assortment of mobile water supply apparatus primarily designed for other uses should seek expert assistance to check the operational safety of the equipment.

The design and construction of a mobile water supply apparatus requires those involved to determine the gross vehicle weight rating (GVWR) of a chassis necessary to safely carry the maximum load and the resulting weight distribution, the engine horsepower needed to adequately perform on the road and at the fire scene, the appropriate brake system, and gear train combination best suited for operations in that specific locale. Apparatus components, such as tank baffling, venting, loading and offloading systems, and the center of gravity, are just as important as the engine, axles, and other driveline components.

Copyright National Fire Protection Association
Provided by IHS under license with NFPA
No reproduction or networking permitted without license from IHS
Not for Resale

Some fire departments that have pumpers equipped with large water tanks have retrofitted their apparatus with some form of a quick-dump system (large gravity dump, jet-assist device, etc.).

Today's commercial mobile water supply apparatus can be designed to employ one of two possible technologies (or a combination of both) for loading, and four alternatives for unloading. Mobile water supply apparatus can be equipped with standard centrifugal fire pumps, positive displacement pressure/vacuum pump systems, or a combination of pumping equipment configurations.

C.2 Specifications for Mobile Water Supply Apparatus. Careful attention should be paid to ensure that engine, chassis, water tank baffling, vehicle center of gravity, and brakes are adequate for mobile water supply apparatus. NFPA 1901 covers mobile water supply apparatus, and it is recommended that the standard be followed.

The tank should be properly constructed and baffled. Particular attention should be paid to flow rates to and from the tank. Consideration should be given to how the mobile water supply apparatus will discharge its water to the receiving vehicle, portable tank, or other equipment as rapidly as possible. It is essential that the mobile water supply apparatus get back on the road, reload, and bring another load of water to the fireground rapidly. Some departments install large gravity dump valves, while other departments use a jet dump arrangement to reduce the emptying time.

The terrain, weather, and bridge and road conditions expected should be considered when buying or building mobile water supply apparatus.

It is suggested that, for a mobile water supply apparatus with a capacity greater than 1500 gal (5700 L), it might be necessary to utilize tandem rear axles or a semitrailer, depending on tank size and chassis characteristics. It is further recommended that the maximum water tank capacity for mobile water supply apparatus not exceed 4800 gal (18,200 L) or 20 tons (18,200 kg) of water. The cost of two smaller mobile water supply apparatus might cost about the same as one large mobile water supply apparatus. Mobility, cost of upkeep, personnel availability and costs, state weight restrictions, and bridge weight restrictions are factors to consider in the selection of mobile water supply apparatus.

The weight of the vehicle plus the load carried should not be greater than the rated capacity of the tires. Compliance should be determined by weighing the loaded apparatus.

C.3 Regulations and Restrictions. Regardless of rear axle configuration, specific consideration should be given to the state's legal weight-per-axle requirement. Government entities can have single-axle weight limits, which are imposed based on road surface conditions and the longevity of highways. The need for commercial driver's license, vehicle registration, insurance coverage, and other issues should be addressed.

The load capacity of roads and bridges is a serious consideration when planning purchases of fire apparatus. Mobile water supply apparatus have to be restricted to a load capacity that will not cause overloading of roads and bridges. A good policy for every fire department is to check the bridge load restrictions before purchasing a new apparatus.

C.4 Mobile Water Supply Capacity. Many departments find that a minimum tank capacity of 1000 gal (3800 L) facilitates meeting the minimum water requirements outlined in this standard where water supplies are readily available.

C.5 Tank Baffles. The tank baffle or swash partition is often considered to be the weakest and most dangerous area of fire engine and mobile water supply design and construction. Careful consideration should be given to baffles by the designers and builders of tanks.

C.6 Plumbing. It is important to have an outlet of adequate size to empty the tank quickly. Table C.6 illustrates the emptying time for a 1600 gal (6060 L) water tank by gravity flow using different outlet sizes.

Adequately sized plumbing is also important in those mobile water supply apparatus equipped with a pump with a jet dump arrangement. Many jet dump arrangements are capable of discharging at a rate of 1000 gpm (3800 L/min) or more.

Proper venting is imperative for safe and rapid filling and emptying of tanks. As a minimum, the vent opening should be four times the cross-sectional area of the inlet. Inadequate venting can cause the tank to bow outward when it is being filled rapidly or can impair the discharge flow when the tank is emptying.

If the mobile water supply apparatus is equipped with a fire pump, adequately sized pump-to-tank plumbing is also essential to provide for rapid discharge of water through the pump. In a mobile water supply operation in which the emphasis is placed on rapid, low-pressure emptying of a tank, undersized plumbing can be a major limitation to efficiency.

Mobile water supply apparatus should be designed to fill and empty completely. Applicable NFPA standards such as NFPA 1901, *Standard for Automotive Fire Apparatus*, contain data on adequate plumbing.

Table C.6 Emptying Time for 1600 Gal (6060 L) Mobile Water Supply by Gravity Flow

Outlet Size		
in.	mm	Discharge Time (min)
2½	65	20
4½	115	7
6	150	5
10	250	1⅔
12	300	1½

C.6.1 Fill Line Couplings. Often, time wasted at mobile water supply fill locations is due to difficulties in connecting and disconnecting the threaded couplings on the hose between the fill pumper and the water tank fill connection on the mobile water supply apparatus. If such difficulties exist, considerable time can be saved by using either a quarter-turn coupling (or some type of flexible hose with a quick disconnect), a specially designed large-diameter fill pipe, or a rapid-fill device that drops into the fill opening at the top of the tank, thus providing quick breakaway from the fill supply.

C.7 Weight Distribution. Weight distribution is all-important in the handling of a heavy piece of fire apparatus and should be properly designed into the unit and then verified by weighing each axle. Even the slightest change in the load carried or in the distribution of the load can cause the design limits of the truck to be exceeded and turn a safe vehicle into an unsafe vehicle.

C.8 Turning Radius and Wheelbase. An important consideration in mobile water supply shuttle operations is the area

Copyright National Fire Protection Association
Provided by IHS under license with NFPA
No reproduction or networking permitted without license from IHS
Not for Resale

available for turning. Because the mobile water supply apparatus might be called on to reverse direction or to maneuver for position at the water source or the fire site, multiple single-axle straight chassis mobile water supply apparatus, each with a 12 in. (300 mm) gravity dump or a 6 in. (150 mm) jet dump, might actually move more water to the fire location than longer wheelbase tractor trailers and dual wheel, tandem-axle, mobile water supply apparatus.

C.9 Modification of Nonwater Tankers for Use as Mobile Water Supply Apparatus. Special care should be used in modifying a tanker built for a purpose other than for mobile water supply use, such as the prevalent practice of adapting an oil tanker for use as a mobile water supply apparatus. The majority of oil or gasoline tankers are constructed to carry a volatile liquid whose specific gravity is less than that of water. When these tankers are utilized as mobile water supply apparatus, the weight will exceed the manufacturer's permissible gross vehicle weight limits. For this reason, it might be preferable to reduce the tank's size to avoid undesirable effects on weight distribution. In doing so, special attention should be paid to any alteration that affects the vehicle's center of gravity as a change that could affect the vehicle's stability when it turns corners.

Special attention should be paid to the baffling of such modified mobile water supply apparatus, and the vehicle should be rejected if it does not meet the demands of cornering, braking, and acceleration required by the fire service.

Other special factors to be considered in modifying nonwater tankers are as follows:

(1) A stainless-steel milk tanker might be made out of very light-gauge metal with no baffling and might be difficult to baffle crosswise and lengthwise.
(2) The steel used in gasoline tankers will corrode extremely fast due to the uncoated interior of such tanks. In addition, the steel used is not of the copper-bearing or stainless type used in most fire apparatus tanks.
(3) Aluminum fuel oil tanks have been found to be subject to corrosion from chlorinated water and corrosive rural water supplies. They can have a life expectancy less than that of steel if not properly coated and protected.
(4) An inherent danger in modifying gasoline tankers is the possibility of an explosion. All gasoline tanks should be thoroughly steam cleaned before modifications requiring welding are started.
(5) Gasoline and milk tankers are usually designed to be filled each morning for distribution of the product during the day under normal traffic conditions, unlike fire equipment, which is designed for use under emergency conditions. It is not necessary for an oil tanker or milk tanker to stand in the station fully loaded day after day. Table C.9 shows the difference in weight of different fluids.

Table C.9 Weights of Various Fluids

	Weights	
Fluids	**lb/gal**	**kg/L**
Milk	8.5	1.02
Water	8.3	0.99
Gasoline	6.2	0.74

C.10 Driver Training. An important consideration frequently overlooked by the rural fire department is that of driver training. Few people are trained to drive a tractor-trailer combination under emergency conditions, and the fire department planning to use such a vehicle should provide specific training for drivers of this type of apparatus. Even a two- or three-axle vehicle used as a mobile water supply apparatus will probably have driving characteristics very different from other apparatus, and driver training is extremely important. Individual state operator licensing requirements should be met. NFPA 1002, *Standard for Fire Apparatus Driver/Operator Professional Qualifications*, and NFPA 1451, *Standard for a Fire Service Vehicle Operations Training Program*, should both be used when developing programs to train and validate drivers of emergency fire apparatus.

C.11 Calculating Water-Carrying Potential. The following are two primary factors to be considered in the development of tank water supplies:

(1) The amount of water carried on initial responding units
(2) The amount of water that can be continuously delivered after initial response

A number of fire departments have developed water-hauling operations where they have a maximum continuous flow capability (a sustained fire flow) of 1000 gpm to 2000 gpm (3800 L/min to 7600 L/min) at the fire scene. Such continuous flow requires several mobile water supply apparatus to haul such large quantities of water, with a developed water source near the fire scene. To improve the safety factor by reducing congestion on the highways, the departments often send the mobile water supply apparatus to the water source by one road and use another route for the mobile water supply apparatus to return to the fire scene. Therefore, the amount of time for the apparatus to travel from the fire to the water source (T_1) might be different from the travel time back to the fire (T_2). The reduction of congestion on the highway provides for a safer operation and can increase the actual amount of water hauled.

The maximum continuous flow capability at the fire scene is calculated as follows:

$$Q = \frac{V}{A + T_1 + T_2 + B} \times k$$

where:

Q = maximum continuous flow capability [gpm (L/min)]
V = tank volume of the mobile water supply apparatus in gal (L)
A = time (min) for the mobile water supply apparatus to drive 200 ft (61 m), dump water into a drop tank, and return 200 ft (61 m) to starting point
T_1 = time (min) for the mobile water supply apparatus to travel from fire to water source
T_2 = time (min) for the same mobile water supply apparatus to travel from water source back to fire
B = time (min) for the mobile water supply apparatus to drive 200 ft (61 m), fill mobile water supply at water source, and return 200 ft (61 m) to starting point
k = 1.0 for vacuum/pressure mobile water supply apparatus; 0.9 for all other mobile water supply apparatus due to spillage, underfilling, and incomplete unloading

Copyright National Fire Protection Association
Provided by IHS under license with NFPA
No reproduction or networking permitted without license from IHS
Not for Resale

The dumping time *(A)* and filling time *(B)* for the formula should be determined by drill and by close study of water sources. Equipment does not have to be operated under emergency conditions to obtain travel time *(T)*, which is calculated using the following equation:

$$T = 0.65 + XD$$

where:
T = time (min) of average one-way trip travel
X = average speed factor = 60/average speed *[see Table C.11(a)]*.
D = one-way distance (miles)

The factor 0.65 represents an acceleration/deceleration constant developed by the Rand Corporation.

Where an apparatus is equipped with an adequate engine, chassis, baffling, and brakes, a safe constant speed of 35 mph (56 km/hr) can generally be maintained on level terrain, in light traffic, and on an adequate roadway. Where conditions will not permit this speed, the average safe speed should be reduced.

Using an average safe constant speed of 35 mph (56 km/hr), the X factor is calculated as follows:

$$X = \frac{60}{\text{average speed}} = \frac{60}{35 \text{ mph}} = 1.7$$

Precalculated values of X using various speeds in miles per hour and kilometers per hour are shown in Table C.11(a). When the distance is inserted into the formula for travel time ($T = 0.65 + XD$), the results are as indicated in Table C.11(b).

Table C.11(a) Precalculated Values of *X*

Speed (mph)	*X*	Speed (km/hr)	*X*
15	4.0	25	2.4
20	3.0	30	2.0
25	2.4	40	1.5
30	2.0	50	1.2
35	1.7	60	1.0

The formulas in this annex make it possible to determine water availability at any point in an area.

As an example of how to calculate the water available from a supply where the water has to be transported to the fire scene, consider the following situation:

(1) The water tank capacity (V) is 1500 gal (5678 L).
(2) The time (A) to fill the mobile water supply apparatus with water is 3.0 minutes.
(3) The time (B) to dump the water into a portable tank is 4.0 minutes.
(4) The distance (D_1) from the fire to the water source is 2.1 mi (3.4 km).
(5) The distance (D_2) from the water source is 1.8 mi (2.9 km), as the mobile water supply apparatus returns by a different road.

First, solve for T_1, the time for the mobile water supply apparatus to travel from the fire to the water source, and then solve for T_2, the time for the mobile water supply apparatus to travel from the water source back to the fire.

Table C.11(b) Time–Distance Table Using an Average Speed of 35 mph (56 km/hr)

Distance		Time	Distance		Time
mi	km	(min)	mi	km	(min)
0.0	0.00	0.00	4.50	7.24	8.30
0.1	0.16	0.82	4.75	7.64	8.72
0.2	0.32	0.99	5.00	8.05	9.15
0.3	0.48	1.16	5.25	8.45	9.57
0.4	0.64	1.33	5.50	8.85	10.00
0.5	0.80	1.50	5.75	9.25	10.42
0.6	0.97	1.67	6.00	9.65	10.85
0.7	1.13	1.84	6.25	10.06	11.27
0.8	1.29	2.01	6.50	10.46	11.70
0.9	1.45	2.18	6.75	10.86	12.11
1.0	1.61	2.35	7.00	11.26	12.55
1.25	2.01	2.78	7.25	11.66	12.97
1.50	2.41	3.20	7.50	12.07	13.40
1.75	2.82	3.62	7.75	12.47	13.82
2.00	3.22	4.05	8.00	12.87	14.25
2.25	3.62	4.47	8.25	13.27	14.67
2.50	4.02	4.90	8.50	13.68	15.10
2.75	4.42	5.31	8.75	14.08	15.52
3.00	4.83	5.75	9.00	14.48	15.95
3.25	5.23	6.17	9.25	14.88	16.37
3.50	5.63	6.60	9.50	15.29	16.80
3.75	6.03	7.02	9.75	15.69	17.22
4.00	6.44	7.45	10.0	16.09	17.65
4.25	6.84	7.87			

Due to good weather and road conditions, the average mobile water supply apparatus speed traveling from the fire to the water source is 35 mph (56 km/hr).

Use the travel time formula as follows:

$$T = 0.65 + XD$$

where:
X = 1.7
D_1 = 2.1

and where at an average speed of 35 mph (56 km/hr):

$T_1 = 0.65 + 1.7D_1$
$T_1 = 0.65 + 1.7 \times 2.1$
$T_1 = 0.65 + 3.57$
$T_1 = 4.22$

At an average speed of 35 mph (56 km/hr), a mobile water supply traveling 2.1 mi (3.4 km) will take 4.22 minutes. Due to traffic lights, the average mobile water supply apparatus speed between the water source and the fire is 30 mph (48 km/hr).

Use the travel time formula as follows:

$$T = 0.65 + XD$$

where:
X = 2.0
D_2 = 1.8

and where at a constant speed of 30 mph (48 km/hr):

$T_2 = 0.65 + 2.0D_2$
$T_2 = 0.65 + 2.0 \times 1.8$
$T_2 = 0.65 + 3.60$
$T_2 = 4.25$

Copyright National Fire Protection Association
Provided by IHS under license with NFPA
No reproduction or networking permitted without license from IHS
Not for Resale

Use the following formula for calculating the maximum continuous flow capability:

$$Q = \frac{V}{A + T_1 + T_2 + B} \times k$$

where:
Q = maximum continuous flow capability (gpm)
V = 1500
A = 3.0
T_1 = 4.22
T_2 = 4.25
B = 4.0
k = 0.9

Therefore,

$$Q = \frac{1500}{3.0 + 4.22 + 4.25 + 4.0} \times 0.9$$

$$Q = \frac{1500}{15.47} \times 0.9$$

$$Q = 97 \times 0.9 = 87 \text{ gpm } (330 \text{ L/min})$$

The maximum continuous flow capacity available from this 1500 gal (5700 L) mobile water supply is 87 gpm (330 L/ min).

To increase the maximum continuous flow capability of a mobile water supply, any of the following changes can be made:

(1) Increase the capacity of the mobile water supply.
(2) Reduce the fill time *(see Figure C.11).*
(3) Develop and provide additional fill points, thus reducing travel time.
(4) Reduce the dump time.
(5) Use additional mobile water supply apparatus.

The number and size of mobile water supply apparatus available to the department is of importance in calculating the probable mobile water supply volume that will be available at various fire locations. Equally important in increasing the maximum continuous flow capability of a mobile water supply is the reduction of the distance between the source of water and the fire. The distance can be reduced by increasing the number of water supply points, the number of drafting points at a given supply, or both.

C.12 Mobile Water Supply Apparatus Filling and Off-Loading. During mobile water supply operations, filling and off-loading water delivery rates directly affect the fire flow capabilities established for the fire scene. Local needs usually determine mobile water supply configurations and procedures. A wide variety of off-loading and filling systems are currently in use. Some departments prefer to pump-off their water into portable tanks, while others off-load mobile water supply apparatus using gravity dump valves, jet-assisted dump devices, or air pressurization systems. Some departments still utilize a nursing operation by connecting water supply vehicles via hard suction or supply line directly to the fire-fighting apparatus at the scene. The use of gravity dump valves, jet-assisted dump devices, or positive displacement air-pressurization (blower)/ vacuum pump systems, in concert with large portable dump tanks at the fire scene has provided additional operational flexibility and has greatly reduced the overall turnaround time associated with mobile water supply apparatus off-loading.



FIGURE C.11 Example of a Quick Connect Coupling That Can Help to Reduce the Fill Time.

Every fire department needs to evaluate and decide which system for filling and off-loading apparatus provides the optimal advantages in terms of water delivery rate effectiveness, efficiency, and overall compatibility with other water delivery segments. During a comprehensive water delivery evaluation, many factors must be considered. Travel distances, fill and off-loading locations, and topography greatly affect the turnaround time periods associated with transporting water. *(See Section C.11.)* Usually, the greatest amount of time can be saved during the filling and off-loading segments of a water shuttle operation.

As with other segments of fireground operations, strategic preplanning is vital to mobile water supply evolutions. Preplanning and practice reduce unnecessary actions and minimize unsafe practices. For example, a properly established dump site should eliminate or substantially reduce the need to back up vehicles. Backing up of vehicles has caused a significant number of personal injuries associated with emergency vehicle operations and also requires extra time. The use of flexible discharge tubes or side dumps during off-loading, in conjunction with properly set up dump sites, can reduce or eliminate the necessity of backing up the vehicles.

C.12.1 Mobile Water Supply Apparatus Equipped with Large Gravity Dumps. A growing trend among fire departments using mobile water supply apparatus is to increase the size of the gravity discharge dumps to reduce the time necessary to empty the water tank. Gravity dump arrangements with discharge valves of 10 in. (250 mm), 12 in. (300 mm), or larger are often used. Dump valve discharge rates will decrease as the depth of the water in a given tank decreases. Adequate air intakes and tank baffle cuts should be provided to avoid possible tank damage and inefficient operations. To check the efficiency of a dump system, weight tests should be conducted to determine discharge rates. *(See Section C.13.)*

C.12.2 Mobile Water Supplies Equipped with Jet-Assisted Dumps. A water jet is a pressurized water stream used to increase the velocity of a larger volume of water that is flowing by gravity through a given size dump valve. The jet principle used to expel water from mobile water supply apparatus has also been effectively applied to several other devices that can transfer water between portable dump tanks, fill mobile water supply apparatus from static water sources, and reduce suction losses at draft. Water jets properly installed in the discharge

Copyright National Fire Protection Association
Provided by IHS under license with NFPA
No reproduction or networking permitted without license from IHS
Not for Resale

piping of a mobile water supply apparatus can more than double its off-loading efficiency. Effective jet-assisted arrangements have exceeded a 1000 gpm (3800 L/min) discharge rate when using 6 in. (150 mm) discharge piping and valves. Pumps supplying such jet arrangements should be capable of delivering a minimum of 250 gpm (950 L/min) at a gauge pressure of 150 psi (1035 kPa). Some departments have obtained good results with pumps that deliver flows at a gauge pressure of less than 150 psi (1035 kPa) where larger discharge openings are provided. The size and design of the nozzle and the diameter and length of the dump valve piping directly affect unit efficiency.

C.12.2.1 Traditional In-Line Jet-Assisted Arrangement. Figure C.12.2.1(a) illustrates how the traditional jet is installed. A smooth-tipped nozzle is usually supplied by a pump capable of delivering at least 250 gpm (950 L/min) at a gauge pressure of 150 psi (1035 kPa). Nozzle tips range in size from ¾ in. to 1¼ in. (19 mm to 32 mm). The diameter of the tip will be determined by the capacity of the pump being used and the diameter of the discharge piping and dump valve.

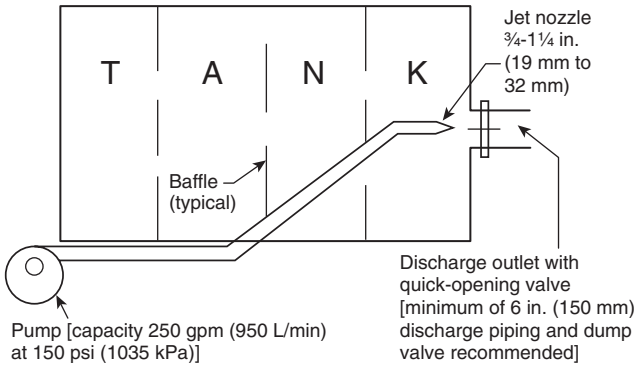

FIGURE C.12.2.1(a) Traditional Internal Jet-Assisted Dump.

Before a jet-assisted dump is installed, questions including, but not limited to, the following should be answered:

(1) In what location will the dump prove to be most useful, the side or the back?
(2) Will the fixed piping need to be 1½ in. (38 mm) in diameter or 2 in. (51 mm) in diameter?
(3) What is the preferable location for the jet, in-line or at the rear of the tank?

In the interest of site versatility, many departments are utilizing lightweight flexible discharge tubes equipped with quick-lock or quarter-turn couplings. Such tubing arrangements allow rapid discharge of water to either side of the vehicle and reduce the need for hazardous backing at the dump site.

The rate of discharge will be governed by the size of the dump valve and piping, which can range from 4 in. to 12 in. (100 mm to 300 mm). Normally, a 6 in. or 8 in. (150 mm or 200 mm) diameter dump configuration permits adequate flow capacities where water jet systems are employed. Again, it is stressed that adequate air exchange and water flow passages should be provided for a jet-assisted dump arrangement to function properly. Tanks can collapse where air exchange is restricted. Lack of adequate gravity water flow to the jet area will also adversely affect the discharge efficiency of the water-hauling unit.

Although some authorities recommend that the nozzle of the in-line jet be up to 6 in. (150 mm) from the center of the discharge opening, other effective designs have included placement of the nozzle inside the discharge piping. Figure C.12.2.1(b) details how the traditional jet arrangement can be externally added to an existing dump valve. A short length of 1½ in. (38 mm) hose is attached to the female coupling on the jet device. The length of the added dump piping can range from 2 ft to 4 ft (0.6 m to 1.2 m), depending on whether a flexible tube is utilized during the dump process.

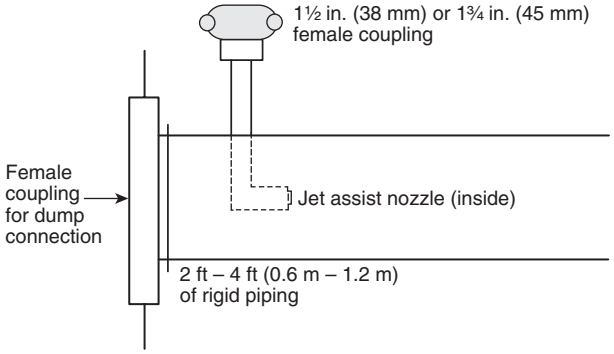

FIGURE C.12.2.1(b) Traditional External Jet-Assisted Dump.

To properly operate, a jet should be able to produce a discharge gauge pressure at the nozzle between 50 psi and 150 psi (345 kPa and 1035 kPa). Higher pressures normally increase operational effectiveness. The diameter of the jet selected should be appropriate for the capabilities of the pump being utilized. Also important is the size of the piping and valves that make up the jet-assisted dump system. The major advantage of external jets is reduced maintenance. Disadvantages include the need for adequate air exchange during water flow, and the additional time for the initial setup in order to attach hose and affix appliances.

C.12.2.2 Peripheral Jet-Assist Arrangement. The peripheral application of jet-assist nozzles has proved highly effective. This arrangement utilizes two or more jets installed in the sides of the discharge piping just outside the quick-dump valve. In addition to the reported discharge advantages of peripheral jet streams, the externally fed system is easier to plumb and has fewer maintenance problems. The jets, installed 25 degrees to 30 degrees from the piping wall, contact more surface area of the discharging water, thereby increasing water discharge efficiency. Because the water is drawn through the dump valve, less turbulence is created, and the eddy effect often present with traditional in-line jets is overcome. Nozzles made of welding reducer pipe fittings work very effectively as jets. Flow rates of 2000 gpm (7600 L/min) have been obtained using a 300 gpm (1136 L/min) pump to supply two ¾ in. (19 mm) nozzles in a 6 in. (150 mm) dump valve configuration. Figure C.12.2.2(a) and Figure C.12.2.2(b) represent two views of a typical installation.

C.12.2.3 Other Jet-Assist Devices. Innovative fire organizations have put siphons and jet-related devices to good use. Some siphons use only water-level differential to transfer water from one portable tank to another. Normally constructed of PVC pipe, such siphons are placed between portable tanks to equalize water levels. Transfer is initiated by filling the U-shaped tubing with water, placing the caps on

Copyright National Fire Protection Association
Provided by IHS under license with NFPA
No reproduction or networking permitted without license from IHS
Not for Resale

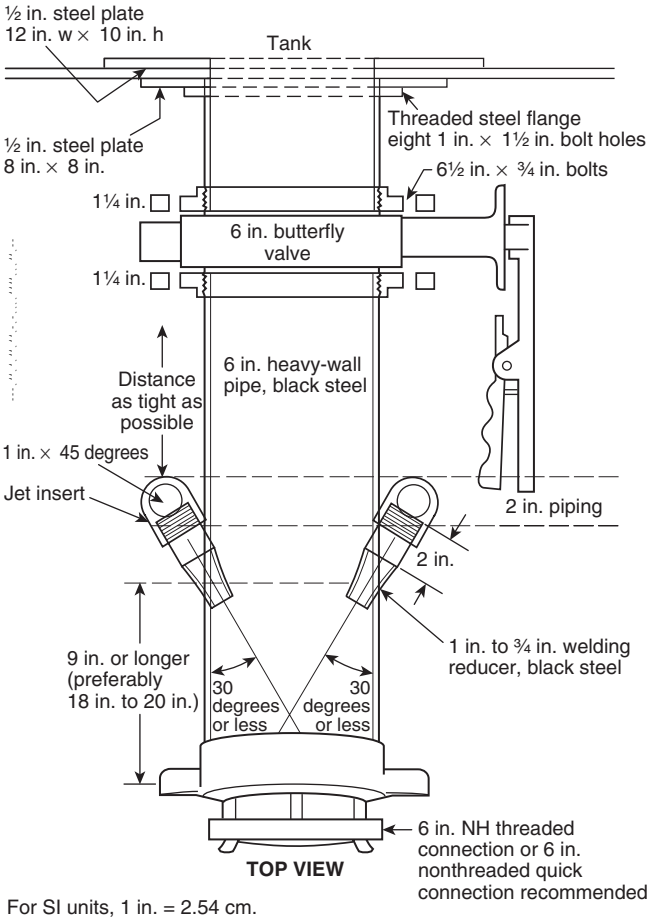

For SI units, 1 in. = 2.54 cm.

FIGURE C.12.2.2(a) Peripheral Jet-Assist Installation (Top View).

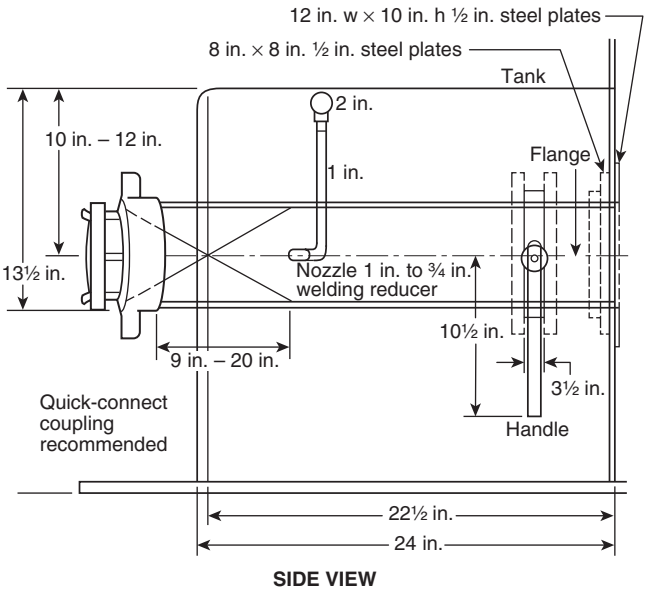

For SI units, 1 in. = 2.54 cm.

FIGURE C.12.2.2(b) Peripheral Jet-Assist Installation (Side View).

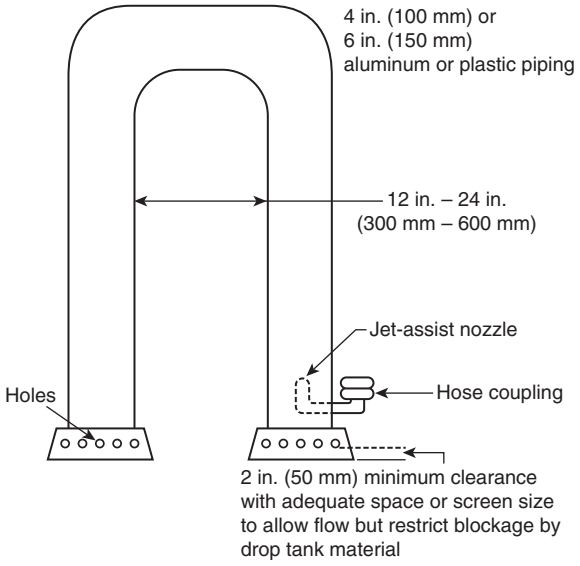

FIGURE C.12.2.3(a) Jet-Assist Transfer Siphon.

the tubing until it is put in place, and then removing the caps to allow water flow. Such an arrangement, though useful, has often proved too slow for the type of transfer operations required. A modification of the siphon transfer piping using a jet was developed and has proved useful to many departments. Although 4 in. (100 mm) PVC and aluminum piping have been used for such devices, 6 in. (150 mm) units usually are more practical. Using a ½ in. (13 mm) jet-assist nozzle supplied by a 1½ in. (38 mm) hose makes possible transfer flows of 500 gpm (1900 L/min). *[See Figure C.12.2.3(a).]* Some departments have built a metal sleeve with a jet-assist nozzle that can be merely added to a length of suction hose. *[See Figure C.12.2.3(b).]*

Siphons/eductors that use the jet principle are commercially available. These devices, also called water eductors, can provide access to static water supply sources (lakes, ponds, streams, and swimming pools) up to 250 ft (76 m) away from a pump. They also increase the water supply from the static source to the fire department pump.

A discharge hose referred to as the motive supply line is run from the pump discharge to feed the siphon/eductor while a larger-diameter hose runs from the siphon/eductor to a valved pump intake. When the siphon/eductor is set up, the motive hose line is charged with water from the water tank on the fire apparatus or other source. As the water from the motive hose passes through the eductor, water is drawn from the static water source as a result of the suction force created by the flow through the eductor's venturi. Once the air is bled from the supply line back to the pump, the bleeder is closed and the valve on the pump intake is opened. At this point, the water supply has been established.

The devices are available in a variety of sizes up to 2½ in. (65 mm) motive hose and a 5 in. or 6 in. (125 mm or 150 mm) supply hose. One drawback to these systems is that 25 percent to 30 percent of the water delivered by the supply hose must be pumped back into the motive hose.

Copyright National Fire Protection Association
Provided by IHS under license with NFPA
No reproduction or networking permitted without license from IHS
Not for Resale

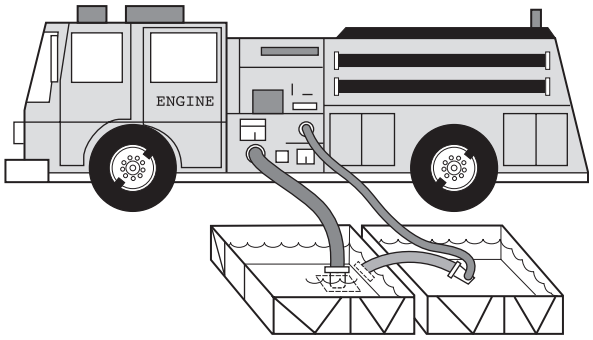

FIGURE C.12.2.3(b) Modified Hard Suction Jet Siphon.

In-line jets have also been developed to reduce suction losses during drafting operations. In-line and peripheral jets supplied by 1½ in., 1¾ in., or 2½ in. (38 mm, 44 mm, or 65 mm) hose lines can increase the output capacity of a centrifugal pump at draft up to 40 percent. The jets are placed at the intake and at every 10 ft (3.1 m) of suction in use. The design characteristics of strainers used during such application should permit adequate water flow capacity.

C.12.3 Mobile Water Supply Apparatus Equipped for Air Pressurization/Vacuum Operations. Fire apparatus are now available with a pressure/vacuum system (sometimes referred to as a blower/vacuum system) to fill and empty the water tank. When filling the water tank, the system operates by rapidly extracting air from the water tank, allowing water to be drawn into the tank from the water source through suction hose. To empty the tank, the process is reversed and air pressure is exerted on the water in the tank, forcing the water out the discharge outlet(s). The intake and discharge connections to the tank can be the same connection.

The system consists of a large positive-displacement rotary vane pump that can either pressurize the water tank with air to pressures between 5 psi and 12 psi (34 kPa and 83 kPa) or develop a negative pressure in the tank up to 26 in. Hg (88 kPa) vacuum. The water tank must be "air tight," so the vacuum is maintained while the entire capacity [generally between 2000 gal to 4000 gal (7600 L to 15,200 L)] is filled with water. Water tanks used with pressurization/vacuum systems are usually round (oval) with dished heads and are specifically designed to withstand the air pressure and vacuum force placed upon them. The water tank must be properly baffled with "swash plates" and have an adequate pressure relief system.

The type of vacuum pump used for pressure/vacuum mobile water supply apparatus usually has the capability of "reversing itself," so the same pump that creates the vacuum can also be used to pressurize the tank for rapid discharge of water during off-loading. Mobile water supply apparatus with pressure/vacuum systems need to meet all applicable federal regulations and NFPA standards.

To provide handline capability and increased transfer flexibility, fire departments often install a fire pump with a 500 gpm at 150 psi (1900 L/min at 1035 kPa) or larger capacity or a large portable pump capable of supplying handline volumes and pressures on the mobile water supply apparatus.

Manufacturers indicate that pressure/vacuum-equipped units provide the same capabilities as other mobile water supply apparatus, with or without a fire pump or with or without jet-style dump valves. Apparatus equipped with pressure/vacuum systems can utilize long runs of suction hose to remote water sources and overcome a draft height (vertical lift distance) greater than apparatus with a standard fire pump and primer arrangement. Benefits that manufacturers claim are associated with the use of pressure/vacuum technology include the following:

(1) Water tanks completely fill at intake flow rates up to 2000 gpm (7600 L/min).
(2) The unit lifts water to heights of 28 ft to 30 ft (8.5 m to 9 m) and maintains effective draft capability for extended distances from the fill site. It can also be effectively filled from a hydrant or other positive pressure source.
(3) There is no water spillage during transport.
(4) The same inlets/discharges located on the right, left, and rear provide both fill and dump options.
(5) Pressurizing the water tank permits rapid off-loading using one outlet. The pressurized tank facilitates water discharge at a delivery rate in excess of normal dump valve arrangements that rely on standard atmospheric pressure and some jet-assist dump devices.

C.13 Testing Dump Valve Capacity. Departments using large gravity dump valves or jet-assisted dump valve arrangements need to determine the flow rate at which they can dump each mobile water supply apparatus in use. Generally accepted procedures for determining flow capacities have been developed and should be accomplished as follows:

(1) Determine the useful water-carrying capability of the apparatus as follows:
   (a) Fill the water tank and weigh the mobile water supply apparatus. This is the full weight (*FW*).
   (b) Empty the water tank using the dump valve using only gravity and reweigh the apparatus. This is the empty weight (*EW*).
   (c) Determine the water carrying capacity (*Q*) of the apparatus as follows:

$$Q \text{ in gallons} = \frac{FW(\text{lb}) - EW(\text{lb})}{8.33}$$

$$Q \text{ in liters} = FW(\text{kg}) - EW(\text{kg})$$

   where:
   FW = weight of apparatus with tank full
   EW = weight of apparatus with tank empty
   Q = water-carrying capacity of apparatus

(2) Determine the dump rate through the dump valve when only gravity is used as follows:
   (a) Fill the water tank.
   (b) Off-load the water for 1 minute through the dump valve using gravity only.
   (c) Weigh the apparatus to determine the gravity-only dumped weight (*GDW*).
   (d) Determine the dump rate when only gravity is used (*GDR*) as follows:

$$GDR_{\text{gal/min}} = \frac{FW(\text{lb}) - GDW(\text{lb})}{8.33}$$

$$GDR_{\text{L/min}} = FW(\text{kg}) - GDW(\text{kg})$$

   where:
   GDR = dump rate when only gravity is used
   FW = weight of apparatus with tank full
   GDW = weight of apparatus after 1 minute of dumping water using gravity only

Copyright National Fire Protection Association
Provided by IHS under license with NFPA
No reproduction or networking permitted without license from IHS
Not for Resale

(3) If the tank is equipped with a jet-assist dump, determine the dump rate through the dump valve when the jet assist is used as follows:
   (a) Fill the water tank.
   (b) Off-load the water for 1 minute through the dump valve with the jet assist being used.
   (c) Weigh the apparatus to determine the jet assist dumped weight (*JDW*).
   (d) Determine the dump rate when a jet assist is used (*JDR*) as follows:

$$JDR_{gal/min} = \frac{FW(lb) - JDW(lb)}{8.33}$$

$$JDR_{L/min} = FW(kg) - JDW(kg)$$

where:
JDR = dump rate when jet dump assist is used
FW = weight of apparatus with tank full
JDW = weight of apparatus after 1 minute of dumping using jet dump assist

(4) If the apparatus is equipped with a pump, determine the dump rate when pumping the water off as follows:
   (a) Fill the water tank.
   (b) Off-load the water for 1 minute through the tank to pump plumbing using the pump on the apparatus and one or more 2½ in. (65 mm) discharges.
   (c) Weigh the apparatus to determine the pumping dumped weight (*PDW*).
   (d) Determine the dump rate when a pump is used (*PDR*) as follows:

$$PDR_{gal/min} = \frac{FW(lb) - PDW(lb)}{8.33}$$

$$PDR_{L/min} = FW(kg) - PDW(kg)$$

where:
PDR = dump rate when pump is used
FW = weight of apparatus with tank full
PDW = weight of apparatus after 1 minute of pumping water from the tank

Initially it is important to know how much water the tank is really capable of delivering. Poor tank discharge arrangements and misunderstanding of the tank's capacity often result in a tank that cannot carry as much water as thought. An effective jet-assisted dump arrangement should be capable of off-loading at least twice the volume that would be expected when off-loading by gravity for a given period of time and should exceed the volume off-loaded using the pump only. Whether using gravity dumps or jet dump arrangements, turnaround drop times and ease of operations should be the primary considerations.

C.14 Portable Drop Tanks. Generally, the three types of portable drop tanks are the following:

(1) Self-supporting tank
(2) Fold-out frame tank
(3) High-sided fold-out tank for helicopter bucket-lift mobile water supply service

The self-supporting tank is built with the sides reinforced to support the water inside the tank. Tanks are available with an inlet or outlet, or both, built into the side of the tank. Tanks are available in a wide range of capacities with 1500 gal to 2000 gal (5700 L to 7600 L) tanks being those used most often.

Each mobile water supply apparatus should carry a portable drop tank that has a 40 percent greater capacity than the water tank of that apparatus. The strainer on suction hose used when drafting from a portable tank should be designed to minimize whirlpooling and allow the fire department to draft to a depth of 1 in. to 2 in. (25 mm to 51 mm) from the bottom.

C.15 Use of Portable Drop Tanks and Mobile Water Supply Vehicles. The development of the portable drop tank, or portable folding tank, and the jet-assisted dump, or large gravity dump, to quickly discharge the water from the mobile water supply apparatus into that tank has enabled many rural fire departments to utilize isolated water supplies and, for the first time, to provide sufficient water for effective fire fighting. A brief summary of how the system is being employed by some departments is described in this section.

When an alarm of fire is received, equipment is dispatched on a preplanned basis determined by such factors as fire flow needs, hazards involved, water supply available, and so forth *(see Chapter 4)*. A minimum of one mobile water supply apparatus and one pumper respond to the fire, and the pumper begins the fire attack with water from its booster tank.

The first responding mobile water supply apparatus can act as a nurse unit supplying water directly to the pumper or can set up a portable drop tank in a position where the pumper can draft from it and begin discharging its load of water into the drop tank. With the use of a jet-assist discharging through a 5 in. or 6 in. (125 mm or 150 mm) discharge pipe or a large 12 in. (300 mm) gravity dump valve, the water in the mobile water supply apparatus can be transferred to the portable drop tank at a rate of approximately 1000 gpm (3800 L/min). A short piece of aluminum pipe with an "L" on one end provides the flexibility to discharge into the drop tank with the mobile water supply apparatus backed up to the drop tank or with the drop tank located on either side of the apparatus. (*See Figure C.15.*)



FIGURE C.15 Portable Drop Tank with "L"-Shaped Aluminum Irrigation Discharge Pipe.

As soon as the mobile water supply apparatus has emptied its water tank, it immediately heads to the water supply. If the water supply is a static source, another fire department pumping unit has arrived at that location and has prepared to pump

Copyright National Fire Protection Association
Provided by IHS under license with NFPA
No reproduction or networking permitted without license from IHS
Not for Resale

from that source to fill the mobile water supply apparatus. When the empty mobile water supply apparatus arrives at the water supply, its water tank is refilled and the mobile water supply apparatus returns to the fire site, discharges its water, and the cycle is repeated.

It can be more efficient to fill one mobile water supply apparatus at a time rather than to fill two or more mobile water supply apparatus at a slower rate. Also, if all mobile water supply apparatus being used at a fire have approximately the same capacity, they will not stack up at the source of the supply or at the fire while waiting for a large mobile water supply apparatus to be filled at the source or to discharge its water at the fire.

Although preplanned, each step of this hauling operation is under the direction of the WSO, and local conditions can dictate variations in this basic system.

As additional mobile water supply apparatus arrive at the fire site and dump their water, they fall into the water-hauling cycle. It might be necessary for the WSO to open up additional water supply points with additional pumpers. Portable pumps can sometimes be used in this operation if the additional supply is not readily accessible; however, refill time could be greatly increased. The WSO at the fire site should be in radio contact with the officer in charge of each water supply or suction point. The WSO will also advise the drivers as to which route to take to and from the fire site. Wherever possible, an alternate route should be selected for returning vehicles so that emergency vehicles will not be meeting on sharp turns or narrow country roads.

It is possible that a local fire department will be unable to meet the water supply demands at certain occupancies that require a large volume of water with its initial alarm response. Automatic aid pumpers and mobile water supply apparatus can be set up to respond automatically on the first alarm, thereby conserving valuable time and delivering the water needed as calculated in Chapter 4.

Annex D Large-Diameter Hose

This annex is not a part of the requirements of this NFPA document but is included for informational purposes only.

D.1 General. The use of large-diameter hose has major significance in the field of rural water supplies. This hose is viewed as an aboveground water main from a water source to the fire scene. Where delivery rates need to exceed 500 gpm (1900 L/min) and water is being moved long distances, large-diameter hose provide a most efficient means of minimizing friction losses and developing the full potential of both the water supply and the pumping capacity. NFPA defines large-diameter hose as hose with an inside diameter of 3½ in. (89 mm) or larger.

D.2 Characteristics of Large-Diameter Hose. Large-diameter hose is available in either single-jacketed or double-jacketed construction, generally in the following sizes:

(1) 3½ in. (89 mm)
(2) 4 in. (100 mm)
(3) 5 in. (125 mm)
(4) 6 in. (150 mm)

Large-diameter hose is available as either supply hose or attack hose. Supply hose will have a design service test pressure of 200 psi (1380 kPa) for an expected normal highest operating pressure of 185 psi (1280 kPa). Some older large-diameter hose might only have been rated for a service test pressure of 150 psi (1035 kPa). Attack hose will have a design service test pressure of at least 300 psi (2070 kPa). At that service test pressure, the expected normal highest operating pressure would be 275 psi (1900 kPa).

The lower friction loss characteristics of such hose for a given quantity of water increases the usable distance between the water source and the fire. The department unable to use water sources more than 1000 ft (305 m) from a potential fire site using 2½ in. (65 mm) hose could flow approximately twice as much water 3000 ft (914 m) or more through 4 in. (100 mm) hose with the same friction loss.

The basic reason large-diameter hose moves water more effectively is its larger size. The relationship can be explained by studying the carrying capacities and friction loss factors shown in Table D.2(a) and Table D.2(b).

Table D.2(a) Relative Water Capacity of Different Size Fire Hose Per Unit Length

Nominal Diameter of Hose (in.)	Nominal Diameter of Hose (in.)						
	2½	3	3½	4	4½	5	6
2½	1.00	0.617	0.413	0.29	0.213	0.161	0.1
3	1.62	1.0	0.667	0.469	0.345	0.261	0.162
3½	2.42	1.5	1.0	0.704	0.515	0.391	0.243
4	3.44	2.13	1.42	1.0	0.735	0.556	0.345
4½	4.69	2.90	1.94	1.36	1.0	0.758	0.469
5	6.20	3.83	2.56	1.8	1.32	1.0	0.619
6	10.00	6.19	4.12	2.9	2.13	1.61	1.0

For SI units, 1 in. = 25.4 mm; 1 gpm = 3.785 L/min; 1 psi = 0.0689 bar.
Note: The values in the table are based on the Hazen–Williams equation.

Table D.2(b) Approximate Friction Losses in Fire Hose (psi/100 ft)

Flow (gpm)	Nominal Diameter of Hose (in.)					
	2½	3	3½	4	5	6
250	13	5	2	1	—	—
500	50	20	8.5	5	2	1
750	—	45	19	11	5	3
1000	—	80	34	20	8	5
1500	—	—	77	45	18	11
2000	—	—	—	80	32	20

For SI units, 1 in. = 25.4 mm; 1 gpm = 3.785 L/min; 1 psi = 0.0689 bar.

D.2.1 Carrying Capacity of Large-Diameter Hose. Large-diameter hose is superior to traditional standard fire hose in its ability to carry more water per hose line. Table D.2(a) provides a comparison of the carrying capacity between different diameter hose lines.

To use Table D.2(a), find the desired hose diameter in the left-hand column and read horizontally to find the corresponding hose size equivalent. For example, the table shows that 5 in. (125 mm) diameter hose has 6.2 times the carrying capacity of 2½ in. (65 mm) hose, 3.83 times the carrying capacity of 3 in. (76 mm) hose, 2.56 times the carrying capacity of 3½ in. (89 mm) hose, and so on. In other words, it would

Copyright National Fire Protection Association
Provided by IHS under license with NFPA
No reproduction or networking permitted without license from IHS
Not for Resale

require over six lines of 2½ in. (65 mm) hose to equal the capacity of only one line of 5 in. (125 mm) hose.

Large-diameter hose also has less friction loss per flow rate than smaller diameter hose. Table D.2(b) shows the relative friction loss of 2½ in. (65 mm) to 6 in. (152 mm) diameter hose for the various flow rates (in gpm). The values in the table are based on the Hazen–Williams equation. *(See NFPA Fire Protection Handbook, 19th Edition, Section 7, Chapter 20 for information on Hose Line Fire Stream Calculations.)*

D.2.2 Selecting Large-Diameter Hose. The size and the amount of hose to be carried by the fire department should be selected to fit the needs of the area served and the financial resources of the department. Table D.2.2 can be used to assist in hose selection. A pumper rated 750 gpm (2850 L/min) at 150 psi (1035 kPa) operating from draft can relay 750 gpm (2850 L/min) through only 650 ft (200 m) of 3½ in. (89 mm) fire hose and have a 20 psi (138 kPa) intake pressure at the receiving pump. If 6 in. (150 mm) hose is used, that same pumper could move 750 gpm (2850 L/min) through 4300 ft (1300 m) of hose. While moving water this distance is theoretically possible, another factor is how much hose a pumper or other fire apparatus can carry. Trying to carry 4300 ft (1300 m) of 6 in. (150 mm) hose is certainly not practical. The table is designed to apply primarily to situations in which a fire department is relaying water with pumps discharging at 150 psi (1035 kPa) and wants 20 psi (138 kPa) residual pressure at the point receiving the flow.

Table D.2.2 Maximum Hose Length in Feet with 130 psi (900 kPa) Loss

Internal Diameter of Hose (in.)	Quantity of Water (gpm)					
	250	500	750	1,000	1,500	2,000
2½	1,000	250	—	—	—	—
3	2,600	650	250	150		—
3½	6,500	1,450	650	350	150	—
4	—	2,600	1,150	650	300	150
5	—	6,500	2,600	1,600	700	400
6	—	13,000	4,300	2,600	1,150	650

For SI units, 1 in. = 25.4 mm; 1 gpm = 3.785 L/min; 1 ft = 0.305 m; 1 psi = 0.0689 bar.

D.3 Load Capacity. Another important advantage associated with large-diameter hose is that one engine company laying large-diameter hose instead of multiple smaller lines is much more efficient in its water-moving capacity. The use of large-diameter hose with one engine speeds up the operation, which would otherwise need multiple smaller lines with additional pumpers, personnel, and equipment to accomplish the same job.

D.4 Powered Reel Trucks for Large-Diameter Hose. A number of trucks with powered hose reels with various hose load capacities are now in use. *(See Figure D.4.)*

The large-diameter hose now available is of a construction that permits field cleaning and does not require drying. The use of a reel truck permits rapid reloading using a minimum number of personnel (two), and the unit is capable of getting back into service sooner.

Such reel trucks generally require special power-driven systems to rewind the hose. The size of the reels is not conducive to fitting within most standard fire department pumper bodies. Therefore, hose reels are generally mounted on trucks specially designed for this operation.



FIGURE D.4 Apparatus with Reels for Large-Diameter Hose. ***(Courtesy of LLNL Fire Department)***

D.5 Fittings. Large-diameter hose is available with either standard threaded couplings or nonthreaded couplings that eliminate the male-female feature and, consequently, many adapters.

Special fittings, as described in D.5.1 through D.5.6, have been developed to be used with large-diameter hose.

D.5.1 Clappered Siamese Connection. During major fires, it is often desirable to supplement a water supply. If a clappered siamese is inserted into the large-diameter hose line at the source, a second pumper can provide an additional supply line at the water source. With the siamese in place, this second source can be added without interrupting the flow from the first supply. *(See Figure D.5.1.)*

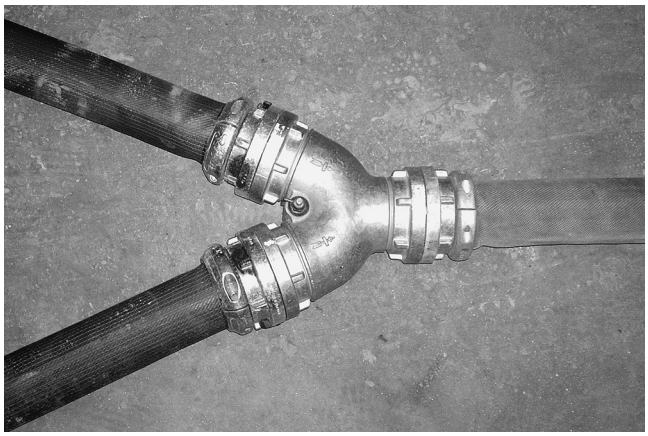

FIGURE D.5.1 Clappered Siamese Connection. ***(Courtesy of Dan MacDonald, New Boston, NH Fire Department)***

D.5.2 Line Relay Valve. If relay pumping is required, a line relay valve is inserted during the hose lay. This valve has a straight-through waterway, so water delivery can be started upon completion of the lay. The valve contains a gated outlet and a clappered inlet. Upon arrival of the relay pumper, a hose line is attached

--`,,```,,,,````-`-`,,`,,`,`,,`---

Copyright National Fire Protection Association
Provided by IHS under license with NFPA
No reproduction or networking permitted without license from IHS
Not for Resale

from the gated outlet to the suction of the pump, and a second hose line is attached from a pump discharge to the clappered inlet. When the valve to the hose line connected to the pump inlet is opened and the pump increases the pressure in the discharge hose line, the clapper in the line relay valve is closed and the full flow is diverted through the pump and back into the relay line to supply the fireground or another relay pumper. In addition, this valve contains an automatic air bleeder and a pressure dump valve set at 150 psi (1035 kPa). It is important to note that the relay pumper can be added to or removed from the line without shutting down the flow of water to the fireground. *(See Figure D.5.2.)*



FIGURE D.5.2 Line Relay Valve.

D.5.3 Four-Way Hydrant Valve. A four-way hydrant valve is a versatile valve that can be utilized on a hydrant where water is available but pressure is limited. The valve is attached to the hydrant, and the normal lay of supply line is initiated. Where additional pressure is required, a pumper is attached to the valve and begins boosting pressure to the fire scene without interrupting the flow of water from hydrant to fire. In rural applications, this valve can be equipped to lie in a line during hose lay and to allow a pumper to hook into the line and boost pressure without interrupting flow to the fire scene. *(See Figure D.5.3.)*

D.5.4 Distributor Valve. A distributor valve contains a 4 in. (100 mm) or 5 in. (125 mm) opening and waterway with two 2½ in. (65 mm) threaded male outlets. It is placed at the end of the supply line at the fireground, allowing distribution of water to one or more attack pumpers. The valve utilizes ball shutoffs on the discharge side plus an adjustable dump valve on the intake side. *(See Figure D.5.4.)*

D.5.5 Intake Gated Relief Valve. An intake gated relief valve is attached to the large suction inlet of the pumper. The supply line is connected directly to the valve. It is equipped with a slow-operating valve, an automatic air bleeder, and an adjustable dump valve. The gated valve allows the supply line to be connected while the pumper is utilizing the booster tank water. It is also used to control the volume of water from the supply line to the pump. The dump valve helps protect the pumper and supply line against pressure surges. *(See Figure D.5.5.)*

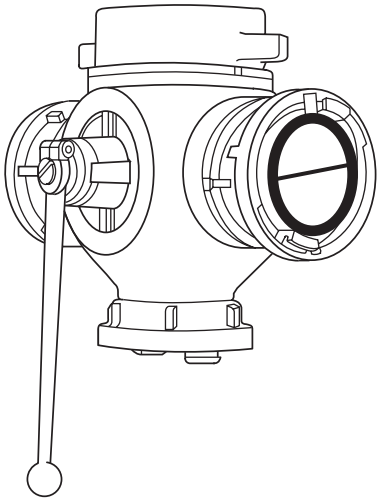

FIGURE D.5.3 Four-Way Hydrant Valve.



FIGURE D.5.4 Distributor Valve.

D.5.6 Air Bleeder. An air bleeder, whether automatic or manually operated, is needed at all points where a large-diameter hose is connected to a pump inlet or at any distribution point.

D.6 Irrigation Piping. Irrigation piping shares the same characteristics as large-diameter hose, the capability of transferring large volumes of water at relatively low friction loss. The use of irrigation in the farming community has increased throughout the country, resulting in lightweight aluminum pipe being available to the fire service. It can be carried on vehicles or used where available on the fireground.

The coupling arrangement for irrigation pipe usually will not permit its use for drafting. The pipe does provide a relatively permanent installation for long-duration fire fighting. Generally, irrigation pipe is an excellent tool for major disaster situations but is less often used for conventional fire-fighting evolutions, since it takes longer to set up than large-diameter fire hose.

Copyright National Fire Protection Association
Provided by IHS under license with NFPA
No reproduction or networking permitted without license from IHS
Not for Resale



FIGURE D.5.5 Intake Gated Relief Valve.

Departments working in areas in which piped irrigation systems are going to be used to supply fire-fighting water should be aware that adapters are needed to interconnect conventional agricultural fittings with fire hose fittings. Adapters used to change the pipe coupling to fire department hose threads can be easily fabricated in local machine shops. Care must be taken in such fabrication to ensure that the resulting adapter is safe to be used at any pressure the water supply system might be subjected to, including sudden pressure surges. Such adapters are not offered by either pipe or fire hose manufacturers. At least one adapter for use at the supply end of the pipe and one adapter for use at the discharge end of the pipe should be available. An example might include an adapter with four 2½ in. (65 mm) female inlets with National Hose (NH) thread adapting to a pipe coupling and an adapter from a pipe coupling to four 2½ in. (65 mm) NH gated male outlets. Another example would be adapters to connect large-diameter hose to either end of the pipe.

Additional fittings to provide a fire hose connection at 100 ft to 300 ft (30 m to 90 m) intervals [one or more 2½ in. (65 mm) NH per pipe section] might be desirable.

Annex E Portable Pumps

This annex is not a part of the requirements of this NFPA document but is included for informational purposes only.

E.1 General. Both diesel-driven and gasoline-driven portable pumps are available. The use of portable pumps is a common method for moving water by rural fire departments. All rural fire fighters should be able to place all portable pumps used by their department in operation, obtain draft, and perform each procedure in a minimal amount of time.

E.2 Description of a Portable Pump. A portable pump in the fire service means a pump that can be carried to a source by fire fighters, sometimes over difficult terrain. In general, two people should be able to conveniently carry the pump. It should weigh no more than 175 lb (79 kg) and be capable of supplying at least two 1½ in. (38 mm) handlines. It should also have handles and should be constructed to be carried in a compartment in the apparatus. Heavier pumps, perhaps trailer- or truck-mounted or otherwise made mobile, are valuable but used less commonly.

Although a number of rural fire departments have used portable-type pumps that are securely mounted on their apparatus as the sole means of pumping, few fire departments consider this arrangement to be permanent and most of those departments plan to buy a fire department pumper, in addition to the portable pump(s) when finances permit.

E.3 Evaluating Portable Pump Needs. In order to get the maximum benefit from portable pumps, the officers of the rural fire department should carefully study the needs of the department, taking into consideration the potential fire hazard, the available water supplies, and the capabilities of the department to use portable pumps. The accessibility and the reliability of water supplies determine the need for and use of portable pumps. Many rural fire departments have found that both a low-pressure pump and a high-pressure pump are required to fill their needs.

The portable pump selected should fit the fire-fighting system of which it is to be a component; if direct hose streams are to be taken from a portable pump, the nozzles and hose size determine the required pump discharge versus pressure characteristics.

E.4 Classifications or Types of Portable Pumps. Portable pumps come in a variety of pressure/volume combinations. It is important that the fire department study their needs and select a pump that will accomplish the objective.

E.4.1 Small Volume — Relatively High Pressure. A small-volume pumping unit should be capable of pumping 20 gpm (76 L/min) at 200 psi (1380 kPa) net pressure through a 1 in. (25 mm) discharge outlet while taking suction through a 1½ in. (38 mm) suction inlet. This class of portable pump is especially useful to fire departments for forest fire fighting, which frequently requires long ¾ in. to 1½ in. (19 mm to 38 mm) hose lines and uphill pumping in rugged terrain.

E.4.2 Medium Volume — Medium Pressure. A medium-volume pumping unit should be capable of discharging 60 gpm (227 L/min) at 90 psi (621 kPa) net pressure and 125 gpm (473 L/min) at 60 psi (414 kPa) net pressure through a 1½ in. (38 mm) discharge outlet while taking suction through a 2½ in. (65 mm) suction inlet.

E.4.3 Large Volume — Relatively Low Pressure. A large-volume pumping unit should be capable of supplying 125 gpm (475 L/min) at 60 psi (414 kPa) net pressure and 300 gpm (1136 L/min) at 20 psi (138 kPa) net pressure through a 2½ in. (65 mm) discharge outlet while taking suction through a 3 in. or 4 in. (75 mm or 100 mm) suction inlet.

Copyright National Fire Protection Association
Provided by IHS under license with NFPA
No reproduction or networking permitted without license from IHS
Not for Resale

E.5 Common Types of Pumps. The common types of pumps used are described in E.5.1 through E.5.4.

E.5.1 Low-Pressure Centrifugal Portable Pumps. Low-pressure centrifugal portable pumps (high volume) generally are rated at 200 gpm to 300 gpm (757 L/min to 1136 L/min) and are capable of discharge at pressures of 50 psi to 80 psi (345 kPa to 552 kPa). Usually these pumps will not discharge their rated capacity when they operate with a suction lift in excess of 5 ft (1.5 m).

Some low-pressure centrifugal portable pumps do not use running rings or seal rings. These types of pumps do not have close tolerances, so they can be used in dirty water where some debris or abrasives are encountered. These pumps require little maintenance.

Other types of low-pressure centrifugal portable pumps do have water or seal rings. If these pumps are pumping water containing substantial amounts of abrasive materials, the water or seal rings will not last as long as might be normally expected.

At lower discharge pressures, this type of pump can deliver larger volumes, which at times have been metered at 400 gpm to 600 gpm (1514 L/min to 2272 L/min), with adequate-size hard suction hose at very low discharge pressures and high pump rpm (e.g., relay from portable pump into fire pump on apparatus or portable drop tank; or relay from water source to drop tank where mobile water supply is filled for relay to fire site).

Operation of these pumps depends on centrifugal force to move water, and they are very effective for relay operations to pumper or for booster tank or mobile water supply filling. There are no special operating problems to watch out for, and these types of pumps will not heat up as rapidly as others if run without water.

E.5.2 High-Pressure Centrifugal Portable Pumps. High-pressure centrifugal portable pumps (small volume) generally have a small capacity, with an average of 30 gpm to 40 gpm (114 L/min to 151 L/min) discharge and operating pressures in the 125 psi to 250 psi (862 kPa to 1724 kPa) range.

The impeller is usually geared twice as fast as the engine to achieve single-stage pressure. This type of pump uses running rings or seal rings that are the same as those used for larger fire pumpers and usually incorporates closed volutes in the impeller.

E.5.3 Floating Pumps. A floating pump is a portable pump that primes and pumps automatically when it is placed in water. The pump is constructed to sit inside a float that resists breakage and needs no maintenance. Some entire units weigh under 50 lb (23 kg), including fuel, and provide 60 minutes to 90 minutes of operating time from the 5 qt (4.73 L) fuel tank.

The pump serves a need for a lightweight, easy-to-operate, portable fire pump that can be placed in the water and does not need suction hose or strainers. However, such pumps tend to pick up leaves and other trash that can block the nozzles and strainers downstream. *(See Figure E.5.3.)*

E.5.4 High-Lift Pumps. High-lift pumps are small, portable pumps that use water to drive a water motor, which in turn drives an impeller and pumps water to high elevations and into a fire pumper for relay into hose lines for fire fighting.

The high-lift pump is designed to obtain a water supply from a river, lake, stream, swimming pool, and so forth, where the source is not accessible for drafting operations using a pumper or a conventional portable pump.

The water used to power the water motor of a high-lift pump is taken from the booster tank of the pumper and discharged at high pressure through the fire pump into the hose to the high-lift pump water motor. Pressurized water, in turn, drives the water motor, which is connected to the high-lift pump impeller, thus forcing volumes of water back into the intake side of the fire pump and on into the fire-fighting hose lines.



FIGURE E.5.3 Floating Pump with 1½ in. (38 mm) Discharge Line. *(Courtesy of LLNL Fire Department)*

High-lift pumps can be hooked into hose lines and placed into water sources at lower levels without fire-fighting personnel having to go down to such sources to set the pump.

E.6 Methods of Using Portable Pumps.

E.6.1 General. Some of the many problems of supplying water in rural areas can frequently be overcome through the use of the proper portable pump. Many departments, through area pre-fire planning, locate water sources where portable pumps are the only suitable means of using the water supply for filling mobile water supply apparatus or for supplying fire-fighting hose lines.

Departments should, when locating a pumping site for portable pumps, determine whether the site is available year-round or whether it can be used only during certain times of the year. Further determination should be made as to the site's availability under the weather conditions anticipated. If such conditions could make use of the site difficult, a plan to prepare the site for all-weather utilization should be established.

Centrifugal pumps are usually preferred over other types because of their ability to handle dirt and abrasives with less damage and because of their desirable volume–pressure ratio. Similarly, four-cycle engines are considered more suitable for fire service use, although two-cycle or the new turbine-driven pumps can be used. However, four-cycle engines should be used with the engine in a level position or the engine will be damaged, whereas two-cycle engines can be used with the engine in any position (as long as fuel is available to the engine) without damage to the engine.

A wood pallet or other firm base can be useful under soft ground conditions.

E.6.2 Uses of Portable Pumps. Portable pumps can be used in single or multiple combinations to accomplish the following:

(1) Filling truck tanks where no fire department pumper is available

Copyright National Fire Protection Association
Provided by IHS under license with NFPA
No reproduction or networking permitted without license from IHS
Not for Resale

(2) Relaying water from a source in a variety of combinations or hookups

There are many factors to consider in deciding which size and type of portable pump will best fit a fire department's needs. Consideration should be given to the capabilities of the pump and its uses.

E.6.3 Relay to Mobile Water Supply Apparatus. Under conditions where a fire department pumper cannot get to a source of water and there is considerable distance (several miles) between the source and the fire, low-pressure portable pumps of larger volume have proved to be very satisfactory where they are used to relay water to a mobile water supply apparatus that shuttles water to a portable drop tank at the fire. A fire department pumper takes suction from the portable drop tank for discharge onto a fire. *(See Section C.14.)*

E.6.4 Single Relay from Portable Pump to Pumpers. Under conditions where a standard fire truck cannot get to a source of water, low-pressure portable pumps of larger volume have proved to be very satisfactory where they are used to relay water to pumpers. This method becomes feasible at a greater distance from water if large-diameter hose is used. *(See Figure E.6.4.)*

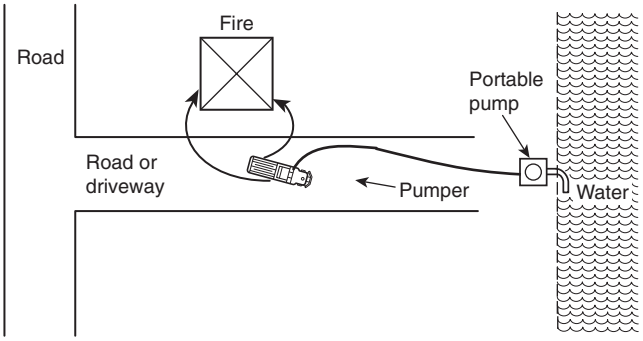

FIGURE E.6.4 Single Relay from Portable Pump to Pumper.

A single portable pump often can supply enough water to keep a pumper supplied with effective fire streams. The portable pump can be at the water source and a line laid from the portable pump to the pumper.

One of the big advantages of the portable pump is that it can be placed close to the water supply for operation at minimum lift and minimum friction loss in the suction hose, provided adequate-size suction hose is used. Regular pumpers can accept water from portable pumps and increase water pressure for fire streams or use the water in a combination of fire streams and booster tank filling.

A method commonly used is for a pumper to lay hose lines from the fire to the water supply and start pumping from the booster tank into the hose line and onto the fire while the portable pump is being placed and water supply and hose lines from the portable to the regular pumper are being hooked up. *(See Figure E.6.4.)*

E.6.5 Use of Portable Pumps to Fill Mobile Water Supply Apparatus or Booster Tanks. Many rural fire departments are overcoming problems of limited water supply by using mobile water supply apparatus to relay water to pumpers working at a fire. If the water supply is a stream with a small flow, for instance, 150 gpm (568 L/min), or if the water supply is inaccessible by fire apparatus, the water can be obtained with a portable pump placed at the water supply. This pump supplies a portable folding tank that is used to stockpile water, and mobile water supply apparatus are filled from the portable folding tank for shuttle to the fire. At the fire, the mobile water supply apparatus discharges its water into another portable folding tank that is used to stockpile water from which the pumper(s) takes suction and discharges water onto the fire. *(See Section C.14 and Figure E.6.5.)*

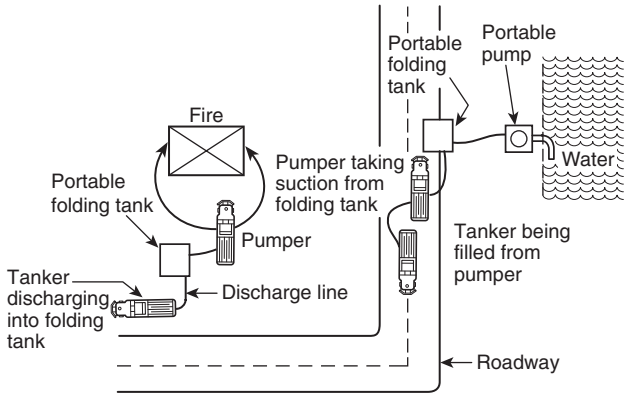

FIGURE E.6.5 Portable Pump Filling Portable Folding Tank.

It is not prudent to put the discharge line from portable pumps into the tops of booster tanks or mobile water supply apparatus unless there is no other way to fill the tank or a special filling device is provided. Placing lines into the tops of mobile water supply apparatus or booster tanks is a slow way of filling the tank and can be dangerous to those working on apparatus. Hooking the portable pump discharge line directly into intake piping of large pumpers or mobile water supply apparatus has proved to be the quickest and safest method of filling tanks.

Any of the portable pumps can be used in place of a pumper for filling mobile water supply apparatus; however, the low-pressure, high-volume-type pumps do the job more quickly than others. Where water is being pumped into tanks, strainers should be used to prevent the passage of trash and debris. Floating strainers have proved to be very effective.

Where the water supply has the capacity, multiple portable pumps for filling mobile water supply apparatus can increase filling efficiency. A 200 gpm to 300 gpm (757 L/min to 1136 L/min) rate results in a slow filling time; therefore, two or three portable pumps should be moved into the operation as mutual-aid mobile water supply apparatus arrive to achieve a 500 gpm (1900 L/min) filling rate. Multiple portable pumps also act as a backup in case of engine failure.

Annex F Automatic Sprinkler Protection

This annex is not a part of the requirements of this NFPA document but is included for informational purposes only.

F.1 Sprinkler Protection of Rural Buildings. With an increase in sprinklered buildings being constructed in rural areas, many rural fire departments are beginning to understand the value of automatic sprinkler protection. The sprinkler system

Copyright National Fire Protection Association
Provided by IHS under license with NFPA
No reproduction or networking permitted without license from IHS
Not for Resale

provides built-in fire protection, lessening the fire suppression burden and the water supply need on the fire department. Also, the record of the automatic sprinkler system performance is superior. NFPA records show that 96 percent of all fires in sprinklered buildings are controlled or extinguished by the sprinkler system, with a large percentage of these fires controlled by no more than two or three sprinkler heads. In the 3 percent to 4 percent of automatic sprinkler systems reported to have unsatisfactory performance, the following human failures have been noted:

(1) The sprinkler system was shut off and not in service.
(2) The fire department shut off the water to the sprinkler heads before the fire was completely extinguished.
(3) Fire department operations robbed the sprinkler system of its water supply.
(4) The fire department did not use the fire department connection.
(5) The sprinkler system was not designed to protect the existing hazards.

F.2 Water Supply for Automatic Sprinkler System. Sprinklered buildings are usually provided with a water supply such as an elevated tank, ground-level suction tank, or pond equipped with a fire pump. In a number of cases, a distribution system with hydrants is also provided.

F.3 The Fire Department and the Sprinkler System.

F.3.1 Installation of Water Supplies. Water supplies for the automatic sprinkler system referred to in Section 4.4, which consist of pumps and tank combinations feeding yard mains and a hydrant system, should be installed in accordance with NFPA 20, *Standard for the Installation of Stationary Pumps for Fire Protection*, and NFPA 22, *Standard for Water Tanks for Private Fire Protection.*

F.3.2 Applicable NFPA Standards. The following NFPA standards should be referenced where applicable:

(1) NFPA 13, *Standard for the Installation of Sprinkler Systems*
(2) NFPA 13D, *Standard for the Installation of Sprinkler Systems in One- and Two-Family Dwellings and Manufactured Homes*
(3) NFPA 13R, *Standard for the Installation of Sprinkler Systems in Residential Occupancies up to and Including Four Stories in Height*
(4) NFPA 15, *Standard for Water Spray Fixed Systems for Fire Protection*
(5) NFPA 16, *Standard for the Installation of Foam-Water Sprinkler and Foam-Water Spray Systems*

In addition, the fire department should be aware of the recommendations in NFPA 13E, *Recommended Practice for Fire Department Operations in Properties Protected by Sprinkler and Standpipe Systems.*

F.3.3 Use of Fire Department Connection. The standard operating procedures (SOPs) of each rural fire department should require one of the first-response pumpers to pump to the fire department connection of the sprinkler system. In this way, water pressure and volume to the system can be increased, making the sprinklers more effective. Also, the fire department connection should tie into the system beyond all valves that might be shut off; therefore, even with the valve controlling the water supply to the sprinkler system shut off, sprinkler heads can always be supplied with water through the fire department connection. After assessment by the officer in charge, a decision to charge the system might be warranted. The pressure available from the fire department pumper will not burst the piping or heads of the sprinkler system, as all parts of the system are designed and tested to withstand at least 200 psi (1380 kPa).

F.3.4 Shutting Off Sprinkler System After the Fire. The sprinkler system should not be shut down until the officer in charge is convinced that the fire is extinguished or controlled and handlines are in place for overhauling operations. Even then, the fire department pumper should not be disconnected from the fire department connection to the sprinkler system until the officer in charge is certain that the fire is out. A person should be stationed at the control valve of the sprinkler system, ready to reopen the valve in case of a flare-up during fire department mop-up operations.

Annex G Municipal-Type Water System

This annex is not a part of the requirements of this NFPA document but is included for informational purposes only.

G.1 General. The water supply for fire-fighting purposes, as specified in Chapter 4, is considered the minimum water supply necessary for basic fire fighting. It is assumed that the water is made available at the fire scene from a single water point such as a dry hydrant, often using a mobile water supply shuttle in conjunction with a portable folding tank(s) or a water supply relay.

The AHJ can determine that a municipal-type water system is warranted. This determination might be made as a result of an on-site survey of buildings by the fire department having jurisdiction or by review of architectural plans of proposed construction and planned development.

G.2 Need for Municipal-Type Water System. The determination of the need of a municipal-type water system is based on anticipation of a large-scale fire situation in a commercial building or a large area residential building. Such a situation would require a water supply delivery system that can best be achieved by a water system that includes hydrants, a distribution system, storage, and a source of supply capable of delivering a minimum flow of 250 gpm (950 L/min) at a gauge pressure of 20 psi (140 kPa) residual pressure for a 2-hour duration.

G.3 Developing Fire Flow Requirements for a Municipal-Type Water System. The factors to be considered in developing the fire flow requirements for a building on a municipal-type water system are shown in G.3.1 through G.3.4.

G.3.1 Type of Construction (C_i). Combustibility and fire resistance of the building itself greatly influence the development and spread of a fire and, to a large extent, determine the amount of water needed to control and extinguish a fire.

G.3.2 Size of Building (A_i). The greater the building height and the larger the undivided floor area, without fire walls, division walls, or other fire separation, the greater the potential for a large fire, and the greater the fire flow requirement.

G.3.3 Occupancy (O_i). A fire in a building having highly combustible contents will require a higher rate of water application than a fire in a building with contents of low combustibility. Examples are a wastepaper warehouse (highly combustible contents) and a steel pipe warehouse (contents with low combustibility), with many variations in between.

G.3.4 Exposures (X_i) and Communications (P_i). In addition to the water needed for a fire in the building under consideration, additional water might be needed to prevent a fire from spreading to nearby buildings. The amount of this extra water

Copyright National Fire Protection Association
Provided by IHS under license with NFPA
No reproduction or networking permitted without license from IHS
Not for Resale

will depend on such factors as the distance between buildings and the type of construction and size of the exposed and communicating buildings.

The method of determining the fire flow requirement in this annex does not include details for calculating an adequate amount of water for large, special fire protection problems, such as lumberyards, petroleum storage, refineries, grain elevators, and large chemical plants. For suggested protection, see applicable NFPA standards.

G.4 Calculation of Fire Flow. For calculating the fire flow requirement of a subject building in gallons per minute, the construction (C_i), occupancy (O_i), exposure (X_i), and communication (P_i) factors of the selected building or fire division are considered. Construction and occupancy hazard classification tables referenced in G.4.2 have been developed from equation information derived from the formula in G.4.1. Examples of actual calculations are included in Section G.5.

G.4.1 Construction Factor (C_i). That portion of the fire flow requirement attributed to the type of construction and area of the selected building or fire division is determined by the following formula:

$$C_i = 18F\left(A_i\right)^{0.5}$$

where:
C_i = construction factor
F = coefficient related to the class of construction as follows:
= 1.5 for wood frame construction
= 1.0 for ordinary construction
= 0.8 for noncombustible construction
= 0.6 for fire-resistive construction
A_i = effective area in square feet

The effective area is the total floor area of the largest story in the building plus the following percentages of the other stories:

(1) For buildings of construction Types II, III, IV, and V, 50 percent of the total floor area of all other stories
(2) For buildings of construction Type I, either of the following two percentages as applicable:
(a) If all vertical openings in the building have 1-hour or greater protection, 25 percent of the total floor area of the building not to exceed the floor area of the second- and third-largest stories
(b) In other buildings, 50 percent of the total floor area of the building not to exceed the area of eight additional stories

If division walls are rated at 1 hour or more, with labeled Class B fire doors on openings, the story is to be considered subdivided. The maximum area on any one story used is the largest undivided area plus 50 percent of the second largest undivided area on that story.

The floor area of basements and sub-basements that are vacant or are used for building maintenance, or that are occupied by light-hazard or low-hazard occupancies, are not to be included in the calculation of the effective area.

G.4.1.1 Calculating Predominant Construction. In buildings of mixed construction types, the predominant construction class is determined as shown in G.4.1.1.1 through G.4.1.1.4.

G.4.1.1.1 Fire Resistive. Any building with 66⅔ percent or more of the total wall area and 66⅔ percent or more of the total floor and roof area defined as construction Type I, is classified as fire resistive.

G.4.1.1.2 Noncombustible. Any building with 66⅔ percent or more of the total wall area and 66⅔ percent or more of the total floor and roof area defined as construction Types II and IV, or any building not qualifying under G.4.1.1.1, with 66⅔ percent or more of the total wall area and 66⅔ percent or more of the total floor and roof area constructed in two or more of construction Types I, II, and IV, but with no single type itself equal to 66⅔ percent or more of the total area, is classified noncombustible.

G.4.1.1.3 Ordinary. Any building not qualifying under G.4.1.1.1 or G.4.1.1.2, with 66⅔ percent or more of the total wall area of construction Type III, or any building not qualifying under G.4.1.1.1 or G.4.1.1.2, with 66⅔ percent or more of the total wall area and 66⅔ percent or more of the total floor and roof area constructed in two or more of construction Types I, II, III, and IV, but with no single type itself equal to 66⅔ percent or more of the total area, is classified as ordinary.

G.4.1.1.4 Frame. Any building not qualifying under G.4.1.1.1 through G.4.1.1.3, or any building with over 33⅓ percent of the total wall area of combustible construction, regardless of the type of construction of the balance of the building, is defined as construction Type V.

G.4.1.2 Limitations. In the application of G.4.1.1.1 through G.4.1.1.4, basement walls and the lowest floor level should be disregarded.

The maximum value of (C_i) is limited by the following:

(1) 8000 gpm (30,280 L/min) for wood frame and ordinary construction
(2) 6000 gpm (22,710 L/min) for noncombustible and fire-resistive construction
(3) 6000 gpm (22,710 L/min) for a one-story building of any type of construction

The minimum value of (C_i) is 250 gpm (950 L/min). The calculated value of (C_i) should be rounded to the nearest 250 gpm (950 L/min).

G.4.2 Occupancy Factor (O_i). The occupancy factors shown in Table G.4.2(a) reflect the influence of the occupancy hazard in the selected building on the fire flow requirement.

Table G.4.2(a) Influence of Occupancy in Determining Fire Flow Requirement

Occupancy Hazard Classification	Occupancy Factor (O_i)
7 (light hazard)	0.75
6 (low hazard)	0.85
5 (moderate hazard)	1.00
4 (high hazard)	1.15
3 (severe hazard)	1.25

Representative lists of occupancies by occupancy hazard classification number are located in Chapter 5.

Table G.4.2(b) through Table G.4.2(e) include the occupancy factors (O_i) applied for each type of construction.

--`,,```,,,,````-`-`,,`,,`,`,,`---
Copyright National Fire Protection Association
Provided by IHS under license with NFPA
No reproduction or networking permitted without license from IHS
Not for Resale

Table G.4.2(b) Wood Frame Construction (F = 1.5) and Occupancy Hazard Classification

Occupancy Hazard Class 7 O_i = 0.75			Occupancy Hazard Class 6 O_i = 0.85			Occupancy Hazard Class 5 O_i = 1.00			Occupancy Hazard Class 4 O_i = 1.15			Occupancy Hazard Class 3 O_i = 1.25		
Effective Area (ft^2)			Effective Area (ft^2)			Effective Area (ft^2)			Effective Area (ft^2)			Effective Area (ft^2)		
from	to	gpm	from	to	gpm	from	to	gpm	from	to	gpm	from	to	gpm
0	950	500	0	750	500	0	550	500	0	400	500	0	350	500
951	1850	750	751	1450	750	551	1050	750	401	800	750	351	650	750
1851	3100	1000	1451	2400	1000	1051	1750	1000	801	1300	1000	651	1100	1000
3101	4600	1250	2401	3600	1250	1751	2600	1250	1301	1950	1250	1101	1650	1250
4601	6450	1500	3601	5000	1500	2601	3600	1500	1951	2750	1500	1651	2300	1500
6451	8550	1750	5001	6650	1750	3601	4800	1750	2751	3650	1750	2301	3100	1750
8551	11000	2000	6651	9600	2124	4801	6200	2000	3651	4700	2000	3101	3950	2000
11001	13750	2250	9601	10700	2250	6201	7750	2250	4701	5850	2250	3951	4950	2250
13751	16800	2500	10701	13100	2500	7751	9450	2500	5851	7150	2500	4951	6050	2500
16801	20150	2750	13101	15700	2750	9451	11350	2750	7151	8550	2750	6051	7250	2750
20151	23800	3000	15701	18550	3000	11351	13400	3000	8551	10150	3000	7251	8550	3000
23801	27750	3250	18551	21600	3250	13401	15600	3250	10151	11800	3250	8551	10000	3250
27751	32050	3500	21601	24950	3500	15601	18000	3500	11801	13650	3500	10001	11550	3500
32051	36600	3750	24951	28500	3750	18001	20600	3750	13651	15550	3750	11051	13200	3750
36601	41500	4000	28501	32300	4000	20601	23350	4000	15551	17650	4000	13201	14950	4000
41501	46650	4250	32301	36350	4250	23351	26250	4250	17651	19850	4250	14951	16800	4250
46651	52150	4500	36351	40600	4500	26251	29350	4500	19851	22200	4500	16801	18750	4500
52151	57950	4750	40601	45100	4750	29351	32600	4750	22201	24650	4750	18751	20850	4750
57951	64050	5000	45101	49850	5000	32601	36000	5000	24651	27250	5000	20851	23050	5000
64051	70450	5250	49851	54850	5250	36001	39600	5250	27251	29950	5250	23051	25350	5250
70451	77150	5500	54851	60050	5500	39601	43400	5500	29951	32800	5500	25351	27750	5500
77151	84150	5750	60051	65500	5750	43401	47350	5750	32801	35800	5750	27751	30300	5750
84151	91450	6000	65501	71200	6000	47351	51450	6000	35801	38900	6000	30301	32950	6000
91451	99100	6250	71201	77150	6250	51451	55750	6250	38901	42150	6250	32951	35650	6250
99101	107000	6500	77151	83300	6500	55751	60200	6500	42151	45500	6500	35651	38550	6500
107001	115250	6750	83301	89700	6750	60201	64850	6750	45501	49000	6750	38551	41500	6750
115251	123800	7000	89701	96350	7000	64851	69650	7000	49001	52650	7000	41501	44550	7000
123801	132600	7250	96351	103250	7250	69651	74600	7250	52651	56400	7250	44551	47750	7250
132601	141750	7500	103251	110350	7500	74601	79750	7500	56401	60300	7500	47751	51050	7500
141751	151200	7750	110351	117750	7750	79751	85050	7750	60301	64300	7750	51051	54450	7750
151201	160950	8000	117751	125300	8000	85051	90550	8000	64301	68450	8000	54451	57950	8000

For SI units, 1 gpm = 0.0631 L/sec; 1 ft^2 = 0.093 m^2.

G.4.3 Exposure (X_i) and Communication (P_i) Factors. The factors X_i and P_i reflect the influence of exposed and communicating buildings, respectively, on the fire flow requirement. A value of $X_i + P_i$ should be developed for each side of the building. Where there is no exposure on any side, $X_i = 0$.

G.4.3.1 Factor for Exposure *(X_i)*. The exposure factor applies to only one side of the subject building and is determined based on the construction and the length–height value (length of wall in feet times height in stories) of the exposed building, and the distance between the facing walls of the subject building and the exposed building. The factor for X_i is selected from Table G.4.3.1.

The following buildings are not charged as exposures:

(1) Buildings fully protected by automatic sprinklers
(2) Buildings with a residential occupancy
(3) Buildings that are Type I construction
(4) Buildings with a blank masonry wall

G.4.3.2 Factor for Communication *(P_i)*. The factor for P_i depends on the protection for the communicating party wall openings and the length and construction of communications between fire divisions and is selected from Table G.4.3.2. Where more than one communication type exists in any one sidewall, only the largest factor P_i applies for that side. Where there is no communication on any side, $P_i = 0$.

G.4.4 Calculation. The fire flow *(FF)* for a municipal-type water system is calculated as follows:

$$FF = (C_i)(O_i)\left[1.0 + (X + P)_i\right]$$

where:
C_i = construction factor
O_i = occupancy factor
X_i = exposure factor
P_i = communication factor

Copyright National Fire Protection Association
Provided by IHS under license with NFPA
No reproduction or networking permitted without license from IHS
Not for Resale

Table G.4.2(c) Ordinary Construction (F = 1.0) and Occupancy Hazard Classification

Occupancy Hazard Class 7 O_i = 0.75			Occupancy Hazard Class 6 O_i = 0.85			Occupancy Hazard Class 5 O_i = 1.00			Occupancy Hazard Class 4 O_i = 1.15			Occupancy Hazard Class 3 O_i = 1.25		
Effective Area (ft^2)			Effective Area (ft^2)			Effective Area (ft^2)			Effective Area (ft^2)			Effective Area (ft^2)		
from	to	gpm	from	to	gpm	from	to	gpm	from	to	gpm	from	to	gpm
0	2150	500	0	1650	500	0	1200	500	0	900	500	0	750	500
2151	4200	750	1651	3250	750	1201	2350	750	901	1800	750	751	1500	750
4201	6950	1000	3251	5400	1000	2351	3900	1000	1801	2950	1000	1501	2500	1000
6951	10350	1250	5401	8050	1250	3901	5850	1250	2951	4400	1250	2501	3750	1250
10351	14500	1500	8051	11250	1500	5851	8150	1500	4401	6150	1500	3751	5200	1500
14501	19300	1750	11251	15000	1750	8151	10850	1750	6151	8200	1750	5201	6950	1750
19301	24750	2000	15001	21600	2124	10851	13950	2000	8201	10550	2000	6951	8900	2000
24751	30950	2250	21601	24100	2250	13951	17400	2250	10551	13150	2250	8901	11150	2250
30951	37800	2500	24101	29400	2500	17401	21250	2500	13151	16050	2500	11151	13600	2500
37801	45350	2750	29401	35300	2750	21251	25500	2750	16051	19300	2750	13601	16300	2750
45351	53550	3000	35301	41700	3000	25501	30150	3000	19301	22800	3000	16301	19300	3000
53551	62500	3250	41701	48650	3250	30151	35150	3250	22801	26550	3250	19301	22500	3250
62501	72100	3500	48651	56100	3500	35151	40550	3500	26551	30650	3500	22501	25950	3500
72101	82350	3750	56101	64150	3750	40551	46350	3750	30651	35050	3750	25951	29650	3750
82351	93350	4000	64151	72650	4000	46351	52500	4000	35051	39700	4000	29651	33600	4000
93351	105000	4250	72651	81750	4250	52501	59050	4250	39701	44650	4250	33601	37800	4250
105001	117350	4500	81751	91350	4500	59051	66000	4500	44651	49900	4500	37801	42250	4500
117351	130350	4750	91351	101500	4750	66001	73350	4750	49901	55450	4750	42251	46950	4750
130351	144100	5000	101501	112200	5000	73351	81050	5000	55451	61300	5000	46951	51850	5000
144101	158500	5250	112201	123400	5250	81051	89150	5250	61301	67400	5250	51851	57050	5250
158501	173550	5500	123401	135150	5500	89151	97650	5500	67401	73850	5500	57051	62500	5500
173551	189350	5750	135151	147400	5750	97651	106500	5750	73851	80550	5750	62501	68150	5750
189351	205800	6000	147401	160250	6000	106501	115750	6000	80551	87550	6000	68151	74100	6000
205801	222950	6250	160251	173600	6250	115751	125400	6250	87551	94850	6250	74101	80250	6250
222951	240800	6500	173601	187450	6500	125401	135450	6500	94851	102400	6500	80251	86700	6500
240801	259300	6750	187451	201900	6750	135451	145850	6750	102401	110300	6750	86701	93350	6750
259301	278500	7000	201901	216850	7000	145851	156650	7000	110301	118450	7000	93351	100250	7000
278501	298400	7250	216851	232300	7250	156651	167850	7250	118451	126900	7250	100251	107400	7250
298401	318950	7500	232301	248350	7500	167851	179400	7500	126901	135650	7500	107401	114850	7500
318951	340250	7750	248351	264900	7750	179401	191400	7750	135651	144700	7750	114851	122500	7750
340251	362150	8000	264901	281950	8000	191401	203700	8000	144701	154050	8000	122501	130400	8000

For SI units, 1 gpm = 0.0631 L/sec; 1 ft^2 = 0.093 m^2.

G.4.4.1 Where wood shake shingles as a roof covering are permitted by the AHJ (on the building being considered or on the exposed buildings), 500 gpm (1900 L/min) is added to the fire flow requirements unless such shingles are listed as Class C or higher.

G.4.4.2 The fire flow should not exceed 12,000 gpm (45,420 L/min) or be less than 250 gpm (950 L/min).

G.4.4.3 The fire flow requirement should be rounded off to the nearest 250 gpm (950 L/min) if less than 2500 gpm (9500 L/min), and to the nearest 500 gpm (1900 L/min) if greater than 2500 gpm (9500 L/min).

G.4.4.4 When all buildings in a planned area are protected with approved automatic sprinkler systems installed in accordance with NFPA 13, *Standard for the Installation of Sprinkler Systems*, or NFPA 13R, *Standard for the Installation of Sprinkler Systems in Residential Occupancies up to and Including Four Stories in Height*, and have an acceptable inspection and maintenance program in place, the fire flow requirements may be reduced by 75 percent but not below 1000 gpm (3800 L/min).

G.4.4.5 For one- and two-family dwellings not exceeding two stories in height and 4300 ft^2 (400 m^2) or less in effective area, Table G.4.4.5 should be used to determine the required fire flow from a municipal-type water system.

G.4.4.5.1 For one- and two-family dwellings exceeding 4300 ft^2 (400 m^2) in effective area, or over two stories in height, use the formula prescribed in G.4.4 to determine the fire flow requirement.

G.4.4.5.2 When all one- or two-family dwellings in a planned area consisting of only one- or two-family dwellings are protected with approved automatic sprinkler systems installed in accordance with NFPA 13, *Standard for the Installation of Sprinkler Systems*, NFPA 13D, *Standard for the Installation of Sprinkler Systems in One- and Two-Family Dwellings and Manufactured Homes*, or NFPA 13R, *Standard for the Installation of Sprinkler Systems in Residential Occupancies up to and Including Four Stories in Height*, and have an acceptable inspection and maintenance program in place, the fire flow requirements may be reduced by 75 percent but not below 500 gpm (1900 L/min).

Copyright National Fire Protection Association
Provided by IHS under license with NFPA
No reproduction or networking permitted without license from IHS
Not for Resale

Table G.4.2(d) Noncombustible Construction ($F = 0.8$) and Occupancy Hazard Classification

Occupancy Hazard Class 7 $O_i = 0.75$			Occupancy Hazard Class 6 $O_i = 0.85$			Occupancy Hazard Class 5 $O_i = 1.00$			Occupancy Hazard Class 4 $O_i = 1.15$			Occupancy Hazard Class 3 $O_i = 1.25$		
Effective Area (ft^2)			Effective Area (ft^2)			Effective Area (ft^2)			Effective Area (ft^2)			Effective Area (ft^2)		
from	to	gpm	from	to	gpm	from	to	gpm	from	to	gpm	from	to	gpm
0	3350	500	0	2600	500	0	1900	500	0	1400	500	0	1200	500
3351	6550	750	2601	5100	750	1901	3700	750	1401	2800	750	1201	2350	750
6551	10850	1000	5101	8450	1000	3701	6100	1000	2801	4600	1000	2351	3900	1000
10851	16200	1250	8451	12600	1250	6101	9100	1250	4601	6900	1250	3901	5850	1250
16201	22600	1500	12601	17600	1500	9101	12750	1500	6901	9600	1500	5851	8150	1500
22601	30100	1750	17601	23450	1750	12751	16950	1750	9601	12800	1750	8151	10850	1750
30101	38700	2000	23451	33750	2124	16951	21750	2000	12801	16450	2000	10851	13950	2000
38701	48350	2250	33751	37650	2250	21751	27200	2250	16451	20550	2250	13951	17400	2250
48351	59050	2500	37651	45950	2500	27201	33200	2500	20551	25100	2500	17401	21250	2500
59051	70850	2750	45951	55150	2750	33201	39850	2750	25101	30150	2750	21251	25500	2750
70851	83700	3000	55151	65150	3000	39851	47100	3000	30151	35600	3000	25501	30150	3000
83701	97600	3250	65151	76000	3250	47101	54900	3250	35601	41500	3250	30151	35150	3250
97601	112600	3500	76001	87700	3500	54901	63350	3500	41501	47950	3500	35151	40550	3500
112601	128700	3750	87701	100200	3750	63351	72400	3750	47951	54750	3750	40551	46350	3750
128701	145850	4000	100201	113550	4000	72401	82050	4000	54751	62050	4000	46351	52500	4000
145851	164050	4250	113551	127700	4250	82051	92300	4250	62051	69800	4250	52501	59050	4250
164051	183350	4500	127701	142750	4500	92301	103150	4500	69801	78000	4500	59051	66000	4500
183351	203700	4750	142751	158600	4750	103151	114600	4750	78001	86650	4750	66001	73350	4750
203701	225150	5000	158601	175300	5000	114601	126650	5000	86651	95750	5000	73351	81050	5000
225151	247650	5250	175301	192800	5250	126651	139300	5250	95751	105350	5250	81051	89150	5250
247651	271200	5500	192801	211150	5500	139301	152550	5500	105351	115350	5500	89151	97650	5500
271201	295850	5750	211151	230350	5750	152551	166400	5750	115351	125850	5750	97651	106500	5750
295851	321550	6000	230351	250350	6000	166401	180900	6000	125851	136800	6000	106501	115750	6000
321551	348350	6250	250351	271200	6250	180901	195950	6250	136801	148150	6250	115751	125400	6250
348351	376200	6500	271201	292900	6500	195951	211650	6500	148151	160000	6500	125401	135450	6500
376201	405150	6750	292901	315450	6750	211651	227900	6750	160001	172350	6750	135451	145850	6750
405151	435150	7000	315451	338800	7000	227901	244800	7000	172351	185100	7000	145851	156650	7000
435151	466250	7250	338801	363000	7250	244801	262250	7250	185101	198300	7250	156651	167850	7250
466251	498400	7500	363001	388000	7500	262251	280350	7500	198301	212000	7500	167851	179400	7500
498401	531600	7750	388001	413900	7750	280351	299050	7750	212001	226100	7750	179401	191400	7750
531601	565900	8000	413901	440600	8000	299051	318300	8000	226101	240700	8000	191401	203700	8000

For SI units, 1 gpm = 0.0631 L/sec; 1 ft^2 = 0.093 m^2.

G.5 Examples of Calculating Fire Flow for a Municipal-Type Water System. Seven examples of calculating fire flows for a municipal-type water system are shown in G.5.1 through G.5.7.

G.5.1 Example 1. A three-story ordinary-construction building occupied as a moderate hazard with an unused basement has a ground floor area of 7300 ft^2 (678.2 m^2). The effective area is as follows:

$$7300 + 0.5\ (7300 + 7300) = 14{,}600\ ft^2\ (1356.3\ m^2)$$

In Table G.4.2(c), the area of 14,600 ft^2 is between 13,951 ft^2 and 17,400 ft^2 (1296 m^2 and 1616.5 m^2); therefore, under occupancy hazard classification 5, the required water supply for the construction factor (C_i) and occupancy factor (O_i) is 2250 gpm (8500 L/min). There is no exposure or communication. The calculation of the fire flow (FF), rounded to the nearest 250 gpm (950 L/min) is as follows:

$$FF_i = (C_i)\ (O_i)\ [1.0 + (X + P)_i]$$
$$FF_i = 2250\ gpm\ [1.0 + (0 + 0)]$$
$$FF_i = 2250\ gpm\ (8500\ L/min)$$

G.5.2 Example 2. A three-story wood-frame building with a ground floor area of 7300 ft^2 (678.2 m^2) communicates through unprotected openings with a five-story, ordinary-construction building with a ground floor area of 9700 ft^2 (901.1 m^2). Both buildings are operated as moderate hazard. The basements have light-hazard and low-hazard contents. The effective area for the building is as follows:

$$7300 + 9700 + 0.5\ [2(7300) + 4(9700)]$$
$$= 43{,}700\ ft^2\ (4059.7\ m^2)$$

The $(C_i)\ (O_i)$ for the building is based on the predominant construction class of the building. In this example, more than 66⅔ percent of the total floor and roof area is of ordinary construction. The predominant construction class is ordinary construction. Therefore, under occupancy hazard classification 5, the value for $(C_i)\ (O_i)$ for an effective area of 43,700 ft^2 (4059.7 m^2) = 3750 gpm (14,213 L/min).

G.5.3 Example 3. A one-story, ordinary-construction building occupied as moderate hazard without a basement has

Copyright National Fire Protection Association
Provided by IHS under license with NFPA
No reproduction or networking permitted without license from IHS
Not for Resale

Table G.4.2(e) Fire-Resistive Construction ($F = 0.6$) and Occupancy Hazard Classification

Occupancy Hazard Class 7 $O_i = 0.75$			Occupancy Hazard Class 6 $O_i = 0.85$			Occupancy Hazard Class 5 $O_i = 1.00$			Occupancy Hazard Class 4 $O_i = 1.15$			Occupancy Hazard Class 3 $O_i = 1.25$		
Effective Area (ft^2)			Effective Area (ft^2)			Effective Area (ft^2)			Effective Area (ft^2)			Effective Area (ft^2)		
from	to	gpm	from	to	gpm	from	to	gpm	from	to	gpm	from	to	gpm
0	5950	500	0	4650	500	0	3350	500	0	2550	500	0	2150	500
5951	11650	750	4651	9050	750	3351	6550	750	2551	4950	750	2151	4200	750
11651	19250	1000	9051	15000	1000	6551	10850	1000	4951	8200	1000	4201	6950	1000
19251	28800	1250	15001	22400	1250	10851	16200	1250	8201	12250	1250	6951	10350	1250
28801	40200	1500	22401	31300	1500	16201	22600	1500	12251	17100	1500	10351	14500	1500
40201	53550	1750	31301	41700	1750	22601	30100	1750	17101	22800	1750	14501	19300	1750
53551	68800	2000	41701	60000	2124	30101	38700	2000	22801	29250	2000	19301	24750	2000
68801	85950	2250	60001	66900	2250	38701	48350	2250	29251	36550	2250	24751	30950	2250
85951	105000	2500	66901	81750	2500	48351	59050	2500	36551	44650	2500	30951	37800	2500
105001	125950	2750	81751	98050	2750	59051	70850	2750	44651	53550	2750	37801	45350	2750
125951	148800	3000	98051	115850	3000	70851	83700	3000	53551	63300	3000	45351	53550	3000
148801	173550	3250	115851	135100	3250	83701	97600	3250	63301	73800	3250	53551	62500	3250
173551	200200	3500	135101	155900	3500	97601	112600	3500	73801	85200	3500	62501	72100	3500
200201	228800	3750	155901	178100	3750	112601	128700	3750	85201	97300	3750	72101	82350	3750
228801	259250	4000	178101	201850	4000	128701	145850	4000	97301	110300	4000	82351	93350	4000
259251	291650	4250	201851	227050	4250	145851	164050	4250	110301	124050	4250	93351	105000	4250
291651	325950	4500	227051	253750	4500	164051	183350	4500	124051	138650	4500	105001	117350	4500
325951	362150	4750	253751	281950	4750	183351	203700	4750	138651	154050	4750	117351	130350	4750
362151	400250	5000	281951	311600	5000	203701	225150	5000	154051	170250	5000	130351	144100	5000
400251	440250	5250	311601	342750	5250	225151	247650	5250	170251	187250	5250	144101	158500	5250
440251	482150	5500	342751	375400	5500	247651	271200	5500	187251	205050	5500	158501	173550	5500
482151	525950	5750	375401	409500	5750	271201	295850	5750	205051	223700	5750	173551	189350	5750
525951	571700	6000	409501	445100	6000	295851	321550	6000	223701	243150	6000	189351	205800	6000
571701	619300	6250	445101	482150	6250	321551	348350	6250	243151	263400	6250	205801	222950	6250
619301	668850	6500	482151	520700	6500	348351	376200	6500	263401	284500	6500	222951	240800	6500
668851	720300	6750	520701	560750	6750	376201	405150	6750	284501	306350	6750	240801	259300	6750
720301	773600	7000	560751	602300	7000	405151	435150	7000	306351	329050	7000	259301	278500	7000
773601	828850	7250	602301	645300	7250	435151	466250	7250	329051	352550	7250	278501	298400	7250
828851	886000	7500	645301	689800	7500	466251	498400	7500	352551	376850	7500	298401	318950	7500
886001	945050	7750	689801	735800	7750	498401	531600	7750	376851	401950	7750	318951	340250	7750
945051		8000	735801	783250	8000	531601	565900	8000	401951	427900	8000	340251	362150	8000

For SI units, 1 gpm = 0.0631 L/sec; 1 ft^2 = 0.093 m^2.

an area of 210,000 ft^2 (19,509 m^2). The effective total area is 210,000 ft^2 (19,509 m^2). Table G.4.2(c) indicates a $(C_i)(O_i)$ of over 8000 gpm (30,280 L/min). However, as ordinary construction , the $(C_i)(O_i)$ maximum is 8000 gpm (30,280 L/min) *[see G.4.1.2(1)]*. In this example, the value for $(C_i)(O_i)$ is further reduced to 6000 gpm (22,710 L/min) as this is a one-story building *[see G.4.1.2(3)]*.

G.5.4 Example 4. A two-story, wood-frame building occupied as moderate hazard has an area of 60,000 ft^2 (5574 m^2) and communicates through unprotected openings to a one-story, noncombustible building with an area of 45,000 ft^2 (4180.5 m^2). The effective area is 45,000 + 60,000 + 0.5 (60,000) = 135,000 ft^2 (12,541.5 m^2).

The $(C_i)(O_i)$ for the building is based on the predominant construction class of the building. In this case, more than 33⅓ percent of the total wall area is of combustible construction. Therefore, the predominant construction class is wood-frame construction.

Therefore, under occupancy hazard classification 5, the value for $(C_i)(O_i)$ for an effective area of 135,000 ft^2 (12,541.5 m^2) = 8000 gpm (30,280 L/min).

G.5.5 Example 5. The subject building, a two-story building of 175 ft × 100 ft (53.3 m × 30.5 m), is located 15 ft (4.6 m) east of an exposed building identical in construction and area. Both buildings have unprotected openings. The length–height value of the exposed building is 2 × 175 ft = 350. From Table G.4.3.1, the exposure factor (X_i) is 0.19, or 19 percent.

G.5.6 Example 6. The subject building, a one-story wood-frame building of 75 ft × 100 ft (22.9 m × 30.5 m), communicates on the long side through an enclosed frame passageway 25 ft (7.6 m) in length, to an ordinary-construction building. Both buildings have unprotected window openings. The length–height value is 1 × 100 = 100. The exposure factor (X_i) for this side from Table G.4.3.1 is 0.15. The communication factor (P_i) for this side from Table G.4.3.2 is 0.30. The exposure and communication factor for this side $(X_i) + (P_i)$ for the sum of 0.15 and 0.30 = 0.45.

Copyright National Fire Protection Association
Provided by IHS under license with NFPA
No reproduction or networking permitted without license from IHS
Not for Resale

Table G.4.3.1 Factor for Exposure (X_i)

Construction of Facing Wall of Subject Building	Distance to the Exposed Building (ft)	Length–Height Value of Facing Wall of Exposed Building	Construction Classes of Facing Wall of Exposed Building			
				Construction Class 2, 4, 5, and 6		
			Construction Class 1, 3	Unprotected Openings	Semiprotected Openings*	Blank Wall
Frame, metal, or masonry with openings	0–10	1–100	0.22	0.21	0.16	0
		101–200	0.23	0.22	0.17	0
		201–300	0.24	0.23	0.18	0
		301–400	0.25	0.24	0.19	0
		>400	0.25	0.25	0.20	0
	11–30	1–100	0.17	0.15	0.11	0
		101–200	0.18	0.16	0.12	0
		201–300	0.19	0.18	0.14	0
		301–400	0.20	0.19	0.15	0
		>400	0.20	0.19	0.15	0
	31–60	1–100	0.12	0.10	0.07	0
		101–200	0.13	0.11	0.08	0
		201–300	0.14	0.13	0.10	0
		301–400	0.15	0.14	0.11	0
		>400	0.15	0.15	0.12	0
	61–100	1–100	0.08	0.06	0.04	0
		101–200	0.08	0.07	0.05	0
		201–300	0.09	0.08	0.06	0
		301–400	0.10	0.09	0.07	0
		>400	0.10	0.10	0.08	0
Blank masonry wall	Where the facing wall of the exposed building is higher than subject building, use Table G.4.3.1, *except* use only the length–height of facing wall of the exposed building *above* the height of the facing wall of the subject building. Buildings five stories or over in height are considered five-story buildings. Where the height of the facing wall of the exposed building is the same or lower than the height of the facing wall of the subject building, $X_i = 0$.					

For SI units, 1 ft = 0.305 m.

*Wired glass or outside open sprinklers.

Table G.4.3.2 Factor for Communications (P_i)

Description of Protection of Passageway Openings	Fire-Resistive, Noncombustible, or Slow-Burning Communications (ft)				Communications with Combustible Construction (ft)					
	Open	Enclosed			Open			Enclosed		
	Any length	≤10	11–20	21–50*	≤10	11–20	21–50*	≤10	11–20	21–50*
Unprotected	0	†	0.30	0.20	0.30	0.20	0.10	†	†	0.30
Single Class A fire door at one end of passageway	0	0.20	0.10	0	0.20	0.15	0	0.30	0.20	0.10
Single Class B fire door at one end of passageway	0	0.30	0.20	0.10	0.25	0.20	0.10	0.35	0.25	0.15
Single Class A fire door at each end or double Class A fire doors at one end of passageway	0	0	0	0	0	0	0	0	0	0
Single Class B fire door at each end or double Class B fire doors at one end of passageway	0	0.10	0.05	0	0	0	0	0.15	0.10	0

For SI units, 1 ft = 0.305 m.

Notes:

(1) Where a party wall has communicating openings protected by a single automatic- or self-closing Class B fire door, it qualifies as a division wall for reduction of area.

(2) Where communications are protected by a recognized water curtain, the value of $P_i = 0$.

*For over 50 ft, $P_i = 0$.

†For unprotected passageways of this length, consider the two buildings as a single fire division.

Copyright National Fire Protection Association
Provided by IHS under license with NFPA
No reproduction or networking permitted without license from IHS
Not for Resale

Table G.4.4.5 Fire Flow for Residential Property

Distance Between Buildings		Fire Flow	
ft	m	gpm	L/min
>100	>30	500	1900
31–100	9.5–30	750	2850
11–30	3.4–9.4	1000	3800
≤10	≤3.3	1500	5700

G.5.7 Example 7. The subject building is a one-story single-family residence with a 15 ft (5 m) side setback. The fire flow is 1000 gpm (3800 L/min) from G.4.4.5.

G.6 Fire Flow Duration. The fire flow determined by G.4.4 should be able to be sustained for at least the amount of time shown in Table G.6.

Table G.6 Duration of Fire Flow

Fire Flow		
gpm	L/min	Duration (hr)
≤2,500	≤9,500	2
3,000–3,500	11,350–13,250	3
≥4,000	≥15,100	4

G.7 Fire Hydrants.

G.7.1 Hydrant Distribution. The fire flow requirement for the building and occupancy to be protected is calculated using the procedure outlined in Section G.4. Hydrants should be placed so that the total allowance for hydrants within 1000 ft (304.8 m) of the building is at least equal to the fire flow calculated. Up to 1000 gpm (3800 L/min) should be allowed from each hydrant within 300 ft (91 m) of the building, up to 670 gpm (2536 L/min) from each hydrant within 301 ft (92 m) to 600 ft (182 m) of the building, and up to 250 gpm (950 L/min) from hydrants within 601 ft to 1000 ft (183 m to 305 m) of the building.

G.7.2 Hydrant Design. All fire hydrants should be three-way hydrants having two hose outlets and a pumper outlet. When a hydrant has two or more hose outlets with no pumper outlet, the maximum allowance is to be 75 percent of that allowed for a hydrant within 300 ft (91 m) of the building. Therefore, for hydrants with two or more hose outlets and with no pumper outlet, up to 750 gpm (2850 L/min) is to be allowed for each such hydrant within 300 ft (91 m) of the building; however, 670 gpm (2536 L/min) is to be allowed for such hydrants within 301 ft to 600 ft (92 m to 182 m) of the building and 250 gpm (950 L/min) from hydrants within 601 ft to 1000 ft (183.2 m to 305 m) of the building.

Annex H Calculating Minimum Water Supplies

This annex is not a part of the requirements of this NFPA document but is included for informational purposes only.

H.1 General. This annex provides examples of calculations of minimum water supplies as required in Chapter 4, and precalculated minimum water supply tables by occupancy hazard classification and construction classification where no exposures are present.

H.2 Structures Without Exposure Hazards. The examples in H.2.1 through H.2.3 show calculations of minimum water supplies for structures where there are no exposures.

H.2.1 Residential. A dwelling has the following characteristics: (1) a ground floor of 50 ft × 24 ft; (2) two stories of 8 ft each; (3) a pitched roof, 8 ft from attic floor to ridgepole; and (4) wood frame (Type V) construction. The calculations for minimum water supply are as follows:

Ground floor area = 50 ft × 24 ft = 1200 ft^2

Height = 8 ft + 8 ft + 4 ft = 20 ft (For pitched roofs, use half the distance from attic floor to ridgepole.)

Total volume = 1200 ft^2 × 20 ft = 24,000 ft^3

The occupancy hazard classification number is 7 *(see 5.2.5)*. The construction classification number is 1.0, maximum for a frame dwelling *(see 6.2.2)*, resulting in the following calculations:

$$\frac{24{,}000}{7} \times 1.0 = 3429 \text{ gal}$$

The minimum water supply equals 3429 gal.

For SI units: 1 ft = 0.305 m; 1 ft^2 = 0.092 m^2; 1 ft^3 = 0.028 m^3; 1 gal = 3.785 L.

H.2.2 Commercial. A farm equipment shed has the following characteristics: (1) a ground floor of 125 ft × 100 ft; (2) height of 14 ft; (3) one story; (4) flat roof; and (5) noncombustible (Type II) construction. The calculations for minimum water supply are as follows:

Ground floor area = 125 ft × 100 ft = 12,500 ft^2

Height = 14 ft

Total volume = 12,500 ft^2 × 14 ft = 175,000 ft^3

The occupancy hazard classification number is 5 *(see 5.2.3)*, and the construction classification number is 0.75 *(see Table 6.2.1)*, resulting in the following calculations:

$$\frac{175{,}000}{5} \times 0.75 = 26{,}250 \text{ gal}$$

The minimum water supply equals 26,250 gal.

For SI units: 1 ft = 0.305 m; 1 ft^2 = 0.092 m^2; 1 ft^3 = 0.028 m^3; 1 gal = 3.785 L.

H.2.3 Multiple-Structure Calculations. A property has two structures on it, a church and an office, which are 60 ft apart, so there is no exposure hazard. However, the two buildings will be served by a single water source, which will need to be sized for the largest demand.

The church has the following characteristics: (1) a ground floor of 130 ft × 60 ft; (2) height of 25 ft to ridgepole (15 ft from ground to eaves, with pitched roof 10 ft above the eaves); and (3) brick (Type III) construction. The calculations for minimum water supply are as follows:

Ground floor area = 130 ft × 60 ft = 7800 ft^2

Height = 15 ft + 5 ft = 20 ft (For pitched roofs, use half the distance from attic floor to ridgepole.)

Total volume = 7800 ft^2 × 20 ft = 156,000 ft^3

The occupancy hazard classification number is 6 *(see 5.2.4)*, and the construction classification number is 1.0 *(see Table 6.2.1)*, resulting in the following calculation:

$$\frac{156{,}000}{6} \times 1.0 = 26{,}000 \text{ gal}$$

The minimum water supply for the church equals 26,000 gal.

Copyright National Fire Protection Association
Provided by IHS under license with NFPA
No reproduction or networking permitted without license from IHS
Not for Resale

The office building has the following characteristics: (1) a ground floor of 175 ft × 100 ft; (2) two stories, each story 10 ft high; (3) a flat roof; and (4) fire-resistive (Type I) construction. The calculations for minimum water supply are as follows:

Ground floor area = 175 ft × 100 ft = 17,500 ft^2

Height = 10 ft + 10 ft = 20 ft

Total volume = 17,500 ft^2 × 20 ft = 350,000 ft^3

The occupancy hazard classification number is 7 *(see 5.2.5)*, and the construction classification number is 0.5 *(see Table 6.2.1)*, resulting in the following calculations:

$$\frac{350{,}000}{7} \times 0.5 = 25{,}000 \text{ gal}$$

The minimum water supply for the office equals 25,000 gal.

This is a multiple-structure location served from a single water source, with the supply determined by the structure having the larger water supply requirement. The water supply for the church is 26,000 gal, and the water supply for the office is 25,000 gal. Therefore, the church has the larger water supply requirement and the minimum water supply for the site equals 26,000 gal.

For SI units: 1 ft = 0.305 m; 1 ft^2 = 0.092 m^2; 1 ft^3 = 0.028 m^3; 1 gal = 3.785 L.

H.2.4 Precalculated Water Supply. Table H.2.4(a) through Table H.2.4(c) provide a quick method for determining the water supply requirements of this standard for structures without exposures.

To use the tables, first determine the total volume of the structure in cubic feet. Then, locate the closest corresponding volume in the left-hand column and read across to find the total gallons of water supply required for the occupancy hazard classification and the construction classification of the structure.

For example, a farm storage building such as a barn (occupancy hazard classification 4) of ordinary (Type III) construction (construction classification 1.0) with a total volume of 160,000 ft^3 (4480 m^3) will produce, using Table H.2.4(a), a water supply requirement of 40,000 gal (151,400 L).

Table H.2.4(a) Precalculated Minimum Water Supplies (in Gallons) for Occupancy Hazard Classifications 3 and 4 by Construction Classification (No Exposures)

Volume (ft^3)	Occupancy Hazard Classification 3				Occupancy Hazard Classification 4			
	Construction Classification				Construction Classification			
	0.5	0.75	1.0	1.5	0.5	0.75	1.0	1.5
8,000	2,000	2,000	2,667	4,000	2,000	2,000	2,000	3,000
10,000	2,000	3,000	4,000	6,000	2,000	2,250	3,000	4,500
16,000	2,667	4,000	5,333	8,000	2,000	3,000	4,000	6,000
20,000	3,333	5,000	6,667	10,000	2,500	3,750	5,000	7,500
24,000	4,000	6,000	8,000	12,000	3,000	4,500	6,000	9,000
28,000	4,667	7,000	9,333	14,000	3,500	5,250	7,000	10,500
32,000	5,333	8,000	10,667	16,000	4,000	6,000	8,000	12,000
36,000	6,000	9,000	12,000	18,000	4,500	6,750	9,000	13,500
40,000	6,667	10,000	13,333	20,000	5,000	7,500	10,000	15,000
44,000	7,333	11,000	14,667	22,000	5,500	8,250	11,000	16,500
48,000	8,000	12,000	16,000	24,000	6,000	9,000	12,000	18,000
52,000	8,667	13,000	17,333	26,000	6,500	9,750	13,000	19,500
56,000	9,333	14,000	18,667	28,000	7,000	10,500	14,000	21,000
60,000	10,000	15,000	20,000	30,000	7,500	11,250	15,000	22,500
64,000	10,667	16,000	21,333	32,000	8,000	12,000	16,000	24,000
68,000	11,333	17,000	22,667	34,000	8,500	12,750	17,000	25,500
72,000	12,000	18,000	24,000	36,000	9,000	13,500	18,000	27,000
76,000	12,667	19,000	25,333	38,000	9,500	14,250	19,000	28,500
80,000	13,333	20,000	26,667	40,000	10,000	15,000	20,000	30,000
84,000	14,000	21,000	28,000	42,000	10,500	15,750	21,000	31,500
88,000	14,667	22,000	29,333	44,000	11,000	16,500	22,000	33,000
92,000	15,333	23,000	30,667	46,000	11,500	17,250	23,000	34,500
96,000	16,000	24,000	32,000	48,000	12,000	18,000	24,000	36,000
100,000	16,667	25,000	33,333	50,000	12,500	18,750	25,000	37,500
104,000	17,333	26,000	34,667	52,000	13,000	19,500	26,000	39,000
108,000	18,000	27,000	36,000	54,000	13,500	20,250	27,000	40,500
112,000	18,667	28,000	37,333	56,000	14,000	21,000	28,000	42,000
116,000	19,333	29,000	38,667	58,000	14,500	21,750	29,000	43,500
120,000	20,000	30,000	40,000	60,000	15,000	22,500	30,000	45,000
124,000	20,667	31,000	41,333	62,000	15,500	23,250	31,000	46,500
128,000	21,333	32,000	42,667	64,000	16,000	24,000	32,000	48,000
132,000	22,000	33,000	44,000	66,000	16,500	24,750	33,000	49,500
136,000	22,667	34,000	45,333	68,000	17,000	25,500	34,000	51,000
140,000	23,333	35,000	46,667	70,000	17,500	26,250	35,000	52,500

Copyright National Fire Protection Association
Provided by IHS under license with NFPA
No reproduction or networking permitted without license from IHS
Not for Resale

Table H.2.4(a) *Continued*

Volume (ft^3)	Occupancy Hazard Classification 3				Occupancy Hazard Classification 4			
	Construction Classification				Construction Classification			
	0.5	0.75	1.0	1.5	0.5	0.75	1.0	1.5
144,000	24,000	36,000	48,000	72,000	18,000	27,000	36,000	54,000
148,000	24,667	37,000	49,333	74,000	18,500	27,750	37,000	55,500
152,000	25,333	38,000	50,667	76,000	19,000	28,500	38,000	57,000
156,000	26,000	39,000	52,000	78,000	19,500	29,250	39,000	58,500
160,000	26,667	40,000	53,333	80,000	20,000	30,000	40,000	60,000
175,000	29,167	43,750	58,333	87,500	21,875	32,813	43,750	65,625
200,000	33,333	50,000	66,667	100,000	25,000	37,500	50,000	75,000
225,000	37,500	56,250	75,000	112,500	28,125	42,188	56,250	84,375
250,000	41,667	62,500	83,333	125,000	31,250	46,875	62,500	93,750
275,000	45,833	68,750	91,667	137,500	34,375	51,563	68,750	103,125
300,000	50,000	75,000	100,000	150,000	37,500	56,250	75,000	112,500
325,000	54,167	81,250	108,333	162,500	40,625	60,938	81,250	121,875
350,000	58,333	87,500	116,667	175,000	43,750	65,625	87,500	131,250
375,000	62,500	93,750	125,000	187,500	46,875	70,313	93,750	140,625
400,000	66,667	100,000	133,333	200,000	50,000	75,000	100,000	150,000
425,000	70,833	106,250	141,667	212,500	53,125	79,688	106,250	159,375
450,000	75,000	112,500	150,000	225,000	56,250	84,376	112,500	168,750
475,000	79,167	118,750	158,333	237,500	59,375	89,063	118,750	178,125
500,000	83,333	125,000	166,667	250,000	62,500	93,751	125,000	187,500
525,000	87,500	131,250	175,000	262,500	65,625	98,438	131,250	196,875
550,000	91,667	137,500	183,333	275,000	68,750	103,126	137,500	206,250
575,000	95,833	143,750	191,667	287,500	71,875	107,813	143,750	215,625
600,000	100,000	150,000	200,000	300,000	75,000	112,501	150,000	225,000
625,000	104,167	156,250	208,333	312,500	78,125	117,188	156,250	234,375
650,000	108,333	162,500	216,667	325,000	81,250	121,876	162,500	243,750
675,000	112,500	168,750	225,000	337,500	84,375	126,563	168,750	253,125
700,000	116,667	175,000	233,333	350,000	87,500	131,251	175,000	262,500
725,000	120,833	181,250	241,667	362,500	90,625	135,938	181,250	271,875
750,000	125,000	187,500	250,000	375,000	93,750	140,626	187,500	281,250
775,000	129,167	193,750	258,333	387,500	96,875	145,313	193,750	290,625
800,000	133,333	200,000	266,667	400,000	100,000	150,001	200,000	300,000
825,000	137,500	206,250	275,000	412,500	103,125	154,688	206,250	309,375
850,000	141,667	212,500	283,333	425,000	106,250	159,376	212,500	318,750
875,000	145,833	218,750	291,667	437,500	109,375	164,064	218,750	328,125
900,000	150,000	225,000	300,000	450,000	112,500	168,751	225,000	337,500
925,000	154,167	231,250	308,333	462,500	115,265	173,439	231,250	346,875
950,000	158,333	237,500	316,667	475,000	118,750	178,126	237,500	356,250
975,000	162,500	243,750	325,000	487,500	121,875	182,814	243,750	365,625
1,000,000	166,667	250,000	333,333	500,000	125,000	187,501	250,000	375,000

For SI units, 1 m^3 = 35.3 ft^3, 1 gal = 3.785 L

Note: For structures with exposures, multiply the water supply requirements in the table by 1.5.

Copyright National Fire Protection Association
Provided by IHS under license with NFPA
No reproduction or networking permitted without license from IHS
Not for Resale

Table H.2.4(b) Precalculated Minimum Water Supplies (in Gallons) for Occupancy Hazard Classifications 5 and 6 by Construction Classification (No Exposures)

Volume (ft^2)	Occupancy Hazard Classification 5				Occupancy Hazard Classification 6			
	Construction Classification				Construction Classification			
	0.5	0.75	1.0	1.5	0.5	0.75	1.0	1.5
8,000	2,000	2,000	2,000	2,400	2,000	2,000	2,000	2,000
10,000	2,000	2,000	2,400	3,600	2,000	2,000	2,000	3,000
16,000	2,000	2,400	3,200	4,800	2,000	2,000	2,667	4,000
20,000	2,000	3,000	4,000	6,000	2,000	2,500	3,333	5,000
24,000	2,400	3,600	4,800	7,200	2,000	3,000	4,000	6,000
28,000	2,800	4,200	5,600	8,400	2,333	3,500	4,667	7,000
32,000	3,200	4,800	6,400	9,600	2,667	4,000	5,333	8,000
36,000	3,600	5,400	7,200	10,800	3,000	4,500	6,000	9,000
40,000	4,000	6,000	8,000	12,000	3,333	5,000	6,667	10,000
44,000	4,400	6,600	8,800	13,200	3,667	5,500	7,333	11,000
48,000	4,800	7,200	9,600	14,400	4,000	6,000	8,000	12,000
52,000	5,200	7,800	10,400	15,600	4,333	6,500	8,667	13,000
56,000	5,600	8,400	11,200	16,800	4,667	7,000	9,333	14,000
60,000	6,000	9,000	12,000	18,000	5,000	7,500	10,000	15,000
64,000	6,400	9,600	12,800	19,200	5,333	8,000	10,667	16,000
68,000	6,800	10,200	13,600	20,400	5,667	8,500	11,333	17,000
72,000	7,200	10,800	14,400	21,600	6,000	9,000	12,000	18,000
76,000	7,600	11,400	15,200	22,800	6,333	9,500	12,667	19,000
80,000	8,000	12,000	16,000	24,000	6,667	10,000	13,333	20,000
84,000	8,400	12,600	16,800	25,200	7,000	10,500	14,000	21,000
88,000	8,800	13,200	17,600	26,400	7,333	11,000	14,667	22,000
92,000	9,200	13,800	18,400	27,600	7,667	11,500	15,333	23,000
96,000	9,600	14,400	19,200	28,800	8,000	12,000	16,000	24,000
100,000	10,000	15,000	20,000	30,000	8,333	12,500	16,667	25,000
104,000	10,400	15,600	20,800	31,200	8,667	13,000	17,333	26,000
108,000	10,800	16,200	21,600	32,400	9,000	13,500	18,000	27,000
112,000	11,200	16,800	22,400	33,600	9,333	14,000	18,667	28,000
116,000	11,600	17,400	23,200	34,800	9,667	14,500	19,333	29,000
120,000	12,000	18,000	24,000	36,000	10,000	15,000	20,000	30,000
124,000	12,400	18,600	24,800	37,200	10,333	15,500	20,667	31,000
128,000	12,800	19,200	25,600	38,400	10,667	16,000	21,333	32,000
132,000	13,200	19,800	26,400	39,600	11,000	16,500	22,000	33,000
136,000	13,600	20,400	27,200	40,800	11,333	17,000	22,667	34,000
140,000	14,000	21,000	28,000	42,000	11,667	17,500	23,333	35,000
144,000	14,400	21,600	28,800	43,200	12,000	18,000	24,000	36,000
148,000	14,800	22,200	29,600	44,400	12,333	18,500	24,667	37,000
152,000	15,200	22,800	30,400	45,600	12,667	19,000	25,333	38,000
156,000	15,600	23,400	31,200	46,800	13,000	19,500	26,000	39,000
160,000	16,000	24,000	32,000	48,000	13,333	20,000	26,667	40,000
175,000	17,500	26,250	35,000	52,500	14,583	21,875	29,167	43,750
200,000	20,000	30,000	40,000	60,000	16,667	25,000	33,333	50,000
225,000	22,500	33,750	45,000	67,500	18,750	28,125	37,500	56,250
250,000	25,000	37,500	50,000	75,000	20,833	31,250	41,667	62,500
275,000	27,500	41,250	55,000	82,500	22,917	34,375	45,833	68,750
300,000	30,000	45,000	60,000	90,000	25,000	37,500	50,000	75,000
325,000	32,500	48,750	65,000	97,500	27,083	40,625	54,167	81,250
350,000	35,000	52,500	70,000	105,000	29,167	43,750	58,333	87,500
375,000	37,500	56,250	75,000	112,500	31,250	46,875	62,500	93,750
400,000	40,000	60,000	80,000	120,000	33,333	50,000	66,667	100,000
425,000	42,500	63,750	85,000	127,500	35,417	53,125	70,833	106,250
450,000	45,000	67,500	90,000	135,000	37,500	56,250	75,000	112,500
475,000	47,500	71,250	95,000	142,500	39,583	59,375	79,167	118,750
500,000	50,000	75,000	100,000	150,000	41,667	62,500	83,333	125,000
525,000	52,500	78,750	105,000	157,500	43,750	65,625	87,500	131,250
550,000	55,000	82,500	110,000	165,000	45,833	68,750	91,667	137,500

Copyright National Fire Protection Association
Provided by IHS under license with NFPA
No reproduction or networking permitted without license from IHS
Not for Resale

Table H.2.4(b) *Continued*

Volume (ft^2)	Occupancy Hazard Classification 5				Occupancy Hazard Classification 6			
	Construction Classification				Construction Classification			
	0.5	0.75	1.0	1.5	0.5	0.75	1.0	1.5
575,000	57,500	86,250	115,000	172,500	47,917	71,875	95,833	143,750
600,000	60,000	90,000	120,000	180,000	50,000	75,000	100,000	150,000
625,000	62,500	93,750	125,000	187,500	52,083	78,125	104,167	156,250
650,000	65,000	97,500	130,000	195,000	54,167	81,250	108,333	162,500
675,000	67,500	101,250	135,000	202,500	56,250	84,375	112,500	168,750
700,000	70,000	105,000	140,000	210,000	58,333	87,500	116,667	175,000
725,000	72,500	108,750	145,000	217,500	60,417	90,625	120,833	181,250
750,000	75,000	112,500	150,000	225,000	62,500	93,750	125,000	187,500
775,000	77,500	116,250	155,000	232,500	64,583	96,875	129,167	193,750
800,000	80,000	120,000	160,000	240,000	66,667	100,000	133,333	200,000
825,000	82,500	123,750	165,000	247,500	68,750	103,125	137,500	206,250
850,000	85,000	127,500	170,000	255,000	70,833	106,250	141,667	212,500
875,000	87,500	131,250	175,000	262,500	72,917	109,375	145,833	218,750
900,000	90,000	135,000	180,000	270,000	75,000	112,500	150,000	225,000
925,000	92,500	138,750	185,000	277,500	77,083	115,625	154,167	231,250
950,000	95,000	142,500	190,000	285,000	79,167	118,750	158,333	237,500
975,000	97,500	146,250	195,000	292,500	81,250	121,875	162,500	243,750
1,000,000	100,000	150,000	200,000	300,000	83,333	125,000	166,667	250,000

For SI units, 1 m^3 = 35.3 ft^3, 1 gal = 3.785 L
Note: For structures with exposures, multiply the water supply requirements in the table by 1.5.

Table H.2.4(c) Precalculated Minimum Water Supplies (in Gallons) for Occupancy Hazard Classification 7 by Construction Classification (No Exposures)

Volume (ft^3)	Occupancy Hazard Classification 7			
	Construction Classification			
	0.5	0.75	1.0	1.5
8,000	2,000	2,000	2,000	2,000
10,000	2,000	2,000	2,000	2,571
16,000	2,000	2,000	2,286	3,429
20,000	2,000	2,143	2,857	4,286
24,000	2,000	2,571	3,429	5,143
28,000	2,000	3,000	4,000	6,000
32,000	2,286	3,429	4,571	6,857
36,000	2,572	3,857	5,143	7,714
40,000	2,857	4,286	5,714	8,571
44,000	3,143	4,714	6,286	9,429
48,000	3,429	5,143	6,857	10,286
52,000	3,715	5,571	7,429	11,143
56,000	4,000	6,000	8,000	12,000
60,000	4,286	6,429	8,571	12,857
64,000	4,572	6,857	9,143	13,714
68,000	4,857	7,286	9,714	14,571
72,000	5,143	7,714	10,286	15,429
76,000	5,429	8,143	10,857	16,286
80,000	5,715	8,571	11,429	17,143
84,000	6,000	9,000	12,000	18,000
88,000	6,286	9,429	12,571	18,857
92,000	6,572	9,857	13,143	19,714
96,000	6,857	10,286	13,714	20,571
100,000	7,143	10,714	14,286	21,429

Table H.2.4(c) *Continued*

Volume (ft^3)	Occupancy Hazard Classification 7			
	Construction Classification			
	0.5	0.75	1.0	1.5
104,000	7,429	11,143	14,857	22,286
108,000	7,715	11,571	15,429	23,143
112,000	8,000	12,000	16,000	24,000
116,000	8,286	12,429	16,571	24,857
120,000	8,572	12,857	17,143	25,714
124,000	8,857	13,286	17,714	26,571
128,000	9,143	13,714	18,286	27,429
132,000	9,429	14,143	18,857	28,286
136,000	9,715	14,571	19,429	29,143
140,000	10,000	15,000	20,000	30,000
144,000	10,286	15,429	20,571	30,857
148,000	10,572	15,857	21,143	31,714
152,000	10,857	16,286	21,714	32,571
156,000	11,143	16,714	22,286	33,429
160,000	11,429	17,143	22,857	34,286
175,000	12,500	18,750	25,000	37,500
200,000	14,286	21,429	28,571	42,857
225,000	16,071	24,107	32,143	48,214
250,000	17,857	26,786	35,714	53,571
275,000	19,643	29,464	39,286	58,929
300,000	21,429	32,143	42,857	64,286
325,000	23,214	34,821	46,429	69,643
350,000	25,000	37,500	50,000	75,000
375,000	26,786	40,179	53,571	80,357
400,000	28,571	42,857	57,143	85,714
425,000	30,357	45,536	60,714	91,071

(continues)

--`,,```,,,,````-`-`,,`,,`,`,,`---
Copyright National Fire Protection Association
Provided by IHS under license with NFPA
No reproduction or networking permitted without license from IHS
Not for Resale

Table H.2.4(c) *Continued*

Volume (ft^3)	Occupancy Hazard Classification 7			
	Construction Classification			
	0.5	0.75	1.0	1.5
450,000	32,143	48,214	64,286	96,429
475,000	33,929	50,893	67,857	101,786
500,000	35,714	53,571	71,429	107,143
525,000	37,500	56,250	75,000	112,500
550,000	39,286	58,929	78,571	117,857
575,000	41,071	61,607	82,143	123,214
600,000	42,857	64,286	85,714	128,571
625,000	44,643	66,964	89,286	133,929
650,000	46,429	69,643	92,857	139,286
675,000	48,214	72,321	96,429	144,643
700,000	50,000	75,000	100,000	150,000
725,000	51,786	77,679	103,571	155,357
750,000	53,571	80,357	107,143	160,714
775,000	55,357	83,036	110,714	166,071
800,000	57,143	85,714	114,286	171,429
825,000	58,929	88,393	117,857	176,786
850,000	60,714	91,071	121,429	182,143
875,000	62,500	93,750	125,000	187,500
900,000	64,286	96,429	128,571	192,857
925,000	66,071	99,107	132,143	198,214
950,000	67,857	101,786	135,714	203,571
975,000	69,643	104,464	139,286	208,929
1,000,000	71,429	107,143	142,857	214,286

For SI units, 1 m^3 = 35.3 ft^3, 1 gal = 3.785 L

Note: For structures with exposures, multiply the water supply requirements in the table by 1.5.

H.3 Structures with Exposure Hazards. Examples of calculations for minimum water supply for structures with exposure hazards are shown in H.3.1 and H.3.2.

H.3.1 Residential. A dwelling has the following characteristics: (1) a ground floor of 50 ft × 24 ft; (2) one story, 8 ft high; (3) pitched roof, 8 ft from attic floor to ridgepole; (4) Type III construction; and (5) exposed on one side by a frame (Type V construction) dwelling with an area greater than 100 ft^2 and a separation of less than 50 ft. The calculations for minimum water supply are as follows:

Ground floor area = 50 ft × 24 ft = 1200 ft^2

Height = 8 ft + 4 ft = 12 ft (For pitched roofs, use half the distance from attic floor to ridgepole.)

Total volume = 1200 ft^2 × 12 ft = 14,400 ft^3

The occupancy hazard classification number is 7 *(see 5.2.5)*, and the construction classification number is 1.0 *(see Table 6.2.1)*, resulting in the following calculation:

$$\frac{14{,}400}{7} \times 1.0 = 2057 \text{ gal}$$

The dwelling exposure is a frame dwelling; therefore, multiply by the exposure factor of 1.5 as follows:

2057 gal × 1.5 = 3086 gal

The minimum water supply equals 3086 gal.

For SI units: 1 ft = 0.305 m; 1 ft^2 = 0.092 m^2; 1 ft^3 = 0.028 m^3; 1 gal = 3.785 L.

H.3.2 Multiple-Structure Calculations. The following are examples of minimum water supply calculations where there are multiple structures.

Example 1. A row of five dwellings is identical to the dwelling in H.2.1, except that one dwelling has a brick barn (Type III construction) measuring 80 ft × 40 ft that is located 35 ft from the dwelling. The barn is larger than 100 ft^2 in area and is less than 50 ft from the dwelling. Therefore, the minimum water supply for this dwelling, 3429 gal, should be multiplied by 1.5 for the exposure:

3429 gal × 1.5 = 5144 gal

If the dwellings and barn are to be protected by the same water supply, as is likely, the water supply should be calculated based on the structure that requires the largest minimum water supply. If the barn has no hay storage and is 25 ft in height to the pitched ridgepole, and the ridgepole is 10 ft above the eaves, the calculations would be as follows:

Ground floor area = 80 ft × 40 ft = 3200 ft^2

Height = 15 ft + 5 ft = 20 ft (For pitched roofs, use half the distance from attic floor to ridgepole.)

Total volume = 3200 ft^2 × 20 ft = 64,000 ft^3

The occupancy hazard classification number is 4 for the barn with no hay storage *(see 5.2.2)*, and the construction classification number is 1.0 *(see Table 6.2.1)*, resulting in the following calculations:

$$\frac{64{,}000}{4} \times 1.0 = 16{,}000 \text{ gal}$$

16,000 × 1.5 for exposure hazard = 24,000 gal

The minimum water supply equals 24,000 gal. Since this is larger than the 5144 gal required for the dwelling, 24,000 gal would be the minimum water supply for the barn and dwelling.

For SI units: 1 ft = 0.305 m; 1 ft^2 = 0.092 m^2; 1 ft^3 = 0.028 m^3; 1 gal = 3.785 L.

Example 2. A farm equipment shed is identical to commercial occupancy in H.2.2, except that it has a one-story, pitched-roof frame dwelling (Type V Construction) measuring 50 ft × 25 ft that is located 45 ft from the equipment shed. The dwelling is an exposure because it is larger than 100 ft^2 in area and is less than 50 ft from the equipment shed. Therefore, the minimum water supply for the equipment shed is 26,250 gal × 1.5, or 39,375 gal.

The minimum water supply for the farm equipment shed equals 39,375 gal.

The total water supply for the dwelling is calculated as follows:

Ground floor area = 50 ft × 25 ft = 1250 ft^2

Height = 8 ft + 4 ft = 12 ft

Total volume = 1250 ft^2 × 12 ft = 15,000 ft^3

The occupancy hazard classification number is 7 *(see 5.2.5)*, and the construction classification number is 1.0 *(see 6.2.2)*, resulting in the following calculation:

$$\frac{15{,}000}{7} \times 1.0 = 2143 \text{ gal}$$

The dwelling has an exposure from the farm equipment shed; therefore, multiply by the exposure factor of 1.5 as follows:

2143 gal × 1.5 = 3215 gal

--`,,```,,,,````-`-`,,`,,`,`,,`---

Copyright National Fire Protection Association
Provided by IHS under license with NFPA
No reproduction or networking permitted without license from IHS

Not for Resale

The farm equipment shed requires the larger minimum water supply. Therefore, if these two buildings were to be protected by the same water supply, the minimum water supply would be 39,375 gal.

For SI units: 1 ft = 0.305 m; 1 ft^2 = 0.092 m^2; 1 ft^3 = 0.028 m^3; 1 gal = 3.785 L.

Example 3. If the church and office building described in H.2.3 are less than 50 ft from each other, they would be exposures to each other. Therefore, the required water supply for the church would be 26,000 gal × 1.5 for the exposure factor, or 39,000 gal. Likewise, the water supply for the office building would be 25,000 gal × 1.5 for the exposure factor, or 37,500 gal. The larger amount would dictate the minimum water supply requirement for the site, which in this case would be 39,000 gal.

For SI units: 1 ft = 0.305 m; 1 ft^2 = 0.092 m^2; 1 ft^3 = 0.028 m^3; 1 gal = 3.785 L.

Annex I Dry Hydrant Design

This annex is not a part of the requirements of this NFPA document but is included for informational purposes only.

I.1 The dry hydrant design worksheet shown in Figure I.1(a) and the dry hydrant hardware layout worksheet shown in Figure I.1(b) in conjunction with Table I.1(a) through Table I.1(h) can be used to assist in the design or evaluation of a dry hydrant installation. The tables allow for flow calculations and conversions between various pipe materials to assist in determining the size of pipe and fittings that will be needed to match the dry hydrant system design and the capability of the pumps expected to be used at the dry hydrant site.

Start with the dry hydrant design worksheet *[Figure I.1(a)]*.

The process of designing a dry hydrant system discussed in this Annex and the values shown in Table I.1(a) through Table I.1(h) are based on calculations in U.S. units. Values in metric units must be converted to U.S. units prior to being used with worksheets shown in Figure I.1(a) and Figure I.1(b).

Lines 1–3: Enter the name of the fire department and the location and identification of the dry hydrant. Include the latitude and longitude of the site in decimal degrees format and the map datum being used. Examples of map datum include the North American Datum (NAD) 83, the World Geodetic System (WGS) 84, or the Universal Transverse Mercator (UTM). Use the map datum that is compatible with your GIS platform.

Line 4: Determine and record the flow rate that the completed system is expected to flow. NFPA 1142 requires a minimum flow rate of 1000 gpm.

Line 5: Determine the elevation above sea level of the site where the dry hydrant is to be installed and record that elevation.

Line 6: From Table I.1(a), determine and record the normal atmospheric pressure at that elevation. This is the theoretical pressure loss that could occur in the system if a pump connected to the dry hydrant could create a perfect vacuum. Because the pumps on fire apparatus are not 100 percent efficient, all of the available atmospheric pressure cannot be used to offset the pressure loss in the dry hydrant system and to move water within the system.

Line 7: Determine the lift from the surface of the water to the center of the pump intake that will be connected to the dry hydrant. Account for times of drought in determining the height of the surface of the water. Be sure the measurement is to the center of the pump intake, not just to the center of the outlet on the dry hydrant system. The outlet on the dry hydrant system should never be higher than the inlet on the pump intake. Record this measurement in feet and multiply it by 0.434 to get the credited pressure loss.

Line 8: Vapor pressure, a part of the total site pressure loss, is based on the temperature of the water. Determine the maximum temperature the water is expected to reach during the hottest part of the year. Then using Table I.1(b), find and record the vapor pressure.

Line 9: A pressure loss constant of 5 psi is used as the loss from the water passing through the entrance to the pump and the pump's intake system, including the loss due to internal turbulence in the intake system.

Line 10: Subtract the sum of the lift (line 7), the vapor pressure (line 8), and the pressure loss in the pump's intake system (line 9) from the atmospheric pressure (line 6) and record the result. This result is the available site pressure or the pressure that is available to overcome the pressure loss in the designed dry hydrant system and in the suction hose for the chosen water flow rate.

Line 11: Using the dry hydrant hardware layout worksheet *[Figure I.1(b)],* record the size and description in column A of each component in the dry hydrant system, except fittings that produce a sudden reduction in diameter, which will be calculated later on the dry hydrant design worksheet line 12. Six-inch or larger pipe is recommended due to the reduction in friction loss and to the increase in water supply, for very little incremental cost.

Start at the strainer and work to the pump intake connection. A value of 5 ft of pipe is shown on the dry hydrant hardware layout worksheet *[Figure I.1(b)]* for the strainer with the assumption that the sum of the area of all holes in the strainer is equal to at least four times the cross-sectional area of the pipe. For each fitting that does not reduce the pipe size, use Table I.1(c) to determine the equivalent feet of straight pipe represented by the fitting and record that value in column B. If the pipe or fitting has a C value other than 150, use Table I.1(d) to determine the conversion to C = 150 for the material involved. For example, if the pipe is cement-lined cast iron with a "C" value of 140, the conversion value is 1.14 to equate it to a C value of 150. Multiply the length of the pipe or the noted equivalent lengths by the conversion factor and record that value in column C.

Next, using Table I.1(e), determine the friction loss per foot of pipe for the size of the pipe. Multiply the friction loss by the feet of pipe or equivalent to get the loss in psi in that component of the piping system. Record that value in column D.

A value of 1 ft is shown for the connection between the adapter where the suction hose connects to the dry hydrant system and the elbow at the vertical end of the dry hydrant system. Add the values in column D to get the loss in the piping system. Now return to the dry hydrant design worksheet *[see Figure I.1(a)]* and enter the same on line 11 as just recorded on Figure I.1(b).

Line 12: Record each fitting that reduces the pipe size; for example, a 6 in. × 5 in. reducer. Using Table I.1(f), determine the pressure loss for each reduction where two different diameter pipe sizes are used or where a reducer is used for the suction hose connection adapter at the dry hydrant head.

Copyright National Fire Protection Association
Provided by IHS under license with NFPA
No reproduction or networking permitted without license from IHS
Not for Resale

Line 13: Record the pressure loss due to velocity head that is created when water begins to move from being at rest. In the case of a dry hydrant, this flow is from a static pressure of 0 psi. Table I.1(g) provides the velocity head in psi for different pipe sizes and flow rates. If two sizes of pipe are used in the dry hydrant system, the value for the smaller pipe should be used.

Line 14: Begin by recording the size and length of suction hose that will be used to connect the fire department pump to the dry hydrant. Using Table I.1(h), determine the pressure loss in the suction hose used to connect the pumper to the dry hydrant. Note that the loss is per 10 ft section of suction hose, so it is necessary to adjust the loss if more than 10 ft of suction hose will need to be used. Record the loss.

Line 15: Add the loss in the pipe and fittings (line 11), the loss from sudden reductions (line 12), the velocity head (line 13), and the head loss in the suction hose (line 14). This result is the pressure needed to overcome the piping and water movement loss. Record that value on line 15.

Line 16: Subtract the total loss (line 15) from the available site pressure (line 10) and record that value on line 16. If the result is a positive number, the user can repeat the process using a greater flow to get an idea of the potential capability of the dry hydrant. If the result on line 16 is a negative number, the capability of the dry hydrant is not equal to the desired flow rate shown on line 4 of the dry hydrant design worksheet, and adjustments might need to be made. If the system is already installed or limited to the piping arrangement used in the calculation, this will mean revising the design flow rate downward and repeating the calculations. If the design can be changed and the result in line 16 is negative by 3.00 or greater, it will probably be advantageous to use a larger diameter pipe.

Line 17: Record any comments about the system that are important to document as well as any special situations pertinent to the system.

Once the system is installed, backflush the system to ensure that there is no blockage or foreign matter in the system. The system should be backflushed at no more than 20 psi. Then the system should be flow tested to determine that the calculated flow can be obtained. If there is a significant difference between the calculated flow and the actual flow, and the actual flow is lower, there could be a design error, a leak in the system, a pump equipment problem, or a restriction in the system.

Figure I.1(c) and Figure I.1(d) show an example of a completed dry hydrant design worksheet and dry hydrant hardware layout worksheet. The Sampletown Fire Department is planning to install a dry hydrant at 123 Country Lane at latitude 37.345 and longitude 118.575 on the NAD 83 datum. This will be dry hydrant SFD 06. The elevation at the area is 2500 ft, and the design is for a 1000 gpm flow. In laying out the system, there is a need for 25 ft of horizontal 6 in. pipe and 10 ft of vertical pipe with two 90-degree long-sweep elbows. PVC pipe and fittings will be used for this installation. A 6 in. × 5 in. reducer will be used where the suction hose will connect to the dry hydrant. A 10 ft length of 5 in. suction hose will be used to connect the pumper to the dry hydrant. The distance from the surface of the water to the centerline of the pump is 6 ft.

Copyright National Fire Protection Association
Provided by IHS under license with NFPA
No reproduction or networking permitted without license from IHS
Not for Resale

DRY HYDRANT DESIGN WORKSHEET

1. Fire Department _____
2. Dry hydrant location _____
   Latitude/Longitude _____ / _____ Datum _____
3. Dry hydrant ID number _____

4. Design flow rate _____ gpm
5. Elevation of site above sea level _____ ft
6. Normal atmospheric pressure [from Table I.1(a)] _____ psi
7. Lift _____ ft × 0.434 _____ psi
8. Water temperature _____ °F
   vapor pressure [from Table I.1(b)] _____ psi
9. Pressure loss at pump intake **5.0** psi

Available site pressure

10. Line 6 minus (line 7 + line 8 + line 9) _____ psi
11. Pressure loss in pipe and fittings
    (from Dry Hydrant Hardware Layout Worksheet) _____ psi
12. Pressure loss from sudden reduction [from Table I.1(f)]
    _____ × _____ _____ psi
    _____ × _____ _____ psi
    _____ × _____ _____ psi
13. Velocity head [from Table I.1(g)] _____ psi
14. Pressure loss in suction hose [from Table I.1(h)]
    Size _____ in.
    No. of 10 ft length(s) _____ × _____ tabular value = _____ psi
15. Pressure needed to overcome piping and water movement loss
    Add (line 11 + line 12 + line 13 + line 14) _____ psi
16. Resulting calculation of available site pressure
    Enter line 10 minus line 15 _____ psi
17. Comments _____

For SI units: 1 gal = 3.785 L; 1 ft = 0.305 m; 1 in. = 2.54 mm; 1 psi = 6.895 kPa.

© 2007 National Fire Protection Association NFPA 1142 (p. 1 of 1)

FIGURE I.1(a) Dry Hydrant Design Worksheet.

Copyright National Fire Protection Association
Provided by IHS under license with NFPA
No reproduction or networking permitted without license from IHS
Not for Resale

DRY HYDRANT HARDWARE LAYOUT WORKSHEET

A Description and Size	B Straight line equivalent feet of pipe[1]	C Conversion for pipe coefficient[2]	D Loss (psi)[3]
Strainer[4]	5		
1 ft of 6 in. pipe	1		

Pressure loss in piping system _____ psi

[1] See Table I.1(c).

[2] See Table I.1(d) if applicable for C less than 150.

[3] See Table I.1(e).

[4] The area of all holes must be at least four times the cross-sectional area of the pipe. A figure of 5 equivalent ft is used regardless of the strainer pipe diameter.

For SI units: 1 gal = 3.785 L; 1 ft = 0.305 m; 1 in. = 2.54 mm; 1 psi = 6.895 kPa.

© 2007 National Fire Protection Association NFPA 1142 (p. 1 of 1)

FIGURE I.1(b) Dry Hydrant Hardware Layout Worksheet.

Copyright National Fire Protection Association
Provided by IHS under license with NFPA
No reproduction or networking permitted without license from IHS
Not for Resale

DRY HYDRANT DESIGN WORKSHEET

1. Fire Department Sampletown Fire Department
2. Dry hydrant location 123 Country Lane
   Latitude/Longitude 37.345 / 118.575 Datum NAD 83
3. Dry hydrant ID number SFD 06

4. Design flow rate	1000	gpm
5. Elevation of site above sea level	2500	ft
6. Normal atmospheric pressure [from Table I.1(a)]	13.45	psi
7. Lift 6 ft × 0.434	2.6	psi
8. Water temperature 70 °F vapor pressure [from Table I.1(b)]	0.36	psi
9. Pressure loss at pump intake	**5.0**	psi
Available site pressure		
10. Line 6 minus (line 7 + line 8 + line 9)	5.49	psi
11. Pressure loss in pipe and fittings (from Dry Hydrant Hardware Layout Worksheet)	2.12	psi
12. Pressure loss from sudden reduction [from Table I.1(f)]		
6 × 5	0.15	psi
×		psi
×		psi
13. Velocity head [from Table I.1(g)]	0.87	psi
14. Pressure loss in suction hose [from Table I.1(h)] Size 5 in. No. of 10 ft length(s) 1 × 0.64 tabular value =	0.64	psi
15. Pressure needed to overcome piping and water movement loss Add (line 11 + line 12 + line 13 + line 14)	3.78	psi
16. Resulting calculation of available site pressure Enter line 10 minus line 15	1.71	psi

17. Comments

For SI units: 1 gal = 3.785 L; 1 ft = 0.305 m; 1 in. = 2.54 mm; 1 psi = 6.895 kPa.

© 2007 National Fire Protection Association

NFPA 1142 (p. 1 of 1)

FIGURE I.1(c) Example Using Dry Hydrant Design Worksheet.

Copyright National Fire Protection Association
Provided by IHS under license with NFPA
No reproduction or networking permitted without license from IHS
Not for Resale

DRY HYDRANT HARDWARE LAYOUT WORKSHEET

A Description and Size	B Straight line equivalent feet of pipe[1]	C Conversion for pipe coefficient[2]	D Loss (psi)[3]
Strainer[4]	5		0.156
25 ft of 6 in. PVC horizontal	25		0.78
6 in. long sweep elbow	13.57		0.42
10 ft of 6 in. PVC vertical	10		0.312
6 in. long sweep elbow	13.57		0.42
1 ft of 6 in. pipe	1		0.0312
Pressure loss in piping system			2.12 psi

[1] See Table I.1(c).

[2] See Table I.1(d) if applicable for C less than 150.

[3] See Table I.1(e).

[4] The area of all holes must be at least four times the cross-sectional area of the pipe. A figure of 5 equivalent ft is used regardless of the strainer pipe diameter.

For SI units: 1 gal = 3.785 L; 1 ft = 0.305 m; 1 in. = 2.54 mm; 1 psi = 6.895 kPa.

© 2007 National Fire Protection Association

NFPA 1142 (p. 1 of 1)

FIGURE I.1(d) Example Using Dry Hydrant Hardware Layout Worksheet.

Copyright National Fire Protection Association
Provided by IHS under license with NFPA
No reproduction or networking permitted without license from IHS
Not for Resale

Table I.1(a) Normal Atmospheric Pressure at Different Elevations

Elevation (ft)	Normal Atmospheric Pressure, Absolute (psi)
0	14.70
1,000	14.20
2,000	13.70
3,000	13.20
4,000	12.70
5,000	12.20
6,000	11.80
7,000	11.30
8,000	10.90
9,000	10.50
10,000	10.05
11,000	9.70
12,000	9.35

For SI units, 1 ft = 0.305 m; 1 psi = 6.895 kPa.

Table I.1(b) Vapor Pressure for Water

Water Temperature		Vapor Pressure (psi)
°F	°C	
32	0.0	0.089
50	10.0	0.180
60	15.6	0.260
65	18.3	0.310
70	21.1	0.360
75	23.9	0.430
80	26.7	0.520

For SI units, 1 psi = 6.895 kPa.

Table I.1(c) Straight Pipe Equivalents for Fittings (ft)

	Pipe Diameter (in.)			
Fitting	6	8	10	12
45-degree elbow	10.49	12.08	15.05	18.01
90-degree elbow standard	18.92	26.90	33.06	40.58
90-degree elbow long sweep	13.57	19.61	24.05	27.13
Tee (cross) flow turned 90 degrees	30.10	52.67	75.24	90.29
Gate valve	4.56	6.04	7.52	9.01
Butterfly valve	15.10	18.10	28.61	31.58
Swing check valve	48.11	66.58	82.77	97.18

For SI units, 1 in. = 25.4 mm; 1 ft = 0.305 m.
Note : Coefficient (C) = 150.

Table I.1(d) Coefficient (C) Values for New Pipe

Pipe Material	C	Conversion Factor to C = 150
Cast iron, unlined	120	1.5
Cast iron, cement-lined	140	1.14
Cast iron, bitumastic enamel-lined	140	1.14
Average steel, new	140	1.14
Reinforced concrete	140	1.14
Plastic (PVC)	150	1.0

Table I.1(e) Friction Loss Per Foot of Pipe (psi)

	Pipe Diameter (in.)			
gpm	6	8	10	12
500	0.0086	0.0021	—	—
600	0.0122	0.0029	—	—
650	0.0141	0.0033	—	—
700	0.0162	0.0038	—	—
750	0.0184	0.0043	—	—
800	0.0207	0.0049	0.0017	—
850	0.0231	0.0055	0.0018	—
900	0.0258	0.0060	0.0020	—
950	0.0283	0.0066	0.0023	—
1000	0.0312	0.0073	0.0025	—
1050	0.0342	0.0080	0.0027	—
1100	0.0373	0.0088	0.0032	—
1200	0.0438	0.0102	0.0035	—
1250	0.0472	0.0111	0.0038	—
1300	0.0508	0.0119	0.0041	0.0017
1400	0.0583	0.0137	0.0047	0.0019
1500	0.0662	0.0157	0.0054	0.0022
1600	0.0757	0.0174	0.0060	0.0025
1700	0.0834	0.0195	0.0069	0.0027
1750	0.0880	0.0212	0.0071	0.0030
1800	0.0928	0.0218	0.0074	0.0031
1900	0.1015	0.0241	0.0082	0.0034
2000	0.1094	0.0265	0.0091	0.0038

For SI units, 1 in. = 25.4 mm; 1 ft = 0.305 m; 1 gpm = 3.785 L/min; 1 psi = 6.895 kPa.
Note: Coefficient (C) = 150.

Copyright National Fire Protection Association
Provided by IHS under license with NFPA
No reproduction or networking permitted without license from IHS
Not for Resale

Table I.1(f) Pressure Loss Due to Sudden Reduction (psi)

	Flow (gpm)*						
Reduction	**500**	**750**	**1000**	**1250**	**1500**	**1750**	**2000**
6 in. × 5 in.	0.03	0.08	0.15	0.25	0.40	0.55	0.76
6 in. × 4½ in.	0.09	0.20	0.37	0.63	0.90	1.30	1.70
6 in. × 4 in.	0.25	0.44	1.0	1.53	2.2	2.39	—
Bell Reducers†							
8 in. × 6 in.	0.03	0.06	0.12	0.18	0.26	0.36	0.50
10 in. × 6 in.	0.07	0.14	0.26	0.40	0.57	0.76	0.99
12 in. × 6 in.	0.08	0.18	0.31	0.47	0.67	0.89	1.15

For SI units, 1 in. = 25.4 mm; 1 gpm = 3.785 L/min; 1 psi = 6.895 kPa.
*Interpolate for other gpm flows.
†Used when dry hydrant system has two different diameter pipe sizes.
Note: Coefficient (C) = 150.

Table I.1(g) Velocity Head in Suction Pipe (psi)

	Pipe Diameter (in.)			
gpm	**6**	**8**	**10**	**12**
500	0.22	0.07	0.03	0.014
600	0.31	0.10	0.04	0.020
700	0.43	0.14	0.06	0.027
750	0.49	0.15	0.06	0.031
800	0.56	0.18	0.07	0.035
900	0.70	0.22	0.09	0.044
1000	0.87	0.28	0.11	0.054
1250	1.36	0.43	0.18	0.085
1500	1.95	0.62	0.25	0.122
1750	2.66	0.84	0.34	0.166
2000	3.47	1.10	0.45	0.217

For SI units, 1 in. = 25.4 mm; 1 gpm = 3.785 L/min; 1 psi = 6.895 kPa.

Table I.1(h) Pressure Loss in Suction Hose (psi/10 ft of Hose)

	Hose Size (in.)					
gpm	**2½**	**3**	**4**	**4½**	**5**	**6**
500	4.23	2.08	0.49	0.27	0.16	0.065
600	6.08	2.99	0.71	0.39	0.23	0.094
700	8.28	4.07	0.97	0.53	0.31	0.127
750	9.51	4.67	1.11	0.61	0.36	0.146
800	10.82	5.31	1.26	0.70	0.41	0.166
900	—	6.72	1.60	0.88	0.52	0.211
1000	—	8.30	1.97	1.09	0.64	0.260
1250	—	12.97	3.08	1.70	1.00	0.406
1500	—	—	4.43	2.45	1.44	0.585
1750	—	—	6.03	3.34	1.96	0.796
2000	—	—	7.88	4.36	2.56	1.04

For SI units, 1 in. = 25.4 mm; 1 ft = 0.305 m; 1 gpm = 3.785 L/min.

Annex J Informational References

J.1 Referenced Publications. The documents or portions thereof listed in this annex are referenced within the informational sections of this standard and are not part of the requirements of this document unless also listed in Chapter 2 for other reasons.

J.1.1 NFPA Publications. National Fire Protection Association, 1 Batterymarch Park, Quincy, MA 02169-7471.

NFPA 1, *Uniform Fire Code*™, 2006 edition.

NFPA 11, *Standard for Low-, Medium-, and High-Expansion Foam*, 2005 edition.

NFPA 13, *Standard for the Installation of Sprinkler Systems*, 2007 edition.

NFPA 13D, *Standard for the Installation of Sprinkler Systems in One- and Two-Family Dwellings and Manufactured Homes*, 2007 edition.

NFPA 13E, *Recommended Practice for Fire Department Operations in Properties Protected by Sprinkler and Standpipe Systems*, 2005 edition.

NFPA 13R, *Standard for the Installation of Sprinkler Systems in Residential Occupancies up to and Including Four Stories in Height*, 2007 edition.

NFPA 15, *Standard for Water Spray Fixed Systems for Fire Protection*, 2007 edition.

NFPA 16, *Standard for the Installation of Foam-Water Sprinkler and Foam-Water Spray Systems*, 2003 edition.

NFPA 20, *Standard for the Installation of Stationary Pumps for Fire Protection*, 2007 edition.

NFPA 22, *Standard for Water Tanks for Private Fire Protection*, 2003 edition.

NFPA 220, *Standard on Types of Building Construction*, 2006 edition.

NFPA 1002, *Standard for Fire Apparatus Driver/Operator Professional Qualifications*, 2003 edition.

NFPA 1451, *Standard for a Fire Service Vehicle Operations Training Program*, 2002 edition.

NFPA 1901, *Standard for Automotive Fire Apparatus*, 2003 edition.

NFPA *Fire Protection Handbook*, 19th edition, 2003.

--`,,```,,,,````-`-`,,`,,`,`,,`---
Copyright National Fire Protection Association
Provided by IHS under license with NFPA
No reproduction or networking permitted without license from IHS
Not for Resale

J.1.2 Other Publications.

J.1.2.1 ACI Publications. American Concrete Institute, P.O. Box 9094, Farmington Hills, MI 48333.

J.1.2.2 ASTM Publications. ASTM International, 100 Barr Harbor Drive, P.O. Box C700, West Conshohocken, PA 19428-2959.

ASTM D 1557, *Standard Test Methods for Laboratory Compaction Characteristics of Soil Using Modified Effort [56,000 ft-lbf/ft^3 (2,700 kN-m/m^3)]*, 2002.

J.1.2.3 NASF Publications. National Association of State Foresters, 444 North Capital Street NW, Suite 540, Washington, DC 20001.

www.stateforesters.org

J.1.2.4 NDMC Publications. National Drought Mitigation Center, University of Nebraska-Lincoln, 239 LW. Chase Hall, P.O. Box 830749, Lincoln, NE 68583-0749.

The National Drought Mitigation Center Directory of Drought Contacts, 2006.

Available online at: www.drought.unl.edu./contact/contact.htm

J.1.2.5 U.S. Government Publications.

J.1.2.5.1 NRCS Publications. Natural Resources Conservation Service, 4th and Independence Avenue SW, Washington, DC 20250.

Conservation Practice Standard Dry Hydrant Code 432, 1999.

Available online at: http://www.nrcs.usda.gov/Technical/Standards/nhcp.html

J.1.2.5.2 USDA Forest Service Publications.

www.fs.fed.us/fire

J.1.2.5.3 USGS Publications.

U.S. Geological Survey (USGS) Water Resources Information.

Available online at: http:www.usgs.gov/ask/index.html (alt)

J.2 Informational References. The following documents or portions thereof are listed here as informational resources only. They are not a part of the requirements of this document.

J.2.1 NFPA Publications. National Fire Protection Association, 1 Batterymarch Park, Quincy, MA 02169-7471.

NFPA 1961, *Standard on Fire Hose*, 2002 edition.

NFPA 1962, *Standard for the Inspection, Care, and Use of Fire Hose, Couplings, and Nozzles and the Service Testing of Fire Hose*, 2003 edition.

NFPA 1963, *Standard for Fire Hose Connections*, 2003 edition.

J.2.2 Other Publications.

Handbook of PVC Pipe, Design and Construction, Fourth Edition, 2001. The Uni-Bell PVC Pipe Association, Dallas, TX, 75234.

J.2.3 Other Resources.

J.2.3.1 Firewise Resources.

Using Water Effectively in the Wildland/Urban Interface (DVD or Video), 2004.

Operation Water: Planning for Water Supply & Distribution (Video), 1993.

Available only through online catalog at https://www.cmsassociates.com/firewise.nsf/avcatalog?open.

J.2.3.2 Wisconsin DNR Publications. Wisconsin Department of Natural Resources, 101 South Webster Street, P.O. Box 7921, Madison, WI 53707-7921.

A Guide to Planning and Installing Dry Fire Hydrants, 2003.

J.3 References for Extracts in Informational Sections. (Reserved)

Copyright National Fire Protection Association
Provided by IHS under license with NFPA
No reproduction or networking permitted without license from IHS
Not for Resale

Index

Copyright © 2006 National Fire Protection Association. All Rights Reserved.

The copyright in this index is separate and distinct from the copyright in the document that it indexes. The licensing provisions set forth for the document are not applicable to this index. This index may not be reproduced in whole or in part by any means without the express written permission of NFPA.

-A-

Access to water supplies 7.5, A.7.5, A.8.8
Streams B.3.1
Swimming pools B.6.1
Adequate and reliable water supply .....*see* Water supply
Alternative water supply ..... 7.1.3, Annex B
Access to .....*see* Access to water supplies
Approval of 7.1, A.7.1.1, A.7.1.5
Cisterns B.4, C.1
Connections at 7.4
Definition 3.3.1
Dry hydrants .....*see* Dry hydrants
Fire department connections 7.4
Identification of 7.3, B.2
Livestock watering ponds and tanks B.7
Natural B.3
Ponds .....*see* Ponds
Private sources, water use agreements for 7.2, A.7.2
Private water sources, water use agreements for 7.2, A.7.2
Sprinkler system, water stored for B.8
Streams A.7.1.5, B.3.1, C.12.2.3
Swimming pools B.6, C.1, C.12.2.3
Transport of ..... 7.1.3, B.1(2); *see also* Mobile water supply apparatus
Underground tank, fiberglass B.5
Wells B.9
Application of standard 1.3
Approved/approval
Definition 3.2.1, A.3.2.1
Of water source 7.1, A.7.1.1, A.7.1.5
Authority having jurisdiction (definition) 3.2.2, A.3.2.2
Automatic aid (definition) 3.3.2

-B-

Beams, Type IV construction 6.3.6.2, 6.3.6.6
Booster tanks E.6.5
Buildings .....*see also* Structures
Definition 3.3.3
Sprinkler protection of .....*see* Sprinkler systems
Building surveys A.4.1.2, A.4.1.3

-C-

Calculations
Minimum water supply ..... Chap. 4
Commercial structures H.2.2, H.3.2
Fire scene, water delivery rate to 4.6
Multiple structures H.2.3
Other automatic suppression systems, structures with 4.5
Precalculated water supply A.4.2.1, H.2.5
Residential structures H.2.1, H.3.1
Sprinkler systems, structures with 4.4, A.4.4
Structures with exposure hazards 4.3, A.4.3.1, H.3
Structures without exposure hazards 4.2, A.4.2.1
Mobile water supply apparatus, water-carrying potential of C.11
Municipal-type water system G.4
Dwellings, fire flow for G.4.4.5
Examples G.5
Swimming pool capacity B.6.2
Centrifugal pumps E.5.1, E.5.2
Cisterns B.4, C.1
Capacity, guide to B.4.4
Construction of B.4.2
Specifications B.4.3
Classification numbers .....*see* Construction classification numbers; Occupancy hazard classification numbers
Classification of construction ..... Chap. 6.
Columns, Type IV construction 6.3.6.5.1
Communications factor, municipal-type water system requirement G.3.4, G.4.3
Construction classification numbers 6.2, A.6.2
Definition 3.3.4
Determination of 6.1
Construction types
Municipal-type water system G.3.1, G.4.1
Predominant type, determination of G.4.1.1
Type II (222, 111, or 000) .... Table 6.3.1, 6.3.4, A.6.3.1, G.4.1.1.2
Type III (211 or 200) ..... Table 6.3.1, 6.3.5, A.6.3.1, G.4.1.1.3
Type I (442 or 332) ..... Table 6.3.1, 6.3.3, A.6.3.1, G.4.1.1.1
Type IV (2HH) ..... Table 6.3.1, 6.3.6, A.6.3.1, G.4.1.1.2
Type V (111 or 000) ..... Table 6.3.1, 6.3.7, A.6.3.1

-D-

Definitions ..... Chap. 3
Domestic water supply A.1.2
Driven wells B.9
Drop tanks, portable C.14, C.15
Dry hydrants ..... 7.1.4, Chap. 8, C.1
Access to hydrant and to water sources 8.4.2, 8.4.5, A.8.4.2
Cisterns, used with B.4.1
Definition 3.3.5
Depth of water sources 8.5, A.8.5
Design and location ..... 8.3, 8.4, A.8.3, A.8.4, Annex I
Inspection and maintenance 8.7, A.8.7.1, A.8.7.5
Installation 8.6, A.8.6
Planning and permits 8.2, A.8.2.2
Records 8.8, A.8.8
Dwelling
Definition 3.3.6
Maximum construction classification number 6.2.2
Municipal-type water system, fire flow from G.4.4.5
Dwelling unit (definition) 3.3.7

-E-

Equivalency to standard 1.4
Exposure hazards
Definition 3.3.8, A.3.3.8
Municipal-type water system, exposure factor G.3.4
Secondary water supply, exposure factor G.4.3

-F-

Fire department
Connections 7.4, F.3.3
Definition 3.3.9, A.3.3.9
Sprinkler systems and F.3
Fire fighting, sprinkler water supply used for other B.8
Fire hydrants .....*see* Hydrants
Fire resistance ratings ..... Table 6.3.1, 6.3.3.2, 6.3.4.2, 6.3.5, 6.3.6.2, 6.3.7
Fire resistive construction A.6.2, G.4.1.1.1
Fire scene
Water delivery rate to 4.6

Copyright National Fire Protection Association
Provided by IHS under license with NFPA
No reproduction or networking permitted without license from IHS
Not for Resale

Water supplies at or near ..... 7.1.3, B.1(1)
Fire suppression systems, minimum water supply for structures with ..... 4.4, 4.5, A.4.4; *see also* Sprinkler systems
Floating pumps E.5.3
Floors, Type IV construction 6.3.6.9
Frame construction .....*see* Wood frame construction

-H-

Hauling water .....*see* Mobile water supply apparatus
High hazard occupancies 5.2.2, A.5.2.2.1
High-lift pumps E.5.4
Hose .....*see* Large diameter hose
Hydrants ..... A.1.2, B.1; *see also* Dry hydrants
Design G.7.2
Distribution G.7.1
Sprinkler system water supply, connection to B.8
Well B.9

-I-

Identification of water supplies 7.3
Irrigation piping D.5.7

-L-

Large-diameter hose ..... B.1(3), Annex D
Air bleeder D.5.6
Carrying capacity D.2.1
Characteristics D.2
Clappered siamese with indicator D.5.1
Definition 3.3.10, A.3.3.10
Distributor valve D.5.4
Fittings D.5
Hydrant valve, four-way D.5.3
Intake gated relief valve D.5.5
Irrigation piping D.5.7
Line relay valve D.5.2
Load capacity D.3
Powered reel trucks for D.4
Selecting D.2.2
Lift A.8.3.3
Definition 3.3.11
High-lift pumps E.5.4
Light hazard occupancy classification numbers 5.2.5
Limited-combustible materials 6.3.3.1, 6.3.4.1, 6.3.5, 6.3.6.1
Livestock watering ponds and tanks B.7
Low hazard occupancy classification numbers 5.2.4

-M-

Minimum water supply
Definition 3.3.12
For structures .....*see* Structures
Mobile water supply apparatus ..... A.7.5(8), B.4.1, Annex C
Air pressurization/vacuum operations, equipped for C.12.3
Calculation of water-carrying potential C.11
Capacity C.4
Definition 3.3.13
Driver training C.10
Dump valves
Jet-assisted dumps C.12.2
Large gravity dumps C.12.1
Testing capacity of C.13
Filling and discharging C.12
Fill line couplings C.6.1
Modification of nonwater tankers for use as C.9
Plumbing C.6
Portable drop tanks C.14, C.15
Portable pumps used with .....*see* Pumps, portable
Regulations and restrictions C.3
Specifications for C.2
Tank baffles C.5
Turning radius and wheelbase C.8
Weight distribution C.7, C.9
Moderate hazard occupancies 5.2.3
Moving water by mobile water supply .....*see* Mobile water supply apparatus
Municipal-type water system ..... 7.1.3, Annex G
Calculations, fire flow G.4
For dwellings G.4.5.5
Examples G.5
Definition 3.3.14
Determination of need for G.2
Duration, fire flow G.6
Fire hydrants G.2, G.7
Procedure for developing requirement G.3
Mutual aid agreement (definition) 3.3.15, A.3.3.15

-N-

Natural water sources B.3
Noncombustible construction G.4.1.1.2
Noncombustible materials 6.3.3.1, 6.3.4.1, 6.3.5

-O-

Occupancy hazard, classification of ..... Chap. 5; *see also* Occupancy hazard classification numbers
Municipal-type water system requirement, occupancy factor in G.3.3, G.4.2
Occupancy hazard classification numbers 5.2, A.5.2
Classification 3 ..... 5.2.1, A.5.2.1.1
Classification 4 ..... 5.2.2, A.5.2.2.1
Classification 5 ..... 5.2.3
Classification 6 ..... 5.2.4
Classification 7 ..... 5.2.5
Definition 3.3.16
Ordinary construction G.4.1.1.3

-P-

Permits 8.2, A.8.2.2
Piping, irrigation D.5.7
Plans
Dry hydrants 8.2
Prefire B.10
Ponds A.8.7.1, B.3.2, B.7, C.12.2.3
Pools .....*see* Swimming pools
Portable pumps .....*see* Pumps, portable
Prefire plans B.10
Private water sources, water use agreements for 7.2, A.7.2
Pumpers .....*see* Mobile water supply apparatus
Pumps, portable ..... A.8.3.3, A.8.5, Annex E
Classification E.4
Description of E.2
Evaluation of needs E.3
Large volume-relatively low pressure E.4.3
Medium volume-medium pressure E.4.2
Methods of using E.6
Mobile water supply apparatus, use with C.6, E.6
Small volume-relatively high pressure E.4.1
Types of E.4, E.5
Purpose of standard 1.2, A.1.2

-R-

Records .....*see* Reports and records
Reducer (definition) 3.3.17
References ..... Chap. 2, Annex J
Reliable water supply .....*see* Water supply
Reports and records
Dry hydrant maintenance 8.8, A.8.8
Water supply 7.8

--`,,```,,,,````-`-`,,`,,`,`,,`---
Copyright National Fire Protection Association
Provided by IHS under license with NFPA
No reproduction or networking permitted without license from IHS
Not for Resale

Roof decks, Type IV construction 6.3.6.10
Rural (definition) 3.3.18

-S-

Scope of standard 1.1
Severe hazard occupancies 5.2.1, A.5.2.1.1
Shall (definition) 3.2.3
Should (definition) 3.2.4
Splice plates, Type IV construction 6.3.6.8
Sprinkler systems ..... Annex F
Fire department connection, use of F.3.3
Shutting off after fire F.3.4
Water supply F.2
Fire department and F.3
Minimum supply 4.4, A.4.4
Municipal-type water system, fire flow from G.4.4.4
Use of sprinkler water supply for other fire fighting B.8
Standard (definition) 3.2.5
Streams A.7.1.5, B.3.1, C.12.2.3
Structures
Definition 3.3.19
Minimum water supply
Calculations ..... *see* Calculations
Commercial structures H.2.2, H.3.2
With exposure hazards 4.3, A.4.3.1, H.3
Multiple structures H.2.3
Other automatic suppression systems, structures with 4.5
Residential structures H.2.1, H.3.1
Sprinkler systems, structures with 4.4, A.4.4
Without exposure hazards 4.2, A.4.2.1, H.2
Suburb or suburban (definition) 3.3.20, A.3.3.20
Swimming pools B.6, C.1, C.12.2.3
Accessibility B.6.1
Capacity, calculating B.6.2
Care in use of B.6.3

-T-

Tank baffles C.5
Tankers ..... *see* Mobile water supply apparatus
Tanks
Booster E.6.5
Drop, portable C.14, C.15
Livestock watering B.7
Underground, fiberglass B.5
Tenders ..... *see* Mobile water supply apparatus
Transported water supplies ..... 7.1.3, B.1(2)

-V-

Valves, large-diameter hose ..... D.5.2 to D.5.5

-W-

Water delivery rate ..... C.11 to C.13, D.2
Definition 3.3.21
Water supply
Alternative ..... *see* Alternative water supply
Minimum ..... *see* Minimum water supply
Municipal ..... *see* Municipal-type water system
Other uses 4.7
Water supply officer (WSO) A.8.5, C.15
Definition 3.3.22, A.3.3.22
Water tender ..... *see* Mobile water supply apparatus
Water use agreements 7.2, A.7.2
Wells, driven B.9
Wood frame construction G.4.1.1.4
Wood shake shingles G.4.4.1

Copyright National Fire Protection Association
Provided by IHS under license with NFPA
No reproduction or networking permitted without license from IHS
Not for Resale

Sequence of Events Leading to Issuance of an NFPA Committee Document

Step 1: Call for Proposals

- Proposed new Document or new edition of an existing Document is entered into one of two yearly revision cycles, and a Call for Proposals is published.

Step 2: Report on Proposals (ROP)

- Committee meets to act on Proposals, to develop its own Proposals, and to prepare its Report.
- Committee votes by written ballot on Proposals. If two-thirds approve, Report goes forward. Lacking two-thirds approval, Report returns to Committee.
- Report on Proposals (ROP) is published for public review and comment.

Step 3: Report on Comments (ROC)

- Committee meets to act on Public Comments to develop its own Comments, and to prepare its report.
- Committee votes by written ballot on Comments. If two-thirds approve, Report goes forward. Lacking two-thirds approval, Report returns to Committee.
- Report on Comments (ROC) is published for public review.

Step 4: Technical Report Session

- "*Notices of intent to make a motion"* are filed, are reviewed, and valid motions are certified for presentation at the Technical Report Session. ("Consent Documents" that have no certified motions bypass the Technical Report Session and proceed to the Standards Council for issuance.)
- NFPA membership meets each June at the Annual Meeting Technical Report Session and acts on Technical Committee Reports (ROP and ROC) for Documents with "certified amending motions."
- Committee(s) vote on any amendments to Report approved at NFPA Annual Membership Meeting.

Step 5: Standards Council Issuance

- Notification of intent to file an appeal to the Standards Council on Association action must be filed within 20 days of the NFPA Annual Membership Meeting.
- Standards Council decides, based on all evidence, whether or not to issue Document or to take other action, including hearing any appeals.

Committee Membership Classifications

The following classifications apply to Technical Committee members and represent their principal interest in the activity of the committee.

M *Manufacturer:* A representative of a maker or marketer of a product, assembly, or system, or portion thereof, that is affected by the standard.

U *User:* A representative of an entity that is subject to the provisions of the standard or that voluntarily uses the standard.

I/M *Installer/Maintainer:* A representative of an entity that is in the business of installing or maintaining a product, assembly, or system affected by the standard.

L *Labor:* A labor representative or employee concerned with safety in the workplace.

R/T *Applied Research/Testing Laboratory:* A representative of an independent testing laboratory or independent applied research organization that promulgates and/or enforces standards.

E *Enforcing Authority:* A representative of an agency or an organization that promulgates and/or enforces standards.

I *Insurance:* A representative of an insurance company, broker, agent, bureau, or inspection agency.

C *Consumer:* A person who is, or represents, the ultimate purchaser of a product, system, or service affected by the standard, but who is not included in the *User* classification.

SE *Special Expert:* A person not representing any of the previous classifications, but who has a special expertise in the scope of the standard or portion thereof.

NOTES;
1. "Standard" connotes code, standard, recommended practice, or guide.
2. A representative includes an employee.
3. While these classifications will be used by the Standards Council to achieve a balance for Technical Committees, the Standards Council may determine that new classifications of members or unique interests need representation in order to foster the best possible committee deliberations on any project. In this connection, the Standards Council may make appointments as it deems appropriate in the public interest, such as the classification of "Utilities" in the National Electrical Code Committee.
4. Representatives of subsidiaries of any group are generally considered to have the same classification as the parent organization.

Copyright National Fire Protection Association
Provided by IHS under license with NFPA
No reproduction or networking permitted without license from IHS
Not for Resale

NFPA Technical Committee Document Proposal Form

NOTE: All Proposals must be received by 5:00 p.m. EST/EDST on the published Proposal Closing Date.

For further information on the standards-making process, please contact the Codes and Standards Administration at 617-984-7249.

For technical assistance, please call NFPA at 617-770-3000.

FOR OFFICE USE ONLY

Log #:

Date Rec'd:

Please indicate in which format you wish to receive your ROP/ROC ☐ **electronic** ☐ **paper** ☒ **download**
(Note: If choosing the download option, you must view the ROP/ROC from our website; no copy will be sent to you.)

Date April 1, 200X **Name** John J. Doe **Tel. No.** 716-555-1234

Company Air Canada Pilot's Association

Street Address 123 Summer Street Lane **City** Lewiston **State** NY **Zip** 14092

Please indicate organization represented (if any)

1. (a) NFPA Document Title National Fuel Gas Code **NFPA No. & Year** 54, 200X Edition

(**b) Section/Paragraph** 3.3

2. Proposal Recommends (check one): ☐ new text ☒ revised text ☐ deleted text

3. Proposal (include proposed new or revised wording, or identification of wording to be deleted): [Note: Proposed text should be in legislative format, i.e., use underscore to denote wording to be inserted (inserted wording) and strike-through to denote wording to be deleted (~~deleted wording~~).]

Revise definition of effective ground-fault current path to read:

3.3.78 Effective Ground-Fault Current Path. An intentionally constructed, permanent, low impedance electrically conductive path designed and intended to carry ~~underground~~ electric fault current ~~conditions~~ from the point of a ground fault on a wiring system to the electrical supply source.

4. Statement of Problem and Substantiation for Proposal: (Note: State the problem that would be resolved by your recommendation; give the specific reason for your Proposal, including copies of tests, research papers, fire experience, etc. If more than 200 words, it may be abstracted for publication.)

Change uses proper electrical terms.

5. Copyright Assignment

(a) ☐ **I am the author of the text or other material (such as illustrations, graphs) proposed in this Proposal.**

(b) ☒ **Some or all of the text or other material proposed in this Proposal was not authored by me. Its source is as follows** (please identify which material and provide complete information on its source)**:**

ABC Co.

I hereby grant and assign to NFPA all and full rights in copyright in this Proposal and understand that I acquire no rights in any publication of NFPA in which this Proposal in this or another similar or analogous form is used. Except to the extent that I do not have authority to make an assignment in materials that I have identified in (b) above, I hereby warrant that I am the author of this Proposal and that I have full power and authority to enter into this assignment.

Signature (Required)

PLEASE USE SEPARATE FORM FOR EACH PROPOSAL • NFPA Fax: (617) 770-3500
Mail to: Secretary, Standards Council, National Fire Protection Association, 1 Batterymarch Park, Quincy, MA 02169-7471

8/29/2006

SAMPLE

Copyright National Fire Protection Association
Provided by IHS under license with NFPA
No reproduction or networking permitted without license from IHS
Not for Resale

NFPA Technical Committee Document Proposal Form

NOTE: All Proposals must be received by 5:00 p.m. EST/EDST on the published Proposal Closing Date.

For further information on the standards-making process, please contact the Codes and Standards Administration at 617-984-7249.

For technical assistance, please call NFPA at 617-770-3000.

FOR OFFICE USE ONLY

Log #: _____

Date Rec'd: _____

Please indicate in which format you wish to receive your ROP/ROC ☐ electronic ☐ paper ☐ download
(Note: If choosing the download option, you must view the ROP/ROC from our website; no copy will be sent to you.)

Date _____ **Name** _____ **Tel. No.** _____

Company _____

Street Address _____ **City** _____ **State** _____ **Zip** _____

Please indicate organization represented (if any) _____

1. (a) NFPA Document Title _____ **NFPA No. & Year** _____

(**b) Section/Paragraph** _____

2. Proposal Recommends (check one): ☐ new text ☐ revised text ☐ deleted text

3. Proposal (include proposed new or revised wording, or identification of wording to be deleted): [Note: Proposed text should be in legislative format, i.e., use underscore to denote wording to be inserted (inserted wording) and strike-through to denote wording to be deleted (~~deleted wording~~).]

4. Statement of Problem and Substantiation for Proposal: (Note: State the problem that would be resolved by your recommendation; give the specific reason for your Proposal, including copies of tests, research papers, fire experience, etc. If more than 200 words, it may be abstracted for publication.)

5. Copyright Assignment

(a) ☐ I am the author of the text or other material (such as illustrations, graphs) proposed in this Proposal.

(b) ☐ Some or all of the text or other material proposed in this Proposal was not authored by me. Its source is as follows (please identify which material and provide complete information on its source)**:**

_____

I hereby grant and assign to NFPA all and full rights in copyright in this Proposal and understand that I acquire no rights in any publication of NFPA in which this Proposal in this or another similar or analogous form is used. Except to the extent that I do not have authority to make an assignment in materials that I have identified in (b) above, I hereby warrant that I am the author of this Proposal and that I have full power and authority to enter into this assignment.

Signature (Required) _____

PLEASE USE SEPARATE FORM FOR EACH PROPOSAL • NFPA Fax: (617) 770-3500

Mail to: Secretary, Standards Council, National Fire Protection Association, 1 Batterymarch Park, Quincy, MA 02169-7471

8/29/2006

--`,,```,,,,````-`-`,,`,,`,`,,`---

Copyright National Fire Protection Association
Provided by IHS under license with NFPA
No reproduction or networking permitted without license from IHS

Not for Resale