NFPA 1126

Standard for the Use of Pyrotechnics Before a Proximate Audience

2006 Edition



NFPA, 1 Batterymarch Park, Quincy, MA 02169-7471
An International Codes and Standards Organization

--`,,```,,-`-`,,`,,`,`,,`---

Copyright National Fire Protection Association
Provided by IHS under license with NFPA
No reproduction or networking permitted without license from IHS

Not for Resale

IMPORTANT NOTICES AND DISCLAIMERS CONCERNING NFPA DOCUMENTS

NOTICE AND DISCLAIMER OF LIABILITY CONCERNING THE USE OF NFPA DOCUMENTS

NFPA codes, standards, recommended practices, and guides, of which the document contained herein is one, are developed through a consensus standards development process approved by the American National Standards Institute. This process brings together volunteers representing varied viewpoints and interests to achieve consensus on fire and other safety issues. While the NFPA administers the process and establishes rules to promote fairness in the development of consensus, it does not independently test, evaluate, or verify the accuracy of any information or the soundness of any judgments contained in its codes and standards.

The NFPA disclaims liability for any personal injury, property or other damages of any nature whatsoever, whether special, indirect, consequential or compensatory, directly or indirectly resulting from the publication, use of, or reliance on this document. The NFPA also makes no guaranty or warranty as to the accuracy or completeness of any information published herein.

In issuing and making this document available, the NFPA is not undertaking to render professional or other services for or on behalf of any person or entity. Nor is the NFPA undertaking to perform any duty owed by any person or entity to someone else. Anyone using this document should rely on his or her own independent judgment or, as appropriate, seek the advice of a competent professional in determining the exercise of reasonable care in any given circumstances.

The NFPA has no power, nor does it undertake, to police or enforce compliance with the contents of this document. Nor does the NFPA list, certify, test or inspect products, designs, or installations for compliance with this document. Any certification or other statement of compliance with the requirements of this document shall not be attributable to the NFPA and is solely the responsibility of the certifier or maker of the statement.

--`,,```,,,-`-`,,`,,`,`,,`---

Copyright National Fire Protection Association
Provided by IHS under license with NFPA
No reproduction or networking permitted without license from IHS

Not for Resale

ADDITIONAL NOTICES AND DISCLAIMERS

Updating of NFPA Documents

Users of NFPA codes, standards, recommended practices, and guides should be aware that these documents may be superseded at any time by the issuance of new editions or may be amended from time to time through the issuance of Tentative Interim Amendments. An official NFPA document at any point in time consists of the current edition of the document together with any Tentative Interim Amendments and any Errata then in effect. In order to determine whether a given document is the current edition and whether it has been amended through the issuance of Tentative Interim Amendments or corrected through the issuance of Errata, consult appropriate NFPA publications such as the National Fire Codes® Subscription Service, visit the NFPA website at www.nfpa.org, or contact the NFPA at the address listed below.

Interpretations of NFPA Documents

A statement, written or oral, that is not processed in accordance with Section 6 of the Regulations Governing Committee Projects shall not be considered the official position of NFPA or any of its Committees and shall not be considered to be, nor be relied upon as, a Formal Interpretation.

Patents

The NFPA does not take any position with respect to the validity of any patent rights asserted in connection with any items which are mentioned in or are the subject of NFPA codes, standards, recommended practices, and guides, and the NFPA disclaims liability for the infringement of any patent resulting from the use of or reliance on these documents. Users of these documents are expressly advised that determination of the validity of any such patent rights, and the risk of infringement of such rights, is entirely their own responsibility.

NFPA adheres to applicable policies of the American National Standards Institute with respect to patents. For further information contact the NFPA at the address listed below.

Law and Regulations

Users of these documents should consult applicable federal, state, and local laws and regulations. NFPA does not, by the publication of its codes, standards, recommended practices, and guides, intend to urge action that is not in compliance with applicable laws, and these documents may not be construed as doing so.

Copyrights

This document is copyrighted by the NFPA. It is made available for a wide variety of both public and private uses. These include both use, by reference, in laws and regulations, and use in private self-regulation, standardization, and the promotion of safe practices and methods. By making this document available for use and adoption by public authorities and private users, the NFPA does not waive any rights in copyright to this document.

Use of NFPA documents for regulatory purposes should be accomplished through adoption by reference. The term "adoption by reference" means the citing of title, edition, and publishing information only. Any deletions, additions, and changes desired by the adopting authority should be noted separately in the adopting instrument. In order to assist NFPA in following the uses made of its documents, adopting authorities are requested to notify the NFPA (Attention: Secretary, Standards Council) in writing of such use. For technical assistance and questions concerning adoption of NFPA documents, contact NFPA at the address below.

For Further Information

All questions or other communications relating to NFPA codes, standards, recommended practices, and guides and all requests for information on NFPA procedures governing its codes and standards development process, including information on the procedures for requesting Formal Interpretations, for proposing Tentative Interim Amendments, and for proposing revisions to NFPA documents during regular revision cycles, should be sent to NFPA headquarters, addressed to the attention of the Secretary, Standards Council, NFPA, 1 Batterymarch Park, P.O. Box 9101, Quincy, MA 02269-9101.

For more information about NFPA, visit the NFPA website at www.nfpa.org.

Copyright National Fire Protection Association
Provided by IHS under license with NFPA
No reproduction or networking permitted without license from IHS
Not for Resale

Copyright © 2005, National Fire Protection Association, All Rights Reserved

NFPA 1126

Standard for the

Use of Pyrotechnics Before a Proximate Audience

2006 Edition

This edition of NFPA 1126, *Standard for the Use of Pyrotechnics Before a Proximate Audience*, was prepared by the Technical Committee on Special Effects and acted on by NFPA at its June Association Technical Meeting held June 6–10, 2005, in Las Vegas, NV. It was issued by the Standards Council on July 29, 2005, with an effective date of August 18, 2005, and supersedes all previous editions.

This edition of NFPA 1126 was approved as an American National Standard on August 18, 2005.

Origin and Development of NFPA 1126

The first edition of NFPA 1126, *Standard for the Use of Pyrotechnics Before a Proximate Audience*, was published in 1992. It was developed by the Pyrotechnics Committee in response to a recognized need for a document to provide guidance to public safety officials for the safe use of pyrotechnic special effects at both indoor and outdoor locations. The purpose of this standard is to provide requirements for reasonable protection for pyrotechnic operators, performers, support personnel, and proximate audiences where pyrotechnic special effects are used indoors and outdoors.

For the 1996 edition, several new definitions were added, including *producer* and *venue manager*, that related to requirements in Chapter 4 of the document. In Chapter 5, the requirements relating to labeling of pyrotechnic preloads were revised for clarity and conformance with the NFPA *Manual of Style*. Revisions to Chapter 6 regarding use of pyrotechnics incorporated the tentative interim amendment addressing measures to safeguard the safety of performers.

The 2001 edition represented the first edition completed by the Committee on Special Effects, which now has responsibility for both flame and pyrotechnic special effects before a proximate audience. The previous editions of NFPA 1126 were the responsibility of the Committee on Pyrotechnics, but when the flame special effects activity was initiated (NFPA 160, *Standard for Flame Effects Before an Audience*), NFPA 1126 was assigned to this new committee. The primary change accomplished with the 2001 revision was the harmonization of the requirements for consistency between both proximate audience documents, NFPA 160 and NFPA 1126, since many of the users are involved in both types of special effects.

The 2006 edition includes a complete revision of the standard with editorial changes in accordance with the *Manual of Style for NFPA Technical Committee Documents* and several key technical changes. The committee added new and revised existing definitions for consistency with the NFPA Glossary of Terms and with the other pyrotechnics documents. The standard has also been revised to include new requirements on operator licensing that make the document consistent with requirements for flame effect operators.

--`,,```,-`-`,,`,,`,`,,`---

Copyright National Fire Protection Association
Provided by IHS under license with NFPA
No reproduction or networking permitted without license from IHS

Not for Resale

Technical Committee on Special Effects

G. Clark Parkhurst, Jr., *Chair*
Bristol, CT [SE]

Edgar C. Buckingham, *Secretary*
Honeywell Inc., CA [M]

Robert Bauer, The Doyle Street Group, CA [IM]
Glenn A. Birket, Birket Engineering, Inc., FL [M]
Jose R. Colon, Connecticut Department of Public Safety, CT [E]
Rep. International Fire Marshals Association
Steve A. Coman, RES Specialty Pyrotechnics Inc., MN [M]
Rep. Pyrotechnics Guild International, Inc.
Ettore Contestabile, Natural Resources Canada, Canada [RT]
Randall W. A. Davidson, Risk International & Associates, Inc., CA [SE]
June M. Fields, Henderson, NV [SE]
Jon G. Fuller, Universal Studios, FL [U]
Steven A. Giovagnoli, GE Global Asset Protection Services, IL [I]
Reuben Goldberg, Technic Services, CA [U]
Rep. The Alliance of Special Effects & Pyrotechnic Operators, Inc.
Jeremiah Harris, Harris Production Services/PRG, NY [U]
Kenneth L. Kosanke, PyroLabs, Inc., CO [SE]
Joshua Lazarus, State of New Jersey, NJ [E]
Dave McCulloch, Natural Resources Canada, Canada [E]
Thaine Morris, MP Associates Inc., CA [M]
Andrew T. Nicholls, Orlando Special Effects, Inc., FL [M]
John T. Rodgers, John T. Rodgers, P.E., CA [M]
Monona Rossol, Arts, Crafts & Theater Safety, Inc., NY [SE]
R. Scott Schaffner, RADCO, CA [RT]
Larry Schoeneman, Interesting Products, IL [SE]
Rep. Entertainment Services and Technology Association (ESTA)
David S. Shatzer, U.S. Bureau of Alcohol, Tobacco, Firearms, and Explosives, DC [E]
James H. Stannard, Jr., Stannard & Company, GA [SE]
Martin E. Steinke, Busch Entertainment Corporation, FL [U]
Charles P. Weeth, Weeth & Associates, LLC, WI [SE]
Lawrence Weinman, Luna Tech/Schneier-Weinman Consultants, AL [M]
Tylor A. Wymer, WOW!Works, A Buckley/Wymer Company, FL [U]
William J. Young, Superior Energy Systems, Ltd., OH [M]
Rep. National Propane Gas Association

Alternates

Damon H. Andrew, Busch Entertainment Corporation, MO [U]
(Alt. to M. E. Steinke)
Gary R. Barnes, Universal Studios, FL [U]
(Alt. to J. G. Fuller)
Daniel Birket, Birket Engineering Inc., FL [M]
(Alt. to G. A. Birket)
Gregory V. Dumansky, GE Global Asset Protection Services, CA [I]
(Alt. to S. A. Giovagnoli)
Bonnie J. Kosanke, Journal of Pyrotechnics, Inc., CO [SE]
(Alt. to K. L. Kosanke)
Gregory Meeh, Jauchem & Meeh Inc., NY [U]
(Alt. to J. Harris)
Robert B. Nicholson III, Eastern Propane Corporation, NJ [M]
(Alt. to W. J. Young)
Mark C. Orellana, Penn Township, Indiana Fire Department, IN [E]
(Alt. to J. R. Colon)
David J. Pier, MP Associates Inc., CA [M]
(Alt. to T. Morris)
Elia P. Popov, J.E.M. F/X Inc., CA [M]
(Alt. to E. C. Buckingham)
Karl G. Ruling, Entertainment Services & Technology Association, NY [SE]
(Alt. to L. Schoeneman)
John R. Steinberg, Pyrotechnics Guild International, Inc., MD [M]
(Alt. to S. A. Coman)
Michael L. Zieman, RADCO, CA [RT]
(Alt. to R. S. Schaffner)

Nonvoting

Mark W. Hagemann, U.S. Department of Labor, DC [E]
Rep. Occupational Safety & Health Administration
Virginia M. Gilman, U.S. Department of Labor, DC [E]
Rep. Occupational Safety & Health Administration
(Alt. to M. W. Hagemann)

Guy R. Colonna, NFPA Staff Liaison

This list represents the membership at the time the Committee was balloted on the final text of this edition. Since that time, changes in the membership may have occurred. A key to classifications is found at the back of the document.

NOTE: Membership on a committee shall not in and of itself constitute an endorsement of the Association or any document developed by the committee on which the member serves.

Committee Scope: This Committee shall have primary responsibility for documents on the controlled use of flame, pyrotechnics, or other means of special effects for entertainment, exhibition, demonstration, or simulation before a proximate audience; and the design, fabrication, installation, testing, control, operation, and maintenance of user equipment, fuel storage, and sources for special effects before a proximate audience.

This Committee does not have responsibility for documents on hazards other than those involving a proximate audience and the life safety considerations of the audience.

--`,,```,-`-`,,`,,`,`,,`---
Copyright National Fire Protection Association
Provided by IHS under license with NFPA
No reproduction or networking permitted without license from IHS
Not for Resale

Contents

Chapter 1 Administration **1126–** 4
1.1 Scope **1126–** 4
1.2 Purpose **1126–** 4
1.3 Application **1126–** 4
1.4 Retroactivity **1126–** 5
1.5 Equivalency **1126–** 5

Chapter 2 Referenced Publications **1126–** 5
2.1 General **1126–** 5
2.2 NFPA Publications **1126–** 5
2.3 Other Publications **1126–** 5
2.4 References for Extracts in Mandatory Sections **1126–** 5

Chapter 3 Definitions **1126–** 5
3.1 General **1126–** 5
3.2 NFPA Official Definitions **1126–** 5
3.3 General Definitions **1126–** 5

Chapter 4 Transportation of Pyrotechnic Materials **1126–** 7
4.1 Transportation **1126–** 7

Chapter 5 Storage of Pyrotechnic Materials and Devices **1126–** 7
5.1 Storage Requirements **1126–** 7
5.2 In-Transit Requirements **1126–** 7
5.3 Separation Distance from Unprotected Heat Source or Open Flame **1126–** 7

Chapter 6 Permit Requirements and Operator Qualifications **1126–** 7
6.1 Permit Requirements **1126–** 7
6.2 Pyrotechnics Plans **1126–** 7
6.3 Content of Plans **1126–** 7
6.4 Pyrotechnics Demonstration **1126–** 8
6.5 Qualifications of Operators and Assistants **1126–** 8

Chapter 7 Requirements for Manufacturers of Pyrotechnics and Associated Equipment **1126–** 8
7.1 Pyrotechnic Product Information **1126–** 8
7.2 Identification of Pyrotechnic Devices or Binary Systems **1126–** 8
7.3 Pyrotechnic Equipment **1126–** 8
7.4 Binary Materials **1126–** 8

Chapter 8 Use of Pyrotechnics **1126–** 9
8.1 General Fire Protection **1126–** 9
8.2 Firing Prerequisites **1126–** 9
8.3 Firing Safeguards **1126–**10
8.4 Separation Distances for Audiences **1126–**10
8.5 Safety Precautions **1126–**10
8.6 Performance **1126–**11
8.7 Requirements After Performance **1126–**11

Annex A Explanatory Material **1126–**11

Annex B Inspection Requirements **1126–**13

Annex C Licensing Requirements for Pyrotechnic Operators **1126–**14

Annex D Glossary **1126–**14

Annex E Informational References **1126–**15

Index **1126–**16

Copyright National Fire Protection Association
Provided by IHS under license with NFPA
No reproduction or networking permitted without license from IHS
Not for Resale

NFPA 1126

Standard for the

Use of Pyrotechnics Before a Proximate Audience

2006 Edition

IMPORTANT NOTE: This NFPA document is made available for use subject to important notices and legal disclaimers. These notices and disclaimers appear in all publications containing this document and may be found under the heading "Important Notices and Disclaimers Concerning NFPA Documents." They can also be obtained on request from NFPA or viewed at www.nfpa.org/disclaimers.

NOTICE: An asterisk (*) following the number or letter designating a paragraph indicates that explanatory material on the paragraph can be found in Annex A.

A reference in brackets [ ] following a section or paragraph indicates material that has been extracted from another NFPA document. As an aid to the user, the complete title and edition of the source documents for extracts in mandatory sections of the document are given in Chapter 2 and those for extracts in informational sections are given in Annex E. Editorial changes to extracted material consist of revising references to an appropriate division in this document or the inclusion of the document number with the division number when the reference is to the original document. Requests for interpretations or revisions of extracted text shall be sent to the technical committee responsible for the source document.

Information on referenced publications can be found in Chapter 2 and Annex E.

Chapter 1 Administration

1.1 Scope. This standard shall provide requirements for the protection of property, operators, performers, support personnel, and the viewing audiences where pyrotechnic effects are used indoors or outdoors with a proximate audience.

1.2 Purpose.

1.2.1 The purpose of this standard shall be to provide minimum requirements to the operators and manufacturers for the safe operation of pyrotechnic effects.

1.2.2 The purpose of this standard shall be to provide requirements for the reasonable protection of pyrotechnic operators, performers, support personnel, proximate audiences, property, and buildings where pyrotechnics are used indoors or outdoors.

1.2.2.1 The purpose of this standard shall be to provide guidelines to the authority having jurisdiction for approval of the use of pyrotechnics as specified in 1.2.2.

1.2.2.2 The purpose of this standard shall be to provide requirements for local permits.

1.3 Application.

1.3.1* This standard shall apply to the use of pyrotechnics in the performing arts in conjunction with theatrical, musical, or similar productions before a proximate audience, performers, or support personnel.

1.3.2 This standard shall apply to the performance specifications, instructions, notifications, and labeling by the manufacturer of pyrotechnics materials, devices, equipment, and supplies.

1.3.3 This standard shall apply to any indoor use of pyrotechnics.

1.3.4 Application of NFPA 1123.

1.3.4.1 This standard shall apply to any outdoor use of pyrotechnics at distances less than those required by NFPA 1123, *Code for Fireworks Display*.

1.3.4.2 The use of pyrotechnics before a proximate audience shall not be construed as a display of fireworks as regulated by NFPA 1123 except that any use of aerial shells as regulated by NFPA 1123 shall comply with the provisions of that code.

1.3.5 This standard shall apply to the videotaping, audiotaping, or filming of any television, radio, or movie production only where such production takes place before a proximate audience and includes the use of pyrotechnics.

1.3.6 This standard shall apply to the rehearsal of any production in which pyrotechnics are used.

1.3.7* This standard shall not apply to the manufacture, transportation, or storage of fireworks at a manufacturing facility.

1.3.8 This standard shall not apply to the use of consumer fireworks by the general public.

1.3.9* This standard shall not apply to the manufacture, transportation, storage, and use of explosives.

1.3.10 This standard shall not apply to the transportation, handling, or use of pyrotechnics by the Armed Forces of the United States of America.

1.3.11 This standard shall not apply to the transportation of pyrotechnic materials and devices approved and governed by U.S. Department of Transportation regulations.

1.3.12* Application to Training.

1.3.12.1 This standard shall not apply to the use of pyrotechnics in training by the fire service, law enforcement, or similar government agencies.

1.3.12.2 This standard shall apply where there is a proximate audience that is not part of the live fire training evolution.

1.3.13 Applicability of NFPA *101*.

1.3.13.1 Facilities in or at which pyrotechnics are to be used or stored shall comply with the applicable provisions of NFPA *101*, *Life Safety Code*.

1.3.13.2 Pyrotechnics shall be permitted to be used in accordance with the provisions of NFPA *101*, 13.7.2, where approved by the authority having jurisdiction.

1.3.14* This standard shall not apply to the use of flammable liquids and flammable gases in the performing arts.

1.3.15 This standard shall not apply to the manufacture of model rocket and high power rocket motors as covered in NFPA 1125, *Code for the Manufacture of Model Rocket and High Power Rocket Motors*.

1.3.16* This standard shall not apply to the design, construction, limitation of propellant mass and power, and reliability of all rocket motors, other than fireworks rockets, produced commercially for sale to or use by the public for purposes of education, recreation, and sporting competition.

Copyright National Fire Protection Association
Provided by IHS under license with NFPA
No reproduction or networking permitted without license from IHS
Not for Resale

1.3.17 This standard shall not apply to the sale and use of model rockets and model rocket motors used in conformance with NFPA 1122, *Code for Model Rocketry.*

1.3.18 This standard shall not apply to the sale and use of high power sport rockets and high power sport rocket motors used in conformance with NFPA 1127, *Code for High Power Rocketry.*

1.4 Retroactivity. The provisions of this standard reflect a consensus of what is necessary to provide an acceptable degree of protection from the hazards addressed in this standard at the time the standard was issued.

1.4.1 Unless otherwise specified, the provisions of this standard shall not apply to facilities, equipment, structures, or installations that existed or were approved for construction or installation prior to the effective date of the standard. Where specified, the provisions of this standard shall be retroactive.

1.4.2 In those cases where the authority having jurisdiction determines that the existing situation presents an unacceptable degree of risk, the authority having jurisdiction shall be permitted to apply retroactively any portions of this standard deemed appropriate.

1.4.3 The retroactive requirements of this standard shall be permitted to be modified if their application clearly would be impractical in the judgment of the authority having jurisdiction, and only where it is clearly evident that a reasonable degree of safety is provided.

1.5 Equivalency. Nothing in this standard is intended to prevent the use of systems, methods, or devices of equivalent or superior quality, strength, fire resistance, effectiveness, durability, and safety over those prescribed by this standard.

1.5.1 Technical documentation shall be submitted to the authority having jurisdiction to demonstrate equivalency.

1.5.2 The system, method, or device shall be approved for the intended purpose by the authority having jurisdiction.

Chapter 2 Referenced Publications

2.1 General. The documents or portions thereof listed in this chapter are referenced within this standard and shall be considered part of the requirements of this document.

2.2 NFPA Publications. National Fire Protection Association, 1 Batterymarch Park, Quincy, MA 02169-7471.

NFPA 10, *Standard for Portable Fire Extinguishers,* 2002 edition.
NFPA 72®, National Fire Alarm Code®, 2002 edition.
NFPA *101®, Life Safety Code®,* 2006 edition.
NFPA 1122, *Code for Model Rocketry,* 2002 edition.
NFPA 1123, *Code for Fireworks Display,* 2006 edition.
NFPA 1125, *Code for the Manufacture of Model Rocket and High Power Rocket Motors,* 2001 edition.
NFPA 1127, *Code for High Power Rocketry,* 2002 edition.

2.3 Other Publications.

2.3.1 U.S. Government Publications. U.S. Government Printing Office, Washington, DC 20402.

Title 27, Code of Federal Regulations, Part 55, Bureau of Alcohol, Tobacco, Firearms and Explosives, "Explosives Law and Regulations."

Title 27, Code of Federal Regulations, Subpart K.

Title 49, Code of Federal Regulations, Part 171 to End.

2.3.2 Other Publication. *Merriam-Webster's Collegiate Dictionary,* 11th edition, Merriam-Webster, Inc., Springfield, MA, 2003.

2.4 References for Extracts in Mandatory Sections.

NFPA 1124, *Code for the Manufacture, Transportation, Storage, and Retail Sales of Fireworks and Pyrotechnic Articles,* 2006 edition.

Chapter 3 Definitions

3.1 General. The definitions contained in this chapter shall apply to the terms used in this standard. Where terms are not defined in this chapter or within another chapter, they shall be defined using their ordinarily accepted meanings within the context in which they are used. *Merriam-Webster's Collegiate Dictionary,* 11th edition, shall be the source for the ordinarily accepted meaning.

3.2 NFPA Official Definitions.

3.2.1* Approved. Acceptable to the authority having jurisdiction.

3.2.2* Authority Having Jurisdiction (AHJ). An organization, office, or individual responsible for enforcing the requirements of a code or standard, or for approving equipment, materials, an installation, or a procedure.

3.2.3 Labeled. Equipment or materials to which has been attached a label, symbol, or other identifying mark of an organization that is acceptable to the authority having jurisdiction and concerned with product evaluation, that maintains periodic inspection of production of labeled equipment or materials, and by whose labeling the manufacturer indicates compliance with appropriate standards or performance in a specified manner.

3.2.4* Listed. Equipment, materials, or services included in a list published by an organization that is acceptable to the authority having jurisdiction and concerned with evaluation of products or services, that maintains periodic inspection of production of listed equipment or materials or periodic evaluation of services, and whose listing states that either the equipment, material, or service meets appropriate designated standards or has been tested and found suitable for a specified purpose.

3.2.5 Shall. Indicates a mandatory requirement.

3.2.6 Should. Indicates a recommendation or that which is advised but not required.

3.2.7 Standard. A document, the main text of which contains only mandatory provisions using the word "shall" to indicate requirements and which is in a form generally suitable for mandatory reference by another standard or code or for adoption into law. Nonmandatory provisions shall be located in an appendix or annex, footnote, or fine-print note and are not to be considered a part of the requirements of a standard.

3.3 General Definitions.

3.3.1* Aerial Shell. A cartridge containing pyrotechnic composition, a burst charge, and an internal time fuse or module that is propelled into the air from a mortar and that is intended to burst at or near apogee.

3.3.2 Airburst. A pyrotechnic device that is suspended in the air to simulate outdoor aerial fireworks shells without producing hazardous debris.

Copyright National Fire Protection Association
Provided by IHS under license with NFPA
No reproduction or networking permitted without license from IHS
Not for Resale

3.3.3 Assistant. A person who works under the supervision of the pyrotechnic operator.

3.3.4 Audience. Spectators whose primary purpose is to view a performance.

3.3.5 Binary Materials. See 3.3.6, Binary System.

3.3.6* Binary System. A two-component pyrotechnic system.

3.3.7 Black Powder. A low explosive consisting of an intimate mixture of potassium or sodium nitrate, charcoal, and sulfur.

3.3.8 Combustible. Capable of undergoing combustion.

3.3.9* Comet. A single pellet of pyrotechnic composition that is ignited and simultaneously propelled into the air from a mortar or tube; a comet is self-consuming as it rises into the air and can be designed to split apart.

3.3.10 Concussion Effect. A pyrotechnic effect that produces a loud noise and a violent jarring shock for dramatic effect.

3.3.11 Concussion Mortar. A device specifically designed and constructed, when loaded with pyrotechnic material, to produce a concussion effect.

3.3.12* Electric Match. A device containing a small amount of pyrotechnic material that ignites when a specified electric current flows through the device and initiates pyrotechnics.

3.3.13* Electrical Firing System. Electrical equipment that provides and/or controls the ignition of pyrotechnics.

3.3.14 Electrical Isolation. See 3.3.31, Isolated Power Supply.

3.3.15 Explosive Special Effect. See 3.3.49, Pyrotechnic Special Effect.

3.3.16* Fallout Area. The designated area in which hazardous debris is intended to fall after a pyrotechnic device is fired.

3.3.17* Fallout Radius. A line that defines the fallout area of a pyrotechnic device.

3.3.18 Fire (verb). To ignite pyrotechnics by using an electric match, electrical current, or some other means.

3.3.19 Fixed Production. Any production performed repeatedly in only one geographic location.

3.3.20* Flammable. A combustible that is capable of easily being ignited and rapidly consumed by fire.

3.3.21 Flare. A pyrotechnic device designed to produce a single source of intense light for a defined period of time.

3.3.22 Flash Pot. A device used with flashpowder that produces a flash of light and directs the flash.

3.3.23 Flashpowder. A specific pyrotechnic material in powder form composed of fuel(s) and oxidizer(s) that upon ignition produces a flash of light, sparkles, an audible report, or a combination of these effects.

3.3.24* Fuel. In pyrotechnics, anything combustible or acting as a chemical-reducing agent.

3.3.25 Gerb. A cylindrical preload pyrotechnic device, intended to produce a controlled spray of sparks with a reproducible and predictable duration, height, and diameter.

3.3.26* Hazardous Debris. Any debris, produced or expelled by the functioning of a pyrotechnic device, that is capable of causing personal injury or unpredicted property damage.

3.3.27* Holder. Any device used to hold a pyrotechnic device other than a mortar.

3.3.28 Igniter. An electrical, chemical, or mechanical device used to fire pyrotechnics.

3.3.29* Ingredient. A chemical used to create a pyrotechnic material.

3.3.30 Integral Mortar. A preloaded mortar containing pyrotechnic materials and intended for a single firing only.

3.3.31* Isolated Power Supply. An ungrounded power supply that provides electricity, in which both output wires are isolated from ground.

3.3.32* Lift Charge. The composition in a pyrotechnic device that propels (lifts) the effect into the air when ignited.

3.3.33 Line Rocket. A pyrotechnic device guided along a wire or cable.

3.3.34 Magazine. A building or structure, other than an explosives manufacturing building, approved for the storage of explosive materials.

3.3.35* Mine. A device containing multiple pyrotechnic effects that are simultaneously ignited and dispersed into the air from a mortar or tube.

3.3.36 Mortar. A device used to direct and control the effect of the pyrotechnic material.

3.3.37 Oxidizer. Any material that readily yields oxygen or other oxidizing gas, or that readily reacts to promote or initiate combustion of combustible materials.

3.3.38* Performance. The enactment of a musical, dramatic, operatic, or other entertainment production.

3.3.39* Performer. Any person active in a performance during which pyrotechnics are used and who is not part of the audience or support personnel.

3.3.40* Permittee. The person or persons who are responsible for obtaining the required permits for a production that includes the use of pyrotechnics.

3.3.41 Preload. A pyrotechnic device supplied by the manufacturer in a ready-to-use condition.

3.3.42* Producer. An individual who has overall responsibility for the operation and management of the performance where the pyrotechnics are to be used.

3.3.43* Production. All the performances of a musical, dramatic, operatic, or other series of shows.

3.3.44 Proximate Audience. An audience closer to pyrotechnic devices than permitted by NFPA 1123, *Code for Fireworks Display*.

3.3.45 Pyrotechnic Device. Any device containing pyrotechnic materials and capable of producing a special effect as defined in this standard.

3.3.46* Pyrotechnic Manufacturer. A licensed individual or company that mixes chemicals to make pyrotechnics for sale or use.

3.3.47* Pyrotechnic Material (Pyrotechnic Special Effects Material). A chemical mixture used in the entertainment industry to produce visible or audible effects by combustion, deflagration, or detonation. [**1124,** 2006]

Copyright National Fire Protection Association
Provided by IHS under license with NFPA
No reproduction or networking permitted without license from IHS
Not for Resale

3.3.48* Pyrotechnic Operator. The person who has overall responsibility for the operation and safety of a pyrotechnic display.

3.3.49 Pyrotechnic Special Effect. A special effect created through the use of pyrotechnic materials and devices. *(See also 3.3.53, Special Effect.)*

3.3.50 Pyrotechnics. Controlled exothermic chemical reactions that are timed to create the effects of heat, gas, sound, dispersion of aerosols, emission of visible electromagnetic radiation, or a combination of these effects to provide the maximum effect from the least volume.

3.3.51 Rehearsal. A practice performance during which no audience is present.

3.3.52 Saxon. A pyrotechnic device consisting of a tube that rotates around a pivot point to produce a circular shower of sparks.

3.3.53* Special Effect. A visual or audible effect used for entertainment purposes, often produced to create an illusion.

3.3.54* Support Personnel. Any individual who is not a performer or member of the audience.

3.3.55 Touring Production. Any production performed in more than one geographic location.

3.3.56 Venue Manager. An individual who has overall responsibility for the operation and management of the facility where pyrotechnics are to be used in a performance.

3.3.57 Waterfall, Falls, Park Curtain. An effect of a cascade of sparks usually produced by multiple devices fired simultaneously.

3.3.58 Wheel. A pyrotechnic device that rotates on a central axis consisting of multiple gerbs or rockets attached to a framework.

Chapter 4 Transportation of Pyrotechnic Materials

4.1 Transportation. All ingredients, pyrotechnic materials, and pyrotechnic devices shall be transported in accordance with U.S. Department of Transportation (U.S. DOT) 49 CFR and any state and local requirements.

Chapter 5 Storage of Pyrotechnic Materials and Devices

5.1 Storage Requirements.

5.1.1* All pyrotechnic materials and devices shall be stored in accordance with 27 CFR Subpart K (Federal Storage Regulation) and any state and local regulations.

5.1.2 If more pyrotechnic material than is needed for the performance is prepared by mixing a single unit, the excess mixed material shall be considered, handled, stored, and disposed of as a pyrotechnic material of the applicable explosive class as defined in 27 CFR 55.

5.2 In-Transit Requirements.

5.2.1 All pyrotechnic materials and devices not stored in magazines meeting the requirements of 27 CFR Subpart K shall remain in their prescribed U.S. Department of Transportation containers until it becomes necessary to set them up for a performance.

5.2.2 The time between removal from storage and actual use shall be the shortest time practicable with respect to the needs of a performance.

5.2.3 Pyrotechnic materials and devices shall be supervised, except where they are secured or inaccessible.

5.3 Separation Distance from Unprotected Heat Source or Open Flame. Pyrotechnic materials and devices shall not be stored within 50 ft (15.3 m) of any unprotected source of heat or open flame.

Chapter 6 Permit Requirements and Operator Qualifications

6.1 Permit Requirements.

6.1.1 The requirements of this standard shall be used by the authority having jurisdiction to promote the safety of the production and the qualifications of the pyrotechnic operator.

6.1.2 The use of all pyrotechnics shall be approved by the authority having jurisdiction.

6.1.3 The authority having jurisdiction shall determine that measures are established to provide crowd management, security, fire protection, and other emergency services.

6.1.4 All planning and use of pyrotechnics shall be coordinated with the venue manager and producer.

6.2 Pyrotechnics Plans.

6.2.1 Before the performance of any production, the permittee shall submit a plan for the use of pyrotechnics to the authority having jurisdiction.

6.2.2 After a permit has been granted, the permittee shall keep the plan available at the site for safety inspectors or other designated agents of the authority having jurisdiction.

6.2.3 The addition of pyrotechnics to a performance or any change in the presentation of pyrotechnics, excluding the reduction in the number or size of the devices, shall require approval by the authority having jurisdiction.

6.3 Content of Plans.

6.3.1 The plan for the use of pyrotechnics shall be made in writing or such other form as is approved by the authority having jurisdiction.

6.3.2 The plan shall include the following:

(1) Name of the person, group, or organization sponsoring the production
(2) Date and time of day of the production
(3) Exact location of the production
(4) Name of the person actually in charge of firing the pyrotechnics (i.e., the pyrotechnic operator)
(5) Number, names, and ages of all assistants who are to be present
(6) Qualifications of the pyrotechnic operator
(7) Pyrotechnic experience of the operator
(8) Confirmation of any applicable state and federal licenses held by the operator or assistant(s)
(9) Evidence of the permittee's insurance carrier or financial responsibility

--`,,```,,,-`-`,,`,,`,`,,`---

Copyright National Fire Protection Association
Provided by IHS under license with NFPA
No reproduction or networking permitted without license from IHS
Not for Resale

(10) Number and types of pyrotechnic devices and materials to be used, the operator's experience with those devices and effects, and a definition of the general responsibilities of assistants
(11) Diagram of the grounds or facilities where the production is to be held that shows the point at which the pyrotechnic devices are to be fired, the fallout radius for each pyrotechnic device used in the performance, and the lines behind which the audience is to be restrained
(12) Point of on-site assembly of pyrotechnic devices
(13) Manner and place of storage of the pyrotechnic materials and devices
(14) Material safety data sheet (MSDS) for the pyrotechnic material(s) to be used
(15) Certification that the set, scenery, and rigging materials are inherently flame-retardant or have been treated to achieve flame-retardancy
(16) Certification that all materials worn by performers in the fallout area during use of pyrotechnic effects shall be inherently flame-retardant or have been treated to achieve flame-retardancy

6.3.3* Plan Submission. All plans shall be submitted as soon as is possible so that the authority having jurisdiction has time to be present and to notify other interested parties.

6.4 Pyrotechnics Demonstration.

6.4.1 Pre-Show Review and Demonstration.

6.4.1.1 A walk-through and a representative demonstration of the pyrotechnics shall be approved by the authority having jurisdiction before a permit is approved.

6.4.1.2 The authority having jurisdiction shall be permitted to waive this requirement based on past history, prior knowledge, and other factors, provided the authority is confident that the discharge of pyrotechnics can be conducted safely.

6.4.2 The demonstration shall be scheduled with sufficient time allowed to reset/reload the pyrotechnics before the arrival of the audience.

6.4.3 Fire Alarms.

6.4.3.1 Where the use of certain indoor pyrotechnics requires smoke detectors to be bypassed or air-handling systems to be disengaged, the fire department shall be notified and a fire department representative shall be present for the demonstration.

6.4.3.2 The individual responsible for the life safety systems of the building shall return those systems to normal operating conditions as soon as the likelihood of false alarms from the pyrotechnics has passed.

6.4.3.3 Alarm verification as described in 6.8.5.4.1 of *NFPA 72, National Fire Alarm Code*, shall be allowed as a means of controlling false alarm initiation resulting from residual particulates suspended in the air.

6.5 Qualifications of Operators and Assistants.

6.5.1 All pyrotechnic operators shall be at least 21 years old and licensed or approved by the authority having jurisdiction in accordance with any and all applicable laws.

6.5.1.1 An applicant for licensing as an operator shall provide evidence of actual experience as an operator or assistant as part of demonstrating competency to the authority having jurisdiction.

6.5.1.2 An applicant for licensing as an operator shall successfully complete a written examination of laws, regulations, and safety practices pertaining to the discharge of pyrotechnics that shall be administered by the authority having jurisdiction or otherwise shall demonstrate knowledge of these areas.

6.5.2 All assistants shall be at least 18 years old.

Chapter 7 Requirements for Manufacturers of Pyrotechnics and Associated Equipment

7.1 Pyrotechnic Product Information. The pyrotechnic operator shall use products provided with written information supplied by the manufacturer detailing the following information:

(1) Name of the pyrotechnic device and a description of its effect
(2) Performance characteristics (duration, height, and diameter of the effect) for the pyrotechnic device where used as specified, or, in the case of binary materials, where used in the specified amounts for the designated materials and equipment
(3) Material safety data sheet (MSDS) for the pyrotechnic materials
(4)*The manufacturer's statement regarding whether the pyrotechnic device or material is intended for indoor use and whether it is to be used with any cautions or special considerations
(5) Instructions for the proper method(s) of placing, loading, and using the pyrotechnic device, including any cautions or special considerations
(6) Name, address, and phone number of the manufacturer

7.2 Identification of Pyrotechnic Devices or Binary Systems.

7.2.1 All pyrotechnic products or binary systems used shall have been identified or marked by the manufacturer with the following information:

(1) Name of the pyrotechnic device or binary system
(2) Name, address, and phone number of the manufacturer
(3) Statement describing the conditions of use and potential hazards
(4)*Manufacturer's statement regarding whether the pyrotechnic device or binary system is intended for indoor use

7.2.2 The marking on the pyrotechnic device shall be of at least 6-point type size.

7.2.3 Where the pyrotechnic device is too small to bear the label specified in 7.2.1, this information shall be printed on the instruction sheet, shipping container, or packaging.

7.3 Pyrotechnic Equipment.

7.3.1 The pyrotechnic operator shall use equipment for which the manufacturer has provided instructions for use, including the ratings of the types and quantities of material(s) for those devices.

7.3.2 The pyrotechnic operator shall use electrical firing systems for which the manufacturer has provided instructions for the setup and use of the system with pyrotechnics.

7.4 Binary Materials.

7.4.1 Binary materials shall be premeasured and packaged by the manufacturer.

7.4.2 Binary materials intended for indoor use shall be labeled by the manufacturer as being intended for indoor use.

Copyright National Fire Protection Association
Provided by IHS under license with NFPA
No reproduction or networking permitted without license from IHS
Not for Resale

Chapter 8 Use of Pyrotechnics

8.1 General Fire Protection.

8.1.1* Portable Fire-Fighting Equipment. Four or more fire extinguishers of the classification and size as approved by the authority having jurisdiction shall be readily accessible while the pyrotechnics are being loaded, prepared for firing, or fired.

8.1.1.1* In all cases, at least two pressurized water, Class 2-A extinguishers and two Class 10-BC extinguishers shall be provided, in addition to those required by NFPA 10, *Standard for Portable Fire Extinguishers*, for the building.

8.1.1.2 The extinguishers shall be placed so that at least one is located on each opposing side of the performance where pyrotechnics are used.

8.1.1.3 Additional fire-extinguishing equipment shall be provided as required by NFPA 10, *Standard for Portable Fire Extinguishers*, and the authority having jurisdiction.

8.1.2 Personnel who have a working knowledge of the use of the applicable fire extinguishers shall be present while the pyrotechnics are being handled, used, or removed.

8.1.3 To prevent unauthorized personnel from gaining access to the pyrotechnics, the venue manager for the site shall provide a separate, lockable room or facility for the preparation of pyrotechnic materials and devices that has been approved by the authority having jurisdiction and that is acceptable to the pyrotechnic operator.

8.1.4 Provisions for lockable storage for pyrotechnics, approved by the authority having jurisdiction, also shall be provided.

8.1.5 No personnel shall use or handle pyrotechnic materials or devices while under the influence of intoxicating beverages, narcotics, controlled substances, or prescription or nonprescription drugs that can impair judgment.

8.1.6 Fire Detection and Life Safety Systems.

8.1.6.1 Portions of fire detection and life safety systems shall be permitted to be interrupted during the operation of temporarily installed pyrotechnic effects when the following conditions are met:

(1) Approval by the authority having jurisdiction
(2) Approval by the owner or owner's agent
(3)*Presence of an approved fire watch capable of directing the operation of all fire detection and life safety systems installed in the building

8.1.6.2 Fire detection and life safety systems shall be permitted to be interrupted during the operation of permanently installed pyrotechnic effects only for initial acceptance of the system.

8.2 Firing Prerequisites.

8.2.1 Mounting.

8.2.1.1 All pyrotechnic devices shall be mounted in a secure manner to maintain their proper positions and orientations so that, when they are fired, the pyrotechnic effects described in the plan submitted by the permittee are produced.

8.2.1.2* Pyrotechnic devices shall be mounted so that no fallout from the device endangers human lives, results in personal injury, or damages property.

8.2.2 Equipment.

8.2.2.1 Pyrotechnic materials shall be fired only from equipment specifically constructed for the purpose of firing pyrotechnic materials.

8.2.2.2 The pyrotechnic operator shall be responsible for selecting equipment and materials that are compatible.

8.2.2.3 Protection of Performer.

8.2.2.3.1 Where a pyrotechnic special effect is placed on or in contact with a performer's body, a means of shielding or containment adequate to prevent any injury to the performer shall be provided.

8.2.2.3.2 This protection shall be sufficient to protect against the normal functioning of the pyrotechnic special effect as well as any possible malfunction.

8.2.2.4 Converted electrical switch boxes, lamp sockets, lamp holders, plug fuses, or other similar thin-walled, brittle devices shall not be used for concussion mortars or flash pots.

8.2.3 Mixing of Binary Systems. Binary systems shall be mixed and used in accordance with the manufacturer's instructions.

8.2.3.1 Binary systems shall be mixed one unit at a time, and no more units than are needed for immediate use shall be mixed.

8.2.3.2 Binary systems shall only be mixed in the bottles supplied by the manufacturer.

8.2.3.3 No additional tools shall be used in the mixing of binary systems.

8.2.4 All holders shall be constructed and secured so that they remain in a fixed position when the pyrotechnic device is fired.

8.2.5 Mortars and Flash Pots.

8.2.5.1 Mortars and flash pots shall be constructed so that they do not fragment when the pyrotechnic material is fired and so that their shapes are not distorted after use.

8.2.5.2 Distorted mortars and flash pots shall not be used.

8.2.6 Before firing the pyrotechnic device, the pyrotechnic operator or designated performance security staff shall prevent unauthorized entry into the area where the special effects are to occur.

8.2.7 Rotating pyrotechnic devices, such as wheels and saxons, shall be mounted securely so that their rotation does not cause the holder to fail.

8.2.8 Rockets.

8.2.8.1 Where rockets are launched before a proximate audience, performers, or support personnel, the rockets shall be attached securely to a guide wire or cable with both ends attached and placed on an impact-resistant surface located at the terminal end of the guide.

8.2.8.2 The guide wire or cable required by 8.2.8.1 shall be of sufficient strength and flame resistance to withstand the exhaust from the rocket.

8.2.8.3 An effective arrangement to stop the rocket shall be provided.

8.2.9 Flares shall be placed so that any debris falls into a safe, flame-resistant area.

Copyright National Fire Protection Association
Provided by IHS under license with NFPA
No reproduction or networking permitted without license from IHS
Not for Resale

8.2.10 Comets and mines shall be fired so that the trajectory of their pyrotechnic material is not carried over the audience.

8.2.11 Waterfalls and gerbs shall be placed for firing so that no flammable materials are within their fallout area.

8.2.12 Pyrotechnic devices and materials used indoors shall be specifically manufactured and marked for indoor use by the manufacturer.

8.2.13 Airbursts shall be permitted to be fired above the audience, subject to the following conditions:

(1) The airburst shall be suspended by a minimum 30-gauge metal wire that is attached securely to a secure support acceptable to the authority having jurisdiction.
(2) The airburst shall occur at a minimum height of three times the diameter of the effect.
(3) Where the effect is demonstrated, there shall be no burning or glowing particles less than 15 ft (4.6 m) above the floor.

8.3* Firing Safeguards.

8.3.1 Circuit Testers.

8.3.1.1 Circuit testers shall supply no more than 25 mA.

8.3.1.2 Circuit testers shall be permitted to include, but are not limited to, blasting galvanometers, low-current multimeters, or a firing system with a built-in circuit tester.

8.3.2 Power Sources.

8.3.2.1 Power sources used for firing pyrotechnic devices shall be restricted to batteries or isolated power supplies used for firing purposes only.

8.3.2.2 Firing systems employing isolation transformers shall be permitted to use commercial power.

8.3.2.3 Transformers shall be permitted to be located within the controllers of firing systems, within the pyrotechnic devices themselves, or elsewhere within the firing circuit.

8.3.3 All firing systems shall be designed to ensure against accidental firing by providing at least a two-step interlock in which no firing power can be applied to any firing circuit unless the operator intentionally does both of the following:

(1) Enables or arms the firing system
(2) Deliberately applies firing power

8.3.4* Electrical firing systems shall include a means that greatly reduces the possibility that unauthorized or unintentional firings can occur.

8.3.5 Communication.

8.3.5.1 Pyrotechnic devices shall be fired only when the area where the effect is to occur is in clear view of the pyrotechnic operator or an assistant who is in direct communication with the operator.

8.3.5.2 Direct communication with the pyrotechnic operator or assistant shall be permitted to be accomplished using signal lights or other nonverbal means of communication.

8.3.6* Warning lights or other signals shall be permitted to indicate the impending firing of a pyrotechnic effect.

8.3.7 Concussion mortars and concussion effects shall be secured by being placed under the stage or behind barricades made of equipment road cases to prevent access by the audience, performers, and support personnel.

8.3.8 While the authority having jurisdiction has the authority to stop the firing of pyrotechnics, the ultimate responsibility for firing shall be that of the pyrotechnic operator.

8.4 Separation Distances for Audiences.

8.4.1* Each pyrotechnic device fired during a performance shall be separated from the audience by a minimum of 15 ft (4.6 m) or twice the fallout radius of the device, whichever is greater, except where otherwise approved by the authority having jurisdiction.

8.4.2 Concussion mortars and concussion effects shall be separated from the audience by a minimum of 25 ft (7.6 m).

8.4.3 There shall be no glowing or flaming particles within 10 ft (3 m) of the audience.

8.5 Safety Precautions.

8.5.1 The premises where pyrotechnic materials and devices are handled and used shall be maintained in a neat and orderly condition and shall be kept free of any conditions that can create a fire hazard.

8.5.2 Shipping Container Inspection. The pyrotechnic operator shall inspect the containers in which all pyrotechnic materials and devices have been shipped.

8.5.2.1 Damaged pyrotechnic materials and devices shall not be used and shall be disposed of in accordance with the manufacturer's instructions.

8.5.2.2 Before disposal, shipping containers shall be inspected for loose pyrotechnic materials.

8.5.2.3 If a shipping container is found to contain loose pyrotechnic materials, it shall be disposed of in accordance with the manufacturer's instructions.

8.5.3 Storage Requirements.

8.5.3.1 Pyrotechnic materials and devices shall be stored in accordance with regulations promulgated by the Bureau of Alcohol, Tobacco, Firearms, and Explosives (ATF).

8.5.3.2 A closed vehicle, such as a truck, shall be permitted to be used for storage where permitted by ATF, state, or local regulations.

8.5.4 A quantity of pyrotechnics no greater than that needed for the production of special effects in one performance or rehearsal shall be removed from storage.

8.5.5 Smoking.

8.5.5.1 Smoking shall not be permitted within 25 ft (7.6 m) of the area where pyrotechnics are being handled or stored.

8.5.5.2 NO SMOKING signs shall be conspicuously posted.

8.5.5.3 Smoking by performers as part of the performance shall be permitted as blocked in rehearsals and approved by the pyrotechnic operator and the authority having jurisdiction.

8.5.6 No pyrotechnics shall be left unattended other than in a secured, approved location.

8.5.7* The pyrotechnic operator and assistants shall wear safety glasses and protective clothing applicable to the hazard associated with the material during preparation and loading of pyrotechnic devices.

Copyright National Fire Protection Association
Provided by IHS under license with NFPA
No reproduction or networking permitted without license from IHS
Not for Resale

8.6 Performance.

8.6.1 Safeguarding Performers.

8.6.1.1 The pyrotechnic effect operator shall advise all performers and support personnel that they are exposed to a potentially hazardous situation when performing or otherwise carrying out their responsibilities in the vicinity of a pyrotechnic effect.

8.6.1.2 Performers and support personnel familiar and experienced with the pyrotechnic effects being used shall be permitted to be in the area of a pyrotechnic effect, but only voluntarily and in the performance of their duties.

8.6.2 No part, projectile, or debris from the pyrotechnic material or device shall be propelled so that it damages overhead properties, overhead equipment, or the ceiling and walls of the performance site.

8.6.3 Final Pre-Performance Safety Procedures.

8.6.3.1 Immediately before any performance, the pyrotechnic operator shall make a final check of wiring, position(s), hookups, and pyrotechnic devices to ensure that they are in working order.

8.6.3.2 The pyrotechnic operator also shall verify safety distances.

8.6.4 The placement and wiring of all pyrotechnic devices shall be designed to minimize the possibility of performers and support personnel disturbing the devices during a performance.

8.6.5 The pyrotechnic operator shall exercise extreme care throughout the performance to ensure that the pyrotechnic devices function correctly and that the performers, support personnel, and audience are clear of the devices.

8.6.6 Smoke Control. When pyrotechnics are fired, the quantity of smoke developed shall be controlled so as not to obscure the visibility of exit signs or paths of egress.

8.7 Requirements After Performance.

8.7.1 Post-Performance Procedures.

8.7.1.1 Immediately after each performance and before support personnel remove any property related to a performance, the pyrotechnic operator shall verify that all pyrotechnic devices have been fired.

8.7.1.2 Any unfired pyrotechnic materials or devices shall be either fired or disposed of in accordance with the manufacturer's recommendations.

8.7.2 All unused pyrotechnics shall be disposed of in accordance with the manufacturer's instructions or returned to storage as soon as possible following the performance or rehearsal.

8.7.3 After all other properties and equipment relating to the production have been removed from the performance site, the pyrotechnic operator shall verify that the performance site is free of any pyrotechnic devices or materials.

8.7.4 Post-Performance Pyrotechnics Storage Requirement.

8.7.4.1 All pyrotechnics shall be stored properly for transportation to the next performance.

8.7.4.2 No pyrotechnics shall be transported unless such transportation meets U.S. Department of Transportation regulations.

8.7.5 Binary systems that have been mixed in excess of the needs of a rehearsal or performance shall be stored as an explosive of the applicable class or disposed of in accordance with the manufacturer's instructions. *(See Section 5.3 for storage requirements.)*

8.7.6 Life safety and other systems that have been disarmed or disengaged as specified by 6.4.3 and 8.1.6 shall be restored to normal operating condition as soon as the likelihood of false alarms from the use of pyrotechnics has passed.

8.7.7 The fire watch required by 8.1.6 shall remain present until the restoration of normal operating conditions has been verified.

Annex A Explanatory Material

Annex A is not a part of the requirements of this NFPA document but is included for informational purposes only. This annex contains explanatory material, numbered to correspond with the applicable text paragraphs.

A.1.3.1 The circumstances of each show or attraction can be unique and can require individual evaluation when determining the need for protective systems. Factors such as the experience and qualifications of the operations and maintenance personnel, clearance distance between show elements and nonparticipants, visual conditions, and magnitude of the potential hazards are to be weighed in the development and presentation of the production.

A.1.3.7 For information on fireworks manufacturing, see NFPA 1124, *Code for the Manufacture, Transportation, Storage, and Retail Sales of Fireworks and Pyrotechnic Articles.*

A.1.3.9 For information on the manufacture, transportation, storage, and use of explosives, see NFPA 495, *Explosive Materials Code.*

A.1.3.12 For information on training uses for pyrotechnics, see NFPA 1403, *Standard on Live Fire Training Evolutions.*

A.1.3.14 For information on flammable and combustible liquids, see NFPA 30, *Flammable and Combustible Liquids Code.* For information on storage and handling of liquefied petroleum gases, see NFPA 58, *Liquefied Petroleum Gas Code.*

A.1.3.16 For information on model rockets, see NFPA 1122, *Code for Model Rocketry.*

A.3.2.1 Approved. The National Fire Protection Association does not approve, inspect, or certify any installations, procedures, equipment, or materials; nor does it approve or evaluate testing laboratories. In determining the acceptability of installations, procedures, equipment, or materials, the authority having jurisdiction may base acceptance on compliance with NFPA or other appropriate standards. In the absence of such standards, said authority may require evidence of proper installation, procedure, or use. The authority having jurisdiction may also refer to the listings or labeling practices of an organization that is concerned with product evaluations and is thus in a position to determine compliance with appropriate standards for the current production of listed items.

A.3.2.2 Authority Having Jurisdiction (AHJ). The phrase "authority having jurisdiction," or its acronym, AHJ, is used in NFPA documents in a broad manner, since jurisdictions and approval agencies vary, as do their responsibilities. Where public safety is primary, the authority having jurisdiction may be a

Copyright National Fire Protection Association
Provided by IHS under license with NFPA
No reproduction or networking permitted without license from IHS
Not for Resale

federal, state, local, or other regional department or individual such as a fire chief; fire marshal; chief of a fire prevention bureau, labor department, or health department; building official; electrical inspector; or others having statutory authority. For insurance purposes, an insurance inspection department, rating bureau, or other insurance company representative may be the authority having jurisdiction. In many circumstances, the property owner or his or her designated agent assumes the role of the authority having jurisdiction; at government installations, the commanding officer or departmental official may be the authority having jurisdiction.

A.3.2.4 Listed. The means for identifying listed equipment may vary for each organization concerned with product evaluation; some organizations do not recognize equipment as listed unless it is also labeled. The authority having jurisdiction should utilize the system employed by the listing organization to identify a listed product.

A.3.3.1 Aerial Shell. Comets and mines are not aerial shells. The shells are most commonly 3 in. to 6 in. (76 mm to 152 mm) outside diameter and are fired from mortars. Upon firing, the fuse and lift charge are consumed.

A.3.3.6 Binary System. These items are shipped as separate ingredients: an oxidizer and a fuel. The ingredients do not become a pyrotechnic material until they are mixed.

A.3.3.9 Comet. A comet is not an aerial shell or mine. Comets frequently leave a trail of sparks as they rise in the air, and they sometimes burst into smaller fragments at their zenith.

A.3.3.12 Electric Match. Electric matches are often incorrectly called squibs.

A.3.3.13 Electrical Firing System. In an electrical system, the electrical firing system is the source of electric current used to initiate electric matches or other devices. Generally, the electrical firing system has components, such as a primary key switch, test circuits, warning indicators, cables, isolation transformers, and switches to control the routing of the current to various pyrotechnics.

A.3.3.16 Fallout Area. The fallout area is defined as a circle that, in turn, is defined by the fallout radius.

A.3.3.17 Fallout Radius. The line is defined by two points. The first point is at the center of a pyrotechnic device. The second point is the point most distant from the center of the pyrotechnic device at which any hazardous debris from the device can fall.

A.3.3.20 Flammable. Flammables can be solids, liquids, or gases exhibiting these qualities.

A.3.3.24 Fuel. Examples of fuels include sulfur, aluminum powder, iron powder, charcoal, magnesium, gums, and organic plastic binders. Fuels are an ingredient of pyrotechnic materials.

A.3.3.26 Hazardous Debris. This includes, but is not limited to, hot sparks, heavy casing fragments, and unignited components. Materials such as confetti, lightweight foam pieces, feathers, or novelties are not to be construed as hazardous debris.

A.3.3.27 Holder. The purpose of a holder is to maintain the position of a pyrotechnic device. Holders hold preloads, which are self-contained. A holder is not to be construed to be a mortar.

A.3.3.29 Ingredient. Such a chemical is not itself a pyrotechnic material.

A.3.3.31 Isolated Power Supply. An isolated power supply can be an ungrounded generator, an ungrounded dc-to-ac converter, or commercial power supplied through an isolation transformer.

A.3.3.32 Lift Charge. The lift charge usually consists of a Black Powder charge.

A.3.3.35 Mine. A mine is not an aerial shell or comet.

A.3.3.38 Performance. The enactment begins and progresses to its end according to a script, plan, or other preconceived list of events. A performance can include encores.

A.3.3.39 Performer. Performers can include, but are not limited to, actors, singers, musicians, and acrobats.

A.3.3.40 Permittee. The permittee can vary from jurisdiction to jurisdiction. The pyrotechnic operator is not necessarily the permittee.

A.3.3.42 Producer. Generally, the producer is an employee of the promotion company, entertainment company, festival, theme park, or other entertainment group.

A.3.3.43 Production. There are two types of productions: fixed and touring.

A.3.3.46 Pyrotechnic Manufacturer. A federal explosives manufacturer's license (ATF) is required in order to mix a binary system.

The person loading mixed binary materials into devices is not considered a manufacturer.

A.3.3.47 Pyrotechnic Material (Pyrotechnic Special Effects Material). Such a chemical mixture consists predominantly of solids capable of producing a controlled, self-sustaining, and self-contained exothermic chemical reaction that results in heat, gas, sound, light, or a combination of these effects. The chemical reaction functions without external oxygen.

A.3.3.48 Pyrotechnic Operator. The operator is also responsible for storing, setting up, and removing pyrotechnic materials and devices after a performance.

A.3.3.53 Special Effect. For example, smoke might be produced to create the impression of fog being present, or a puff of smoke, a flash of light, and a loud sound might be produced to create the impression that a cannon has been fired.

A.3.3.54 Support Personnel. Among others, support personnel include the road crew of any production, stage hands, property masters, security guards, fire watch officers, janitors, or any other employee.

A.5.1.1 Binary systems are usually supplied in fuel and oxidizer packages, which are intended to be mixed as single units of fixed size.

A.6.3.3 Advance notice should be given no less than 24 hours prior to an event. In some instances, the authority having jurisdiction can waive the 24-hour time period for advance notice.

A.7.1(4) Pyrotechnics intended for indoor use can be used outdoors.

A.7.2.1(4) Chemicals and compounds that are not recommended for indoor use other than in trace quantities include, but are not limited to, antimony, arsenic, cadmium, chromium, lead, mercury, nickel, selenium, zinc, and their compounds; naphthalene; or any dye rated as a carcinogen.

Pyrotechnics intended for indoor use can be used outdoors.

Copyright National Fire Protection Association
Provided by IHS under license with NFPA
No reproduction or networking permitted without license from IHS
Not for Resale

A.8.1.1 Attempting to extinguish pyrotechnic fires is not recommended. Fire extinguishers should be chosen to fight potential secondary fires.

A.8.1.1.1 It is often helpful, depending on the type of effect, to have one or more water sprayers (atomizers) sized according to the effect to be present for minor occurrences.

A.8.1.6.1(3) A fire watch is a qualified person or persons in attendance during all times when fixed fire detection systems are intentionally taken out of operation, and should be acceptable to the authority having jurisdiction. The fire watch should be familiar with the operation of all fire and life safety systems in the building and be able to notify emergency responders.

A.8.2.1.2 Deliberate destruction of properties or portions of the set, where destroyed as part of the special effects, should not be construed as property damage.

A.8.3 The source used for testing match continuity should be separate from the firing power supply and must be strictly incapable of producing more than 25 mA. Electromagnetic induced currents in firing circuit wiring can be reduced by utilizing one or more of the following methods:

(1) Use of twisted pair
(2) Use of shielded wire, with the shield bonded to earth ground
(3) Running the wire through metal conduit that is bonded to earth ground
(4) Shunting as near to the electric match as practical

Firing power sources used for firing pyrotechnic devices should be restricted to the following:

(1) Batteries
(2) Low-voltage dc power supplies
(3) Transformers incorporating an electrostatic shield between the primary and secondary winding, with the shield connected to ground

The firing power source, be it ac or dc, and regardless of the voltage level, should be grounded and fused such that a ground fault in the firing circuit cannot cause unintentional ignition. Firing circuit design should be such that neither ignitor lead is electrically connected to the firing power source until ignition is intended. It should not be permitted to wire one side of multiple match terminals together, then to switch current to the other terminal of the ignitor. Switching of one line is permitted if there is only one ignitor in the system or if there is only one match per firing power source. Suggested firing circuit is shown in Figure A.8.3.

A.8.3.4 Common techniques include a key-operated switch or similar device. Switches should have labels under or above each switch. The labels should use either letters or numbers.

A.8.3.6 Warning lights should be used for warning support personnel of the presence of concussion special effects.

A.8.4.1 A pyrotechnic device with a 10 ft (3 m) fallout radius should be separated from the audience by a minimum distance of 20 ft (6 m).

A.8.5.7 Protective clothing should include long-sleeved shirts and long pants made of 100 percent cotton, leather, or other materials with equivalent flammability, melting, thermal, or static-reducing protective characteristics.

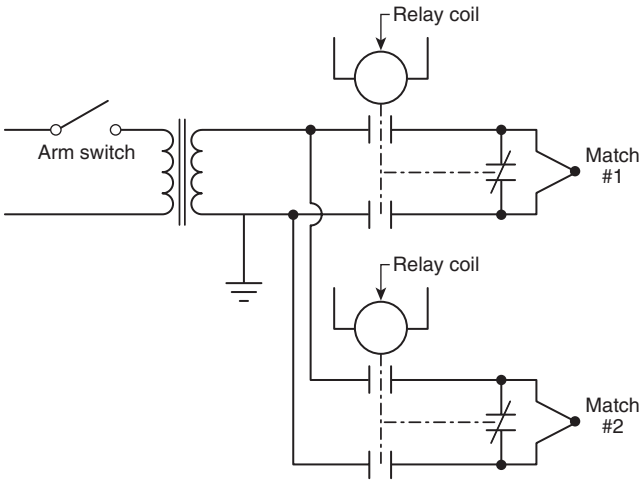

FIGURE A.8.3 Suggested Firing Circuit. Note that the relay contacts shown may be replaced by solid state switching devices. (Circuitry for test currents is omitted for clarity.)

Annex B Inspection Requirements

This annex is not a part of the requirements of this NFPA document but is included for informational purposes only.

B.1 Inspection Requirements. The authority having jurisdiction, who is required to judge the safety of any production, might or might not be familiar with pyrotechnic special effects. The following guidelines are provided as a possible inspection routine that can be used as a model:

(1) Access
  (a) Fire lane kept clear
  (b) Hydrants not blocked
  (c) Fire department connections clear
  (d) Standpipe connections clear
  (e) At least two fire extinguishers provided
  (f) Extinguishing equipment charged and in good working order
  (g) Warning signs
(2) Exits
  (a) All designated exits clear
  (b) Exits visible
(3) Pyrotechnic materials and devices
  (a) Proper and current license in the possession of the pyrotechnic operator
  (b) Permit on site
  (c) Fire department briefed on proposed activity
  (d) Proper ventilation
(4) Electrical
  (a) Cords and connections in good condition
  (b) Power supply operational and in good condition
  (c) Pyrotechnic firing mechanism in good working order
(5) Flameproofing
  (a) Set and scenic materials treated for flame retardance
  (b) Burlap or other protective materials used for rigging treated for flame retardance

--`,,```,,-`-`,,`,,`,`,,`---
Copyright National Fire Protection Association
Provided by IHS under license with NFPA
No reproduction or networking permitted without license from IHS
Not for Resale

Annex C Licensing Requirements for Pyrotechnic Operators

This annex is not a part of the requirements of this NFPA document but is included for informational purposes only.

C.1 Pyrotechnic Experience. A license should be granted only to an individual who has actively participated in the setup and loading of at least five performances where pyrotechnic special effects were used. (The issuing office can substitute an alternative number of performances.)

C.2 Formal Requirements. A license should be granted only to an individual who has met at least one of the following requirements:

(1) Successful completion of a comprehensive written examination covering this standard and state laws pertaining to the use of pyrotechnic special effects
(2) Receipt of a competency certificate from a national organization that promotes the safe use of pyrotechnic special effects
(3) Possession of a license for the use of pyrotechnic special effects issued by another state

C.3 Provisions for License Renewal. A license should not be renewed unless the applicant's record proves active participation in at least three pyrotechnic special effect performances during the past 4 years and that those performances were conducted in a safe manner. The pyrotechnic uses can be of either the indoor or outdoor type.

Annex D Glossary

This annex is not a part of the requirements of this NFPA document but is included for informational purposes only.

D.1 Common Industry Terms. The following terms are not necessarily inclusive of all the terms used in the pyrotechnic special effects industry.

D.1.1 Alternating Current (ac). An electrical current that reverses direction in a circuit at regular intervals. Almost all electrical current supplied from wall outlets or sockets is alternating current.

D.1.2 Black Match. A fuse made from thread impregnated with Black Powder and used for igniting pyrotechnic devices.

D.1.3 Blank Cartridge. A cartridge constructed from a cartridge case equipped with a percussion primer and filled with various loads of smokeless powder or other propellant. Weapons using blank cartridges often are used in conjunction with bullet hits.

D.1.4 Body Hit Effect. The effect of a bullet hit that simulates impact from a weapon as it strikes a person.

D.1.5 Bridgewire. A fine wire that either heats up or explodes when an electric current is applied. It is used to fire pyrotechnic devices.

D.1.6 Bullet Hit. A small explosive charge attached to a person's clothing or body, or to an inanimate object, to simulate a slug from a weapon as it strikes a person or object.

D.1.7 Bullet Hit Effect. The effect of a bullet hit that simulates impact from a weapon as it strikes an object.

D.1.8 Colored Smoke. An aerosol of special dyestuffs of chemical reactants dispersed by pyrotechnic heat or explosion.

D.1.9 Color Pot. A tube containing pyrotechnic materials. It produces a colored flame when ignited.

D.1.10 Concussion Flashpowder. Flashpowder intended to be used in a concussion mortar to produce a loud concussive effect.

D.1.11 Consumer Fireworks (formerly known as "Common Fireworks"). Any small fireworks device designed primarily to produce visible effects by combustion that complies with the construction, chemical composition, and labeling regulations of the U.S. Consumer Product Safety Commission, as set forth in 16 CFR 1500 and 1507. Some small devices designed to produce audible effects are included, such as whistling devices, ground devices containing 50 mg (0.8 gr) or less of explosive composition (salute powder), and aerial devices containing 130 mg (2 gr) or less of explosive composition (salute powder) per explosive unit. Consumer fireworks are classed as Explosives 1.4G and described as Fireworks UN0336 by the U.S. Department of Transportation.

D.1.12 Deflagration. A rapid chemical reaction in which the output of heat is sufficient to enable the reaction to continue and accelerate without input of heat from another source. Deflagration is primarily a surface phenomenon, with most reaction products flowing away from the unreacted material along the surface at less than supersonic velocity. The effect of a deflagration under confinement is an explosion. Confinement of the reaction increases pressure, rate of reaction, and temperature and, in some cases, can cause transition into a detonation.

D.1.13 Det Cord. A flexible detonating cord. It is a highly explosive material encased in a plastic-covered cord resembling a clothesline.

D.1.14 Detonation. An extremely rapid chemical reaction in which the pressure generated is sufficient to cause the formation of a shock wave, which causes the reaction to continue. Detonation is a phenomenon with reaction products flowing in the direction of unreacted materials at supersonic velocity. The effect of a detonation with or without confinement is an explosion.

D.1.15 Detonator. Any device containing an initiating or primary explosive that is used for initiating detonation. The term includes, but is not limited to, electric blasting caps (instantaneous and delay types), blasting caps for use with safety fuses, detonating cord delay connectors, and nonelectric caps that use a detonating cord, shock tube, or any other replacement for electric legwires. A detonator also could be an explosive or device initiated by a primer and used to initiate another explosive that is less sensitive and larger.

D.1.16 Direct Current (dc). An electrical current that flows in one direction. Most frequently, direct current is supplied by a battery.

D.1.17 Display Fireworks (formerly known as "Special Fireworks"). Large firework articles designed to produce visible or audible effects for entertainment purposes by combustion, deflagration, or detonation. This term includes, but is not limited to, salutes containing more than 130 mg (2 gr) of explosive composition (salute powder), aerial shells containing more than 60 g (2.1 oz) of total pyrotechnic and explosive composition, and other display pieces that exceed the limit for classification as consumer fireworks. Display fireworks are described as Fireworks UN0335 and classed as Explosives 1.3G by the U.S. Department of Transportation.

--`,,```,,-`-`,,`,,`,`,,`---

Copyright National Fire Protection Association
Provided by IHS under license with NFPA
No reproduction or networking permitted without license from IHS
Not for Resale

D.1.18 Explosion. The rapid production of hot gases at a high pressure as the result of a chemical reaction and the sudden release of the energy to cause strong dynamic stresses in the surroundings. The term usually refers to the effects of a detonation of initiating explosives and high explosives but also applies to the effect of a deflagrating propellant explosive in certain circumstances such as heavy confinement. The term also describes a mechanical phenomenon in which failure of the container results in a sudden release of pressure from within a vessel.

D.1.19 Explosive. Any chemical compound, mixture, or device whose primary or common purpose is to function by explosion. The term includes, but is not limited to, dynamite, Black Powder, pellet powder, initiating explosives, detonators, safety fuses, squibs, detonating cords, igniter cords, and igniters. The term "explosives" includes any material determined to be within the scope of 18 USC 40, "Importation, Manufacture, Distribution, and Storage of Explosive Materials," and also includes any material classified as Explosive 1.1, 1.2, or 1.3 by the U.S. Department of Transportation, "Hazardous Materials Regulations."

D.1.20 Fireworks. Any composition or device for producing a visible and/or audible effect by combustion, deflagration, or detonation and that meets the definition of "consumer" or "display" fireworks as set forth by 49 CFR 171 to end, U.S. Department of Transportation, "Hazardous Materials Regulations."

D.1.21 First Fire. The ignited mixture used with pyrotechnic devices and loaded in direct contact with the main pyrotechnic charge. A pyrotechnic first-fire mixture is compounded to produce a high temperature and hot slag. The mixture is readily ignitible and capable of igniting the underlying pyrotechnic charge.

D.1.22 Lycopodium. The spores produced by the genus of mosses called lycopodium. This powdery, organic, yellow material can be agitated and dispersed mechanically into a cloud and then ignited by a spark, pilot flame, or electrical heating device. Although not a pyrotechnic material, this material is used by special effects operators to produce fire effects or in conjunction with other pyrotechnics to create a special effect.

D.1.23 Nonelectric Detonator. A detonator that does not need electric energy to function.

D.1.24 Photoflash Flashpowder. A loose pyrotechnic mixture that yields a very large amount of light for a small fraction of a second on exploding.

D.1.25 Quick Match. Black match that is encased in a loose-fitting paper sheath. Although exposed black match burns slowly, quick match burns extremely rapidly and almost instantaneously. Quick match is used in fuses for aerial shells and for simultaneous ignition of a number of pyrotechnic devices, such as lances in a ground display piece.

D.1.26 Safety Fuse. A flexible cord containing an internal burning medium by which fire or flame is conveyed at a constant and relatively uniform rate from the point of ignition to the point of use.

D.1.27 Salute Powder. See D.1.30, Sonic Flash.

D.1.28 Smoke Pot. A pyrotechnic device used to create smoke during a production.

D.1.29 Soft Detonator. A detonator with a higher velocity than a bullet hit, but with no metallic elements or jacket. It is essentially a blasting cap without a metal jacket.

D.1.30 Sonic Flash (Salute Powder, Extra-Fast Flash, Concussion Flashpowder). Flashpowder specifically formulated to produce a loud concussive effect.

D.1.31 Sparkle Flashpowder. A flashpowder that produces a bright flash of light and a shower of sparks when ignited.

D.1.32 Sparkle Pot. A pyrotechnic device intended to contain and control the discharge of sparkle flashpowder.

D.1.33 Squib. A device consisting of an electric match plus a base pyrotechnic charge. It usually is contained in a thin metal tube and often has a hole or slit to direct the flame produced when fired. Squibs are regulated in a manner similar to blasting caps. Squibs are not usually used in fireworks, although electric matches often are incorrectly called squibs.

D.1.34 Stars. Small masses of pyrotechnic compounds that are projected from aerial shells, mines, or roman candles. Stars burn while in the air, producing color or streamer effects.

D.1.35 Theatrical Flashpowder. A pyrotechnic material intended for use in theatrical shows. Theatrical flashpowder produces a flash of light when ignited. Typical theatrical flashpowders burn more slowly than salute powder and also might produce a shower of sparks. Theatrical flashpowder is not intended to produce a loud report.

Annex E Informational References

E.1 Referenced Publications. The documents or portions thereof listed in this annex are referenced within the informational sections of this standard and are not part of the requirements of this document unless also listed in Chapter 2 for other reasons.

E.1.1 NFPA Publications. National Fire Protection Association, 1 Batterymarch Park, Quincy, MA 02169-7471.

NFPA 30, *Flammable and Combustible Liquids Code*, 2003 edition.

NFPA 58, *Liquefied Petroleum Gas Code*, 2004 edition.

NFPA 495, *Explosive Materials Code*, 2006 edition.

NFPA 1122, *Code for Model Rocketry*, 2002 edition.

NFPA 1124, *Code for the Manufacture, Transportation, Storage, and Retail Sales of Fireworks and Pyrotechnic Articles*, 2006 edition.

NFPA 1403, *Standard on Live Fire Training Evolutions*, 2002 edition.

E.1.2 Other Publications.

E.1.2.1 U.S. Government Publications. U.S. Government Printing Office, Washington, DC 20402.

Title 16, Code of Federal Regulations, Parts 1500 and 1507, U.S. Consumer Product Safety Commission, "Federal Hazardous Substances Act Regulations."

Title 49, Code of Federal Regulations, Parts 171 to end, U.S. Department of Transportation, "Hazardous Materials Regulations."

Title 18, *United States Code*, Chapter 40, "Importation, Manufacture, Distribution, and Storage of Explosive Materials," 1970.

E.2 Informational References. (Reserved)

E.3 References for Extracts in Informational Sections. (Reserved)

Copyright National Fire Protection Association
Provided by IHS under license with NFPA
No reproduction or networking permitted without license from IHS
Not for Resale

Index

© 2005 National Fire Protection Association. All Rights Reserved.

The copyright in this index is separate and distinct from the copyright in the document that it indexes. The licensing provisions set forth for the document are not applicable to this index. This index may not be reproduced in whole or in part by any means without the express written permission of NFPA.

-A-

Access, fire fighting ..... B.1(1)
Aerial shells 1.3.4.2
  Definition 3.3.1, A.3.3.1
Airbursts 8.2.13
  Definition 3.3.2
Air-handling units, disengaging of 6.4.3, 8.7.6
Alarms, fire .....*see* Fire alarm and detection systems
Alternating current (definition) D.1.1
Application of standard ..... 1.3, A.1.3.1 to A.1.3.16
Approved (definition) 3.2.1, A.3.2.1
Assistants ..... 6.3.2(5), 6.3.2(8), 6.3.2(10)
  Communications 8.3.5.1, 8.3.5.2
  Definition 3.3.3
  Impairment of 8.1.5
  Protective clothing 8.5.7, A.8.5.7
  Qualifications of 6.5.2
Audience (definition) ..... 3.3.4; *see also* Proximate audience
Authority having jurisdiction
  Approvals by ..... 8.1.1, 8.1.3, 8.1.4, 8.1.6 .1(1), 8.4.1, 8.5.5.3, A.8.1.1, A.8.4.1
  Definition 3.2.2, A.3.2.2
  Inspection requirements B.1
  Permit requirements ..... 6.1 to 6.4, A.6.3.3
  Pyrotechnic operators, qualifications of 6.5.1
  Responsibility for firing 8.3.8

-B-

Binary materials .....*see* Binary systems
Binary systems ..... 7.1(2), 7.4, 8.2.3
  Definition 3.3.6, A.3.3.6
  Disposal of 8.7.5
  Identification of ..... 7.2, A.7.2.1(4)
  Indoor use 7.4.2
  Storage of 8.7.5, A.5.1.1
Black match (definition) D.1.2
Black Powder (definition) 3.3.7
Blank cartridge (definition) D.1.3
Body hit effect (definition) D.1.4
Bridgewire (definition) D.1.5
Bullet hit (definition) D.1.6
Bullet hit effect (definition) D.1.7
Bureau of Alcohol, Tobacco, and Firearms regulations 8.5.3.1

-C-

Circuit testers 8.3.1
Colored smoke (definition) D.1.8
Color pot (definition) D.1.9
Combustible (definition) 3.3.8
Comets 8.2.10
  Definition 3.3.9, A.3.3.9
Communications 8.3.5
Concussion effect (definition) 3.3.10
Concussion flashpowder (definition) D.1.10, D.1.30
Concussion mortar 8.2.2.4, 8.3.7, 8.4.2
  Definition 3.3.11
Consumer fireworks 1.3.8
  Definition D.1.11

-D-

Definitions ..... Chap. 3, Annex D
Deflagration (definition) D.1.12
Demonstration, pyrotechnics 6.4
Det cord (definition) D.1.13
Detonation (definition) D.1.14
Detonator (definition) D.1.15
Direct current (definition) D.1.16
Display fireworks (definition) D.1.17

-E-

Egress, paths of 8.6.6
Electrical equipment
  Converted 8.2.2.4
  Inspection requirements ..... B.1(4)
Electrical firing systems 7.3.2, 8.3.4, A.8.3.4
  Definition 3.3.13, A.3.3.13
Electrical isolation .....*see* Isolated power supply
Electric match (definition) 3.3.12, A.3.3.12
Equivalency to standard 1.5
Excess mixed material, handling of 5.1.2, 8.7.5
Exits
  Inspection requirements ..... B.1(2)
  Signs 8.6.6
Explosion (definition) D.1.18
Explosives 1.3.9, A.1.3.9
  Definition D.1.19
Explosive special effect .....*see* Pyrotechnic special effects
Extinguishers, portable fire 8.1.1, 8.1.2, A.8.1.1
Extra-Fast Flash .....*see* Sonic Flash

-F-

Fallout area ..... 6.3.2(16), 8.2.1.2, 8.2.11
  Definition 3.3.16, A.3.3.16
Fallout radius ..... 6.3.2(11), 8.4.1, A.8.4.1
  Definition 3.3.17, A.3.3.17
Falls .....*see* Waterfalls
Fire alarm and detection systems ..... 6.4.3, 8.1.6, 8.7.6, A.8.1.6.1(3)
Fire department 6.4.3.1
Fire protection ..... 8.1, A.8.1.1, A.8.1.6.1(3)
Fire (verb)/firing
  Definition 3.3.18
  Inspection of system ..... B.1(4)(c)
  Post-performance 8.7.1
  Prerequisites 8.2, A.8.2.1
  Safeguards 8.3, A.8.3
Fire watch ..... 8.1.6.1(3), 8.7.7, A.8.1.6.1(3)
Fireworks
  Consumer
    Definition D.1.11
  Definition D.1.20
  Display (definition) D.1.17
First fire (definition) D.1.21
Fixed production (definition) 3.3.19
Flameproofing ..... B.1(5)
Flame retardancy ..... 6.3.2(15), 6.3.2(16)
Flammable (definition) 3.3.20, A.3.3.20
Flares 8.2.9
  Definition 3.3.21
Flash pots 8.2.2.4, 8.2.5
  Definition 3.3.22

--`,,```,-`-`,,`,,`,`,,`---

Copyright National Fire Protection Association
Provided by IHS under license with NFPA
No reproduction or networking permitted without license from IHS

Not for Resale

Flashpowder
Concussion (definition) D.1.10
Definition 3.3.23
Photoflash (definition) D.1.24
Sparkle (definition) D.1.31
Theatrical (definition) D.1.35
Fuel (definition) 3.3.24, A.3.3.24

-G-

Gerb (definition) 3.3.25

-H-

Hazardous debris (definition) 3.3.26, A.3.3.26
Heat source, separation distance from 5.3
Holders 8.2.4
Definition 3.3.27, A.3.3.27

-I-

Igniter (definition) 3.3.28
Indoor use ..... 1.1, 1.2.2, 1.3.3, 6.4.3, 7.1(4), 8.2.12, A.7.1(4)
Binary systems 7.4.2
Identification ..... 7.2.1(4), 8.2.12, A.7.2.1(4)
Ingredient (definition) 3.3.29, A.3.3.29
Inspection requirements ..... Annex B
Instructions, product ..... 7.1(5), 7.2.3
For disposal 8.7.1.2, 8.7.2, 8.7.5
Pyrotechnic equipment 7.3
Integral mortar (definition) 3.3.30
Interlock 8.3.3
Isolated power supply 8.3.2
Definition 3.3.31, A.3.3.31

-L-

Labeled (definition) 3.2.3
Licensing requirements, operators ..... 6.3.2(8), Annex C
***Life Safety Code*, applicability of** 1.3.13
Life safety systems ..... 6.4.3, 8.1.6, 8.7.6, A.8.1.6.1(3)
Lift charge (definition) 3.3.32, A.3.3.32
Line rockets 8.2.8
Definition 3.3.33
Listed (definition) 3.2.4, A.3.2.4
Lycopodium (definition) D.1.22

-M-

Magazine (definition) 3.3.34
Manufacturers .....*see* Pyrotechnic manufacturers
Material safety data sheets (MSDS) ..... 6.3.2(14), 7.1(3)
Mines 8.2.10
Definition 3.3.35, A.3.3.35
Mortars 8.2.5
Concussion 8.2.2.4, 8.3.7, 8.4.2
Definition 3.3.11
Definition 3.3.36
Integral (definition) 3.3.30

-N-

Nonelectric detonator (definition) D.1.23

-O-

Open flame, separation distance from 5.3
Operators, pyrotechnic .....*see* Pyrotechnic operators (special effects operators)
Outdoor use ..... 1.1, 1.2.2, 1.3.4.1, A.7.1(4)
Oxidizers A.5.1.1
Definition 3.3.37

-P-

Park curtains .....*see* Waterfalls
Performances 8.5.4, 8.5.5.3, 8.6
Definition 3.3.38, A.3.3.38
Requirements after 8.7
Performers 1.1, 1.2.2, 1.3.1, 8.2.2.3, 8.2.8.1, 8.5.5.3, 8.6.1, 8.6.4, 8.6.5, A.1.3.1
Clothing, flame retardancy of ..... 6.3.2(16)
Definition 3.3.39, A.3.3.39
Permit requirements ..... 1.2.2.2, 6.1 to 6.4, A.6.3.3
Permittee (definition) 3.3.40, A.3.3.40
Personnel ...*see* Assistants; Performers; Pyrotechnic operators (special effects operators); Support personnel
Photoflash flashpowder (definition) D.1.24
Plans, pyrotechnics 6.2, 6.3, A.6.3.3
Portable fire-fighting equipment 8.1.1, 8.1.2, A.8.1.1
Power sources ..... 8.3.2, A.8.3, B.1(4)(b)
Preload (definition) 3.3.41
Preparation room 8.1.3
Producers 6.1.4
Definition 3.3.42, A.3.3.42
Product information ..... 7.1, A.7.1(4)
Production
Definition 3.3.43, A.3.3.43
Fixed (definition) 3.3.19
Touring (definition) 3.3.55
Protective clothing 8.5.7, A.8.5.7
Proximate audience ..... 1.1, 1.2.2, 1.3.1, 6.3.2(11), 6.4.2, 8.2.8.1, 8.2.10, 8.2.13, 8.3.7, 8.6.5, A.1.3.1
Definition 3.3.44
Separation distances for 8.4, A.8.4.1
Purpose of standard 1.2
Pyrotechnic devices
Definition 3.3.45
Disposal of 8.7.1.2, 8.7.2
Firing 8.2, 8.3, A.8.2.1, A.8.3
Post-performance 8.7.1
Identification of ..... 7.2, A.7.2.1(4)
Inspection requirements ..... B.1(3)
Mounting 8.2.1, A.8.2.1
Placement and wiring of 8.6.4
Power sources ..... 8.3.2, B.1(4)(b)
Product information ..... 7.1, A.7.1(4)
Safety precautions 8.5, A.8.5.7
Separation distances 8.4.1, A.8.4.1
Storage of ..... Chap. 5
Transportation of 4.1
In-transit storage requirements 5.2
Pyrotechnic equipment 7.3
Pyrotechnic manufacturers
Definition 3.3.46, A.3.3.46
Requirements for ..... 1.3.2, Chap. 7
Pyrotechnic materials (pyrotechnic special effects materials)
Definition 3.3.47, A.3.3.47
Disposal of 8.7.1.2, 8.7.2
Firing 8.2, A.8.2.1
Post-performance 8.7.1
Inspection requirements ..... B.1(3)
Product information ..... 7.1, A.7.1(4)
Safety precautions 8.5, A.8.5.7
Storage of ..... Chap. 5
Transportation of ..... Chap. 4
In-transit storage requirements 5.2
Pyrotechnic operators (special effects operators) ..... 6.3.2(4)
Approval by 8.1.3, 8.5.5.3
Communications 8.3.5.1, 8.3.5.2
Definition 3.3.48, A.3.3.48
Duties of 8.2.2.2, 8.2.5, 8.3.8, 8.6.3, 8.6.5, 8.7.1.1, 8.7.3
Impairment of 8.1.5
Licensing requirements ..... 6.3.2(8), Annex C
Product information for ..... 7.1, 7.3, A.7.1(4)

Copyright National Fire Protection Association
Provided by IHS under license with NFPA
No reproduction or networking permitted without license from IHS
Not for Resale

Protective clothing 8.5.7, A.8.5.7
Qualifications of ..... 6.3.2(6) to 6.3.2(8), 6.3.2(10), 6.5.1
Pyrotechnics (definition) 3.3.50
Pyrotechnics demonstration 6.4
Pyrotechnic special effects ... 8.2.2.3.1, 8.2.2.3.2, 8.3.6, A.8.3.6; *see also* Pyrotechnic materials (pyrotechnic special effects materials)
Definition 3.3.49
Pyrotechnics plans 6.2, 6.3, A.6.3.3

-Q-

Qualifications of operators and assistants ..... 6.3.2(6) to 6.3.2(8), 6.3.2(10), 6.5
Quick match (definition) D.1.25

-R-

References ..... Chap. 2, Annex E
Rehearsal 1.3.6, 8.5.4, 8.5.5.3
Definition 3.3.51
Retroactivity of standard 1.4
Rockets 8.2.8
Model rockets and motors ..... 1.3.15 to 1.3.18, A.1.3.16

-S-

Safety fuse (definition) D.1.26
Safety precautions 8.5, A.8.5.7
Firing 8.3, A.8.3
Salute powder (definition) D.1.30
Saxons 8.2.7
Definition 3.3.52
Scope of standard 1.1
Security staff 8.2.6
Separation distances
For audience 8.4, A.8.4.1
From heat source or open flame 5.3
Shall (definition) 3.2.5
Shipping containers 8.5.2
Should (definition) 3.2.6
Smoke, colored (definition) D.1.8
Smoke control 8.6.6
Smoke detection .....*see* Fire alarm and detection systems
Smoke pot (definition) D.1.28
Smoking restrictions 8.5.5
Soft detonator (definition) D.1.29
Sonic flash D.1.30
Sparkle flashpowder (definition) D.1.31
Sparkle pot (definition) D.1.32
Special effects .....*see also* Pyrotechnic materials (pyrotechnic special effects materials); Pyrotechnic operators (special effects operators); Pyrotechnic special effects
Definition 3.3.53, A.3.3.53
Squib (definition) D.1.33
Standard (definition) 3.2.7
Stars (definition) D.1.34
Storage, of pyrotechnic materials and devices ..... Chap. 5
Binary systems 8.7.5
Bureau of Alcohol, Tobacco, and Firearms regulations 8.5.3.1
Closed truck, use of 8.5.3.2
Lockable 8.1.3, 8.1.4
Plan for ..... 6.3.2(13)
Post-performance 8.7.2, 8.7.4
Removal from storage 5.2, 8.5.4
Supervision 5.2.3
Support personnel 1.1, 1.2.2, 1.3.1, 8.2.8.1, 8.3.7, 8.7.1.1, A.1.3.1
Definition 3.3.54, A.3.3.54
Impairment of 8.1.5
During performance 8.6.1, 8.6.4, 8.6.5

-T-

Theatrical flashpowder (definition) D.1.35
Touring production (definition) 3.3.55
Training, application to 1.3.12, A.1.3.12
Transformers, isolation 8.3.2.2, 8.3.2.3
Transportation of pyrotechnic materials ..... Chap. 4
In-transit storage requirements 5.2, 8.7.4

-U-

Use of pyrotechnics ..... Chap. 8

-V-

Venue manager 6.1.4, 8.1.3
Definition 3.3.56

-W-

Warning signal lights 8.3.6, A.8.3.6
Waterfalls 8.2.11
Definition 3.3.57
Wheels 8.2.7
Definition 3.3.58

Copyright National Fire Protection Association
Provided by IHS under license with NFPA
No reproduction or networking permitted without license from IHS
Not for Resale

Sequence of Events Leading to Publication of an NFPA Committee Document

Call goes out for proposals to amend existing document or for recommendations on new document.

▼

Committee meets to act on proposals, to develop its own proposals, and to prepare its report.

▼

Committee votes on proposals by letter ballot. If two-thirds approve, report goes forward. Lacking two-thirds approval, report returns to committee.

▼

Report — *Report on Proposals* (ROP) — is published for public review and comment.

▼

Committee meets to act on each public comment received.

▼

Committee votes on comments by letter ballot. If two-thirds approve, supplementary report goes forward. Lacking two-thirds approval, supplementary report returns to committee.

▼

Supplementary report — *Report on Comments* (ROC) — is published for public review.

▼

NFPA membership meets (Annual or Fall Meeting) and acts on committee report (ROP or ROC).

▼

Committee votes on any amendments to report approved at NFPA Annual or Fall Meeting.

▼

Appeals to Standards Council on Association action must be filed within 20 days of the NFPA Annual or Fall Meeting.

▼

Standards Council decides, based on all evidence, whether or not to issue standard or to take other action, including upholding any appeals.

Committee Membership Classifications

The following classifications apply to Technical Committee members and represent their principal interest in the activity of the committee.

M *Manufacturer:* A representative of a maker or marketer of a product, assembly, or system, or portion thereof, that is affected by the standard.

U *User:* A representative of an entity that is subject to the provisions of the standard or that voluntarily uses the standard.

I/M *Installer/Maintainer:* A representative of an entity that is in the business of installing or maintaining a product, assembly, or system affected by the standard.

L *Labor:* A labor representative or employee concerned with safety in the workplace.

R/T *Applied Research/Testing Laboratory:* A representative of an independent testing laboratory or independent applied research organization that promulgates and/or enforces standards.

E *Enforcing Authority:* A representative of an agency or an organization that promulgates and/or enforces standards.

I *Insurance:* A representative of an insurance company, broker, agent, bureau, or inspection agency.

C *Consumer:* A person who is, or represents, the ultimate purchaser of a product, system, or service affected by the standard, but who is not included in the *User* classification.

SE *Special Expert:* A person not representing any of the previous classifications, but who has a special expertise in the scope of the standard or portion thereof.

NOTES:

1. "Standard" connotes code, standard, recommended practice, or guide.
2. A representative includes an employee.
3. While these classifications will be used by the Standards Council to achieve a balance for Technical Committees, the Standards Council may determine that new classifications of members or unique interests need representation in order to foster the best possible committee deliberations on any project. In this connection, the Standards Council may make such appointments as it seems appropriate in the public interest, such as the classification of "Utilities" in the National Electrical Code Committee.
4. Representatives of subsidiaries of any group are generally considered to have the same classification as the parent organization.

Copyright National Fire Protection Association
Provided by IHS under license with NFPA
No reproduction or networking permitted without license from IHS
Not for Resale

NFPA Technical Committee Document Proposal Form

Note: All proposals must be received by 5:00 p.m. EST/EDST on the published proposal closing date.

For further information on the standards-making process, please contact Codes and Standards Administration at 617-984-7249. For technical assistance, please call NFPA at 617-770-3000.

FOR OFFICE USE ONLY
Log #: _____
Date Rec'd: _____

Please indicate in which format you wish to receive your ROP/ROC: ☐ **CD ROM** ☐ **paper** ☐ **download**
(Note: In choosing the download option you intend to view the ROP/ROC from our Website. No copy will be sent to you.)

Date 12/18/02 **Name** John B. Smith **Telephone** 617-555-1212
Company _____
Address 9 Seattle St. **City** Seattle **State** WA **Zip** 02255
Please indicate organization represented (if any) Fire Marshals Assn. of North America

1. **a) NFPA Document Title** National Fire Alarm Code
   b) NFPA No. & Edition NFPA 72, 2002 ed. **c) Section/Paragraph** 4.4.7.1.1

2. **Proposal Recommends:** *(check one)* ☐ **new text** ☐ **revised text** ☒ **deleted text**

3. **Proposal.** *(Include proposed new or revised wording, or identification of wording to be deleted.)* Note: Proposed text should be in legislative format, that is, use underscore to denote wording to be inserted (inserted wording) and strike-through to denote wording to be deleted (~~deleted wording~~). Delete exception.

4. **Statement of Problem and Substantiation for Proposal.** Note: State the problem that will be resolved by your recommendation. Give the specific reason for your proposal including copies of tests, research papers, fire experience, etc. If more than 200 words, it may be abstracted for publication. A properly installed and maintained system should be free of ground faults. The occurrence of one or more ground faults should be required to cause a "trouble" signal because it indicates a condition that could contribute to future malfunction of the system. Ground fault protection has been widely available on these systems for years and its cost is negligible. Requiring it on all systems will promote better installations, maintenance and reliability.

5. ☒ **This Proposal is Original Material.** Note: Original material is considered to be the submitter's own idea based on or as a result of his/her own experience, thought, or research and, to the best of his/her knowledge, is not copied from another source.

   ☐ **This Proposal is Not Original Material; Its Source** ***(if known)*** **is as Follows:** _____

Sample

I hereby grant the NFPA all and full rights in copyright to this proposal, and I understand that I acquire no rights in any publication of NFPA in which this proposal in this or another similar or analogous form is used.

Signature ***(Required)*** John B. Smith

PLEASE USE SEPARATE FORM FOR EACH PROPOSAL • NFPA FAX (617) 770-3500

Mail to: Secretary, Standards Council • NFPA • 1 Batterymarch Park • PO Box 9101 • Quincy, MA 02269-9101

Copyright National Fire Protection Association
Provided by IHS under license with NFPA
No reproduction or networking permitted without license from IHS
Not for Resale

NFPA Technical Committee Document Proposal Form

Note: All proposals must be received by 5:00 p.m. EST/EDST on the published proposal closing date.

For further information on the standards-making process, please contact Codes and Standards Administration at 617-984-7249. For technical assistance, please call NFPA at 617-770-3000.

FOR OFFICE USE ONLY
Log #: _____
Date Rec'd: _____

Please indicate in which format you wish to receive your ROP/ROC: ☐ **CD ROM** ☐ **paper** ☐ **download**
(Note: In choosing the download option you intend to view the ROP/ROC from our Website. No copy will be sent to you.)

Date _____ **Name** _____ **Telephone** _____
Company _____
Address _____ **City** _____ **State** _____ **Zip** _____
Please indicate organization represented (if any) _____

1. **a) NFPA Document Title** _____
   b) NFPA No. & Edition _____ **c) Section/Paragraph** _____

2. **Proposal Recommends:** *(check one)* ☐ **new text** ☐ **revised text** ☐ **deleted text**

3. **Proposal.** *(Include proposed new or revised wording, or identification of wording to be deleted.)* Note: Proposed text should be in legislative format, that is, use underscore to denote wording to be inserted (inserted wording) and strike-through to denote wording to be deleted (~~deleted wording~~). _____

4. **Statement of Problem and Substantiation for Proposal.** Note: State the problem that will be resolved by your recommendation. Give the specific reason for your proposal including copies of tests, research papers, fire experience, etc. If more than 200 words, it may be abstracted for publication. _____

5. ☐ **This Proposal is Original Material.** Note: Original material is considered to be the submitter's own idea based on or as a result of his/her own experience, thought, or research and, to the best of his/her knowledge, is not copied from another source.

   ☐ **This Proposal is Not Original Material; Its Source *(if known)* is as Follows:** _____

I hereby grant the NFPA all and full rights in copyright to this proposal, and I understand that I acquire no rights in any publication of NFPA in which this proposal in this or another similar or analogous form is used.

Signature *(Required)* _____

PLEASE USE SEPARATE FORM FOR EACH PROPOSAL • NFPA FAX (617) 770-3500

Mail to: Secretary, Standards Council • NFPA • 1 Batterymarch Park • PO Box 9101 • Quincy, MA 02269-9101

--`,,```,,-`-`,,`,,`,`,,`---

Copyright National Fire Protection Association
Provided by IHS under license with NFPA
No reproduction or networking permitted without license from IHS

Not for Resale