NFPA 1124

Code for the Manufacture, Transportation, Storage, and Retail Sales of Fireworks and Pyrotechnic Articles

2006 Edition

NFPA, 1 Batterymarch Park, Quincy, MA 02169-7471
An International Codes and Standards Organization

Copyright National Fire Protection Association
Provided by IHS under license with NFPA
No reproduction or networking permitted without license from IHS
Not for Resale

IMPORTANT NOTICES AND DISCLAIMERS CONCERNING NFPA DOCUMENTS

NOTICE AND DISCLAIMER OF LIABILITY CONCERNING THE USE OF NFPA DOCUMENTS

NFPA codes, standards, recommended practices, and guides, of which the document contained herein is one, are developed through a consensus standards development process approved by the American National Standards Institute. This process brings together volunteers representing varied viewpoints and interests to achieve consensus on fire and other safety issues. While the NFPA administers the process and establishes rules to promote fairness in the development of consensus, it does not independently test, evaluate, or verify the accuracy of any information or the soundness of any judgments contained in its codes and standards.

The NFPA disclaims liability for any personal injury, property or other damages of any nature whatsoever, whether special, indirect, consequential or compensatory, directly or indirectly resulting from the publication, use of, or reliance on this document. The NFPA also makes no guaranty or warranty as to the accuracy or completeness of any information published herein.

In issuing and making this document available, the NFPA is not undertaking to render professional or other services for or on behalf of any person or entity. Nor is the NFPA undertaking to perform any duty owed by any person or entity to someone else. Anyone using this document should rely on his or her own independent judgment or, as appropriate, seek the advice of a competent professional in determining the exercise of reasonable care in any given circumstances.

The NFPA has no power, nor does it undertake, to police or enforce compliance with the contents of this document. Nor does the NFPA list, certify, test or inspect products, designs, or installations for compliance with this document. Any certification or other statement of compliance with the requirements of this document shall not be attributable to the NFPA and is solely the responsibility of the certifier or maker of the statement.

--`,,```,-`-`,,`,,`,`,,`---

Copyright National Fire Protection Association
Provided by IHS under license with NFPA
No reproduction or networking permitted without license from IHS

Not for Resale

ADDITIONAL NOTICES AND DISCLAIMERS

Updating of NFPA Documents

Users of NFPA codes, standards, recommended practices, and guides should be aware that these documents may be superseded at any time by the issuance of new editions or may be amended from time to time through the issuance of Tentative Interim Amendments. An official NFPA document at any point in time consists of the current edition of the document together with any Tentative Interim Amendments and any Errata then in effect. In order to determine whether a given document is the current edition and whether it has been amended through the issuance of Tentative Interim Amendments or corrected through the issuance of Errata, consult appropriate NFPA publications such as the National Fire Codes® Subscription Service, visit the NFPA website at www.nfpa.org, or contact the NFPA at the address listed below.

Interpretations of NFPA Documents

A statement, written or oral, that is not processed in accordance with Section 6 of the Regulations Governing Committee Projects shall not be considered the official position of NFPA or any of its Committees and shall not be considered to be, nor be relied upon as, a Formal Interpretation.

Patents

The NFPA does not take any position with respect to the validity of any patent rights asserted in connection with any items which are mentioned in or are the subject of NFPA codes, standards, recommended practices, and guides, and the NFPA disclaims liability for the infringement of any patent resulting from the use of or reliance on these documents. Users of these documents are expressly advised that determination of the validity of any such patent rights, and the risk of infringement of such rights, is entirely their own responsibility.

NFPA adheres to applicable policies of the American National Standards Institute with respect to patents. For further information contact the NFPA at the address listed below.

Law and Regulations

Users of these documents should consult applicable federal, state, and local laws and regulations. NFPA does not, by the publication of its codes, standards, recommended practices, and guides, intend to urge action that is not in compliance with applicable laws, and these documents may not be construed as doing so.

Copyrights

This document is copyrighted by the NFPA. It is made available for a wide variety of both public and private uses. These include both use, by reference, in laws and regulations, and use in private self-regulation, standardization, and the promotion of safe practices and methods. By making this document available for use and adoption by public authorities and private users, the NFPA does not waive any rights in copyright to this document.

Use of NFPA documents for regulatory purposes should be accomplished through adoption by reference. The term "adoption by reference" means the citing of title, edition, and publishing information only. Any deletions, additions, and changes desired by the adopting authority should be noted separately in the adopting instrument. In order to assist NFPA in following the uses made of its documents, adopting authorities are requested to notify the NFPA (Attention: Secretary, Standards Council) in writing of such use. For technical assistance and questions concerning adoption of NFPA documents, contact NFPA at the address below.

For Further Information

All questions or other communications relating to NFPA codes, standards, recommended practices, and guides and all requests for information on NFPA procedures governing its codes and standards development process, including information on the procedures for requesting Formal Interpretations, for proposing Tentative Interim Amendments, and for proposing revisions to NFPA documents during regular revision cycles, should be sent to NFPA headquarters, addressed to the attention of the Secretary, Standards Council, NFPA, 1 Batterymarch Park, P.O. Box 9101, Quincy, MA 02269-9101.

For more information about NFPA, visit the NFPA website at www.nfpa.org.

--`,,```,-`-`,,`,,`,`,,`---

Copyright National Fire Protection Association
Provided by IHS under license with NFPA
No reproduction or networking permitted without license from IHS
Not for Resale

Copyright © 2005, National Fire Protection Association, All Rights Reserved

NFPA 1124

Code for the

Manufacture, Transportation, Storage, and Retail Sales of Fireworks and Pyrotechnic Articles

2006 Edition

This edition of NFPA 1124, *Code for the Manufacture, Transportation, Storage, and Retail Sales of Fireworks and Pyrotechnic Articles*, was prepared by the Technical Committee on Pyrotechnics and acted on by NFPA at its June Association Technical Meeting held June 6–10, 2005, in Las Vegas, NV. It was issued by the Standards Council on July 29, 2005, with an effective date of August 18, 2005, and supersedes all previous editions.

This edition of NFPA 1124 was approved as an American National Standard on August 18, 2005.

Origin and Development of NFPA 1124

NFPA 44A was originally developed by the Technical Committee on Explosives of the NFPA Committee on Chemicals and Explosives. It was adopted as a Tentative Code at the 1972 NFPA Annual Meeting. It was further revised and officially adopted at the 1973 NFPA Annual Meeting. A revised edition was adopted in 1974.

In 1980, the Technical Committee on Explosives and the Committee on Pyrotechnics voted to transfer responsibility for NFPA 44A to the Committee on Pyrotechnics. The Correlating Committee on Chemicals and Explosives concurred and petitioned the NFPA Standards Council to effect the change. The Standards Council approved the change in June 1981.

The 1984 edition of NFPA 1124 was the result of a complete review of the 1974 edition of NFPA 44A by the Committee on Pyrotechnics, including the redesignation of the document as NFPA 1124 for consistency with the designations for other documents relating to pyrotechnics.

The 1988 edition of NFPA 1124 was the result of a thorough review of and partial revision to the 1984 edition of NFPA 1124 by the Technical Committee on Pyrotechnics, including reference updating and incorporation of the latest separation distances as approved by the Institute of Makers of Explosives in May 1983. It included new provisions for salute manufacturing and storage of salute powder.

The 1995 edition of NFPA 1124 included partial amendments to the document and editorial revisions, improving its ability to be used, adopted, and enforced and making it conform with the NFPA *Manual of Style*. The Committee incorporated the latest separation distances as approved by the Institute of Makers of Explosives in June 1991. The Committee also updated the definitions of fireworks to be consistent with the new terminology used in the U.S. Department of Transportation regulations that incorporated the United Nations shipping designations for fireworks (explosives).

For the 1998 edition, the requirements for fireworks laboratories were clarified by the addition of a definition and clarification of the storage and separation distances that are appropriate for them. The Committee added an appendix that extracts language from the American Pyrotechnics Association Standard 87-1 to provide users of this document with the approved definitions used in the Federal Regulations for fireworks, novelties, and theatrical pyrotechnics.

The 1998 edition incorporated amendments to the separation distances for fireworks manufacturing plants based upon gross weight. Amendments to Chapter 4 clarified the storage requirements for manufacturing facilities and provided requirements for storage at nonmanufacturing facilities such as warehouses and distribution facilities.

In 1999, the NFPA Board of Directors revised its policy in order to permit the Technical Committee on Pyrotechnics to develop provisions for the retail sales and storage of consumer fireworks, subject to Standards Council oversight. At the same time, the Board reaffirmed its support of the Model Fireworks Law, which, since 1938, prohibits use of consumer fireworks.

Copyright National Fire Protection Association
Provided by IHS under license with NFPA
No reproduction or networking permitted without license from IHS
Not for Resale

Although NFPA's Public Education position has continued to advocate against any use of consumer fireworks, it is believed that in the interest of public safety, NFPA standards for the retail sales and storage of consumer fireworks should be available in those jurisdictions where such sales are permitted.

As a result of the Board of Directors decision, the 2003 edition incorporated new provisions dealing with the distribution and retail sales of consumer fireworks. The code then addressed the fire and life safety requirements for construction, siting and separation distances, and storage and display layout for both permanent and temporary consumer fireworks retail sales facilities. It contained a completely revised Chapter 6 on distribution facilities and a new Chapter 7 on consumer fireworks retail sales facilities. The code was also revised to reflect the *Manual of Style for NFPA Technical Committee Documents*.

The 2006 edition features a reorganization of Chapter 7 that brings the requirements for consumer fireworks retail sales (CFRS) facilities, stores, and tents and stands into separate, comprehensive sections. The code has also added a requirement that all consumer fireworks undergo third-party testing and certification. The Committee also revised definitions to make them consistent with NFPA 1123, *Code for Fireworks Display*.

Copyright National Fire Protection Association
Provided by IHS under license with NFPA
No reproduction or networking permitted without license from IHS
Not for Resale

Technical Committee on Pyrotechnics

James K. Lathrop, *Chair*
Koffel Associates, Inc., CT [SE]

Kenneth L. Kosanke, *Secretary*
PyroLabs, Incorporated, CO [SE]

Thomas G. Arnold, Lancaster Bureau of Fire, PA [E]
Dane Boles, Quest Aerospace, Inc., AZ [M]
Richard Bowes, Natural Resources Canada, Canada [RT]
W. G. Bulifant, III, Dominion Fireworks, Inc., VA [U]
Jose R. Colon, Connecticut Department of Public Safety, CT [E]
Rep. International Fire Marshals Association
John A. Conkling, Chestertown, MD [SE]
Randall W. A. Davidson, Risk International & Associates, CA [SE]
Vernon Estes, Canon City, CO [SE]
Gary A. Fadorsen, Pyrotech International Inc., OH [IM]
Phil Grucci, Fireworks by Grucci, Inc., NY [M]
Garry Hanson, Precocious Pyrotechnics, Inc., MN [M]
Rep. National Fireworks Association
Julie L. Heckman, American Pyrotechnics Association, MD [M]
Rep. American Pyrotechnics Association
Lansden E. Hill, Jr., E. E. Hill & Son, Inc./Pyro Shows, TN [U]
Robert J. James, City of Bloomington, MN [E]
Rep. Fire Prevention Code Committee
Bruce E. Kelly, Tripoli Rocketry Association, Inc., UT [U]
Rep. Tripoli Rocketry Association, Inc.
John Kitchens, City of Los Angeles Fire Department, CA [E]
Gerald R. Laib, U.S. Department of the Navy, MD [SE]
Peter M. Lamb, Town of Newport Fire-EMS, NH [E]
Joshua Lazarus, State of New Jersey, NJ [E]
J. Patrick Miller, Hardin-Simmons University, TX [U]
Rep. National Association of Rocketry
David J. Pier, MP Associates, Inc., CA [M]
Michael W. Platt, High Power Rocket Manufacturing Dealers Assn., WV [M]
Rep. High Power Rocket Manufacturing Dealers Assn.
Mary Roberts, Estes Industries, CO [M]
Gary C. Rosenfield, Industrial Solid Propulsion (ISP), UT [M]
David S. Shatzer, U.S. Bureau of Alcohol, Tobacco, Firearms and Explosives, DC [E]
James R. Souza, Pyro Spectaculars, Inc., CA [U]
John R. Steinberg, Pyrotechnics Guild International, Inc., MD [U]
Rep. Pyrotechnics Guild International, Inc.
Lawrence Weinman, Luna Tech/Schneier-Weinman Consultants, AL [M]
Dan Westcott, Gadsden Fire Department, AL [E]
Rep. NFPA Fire Service Section

Alternates

Arthur H. Barber, III, Springfield, VA [SE]
(Alt. to V. Estes)
Scott Bartel, Black Sky Research, CA [U]
(Alt. to B. E. Kelly)
Gary E. Brown, Pyro Spectaculars, Inc., CA [U]
(Alt. to J. R. Souza)
Kevin T. Brueckner, Fireworks and Stage FX America, Inc., CA [M]
(Alt. to G. Hanson)
Mark B. Bundick, First Chicago Capital Markets, IL [U]
(Alt. to J. P. Miller)
Steve A. Coman, RES Specialty Pyrotechnics Inc., MN [U]
(Alt. to J. R. Steinberg)
Ettore Contestabile, Natural Resources Canada, Canada [RT]
(Alt. to R. Bowes)
H. Stephen Frantz, Western Enterprises, Inc., OK [U]
(Alt. to L. E. Hill, Jr.)
Felix J. Grucci, Jr., Fireworks by Grucci, Inc., NY [M]
(Alt. to P. Grucci)
Alfred J. Hogan, Reedy Creek Improvement District, FL [E]
(Alt. to P. M. Lamb)
Bonnie J. Kosanke, Journal of Pyrotechnics, Inc., CO [SE]
(Alt. to K. L. Kosanke)
Larry Mars, MP Associates, Inc., CA [M]
(Alt. to D. J. Pier)
Mark C. Orellana, Penn Township, Indiana Fire Department, IN [E]
(Alt. to J. R. Colon)
Brennan S. Phillips, U.S. Department of Justice, WA [E]
(Alt. to D. S. Shatzer)
Bill Stine, Quest Aerospace, Inc., AZ [M]
(Alt. to D. Boles)
Tad A. Trout, American Promotional Events, Inc., CA [U]
(Alt. to W. G. Bulifant, III)
Gerald D. Ward, Bethany Fire District, IL [E]
(Alt. to D. Westcott)
Charles P. Weeth, Weeth & Associates, LLC, WI [SE]
(Alt. to G. R. Laib)
William A. Weimer, B. J. Alan Company, OH [M]
(Alt. to L. Weinman)

Copyright National Fire Protection Association
Provided by IHS under license with NFPA
No reproduction or networking permitted without license from IHS
Not for Resale

Nonvoting

Joseph A. Domanico, U.S. Department of the Army, MD [RT]
Mark W. Hagemann, U.S. Department of Labor, DC [E]
Rep. Occupational Safety & Health Administration
Gary Zeller, Zeller International, NY [E]

Guy R. Colonna, NFPA Staff Liaison

This list represents the membership at the time the Committee was balloted on the final text of this edition. Since that time, changes in the membership may have occurred. A key to classifications is found at the back of the document.

NOTE: Membership on a committee shall not in and of itself constitute an endorsement of the Association or any document developed by the committee on which the member serves.

Committee Scope: This Committee shall have primary responsibility for documents on the manufacture, transportation, and storage of consumer and display fireworks, pyrotechnic special effects, and model and high power rocket motors. This Committee shall have primary responsibility for the use of display fireworks and for model and high power rocketry, and the construction, launching, and other operations that involve model and high power rocket motors. The Committee shall have primary responsibility for documents on the wholesale and retail sale and storage of consumer fireworks.

The Committee does not have responsibility for documents on the use of consumer fireworks by the general public; on the use of pyrotechnic special effects before a proximate audience; on the manufacture, transportation, storage for use of military, automotive, agricultural, and industrial pyrotechnics.

Copyright National Fire Protection Association
Provided by IHS under license with NFPA
No reproduction or networking permitted without license from IHS
Not for Resale

Contents

Chapter 1 Administration 1124– 6
1.1 Scope 1124– 6
1.2 Purpose 1124– 6
1.3 Application 1124– 6
1.4 Retroactivity 1124– 7
1.5 Equivalency 1124– 7
1.6 Enforcement 1124– 7

Chapter 2 Referenced Publications 1124– 7
2.1 General 1124– 7
2.2 NFPA Publications 1124– 7
2.3 Other Publications 1124– 7
2.4 References for Extracts in Mandatory Sections 1124– 8

Chapter 3 Definitions 1124– 8
3.1 General 1124– 8
3.2 NFPA Official Definitions 1124– 8
3.3 General Definitions 1124– 8

Chapter 4 Manufacturing Operations 1124–11
4.1 Applicability 1124–11
4.2 Permit Requirements 1124–11
4.3 Recordkeeping and Reporting 1124–11
4.4 Site Security 1124–12
4.5 Construction 1124–12
4.6 Separation Distances and Quantity Tables 1124–12
4.7 Maximum Number of Occupants and Maximum Quantity Limitations 1124–17
4.8 Operations 1124–17
4.9 Fire and Explosion Prevention 1124–17
4.10 Fire Protection and Emergency Plans 1124–18
4.11 Testing of Fireworks and Pyrotechnic Articles 1124–18
4.12 Occupancies 1124–18
4.13 Training 1124–18
4.14 Item Construction 1124–19

Chapter 5 Storage of Display Fireworks, Pyrotechnic Articles, Salute Powder, Pyrotechnic and Explosive Compositions, and Black Powder 1124–20
5.1 General Requirements 1124–20
5.2 Magazine Construction — General 1124–20
5.3 Magazine Construction — Requirements for Specific Types 1124–21
5.4 Storage Within Magazines 1124–22
5.5 Miscellaneous Safety Precautions 1124–23
5.6 Requirements for Shipping Buildings for Display Fireworks 1124–23
5.7 Shipping Buildings 1124–23

Chapter 6 Storage of Consumer Fireworks 1124–23
6.1 Applicability 1124–23
6.2 General Requirements for the Storage of Consumer Fireworks 1124–24
6.3 Permit Requirements 1124–24
6.4 Construction 1124–24
6.5 Fire Protection 1124–24
6.6 Site Requirements for Fire Department Access 1124–25
6.7 Separation Distances 1124–25
6.8 Means of Egress 1124–25
6.9 Exit Signs and Emergency Lighting 1124–26
6.10 Electrical Requirements 1124–26
6.11 Operations 1124–26
6.12 Housekeeping 1124–26
6.13 Consumer Fireworks Work Buildings, Rooms, or Areas 1124–26
6.14 Trailers, Semitrailers, and Metal Shipping Containers 1124–26

Chapter 7 Retail Sales of Consumer Fireworks ... 1124–27
7.1 Applicability 1124–27
7.2 Special Limits for Retail Sales of Consumer Fireworks 1124–27
7.3 General Requirements for All Retail Sales 1124–27
7.4 Consumer Fireworks Retail Sales (CFRS) Facility Requirements 1124–31
7.5 Stores 1124–33
7.6 Stands 1124–33

Chapter 8 Transportation on Public Highways of Fireworks, Pyrotechnic Articles, and Any Component(s) Containing Pyrotechnic or Explosive Materials 1124–34
8.1 General Requirements 1124–34

Annex A Explanatory Material 1124–34

Annex B Magazine Construction 1124–41

Annex C Extract from American Pyrotechnics Association Standard 87-1, Standard for Construction and Approval for Transportation of Fireworks, Novelties, and Theatrical Pyrotechnics 1124–41

Annex D Glossary 1124–50

Annex E DOT Explosive Materials Transport Regulations 1124–51

Annex F Sample Ordinance Adopting NFPA 1124 1124–52

Annex G Informational References 1124–54

Annex H Cross-Reference Table for Chapter 7 Reorganization 1124–55

Index 1124–59

Copyright National Fire Protection Association
Provided by IHS under license with NFPA
No reproduction or networking permitted without license from IHS
Not for Resale

NFPA 1124

Code for the

Manufacture, Transportation, Storage, and Retail Sales of Fireworks and Pyrotechnic Articles

2006 Edition

IMPORTANT NOTE: This NFPA document is made available for use subject to important notices and legal disclaimers. These notices and disclaimers appear in all publications containing this document and may be found under the heading "Important Notices and Disclaimers Concerning NFPA Documents." They can also be obtained on request from NFPA or viewed at www.nfpa.org/disclaimers.

NOTICE: An asterisk (*) following the number or letter designating a paragraph indicates that explanatory material on the paragraph can be found in Annex A.

A reference in brackets [ ] following a section or paragraph indicates material that has been extracted from another NFPA document. As an aid to the user, the complete title and edition of the source documents for extracts in mandatory sections of the document are given in Chapter 2 and those for extracts in informational sections are given in Annex G. Editorial changes to extracted material consist of revising references to an appropriate division in this document or the inclusion of the document number with the division number when the reference is to the original document. Requests for interpretations or revisions of extracted text shall be sent to the technical committee responsible for the source document.

Information on referenced publications can be found in Chapter 2 and Annex G.

Chapter 1 Administration

1.1 Scope. This code shall provide regulations for the construction, use, and maintenance of buildings and facilities for the following:

(1) The manufacture and storage of fireworks, novelties, and pyrotechnic articles at manufacturing facilities
(2) The storage of display fireworks, pyrotechnic articles, salute powder, pyrotechnic and explosive compositions, and Black Powder at other than display sites
(3) The storage of consumer fireworks at distribution facilities
(4) The retail sales and related storage of consumer fireworks in consumer fireworks retail sales (CFRS) facilities and stores
(5) The transportation on public highways of fireworks, pyrotechnic articles, and components thereof containing pyrotechnic or explosive materials

1.2 Purpose. The purpose of this code shall be to establish reasonable minimum fire and life safety requirements for the manufacture, transportation, and storage of fireworks, pyrotechnic articles, and any component(s) thereof containing pyrotechnic or explosive compositions, and in the distribution and retail sales of consumer fireworks.

1.3 Application. This code shall apply to the manufacture, transportation, and storage of fireworks, pyrotechnic articles, and any component(s) thereof containing pyrotechnic or explosive compositions, and to the distribution and retail sales of consumer fireworks.

1.3.1 This code shall also apply to the following:

(1) Testing of fireworks at a manufacturing facility
(2) Testing of pyrotechnic devices used in the entertainment industry
(3) Testing of any component(s) of fireworks or pyrotechnic devices used in the entertainment industry that contain pyrotechnic or explosive compositions

1.3.2 Use of This Code. This code is structured in a logical sequence of Chapters 4 through 8 containing specific requirements that are intended to be mutually exclusive unless specifically indicated within a chapter.

1.3.2.1 Chapter 4. Chapter 4 shall apply to the manufacturing of all types of fireworks and pyrotechnic articles at manufacturing facilities.

1.3.2.1.1 For the storage of salute powder, pyrotechnic and explosive compositions, and Black Powder used in the manufacturing of fireworks and for the storage of finished display fireworks and pyrotechnic articles, see Chapter 5.

1.3.2.1.2 For the storage of finished consumer fireworks and pyrotechnic articles classified as explosives, 1.4G (UN0336, UN0337, UN0431, and UN0432), see Chapter 6.

1.3.2.2 Chapter 5. Chapter 5 shall apply to the storage of salute powder, pyrotechnic and explosive compositions, and Black Powder used in the manufacturing of fireworks and to finished display fireworks and pyrotechnic articles not classified as explosives, 1.4G (UN0336, UN0337, UN0431, and UN0432).

1.3.2.3 Chapter 6. Chapter 6 shall apply to the storage of finished consumer fireworks at manufacturing and distribution facilities.

1.3.2.3.1 Chapter 6 shall not apply to the storage of consumer fireworks at CFRS facilities and stores.

1.3.2.3.2 For the storage of consumer fireworks related to the retail sales of consumer fireworks at CFRS facilities or stores, see Chapter 7.

1.3.2.4 Chapter 7. Chapter 7 shall apply to the retail sales of consumer fireworks to the public at CFRS facilities and stores and to the related storage of consumer fireworks at such facilities.

1.3.2.5 Chapter 8. Chapter 8 shall apply to the transportation on public highways of fireworks, pyrotechnic articles, and any component(s) containing pyrotechnic or explosive compositions or explosive materials.

1.3.3 This code shall not apply to the use of consumer fireworks by the general public.

1.3.4 This code shall not apply to the display site storage and use of fireworks and pyrotechnic articles conducted in accordance with NFPA 1123, *Code for Fireworks Display*.

1.3.5 This code shall not apply to the transportation of fireworks, pyrotechnic devices used in the entertainment industry, or any component(s) thereof containing pyrotechnic or explosive compositions, where such transportation is under the jurisdiction of the U.S. Department of Transportation (U.S. DOT) or any other national transportation authority.

1.3.6 This code shall not apply to the manufacture, transportation, or storage of model rockets or high power rockets, model

Copyright National Fire Protection Association
Provided by IHS under license with NFPA
No reproduction or networking permitted without license from IHS
Not for Resale

rocket motors or high power rocket motors, model rocket motor reloading kits or modules, or high power motor reloading kits or modules, as covered by one of the following codes:

(1) NFPA 1122, *Code for Model Rocketry*
(2) NFPA 1125, *Code for the Manufacture of Model Rocket and High Power Rocket Motors*
(3) NFPA 1127, *Code for High Power Rocketry*

1.3.7 This code shall not apply to the manufacture, transportation, and storage of fireworks by federal and state military agencies.

1.3.8 This code shall not apply to the storage of pyrotechnic devices at the site of use and the use of pyrotechnic special effects in the entertainment industry conducted in accordance with NFPA 1126, *Standard for the Use of Pyrotechnics Before a Proximate Audience*.

1.3.9 This code shall not apply to laboratories covered by NFPA 45, *Standard on Fire Protection for Laboratories Using Chemicals*.

1.3.10 This code shall not apply to fireworks or pyrotechnic articles used in conjunction with flammable gas or flammable liquid special effects conducted in accordance with NFPA 1123, *Code for Fireworks Display*, and NFPA 1126, *Standard for the Use of Pyrotechnics Before a Proximate Audience*.

1.3.11* This code shall not apply to novelties for other than their manufacture.

1.4 Retroactivity. The provisions of this code reflect a consensus of what is necessary to provide an acceptable degree of protection from the hazards addressed in this code at the time the code was issued.

1.4.1 Unless otherwise specified, the provisions of this code shall not apply to facilities, equipment, structures, or installations that existed or were approved for construction or installation prior to the effective date of the code. Where specified, the provisions of this code shall be retroactive.

1.4.2 In those cases where the authority having jurisdiction determines that the existing situation presents an unacceptable degree of risk, the authority having jurisdiction shall be permitted to apply retroactively any portions of this code deemed appropriate.

1.4.3 The retroactive requirements of this code shall be permitted to be modified if their application clearly would be impractical in the judgment of the authority having jurisdiction, and only where it is clearly evident that a reasonable degree of safety is provided.

1.5 Equivalency. Nothing in this code is intended to prevent the use of systems, methods, or devices of equivalent or superior quality, strength, fire resistance, effectiveness, durability, and safety over those prescribed by this code.

1.5.1 Technical documentation shall be submitted to the authority having jurisdiction to demonstrate equivalency.

1.5.2 The system, method, or device shall be approved for the intended purpose by the authority having jurisdiction.

1.6 Enforcement. This code shall be administered and enforced by the authority having jurisdiction designated by the governing authority. *(See Annex F for sample wording for enabling legislation.)*

Chapter 2 Referenced Publications

2.1 General. The documents or portions thereof listed in this chapter are referenced within this code and shall be considered part of the requirements of this document.

2.2 NFPA Publications. National Fire Protection Association, 1 Batterymarch Park, Quincy, MA 02169-7471.

NFPA 10, *Standard for Portable Fire Extinguishers,* 2002 edition.
NFPA 13, *Standard for the Installation of Sprinkler Systems,* 2002 edition.
NFPA 45, *Standard on Fire Protection for Laboratories Using Chemicals,* 2004 edition.
NFPA 70, *National Electrical Code®,* 2005 edition.
NFPA 72®, National Fire Alarm Code®, 2002 edition.
NFPA 80, *Standard for Fire Doors and Fire Windows,* 1999 edition.
NFPA *101®, Life Safety Code®,* 2006 edition.
NFPA 102, *Standard for Grandstands, Folding and Telescopic Seating, Tents, and Membrane Structures,* 1995 edition.
NFPA 204, *Standard for Smoke and Heat Venting,* 2002 edition.
NFPA 230, *Standard for the Fire Protection of Storage,* 2003 edition.
NFPA 255, *Standard Method of Test of Surface Burning Characteristics of Building Materials,* 2006 edition.
NFPA 256, *Standard Methods of Fire Tests of Roof Coverings,* 2003 edition.
NFPA 259, *Standard Test Method for Potential Heat of Building Materials,* 2003 edition.
NFPA 430, *Code for the Storage of Liquid and Solid Oxidizers,* 2004 edition.
NFPA 1122, *Code for Model Rocketry,* 2002 edition.
NFPA 1123, *Code for Fireworks Display,* 2006 edition.
NFPA 1125, *Code for the Manufacture of Model Rocket and High Power Rocket Motors,* 2001 edition.
NFPA 1126, *Standard for the Use of Pyrotechnics Before a Proximate Audience,* 2006 edition.
NFPA 1127, *Code for High Power Rocketry,* 2002 edition.

2.3 Other Publications.

2.3.1 APA Publication. American Pyrotechnics Association, P.O. Box 30438, Bethesda, MD 20824.

APA 87-1, *Standard for the Construction and Approval for Transportation of Fireworks, Novelties, and Theatrical Pyrotechnics*, 2001 edition.

2.3.2 ASTM Publication. American Society for Testing and Materials, 100 Barr Harbor Drive, West Conshohocken, PA 19428-2959.

ASTM E 136, *Standard Test Method for Behavior of Materials in a Vertical Tube Furnace at 750° C*, 2005.

2.3.3 Institute of Makers of Explosives Publication. Institute of Makers of Explosives, 1120 19th St., NW, Suite 310, Washington, DC 20036-3605.

American Table of Distances, *American Table of Distances for Storage of Explosives,* June, 1991.

2.3.4 U.S. Government Publications. U.S. Government Printing Office, Washington, DC 20402.

Child Safety Act of 1966.

Title XI, "Regulation of Explosives, of the Crime Control Act of 1970," 1970.

Copyright National Fire Protection Association
Provided by IHS under license with NFPA
No reproduction or networking permitted without license from IHS
Not for Resale

Title 16, *Code of Federal Regulations*, Part 1500 and Part 1507, U.S. Consumer Product Safety Commission.

Title 18, United States Code, Chapter 40, "Importation, Manufacture, Distribution, and Storage of Explosive Materials," 1970.

Title 27, *Code of Federal Regulations*, Part 555, Bureau of Alcohol, Tobacco and Firearms.

Title 29, *Code of Federal Regulations*, Part 1910.1200, "Hazard Communication," U.S. Department of Labor.

Title 49, *Code of Federal Regulations*, Part 100 to end, U.S. Department of Transportation.

2.3.5 Other Publication. *Merriam-Webster's Collegiate Dictionary*, 11th edition, Merriam-Webster, Inc., Springfield, MA, 2003.

2.4 References for Extracts in Mandatory Sections.

NFPA 495, *Explosive Materials Code,* 2006 edition.
NFPA 1123, *Code for Fireworks Display,* 2006 edition.
NFPA 1125, *Code for the Manufacture of Model Rocket and High Power Rocket Motors,* 2001 edition.
NFPA 1126, *Standard for the Use of Pyrotechnics Before a Proximate Audience,* 2006 edition.
NFPA 5000®, Building Construction and Safety Code®, 2006 edition.

Chapter 3 Definitions

3.1 General. The definitions contained in this chapter shall apply to the terms used in this code. Where terms are not defined in this chapter or within another chapter, they shall be defined using their ordinarily accepted meanings within the context in which they are used. *Merriam-Webster's Collegiate Dictionary,* 11th edition, shall be the source for the ordinarily accepted meaning.

3.2 NFPA Official Definitions.

3.2.1* Approved. Acceptable to the authority having jurisdiction.

3.2.2* Authority Having Jurisdiction (AHJ). An organization, office, or individual responsible for enforcing the requirements of a code or standard, or for approving equipment, materials, an installation, or a procedure.

3.2.3* Code. A standard that is an extensive compilation of provisions covering broad subject matter or that is suitable for adoption into law independently of other codes and standards.

3.2.4 Labeled. Equipment or materials to which has been attached a label, symbol, or other identifying mark of an organization that is acceptable to the authority having jurisdiction and concerned with product evaluation, that maintains periodic inspection of production of labeled equipment or materials, and by whose labeling the manufacturer indicates compliance with appropriate standards or performance in a specified manner.

3.2.5* Listed. Equipment, materials, or services included in a list published by an organization that is acceptable to the authority having jurisdiction and concerned with evaluation of products or services, that maintains periodic inspection of production of listed equipment or materials or periodic evaluation of services, and whose listing states that either the equipment, material, or service meets appropriate designated standards or has been tested and found suitable for a specified purpose.

3.2.6 Shall. Indicates a mandatory requirement.

3.2.7 Should. Indicates a recommendation or that which is advised but not required.

3.3 General Definitions.

3.3.1* Aerial Shell. A cartridge containing pyrotechnic composition, a burst charge, and an internal time fuse or module, that is propelled into the air from a mortar and that is intended to burst at or near apogee. [**1123**, 2006]

3.3.2 Airburst. A pyrotechnic device that is suspended in the air to simulate outdoor aerial fireworks shells without producing hazardous debris. [**1126**, 2006]

3.3.3 Area.

3.3.3.1 ***Consumer Fireworks Retail Sales (CFRS) Area.*** The portion of a consumer fireworks retail sales facility or store, including the immediately adjacent aisles, where consumer fireworks are located for the purpose of retail display and sale to the public.

3.3.3.2 ***Process Area.*** An outside area complying with the applicable provisions of this code for a process building that is used for the manufacture of fireworks and pyrotechnic articles.

3.3.4 Artificial Barricade. See 3.3.5.1.

3.3.5 Barricade. A natural or artificial barrier that effectively screens a magazine, building, railway, or highway from the effects of an explosion in a magazine or building containing explosives.

3.3.5.1 ***Artificial Barricade.*** An artificial mound or revetted wall of earth of a minimum thickness of 3 ft (0.9 m).

3.3.5.2 ***Natural Barricade.*** A natural outdoor feature(s), such as hills or trees, with a density sufficient to prevent surrounding exposures that require protection from being seen from a magazine or building containing explosives when the trees are bare of leaves.

3.3.5.3* ***Screen Barricade.*** Any barrier that contains the embers and debris from a fire or deflagration in a process building, thus preventing propagation of fire to other buildings or areas. [**1125**, 2001]

3.3.6 Binary Material. See 3.3.7, *Binary System.*

3.3.7* Binary System. A two-component pyrotechnic system. [**1126**, 2006]

3.3.8 Black Powder. See 3.3.54.1.

3.3.9 Building.

3.3.9.1* ***Consumer Fireworks Storage Building.*** A building in which finished consumer fireworks are received, stored, and shipped but in which no manufacturing is performed.

3.3.9.2* ***Consumer Fireworks Work Building, Room, or Area.*** A building, room, or area where finished consumer fireworks are picked and packaged into retail packages, including assortments and those picked and packed into DOT-approved packaging, and where related operations are performed.

3.3.9.3* ***Inhabited Building.*** Any building or structure regularly used in whole or part as a place of human habitation.

3.3.9.4* ***Mechanical Building.*** A building that contains mechanical, electrical, air-conditioning, or other equipment and that usually is connected to a process or nonprocess building.

Copyright National Fire Protection Association
Provided by IHS under license with NFPA
No reproduction or networking permitted without license from IHS
Not for Resale

3.3.9.5* ***Mixing Building.*** Any building used primarily for mixing and blending of pyrotechnic compositions.

3.3.9.6* ***Nonprocess Building.*** An office building, a warehouse, or other building or area located in a manufacturing facility in which no fireworks, pyrotechnic or explosive composition, pyrotechnic articles, or components containing pyrotechnic or explosive materials are processed or stored.

3.3.9.7* ***Process Building.*** Any building or any room at a manufacturing facility where fireworks, pyrotechnic articles, or component(s) containing explosive or pyrotechnic compositions are manufactured.

3.3.9.8 ***Shipping Building.*** A building used for the packing of assorted display fireworks or for the loading of display fireworks onto vehicles for shipment to purchasers.

3.3.9.9 ***Storage Building.*** A building, structure, or facility in which consumer fireworks in any state of processing are stored, but in which no processing or manufacturing is performed.

3.3.9.10* ***Unoccupied Building.*** A building that is normally unoccupied during its entire period of daily operations.

3.3.10 Bulk Salute. See 3.3.67.2.

3.3.11 Bulk Salute Powder. See 3.3.54.3.1.

3.3.12 Bullet-Sensitive Explosive Material. See 3.3.39.2.

3.3.13* Comet. A single pellet of pyrotechnic composition that is ignited and simultaneously propelled into the air from a mortar or tube; a comet is self-consuming as it rises into the air and can be designed to split apart. [**1123**, 2006]

3.3.14 Common Fireworks. See 3.3.30.1, *Consumer Fireworks.*

3.3.15 Composition.

3.3.15.1 ***Explosive Composition.*** Any chemical compound or mixture, the primary purpose of which is to function by explosion, producing an audible effect (report) in a fireworks device.

3.3.15.2 ***Pyrotechnic Composition.*** A chemical mixture that, upon burning, produces visible, brilliant displays, bright lights, or sounds.

3.3.15.3 ***Whistle Composition.*** A pyrotechnic composition that when pressed into a tube with an open end burns in an oscillatory manner to produce an audible effect.

3.3.16 Consumer Fireworks. See 3.3.30.1.

3.3.17 Consumer Fireworks Retail Sales (CFRS) Area. See 3.3.3.1.

3.3.18 Consumer Fireworks Retail Sales (CFRS) Facility. See 3.3.29.1.

3.3.19* Consumer Fireworks Retail Sales (CFRS) Stand. A temporary or permanent building or structure that has a floor area not greater than 800 ft^2 (74 m^2), other than tents, canopies, or membrane structures, that is used primarily for the retail display and sale of consumer fireworks to the public.

3.3.20 Consumer Fireworks Storage Building. See 3.3.9.1.

3.3.21 Consumer Fireworks Work Building, Room, or Area. See 3.3.9.2.

3.3.22* Covered Fuse. A fuse or designed point of ignition that is protected against accidental ignition by contact with a spark, smoldering items, or small open flame.

3.3.23 Display Fireworks. See 3.3.30.2.

3.3.24 Distribution Facility. See 3.3.29.2.

3.3.25* DOT-Approved Packaging. Packaging for fireworks complying with the regulations of the U.S. Department of Transportation (DOT), Title 49, Part 178.

3.3.26 Electric Match. An electric device that contains a small amount of pyrotechnic material that ignites when current flows through the device. [**1123**, 2006]

3.3.27* Explosive. Any chemical compound, mixture, or device, the primary or common purpose of which is to function by explosion. [**495**, 2006]

3.3.28 Explosive Composition. See 3.3.15.1.

3.3.29 Facility.

3.3.29.1 ***Consumer Fireworks Retail Sales Facility (CFRS Facility).*** A permanent or temporary building or structure, CFRS stand, tent, canopy, or membrane structure that is used primarily for the retail display and sale of consumer fireworks to the public.

3.3.29.2 ***Distribution Facility.*** A place where consumer fireworks are received, stored, picked, packaged and packed into shipping cartons, and shipped to other distribution facilities, manufacturing facilities, or CFRS facilities or stores.

3.3.29.3* ***Manufacturing Facility.*** A place where manufacturing of fireworks, novelties, pyrotechnic articles, or components for these devices is conducted.

3.3.30* Fireworks. Any composition or device for the purpose of producing a visible or an audible effect for entertainment purposes by combustion, deflagration, or detonation, that meets the definition of *Consumer Fireworks* or *Display Fireworks* as set forth in this code.

3.3.30.1* ***Consumer Fireworks.*** Small fireworks devices containing restricted amounts of pyrotechnic composition, designed primarily to produce visible or audible effects by combustion, that comply with the construction, chemical composition, and labeling regulations of the U.S. Consumer Product Safety Commission (CPSC), as set forth in CPSC 16 CFR 1500 and 1507, 49 CFR 172, and APA Standard 87-1, *Standard for the Construction and Approval for Transportation of Fireworks, Novelties, and Theatrical Pyrotechnics.*

3.3.30.2* ***Display Fireworks.*** Large fireworks devices that are explosive materials intended for use in fireworks displays and designed to produce visible or audible effects by combustion, deflagration, or detonation, as set forth in CPSC 16 CFR 1500 and 1507, 49 CFR 172, and APA Standard 87-1, *Standard for the Construction and Approval for Transportation of Fireworks, Novelties, and Theatrical Pyrotechnics.*

3.3.31 Flame Break. A solid material without holes or other openings, used to retard the spread of flame.

3.3.32 Flashpowder. See 3.3.54.3, *Salute Powder.*

3.3.33 Highway. Any public street, public alley, or public road.

3.3.34 Inhabited Building. See 3.3.9.3.

3.3.35 Limited-Combustible Material. See 3.3.39.3.

3.3.36 Magazine. A building or structure, other than an explosives manufacturing building, approved for the storage of explosive materials.

Copyright National Fire Protection Association
Provided by IHS under license with NFPA
No reproduction or networking permitted without license from IHS
Not for Resale

3.3.37* Manufacturing. The mixing, pressing, and loading of explosive or pyrotechnic compositions for the purpose of producing fireworks or pyrotechnic articles.

3.3.38 Manufacturing Facility. See 3.3.29.3.

3.3.39 Material.

3.3.39.1 ***Binary Material.*** See 3.3.7, *Binary System.* [**1126,** 2006]

3.3.39.2* ***Bullet-Sensitive Explosive Material.*** Explosive material that can be detonated by 150 gr (9.8 g) M2 ball ammunition having a nominal muzzle velocity of 2700 ft/sec (824 m/sec) where fired from a 0.30 caliber rifle at a distance of 100 ft (30 m), measured perpendicularly. [**495**, 2006]

3.3.39.3 ***Limited-Combustible Material.*** Refers to a building construction material not complying with the definition of *noncombustible material* that, in the form in which it is used, has a potential heat value not exceeding 3500 Btu/lb (8141 kJ/kg), where tested in accordance with NFPA 259, *Standard Test Method for Potential Heat of Building Materials*, and includes either of the following: (1) materials having a structural base of noncombustible material, with a surfacing not exceeding a thickness of ⅛ in. (3.2 mm) that has a flame spread index not greater than 50; (2) materials, in the form and thickness used, having neither a flame spread index greater than 25 nor evidence of continued progressive combustion, and of such composition that surfaces that would be exposed by cutting through the material on any plane would have neither a flame spread index greater than 25 nor evidence of continued progressive combustion, when tested in accordance with NFPA 255, *Standard Method of Test of Surface Burning Characteristics of Building Materials*, or ASTM E 84. *Standard Test Method of Surface Burning Characteristics of Building Materials.* [***5000***, 2006]

3.3.39.4 ***Noncombustible Material.*** A material that, in the form in which it is used and under the conditions anticipated, will not ignite, burn, support combustion, or release flammable vapors, when subjected to fire or heat. Materials that are reported as passing ASTM E 136, *Standard Test Method for Behavior of Materials in a Vertical Tube Furnace at 750°C*, shall be considered noncombustible materials. [***5000***, 2006]

3.3.39.5* ***Pyrotechnic Material (Pyrotechnic Special Effects Material).*** A chemical mixture used in the entertainment industry to produce visible or audible effects by combustion, deflagration, or detonation.

3.3.40 Mechanical Building. See 3.3.9.4.

3.3.41* Mercantile Occupancy. An occupancy used for the display and sale of merchandise. [***5000***, 2006]

3.3.42* Mine. A device containing multiple pyrotechnic effects that are simultaneously ignited and dispersed into the air from mortar or tube. [**1123**, 2006]

3.3.43 Mixing Building. See 3.3.9.5.

3.3.44 Motor Vehicle. Any self-propelled vehicle, truck, tractor, semitrailer, or truck-trailer combination used for the transportation of freight over public highways. [**495**, 2006]

3.3.45 Natural Barricade. See 3.3.5.2.

3.3.46 Noncombustible or Limited-Combustible Material. See 3.3.39.4.

3.3.47 Nonprocess Building. See 3.3.9.6.

3.3.48* Novelties. Small devices containing limited amounts of pyrotechnic or explosive composition that produce a visible or an audible effect and that are not classified as consumer fireworks.

3.3.49* Oxidizer. Usually an oxygen-rich, ionically bonded chemical that decomposes at moderate to high temperatures.

3.3.50* Packaged Fireworks Merchandise. A consumer fireworks device or group of consumer fireworks devices that has been packaged within an unperforated container or packaging material by the manufacturer, distributor, or seller for retail display and sale as a unit.

3.3.51 Permanent. As applied to buildings or structures: a building or structure affixed to a foundation on a site and having fixed utility connections, that is intended to remain on the site for more than 180 consecutive calendar days.

3.3.52 Person. An individual, a firm, a copartnership, a corporation, a company, an association, or a joint-stock association, including any trustee, receiver, assignee, or personal representative thereof.

3.3.53 Pest Control Device. An explosive device used to control animal pests.

3.3.54 Powder.

3.3.54.1 ***Black Powder.*** A low explosive consisting of an intimate mixture of potassium or sodium nitrate, charcoal, and sulfur. [**1126**, 2006]

3.3.54.2 ***Flashpowder.*** See 3.3.54.3, *Salute Powder.*

3.3.54.3 ***Salute Powder.*** An explosive composition that makes a loud report when ignited and constitutes the sole pyrotechnic mixture in a salute.

3.3.54.3.1 ***Bulk Salute Powder.*** A quantity of salute powder in an amount exceeding 1 lb (0.45 kg).

3.3.55 Process Area. See 3.3.3.2.

3.3.56 Process Building. See 3.3.9.7.

3.3.57 Public Conveyance. Any railroad car, streetcar, ferry, cab, bus, airplane, or other vehicle that carries passengers for hire. [**495**, 2006]

3.3.58 Pyrotechnic Article. A pyrotechnic device, other than a device classed as fireworks, for use in the entertainment industry.

3.3.59 Pyrotechnic Composition. See 3.3.15.2.

3.3.60* Pyrotechnic Laboratory. A building or room used for research, development, or testing of chemicals, fireworks, pyrotechnic articles, or components containing explosive or pyrotechnic compositions.

3.3.61 Pyrotechnic Material. See 3.3.39.5.

3.3.62 Pyrotechnic Special Effect. A special effect created through the use of pyrotechnic materials and devices. *(See also D.1.42, Special Effect.)* [**1126**, 2006]

3.3.63 Pyrotechnics. Controlled exothermic chemical reactions that are timed to create the effects of heat, gas, sound, dispersion of aerosols, emission of visible electromagnetic radiation, or a combination of these effects to provide the maximum effect from the least volume.

3.3.64 Railway. Any steam, electric, diesel-electric, or other railroad or railway that carries passengers for hire on the particular line or branch in the vicinity of a pyrotechnics manufacturing or storage facility.

Copyright National Fire Protection Association
Provided by IHS under license with NFPA
No reproduction or networking permitted without license from IHS
Not for Resale

3.3.65 Retail Sales. The retail display and sale of merchandise to the public within a mercantile occupancy.

3.3.66 Rocket. A pyrotechnic device that moves by the ejection of matter produced by the internal combustion of propellants.

3.3.67 Salute. A display firework that is designed to produce a loud report.

3.3.67.1 ***Aerial Salute.*** A salute that functions as an aerial shell.

3.3.67.2 ***Bulk Salute.*** A collection of salutes or salute components containing more than 2 lb (0.9 kg) of salute powder, unless the salutes are mixed with other types of aerial shells so that the total quantity of salutes to other types of shells is less than 50 percent in a single magazine.

3.3.67.3 ***Ground Salute.*** A salute that functions from a stationary or secured position.

3.3.68 Salute Powder. See 3.3.54.3.

3.3.69 Screen Barricade. See 3.3.5.3.

3.3.70 Shipping Building. See 3.3.9.8.

3.3.71 Special Fireworks. See 3.3.30.2, *Display Fireworks.*

3.3.72* Stars. Small masses of pyrotechnic compounds that are projected from aerial shells, mines, or roman candles.

3.3.73 Storage Building. See 3.3.9.9.

3.3.74* Store. A building classified as a mercantile occupancy that contains a variety of merchandise and that is not used primarily for the retail sales of consumer fireworks.

3.3.75 Temporary. As applied to buildings or structures: a building or structure not meeting the definition for permanent structure. As applied to electrical power and wiring: electrical service in use or in place for a period of 90 consecutive calendar days or less.

3.3.76 Unoccupied Building. See 3.3.9.10.

3.3.77 Whistle Composition. See 3.3.15.3.

Chapter 4 Manufacturing Operations

4.1 Applicability.

4.1.1 All manufacturing facilities shall comply with the requirements of this chapter.

4.1.2 Manufacturing facilities shall not be required to comply with Sections 4.4, 4.6, 4.7, and 5.3, provided that they meet all of the following conditions:

(1) Manufacturing is restricted to production of custom fireworks, pyrotechnic articles, and any component(s) containing pyrotechnic or explosive materials that are not for general sale.
(2) The facility contains not more than 5 lb (2.3 kg) of pyrotechnic composition, of which not more than 0.5 lb (0.23 kg) is of explosive composition.
(3) All explosive and pyrotechnic compositions are removed to a storage magazine at the end of each workday.

4.1.3 This chapter shall not apply to the following operations performed in a separate building or area, which are not considered fireworks manufacturing:

(1) Assembly of display pieces from finished fireworks, pyrotechnic articles, and fuse classified as UN0336, UN0337, UN0431, and UN0432
(2) Minor repairs or modification of finished fireworks not involving exposed pyrotechnic material
(3) Picking and packaging finished fireworks into packages including assortments
(4) Packing packages and assortments into DOT-approved packaging
(5) The attachment of a match or fuse and minor repairs to display fireworks and pyrotechnic articles

4.2 Permit Requirements. The manufacture of any fireworks shall be prohibited unless authorized by federal license, where required, and conducted in accordance with this code.

4.2.1 Persons engaged in the business of importing, manufacturing, or dealing in fireworks shall meet both of the following requirements:

(1) They shall possess a valid federal license or permit, where required by Title XI, "Regulation of Explosives, of the Crime Control Act of 1970" (18 USC Chapter 40, "Importation, Manufacture, Distribution, and Storage of Explosive Materials").
(2) They shall comply with all applicable state and local laws and regulations.

4.2.1.1 Copies of all required licenses and permits shall be posted at each manufacturing facility.

4.2.1.1.1 License and permit holders shall protect licenses and permits from loss, theft, defacement, destruction, or unauthorized duplication.

4.2.1.1.2 Any loss, theft, defacement, destruction, or unauthorized duplication of a license or permit shall be reported immediately to the issuing authority.

4.2.1.2 Licenses or permits shall not be assigned or transferred.

4.2.2 The issuing authority shall be notified immediately of any change of business name, controlling ownership, or address.

4.3 Recordkeeping and Reporting.

4.3.1 Record Maintenance.

4.3.1.1 Manufacturers shall maintain records in compliance with federal regulations.

4.3.1.2 Manufacturers shall maintain records for all chemicals and chemical mixtures in compliance with the requirements of 29 CFR 1910.1200, "Hazard Communication."

4.3.2 Record Availability. Records shall be made available to the authority having jurisdiction (AHJ).

4.3.2.1 Where consumer fireworks are handled exclusively, records shall be maintained for 3 years.

4.3.2.2 Records other than consumer fireworks shall be maintained for 5 years.

4.3.3 Loss, Theft, or Unlawful Removal of Explosive Materials.

4.3.3.1 The loss, theft, or unlawful removal of explosive materials shall be reported immediately to the nearest office of the Bureau of Alcohol, Tobacco and Firearms, U.S. Department of the Treasury, and to local law enforcement authorities.

4.3.3.2 The loss, theft or removal of consumer fireworks shall not be required to be reported.

Copyright National Fire Protection Association
Provided by IHS under license with NFPA
No reproduction or networking permitted without license from IHS
Not for Resale

4.4 Site Security.

4.4.1 General. All plant buildings containing pyrotechnic composition, explosive composition, or fireworks shall be locked at the end of the workday and whenever plant personnel are not present, to provide security.

4.4.2 Plant Access.

4.4.2.1 All roads leading into the plant shall be provided with gates that shall be kept closed and locked at all times when not used for entry or exit.

4.4.2.2 Vehicle access to the plant shall be restricted to roadways by means of a fence, natural barriers such as trees, and culverts, or by other means.

4.4.2.3 If the main plant entrance is in full view of and under the observation of an authorized responsible employee or guard, the main plant entrance shall be permitted to be left open during regular plant operating hours.

4.4.2.4 Only authorized employees or representatives of federal, state, or local agencies having jurisdiction over the plant shall be permitted inside the plant without special permission of the person in charge.

4.4.3 Signage. Conspicuous signs that read as follows shall be posted at the entrance and along the fence or barrier:

WARNING: NO SMOKING — NO TRESPASSING

4.5 Construction.

4.5.1 Process Building.

4.5.1.1 Process buildings shall be single-story buildings and shall not have basements.

4.5.1.2 Wall joints and openings for wiring, plumbing, and other utilities shall be sealed to prevent the entry of dusts.

4.5.1.3 Horizontal ledges and surfaces upon which dust can settle and accumulate shall be minimized.

4.5.2* Floors and Work Surfaces.

4.5.2.1 Floors and work surfaces shall not have cracks or crevices in which explosives or pyrotechnic compositions can lodge.

4.5.2.2 Floors and work surfaces in mixing and loading buildings for salute powder shall be of conductive materials.

4.5.2.3 Conductive footwear or other grounding techniques for personnel shall be used wherever exposed salute powder is present.

4.5.3 Heating, Lighting, and Electrical Equipment.

4.5.3.1 Stoves, exposed flames, and portable electric heaters shall be prohibited in any building where fireworks, fireworks components, or flammable liquids are or can be present.

4.5.3.2 Heating shall be provided by steam, hot water, indirect hot air radiators, or any other means acceptable to the AHJ.

4.5.3.3 Unit heaters located in buildings that contain exposed explosive or pyrotechnic composition shall be equipped with motors and electrical devices for use in hazardous locations in accordance with Article 502 of NFPA 70, *National Electrical Code*.

4.5.3.4 All wiring, switches, and electrical fixtures in process buildings shall meet the requirements for hazardous locations in accordance with Article 502 of NFPA 70, *National Electrical Code*.

4.5.3.4.1 Portable lighting equipment shall not be used, unless under both of the following conditions:

(1) Listed portable lighting equipment shall be permitted to be used during repair operations.
(2) The repair operations area shall be cleared of all pyrotechnic or explosive material, and all dust or residue shall be removed before portable lighting equipment is used.

4.5.3.4.2 All presses and other such mechanical devices used in the vicinity of exposed explosive or pyrotechnic composition shall be electrically bonded and grounded.

4.5.3.5 All artificial lighting shall be electrically powered.

4.5.4 Static Discharge.

4.5.4.1 A means for discharging static shall be provided at the entrance to all mixing, pressing, and loading buildings where exposed salute powder is present.

4.5.4.2 All personnel entering the buildings described in 4.5.4.1 shall utilize the means required by 4.5.4.1.

4.5.5 Explosion Relief.

4.5.5.1* Provision of explosion relief, by means of pressure-relieving construction or explosion vents, shall be considered for each process building in which an explosion hazard exists.

4.5.5.2 Where climatic conditions (or local building code requirements) prevent the use of pressure-relieving construction or explosion vents, alternate methods of protecting nearby buildings such as, but not limited to, screen-type barricades and differences in elevation of trees shall be provided for buildings in which an explosion hazard exists.

4.5.6 Means of Egress.

4.5.6.1 Means of egress in all buildings shall comply with applicable requirements of NFPA *101, Life Safety Code*.

4.5.6.2 Means of egress in process buildings also shall comply with the following requirements:

(1) At least two remotely located means of egress shall be provided from every point in every undivided floor area of more than 100 ft^2 (9 m^2).
(2) Where process buildings are divided into rooms, means of egress shall be as follows:
   (a) At least two means of escape shall be provided from each room of more than 100 ft^2 (9 m^2).
   (b) Toilet rooms shall be permitted to have only one means of egress, provided that they are located away from or shielded from process areas.
(3) An unobstructed means of egress shall be located so that every point within the room or undivided floor area is within 25 ft (7.6 m) of a means of egress.
(4) Exit doors shall open outward and shall be capable of being pressure actuated from the inside.

4.6 Separation Distances and Quantity Tables.

4.6.1 General.

4.6.1.1 Barricades. To be effective, a barricade shall be of such height that one of the following passes through the barricade:

(1) A straight line measured from the top of any sidewall of a magazine or building containing explosives to the eave line of any magazine or building

Copyright National Fire Protection Association
Provided by IHS under license with NFPA
No reproduction or networking permitted without license from IHS
Not for Resale

(2) A straight line measured from the top of any sidewall of a magazine or building containing explosives to a point 12 ft (3.7 m) above the center of a railway or highway

4.6.1.2 Screen Barricades.

4.6.1.2.1 Screen barricades shall be permitted to be constructed of one of the following:

(1) Metal roofing
(2) 0.25 in. to 0.5 in. (6 mm to 13 mm) mesh screen
(3) Other equivalent material

4.6.1.2.2 The screen barrier shall extend from floor level to a height such that a straight line measured from the top of any sidewall of the donor building to the eave line of any exposed building intercepts the screen at a point not less than 5 ft (1.5 m) from the top of the screen.

4.6.1.2.3 The top 5 ft (1.5 m) of the screen barrier shall incline toward the donor building at an angle of 30 degrees to 45 degrees.

4.6.2 Separation Distances and Quantity Tables for Process Buildings and Areas.

4.6.2.1 Process buildings and areas shall be separated from other process buildings and areas and from nonprocess buildings in accordance with the distances specified in Table 4.6.2.1.

4.6.2.2 A maximum of 500 lb (227 kg) of in-process composition, in loose form or in partially assembled display fireworks, shall be permitted in any process building or area.

4.6.2.3 Finished display fireworks shall not be stored in a process building. *(See Section 4.7.)*

4.6.2.4 A maximum of 10 lb (4.5 kg) of salute powder, in loose form or in assembled units, shall be permitted in any process building or area.

4.6.2.5 Quantities of loose salute powder in excess of 10 lb (4.5 kg) shall be kept in an approved magazine.

4.6.2.6 The minimum separation distance for in-process consumer fireworks or pyrotechnic articles shall be as follows:

(1) The minimum separation distance of 37 ft (11 m) for in-process consumer fireworks or pyrotechnic articles shall apply only to 100 lb (45 kg) of loose powder or stars.
(2) If a quantity of loose powder or stars greater than 100 lb (45 kg) is present, the minimum separation distances in Table 4.6.2.1 for in-process display fireworks shall be used.

4.6.3 Separation Distances for Process Buildings and Areas from Inhabited Buildings, Passenger Railways, Public Highways, Magazines, and Shipping and Storage Buildings. Process buildings and areas shall be separated from the following in accordance with the distances specified in Table 4.6.3:

(1) Inhabited buildings
(2) Passenger railways
(3) Public highways
(4) Magazines
(5) Display fireworks shipping buildings
(6) Consumer fireworks storage buildings

4.6.3.1* The distances in Table 4.6.3 shall apply to process buildings and areas with or without barricades or screen-type barricades.

Table 4.6.3 Minimum Separation Distances of Process Buildings and Areas at Manufacturing Facilities from Inhabited Buildings, Passenger Railways, Public Highways, Magazines, Shipping Buildings, and Storage Buildings

Net Weight of Fireworks*		In-Process Display Fireworks†		In-Process Consumer Fireworks or Pyrotechnic Articles	
lb	kg	ft	m	ft	m
> 0 to ≤ 100	> 0 to ≤ 45	200	61	25	7.6
> 100 to ≤ 500	> 45 to ≤ 227	200	61	50	15
> 500	> 227	NP	NP	NP	NP

NP: Not permitted.
*Net weight equals the weight of all pyrotechnic and explosive composition and fuse only.
†For information on the separation distances between process buildings see Table 4.6.2.1, between magazines see Table 4.6.4.1 and Table 4.6.4.4, and between storage buildings see Table 4.6.6.

Table 4.6.2.1 Minimum Separation Distances of Process Buildings and Areas from Process and Nonprocess Buildings and Areas

Net Weight of Fireworks[a]		In-Process Display Fireworks without Barricades		In-Process Display Fireworks with Barricades		In-Process Consumer Fireworks or Pyrotechnic Articles[b,c]	
lb	kg	ft	m	ft	m	ft	m
> 0 to ≤ 100	> 0 to ≤ 45	114	35	57	17	37	11
> 100 to ≤ 200	> 45 to ≤ 91	138	42	69	21	37	11
> 200 to ≤ 300	> 91 to ≤ 136	154	47	77	23	37	11
> 300 to ≤ 400	> 136 to ≤ 181	170	52	85	26	37	11
> 400 to ≤ 500	> 181 to ≤ 227	182	55	91	28	37	11
> 500	> 227	NP	NP	NP	NP	NP	NP

NP: Not permitted.
[a]Net weight equals the weight of all pyrotechnic and explosive composition and fuse only.
[b]For maximum quantity of pyrotechnic composition permitted in a pyrotechnics laboratory, see 4.6.9.3.
[c]See 4.6.2.6(1).

Copyright National Fire Protection Association
Provided by IHS under license with NFPA
No reproduction or networking permitted without license from IHS
Not for Resale

4.6.3.2 Table 4.6.3 shall not apply to the separation distances between process buildings or areas *(see Table 4.6.2.1)*, between magazines *(see Table 4.6.4.1 and Table 4.6.4.4)*, and between storage buildings *(see Table 4.6.6 and Table 6.7.1)*.

4.6.3.3 A maximum of 500 lb (227 kg) of in-process composition, in loose form or in partially assembled display fireworks, shall be permitted in any process building or area.

4.6.3.4 Finished display fireworks shall not be stored in a process building. *(See Section 4.7.)*

4.6.3.5 A maximum of 10 lb (4.5 kg) of salute powder, either in loose form or in assembled units, shall be permitted in any process building or area at one time.

4.6.3.6 Quantities of salute powder in excess of 10 lb (4.5 kg) shall be kept in an approved magazine.

4.6.4 Separation Distances and Quantity Tables for Magazines for the Storage of Display Fireworks and Components for Display Fireworks, Loose Pyrotechnic Composition, and Stars.

4.6.4.1 Magazines for the storage of display fireworks and components for display fireworks, loose pyrotechnic composition, and stars shall be separated from inhabited buildings, passenger railways, public highways, and other magazines in accordance with the distances specified in Table 4.6.4.1.

4.6.4.2 For the purposes of applying Table 4.6.4.1, the following criteria shall be met:

(1) Display fireworks shipping buildings shall meet the same distance requirements as magazines.
(2) All compositions not in current use shall be kept in covered, nonferrous containers, unless such composition has been loaded or pressed into tubes or other containers as consumer fireworks.

4.6.4.3 At a fireworks plant, up to 50 lb (22.7 kg) of pyrotechnic composition or display fireworks shall be permitted to be stored in a Type 2 or a Type 4 indoor magazine in any process building.

4.6.4.4 Magazines for the storage of bulk salute powder and bulk salutes shall comply with Table 4.6.4.4.

4.6.4.5 For fireworks storage magazines in active use prior to March 7, 1990, the distances in Table 4.6.4.1 shall be permitted to be halved, provided that earthen barricades are used between the magazine and potential receptor sites.

4.6.4.6 Table 4.6.4.1 shall not apply to the storage of bulk salute powder or to the storage of shipping cartons or storage containers that primarily contain salutes or salute components. *(See Table 4.6.4.4 for bulk salute powder and bulk salute storage requirements.)*

4.6.4.7 Magazines for the storage of Black Powder shall comply with Table 4.6.4.7.

4.6.5 Magazines Containing Salute Powder and Salutes. Magazines containing salute powder and salutes shall be separated from each other and from inhabited buildings, public highways, and passenger railways in accordance with the distances specified in Table 4.6.4.4.

Table 4.6.4.7 Minimum Separation Distances for the Storage of Black Powder

Pounds		From Inhabited Building Distance (ft)	From Public Railroad and Highway Distance (ft)	From Aboveground Magazine (ft)
Over	Not Over			
0	1,000	75	75	50
1,000	5,000	115	115	75
5,000	10,000	150	150	100
10,000	20,000	190	190	125
20,000	30,000	215	215	145
30,000	40,000	235	235	155
40,000	50,000	250	250	165
50,000	60,000	260	260	175
60,000	70,000	270	270	185
70,000	80,000	280	280	190
80,000	90,000	295	295	195
90,000	100,000	300	300	200
100,000	200,000	375	375	250
200,000	300,000	450	450	300

Source: ATF Table 55.219, Table of Distances for Storage of Low Explosives.

Table 4.6.4.1 Minimum Separation Distances for the Storage of Display Fireworks (Except Bulk Salutes) from Inhabited Buildings, Passenger Railways, Public Highways, Magazines, Shipping Buildings, and Storage Buildings

Net Weight of Fireworks*		Distance Between Magazine or Shipping Building and Inhabited Building, Passenger Railway, or Public Highway		Distance between Magazines, Shipping Buildings, and Storage Buildings†	
lb	kg	ft	m	ft	m
> 0 to ≤ 1000	> 0 to ≤ 454	150	46	100	30
> 1,000 to ≤ 5,000	> 454 to ≤ 2,268	230	70	150	46
> 5,000 to ≤ 10,000	> 2,268 to ≤ 4,536	300	91	200	61
> 10,000	> 4,536	See Table 4.6.4.4		See Table 4.6.4.4	

*Net weight equals the weight of all pyrotechnic and explosive compositions and fuse only.
† For distances between storage buildings to storage buildings, see Table 4.6.4.4.

Copyright National Fire Protection Association
Provided by IHS under license with NFPA
No reproduction or networking permitted without license from IHS
Not for Resale

Table 4.6.4.4 The American Table of Distances for Storage of Explosives

Quantity of Explosive Materials[1,2,3,4]		Distances (ft)							
		Inhabited Buildings[9]		Public Highways Class A to D[11]		Passenger Railways — Public Highways with Traffic Volume of More than 3,000 Vehicles/Day[10,11]		Separation of Magazines[5,12]	
Pounds Over	Pounds Not Over	Barricaded[6,7,8]	Unbarricaded	Barricaded[6,7,8]	Unbarricaded	Barricaded[6,7,8]	Unbarricaded	Barricaded[6,7,8]	Unbarricaded
0	5	70	140	30	60	51	102	6	12
5	10	90	180	35	70	64	128	8	16
10	20	110	220	45	90	81	162	10	20
20	30	125	250	50	100	93	186	11	22
30	40	140	280	55	110	103	206	12	24
40	50	150	300	60	120	110	220	14	28
50	75	170	340	70	140	127	254	15	30
75	100	190	380	75	150	139	278	16	32
100	125	200	400	80	160	150	300	18	36
125	150	215	430	85	170	159	318	19	38
150	200	235	470	95	190	175	350	21	42
200	250	255	510	105	210	189	378	23	46
250	300	270	540	110	220	201	402	24	48
300	400	295	590	120	240	221	442	27	54
400	500	320	640	130	260	238	476	29	58
500	600	340	680	135	270	253	506	31	62
600	700	355	710	145	290	266	532	32	64
700	800	375	750	150	300	278	556	33	66
800	900	390	780	155	310	289	578	35	70
900	1,000	400	800	160	320	300	600	36	72
1,000	1,200	425	850	165	330	318	636	39	78
1,200	1,400	450	900	170	340	336	672	41	82
1,400	1,600	470	940	175	350	351	702	43	86
1,600	1,800	490	980	180	360	366	732	44	88
1,800	2,000	505	1,010	185	370	378	756	45	90
2,000	2,500	545	1,090	190	380	408	816	49	98
2,500	3,000	580	1,160	195	390	432	864	52	104
3,000	4,000	635	1,270	210	420	474	948	58	116
4,000	5,000	685	1,370	225	450	513	1,026	61	122
5,000	6,000	730	1,460	235	470	546	1,092	65	130
6,000	7,000	770	1,540	245	490	573	1,146	68	136
7,000	8,000	800	1,600	250	500	600	1,200	72	144
8,000	9,000	835	1,670	255	510	624	1,248	75	150
9,000	10,000	865	1,730	260	520	645	1,290	78	156
10,000	12,000	875	1,750	270	540	687	1,374	82	164
12,000	14,000	885	1,770	275	550	723	1,446	87	174
14,000	16,000	900	1,800	280	560	756	1,512	90	180
16,000	18,000	940	1,880	285	570	786	1,572	94	188
18,000	20,000	975	1,950	290	580	813	1,626	98	196
20,000	25,000	1,055	2,000	315	630	876	1,752	105	210
25,000	30,000	1,130	2,000	340	680	933	1,866	112	224
30,000	35,000	1,205	2,000	360	720	981	1,962	119	238
35,000	40,000	1,275	2,000	380	760	1,026	2,000	124	248
40,000	45,000	1,340	2,000	400	800	1,068	2,000	129	258
45,000	50,000	1,400	2,000	420	840	1,104	2,000	135	270
50,000	55,000	1,460	2,000	440	880	1,140	2,000	140	280
55,000	60,000	1,515	2,000	455	910	1,173	2,000	145	290
60,000	65,000	1,565	2,000	470	940	1,206	2,000	150	300
65,000	70,000	1,610	2,000	485	970	1,236	2,000	155	310
70,000	75,000	1,655	2,000	500	1,000	1,263	2,000	160	320
75,000	80,000	1,695	2,000	510	1,020	1,293	2,000	165	330
80,000	85,000	1,730	2,000	520	1,040	1,317	2,000	170	340
85,000	90,000	1,760	2,000	530	1,060	1,344	2,000	175	350
90,000	95,000	1,790	2,000	540	1,080	1,368	2,000	180	360
95,000	100,000	1,815	2,000	545	1,090	1,392	2,000	185	370

(continues)

Copyright National Fire Protection Association
Provided by IHS under license with NFPA
No reproduction or networking permitted without license from IHS
Not for Resale

Table 4.6.4.4 *Continued*

Quantity of Explosive Materials[1,2,3,4]		Distances (ft)							
		Inhabited Buildings[9]		Public Highways Class A to D[11]		Passenger Railways — Public Highways with Traffic Volume of More than 3,000 Vehicles/Day[10,11]		Separation of Magazines[5,12]	
Pounds Over	Pounds Not Over	Barricaded[6,7,8]	Unbarricaded	Barricaded[6,7,8]	Unbarricaded	Barricaded[6,7,8]	Unbarricaded	Barricaded[6,7,8]	Unbarricaded
100,000	110,000	1,835	2,000	550	1,100	1,437	2,000	195	390
110,000	120,000	1,855	2,000	555	1,110	1,479	2,000	205	410
120,000	130,000	1,875	2,000	560	1,120	1,521	2,000	215	430
130,000	140,000	1,890	2,000	565	1,130	1,557	2,000	225	450
140,000	150,000	1,900	2,000	570	1,140	1,593	2,000	235	470
150,000	160,000	1,935	2,000	580	1,160	1,629	2,000	245	490
160,000	170,000	1,965	2,000	590	1,180	1,662	2,000	255	510
170,000	180,000	1,990	2,000	600	1,200	1,695	2,000	265	530
180,000	190,000	2,010	2,010	605	1,210	1,725	2,000	275	550
190,000	200,000	2,030	2,030	610	1,220	1,755	2,000	285	570
200,000	210,000	2,055	2,055	620	1,240	1,782	2,000	295	590
210,000	230,000	2,100	2,100	635	1,270	1,836	2,000	315	630
230,000	250,000	2,155	2,155	650	1,300	1,890	2,000	335	670
250,000	275,000	2,215	2,215	670	1,340	1,950	2,000	360	720
275,000	300,000	2,275	2,275	690	1,380	2,000	2,000	385	770

Explanatory Notes Essential to the Application of the American Table of Distances for Storage of Explosives

[1] "Explosive materials" means explosives, blasting agents, and detonators.

[2] "Explosives" means any chemical compound, mixture, or device, the primary or common purpose of which is to function by explosion. A list of explosives determined to be within the coverage of 18 USC Chapter 40, "Importation, Manufacture, Distribution, and Storage of Explosive Materials," is issued at least annually by the Director of the Bureau of Alcohol, Tobacco, and Firearms of the Department of the Treasury. For quantity and distance purposes, detonating cord of 50 grains per foot should be calculated as equivalent to 8 lb (3.7 kg) of high explosives per 1,000 ft (305 m). Heavier or lighter core loads should be rated proportionately.

[3] "Blasting agents" means any material or mixture consisting of fuel and oxidizer, intended for blasting, not otherwise defined as an explosive, provided that the finished product, as mixed for use or shipment, cannot be detonated by means of a No. 8 test blasting cap where unconfined.

[4] "Detonator" means any device containing any initiating or primary explosive that is used for initiating detonation. A detonator shall not be permitted to contain more than 10 g of total explosives by weight, excluding ignition or delay charges. The term includes, but is not limited to, electric blasting caps of instantaneous and delay types, blasting caps for use with safety fuses, detonating cord delay connectors, and nonelectric instantaneous and delay blasting caps that use detonating cord, shock tube, or any other replacement for electric leg wires. All types of detonators in strengths through No. 8 cap should be rated at 1 lb (0.7 kg) of explosives per 1,000 caps.

[5] For strengths higher than No. 8 cap, consult the manufacturer.

[6] "Magazine" means any building, structure, or container, other than an explosives manufacturing building, approved for the storage of explosive materials.

[7] "Natural barricade" means natural features of the ground, such as hills, or timber of sufficient density that the surrounding exposures that require protection cannot be seen from the magazine when the trees are bare of leaves.

[8] "Artificial barricade" means an artificial mound or revetted wall of earth of a minimum thickness of 3 ft (0.9 m).

[9] "Barricaded" means the effective screening of a building containing explosive materials from the magazine or other building, railway, or highway by a natural or an artificial barrier. A straight line from the top of any sidewall of the building containing explosive materials to the eave line of any magazine or other building or to a point 12 ft (3.7 m) above the center of a railway or highway shall pass through such barrier.

[10] "Inhabited building" means a building regularly occupied in whole or part as a habitation for human beings, or any church, schoolhouse, railroad station, store, or other structure where people are accustomed to assemble, except any building or structure occupied in connection with the manufacture, transportation, storage, or use of explosive materials.

[11] "Railway" means any steam, electric, or other railroad or railway that carries passengers for hire.

[12] "Highway" means any public street, public alley, or public road.

[13] Where two or more storage magazines are located on the same property, each magazine must comply with the minimum distances specified from inhabited buildings, railways, and highways, and, in addition, the magazine should be separated from each other by not less than the distances shown for "separation of magazines," except that the quantity of explosive materials contained in detonator magazines shall govern with regard to the spacing of the detonator magazines from magazines containing other explosive materials. If any two or more magazines are separated from each other by less than the specified "separation of magazines" distances, then those two or more magazines, as a group, must be considered as one magazine, and the total quantity of explosive materials stored in such group must be treated as if stored in a single magazine located on the site of any magazine of the group, and must comply with the minimum distances specified from other magazines, inhabited buildings, railways, and highways.

[14] Storage in excess of 300,000 lb (136,200 kg) of explosive materials in one magazine is generally not required for commercial enterprises.

[15] This table applies only to the manufacture and permanent storage of commercial explosive materials. It is not applicable to transportation of explosives or any handling or temporary storage necessary or incident thereto. It is not intended to apply to bombs, projectiles, or other heavily encased explosives.

[16] Where a manufacturing building on an explosive materials plant site is designed to contain explosive materials, such building shall be located from inhabited buildings, public highways, and passenger railways in accordance with the American Table of Distances based on the maximum quantity of explosive materials permitted to be in the building at one time.

Source: Reprinted from IME Library Publication No. 2, with permission of the Institute of Makers of Explosives, revised in June 1991.

Copyright National Fire Protection Association
Provided by IHS under license with NFPA
No reproduction or networking permitted without license from IHS
Not for Resale

4.6.6 Separation Distances and Quantity Tables for Storage Buildings for Consumer Fireworks. Storage buildings for consumer fireworks located at fireworks manufacturing facilities shall be separated from inhabited buildings, passenger railways, public highways, and other storage buildings in accordance with the distances specified in Table 4.6.6.

4.6.7 Groups of Buildings.

4.6.7.1 If any process building is separated from any other process or nonprocess building by less than the distance specified in Table 4.6.2.1, two or more such buildings, as a group, shall be considered to be one building.

4.6.7.2 The total quantity of explosive and pyrotechnic composition in the group of buildings specified in 4.6.7.1 shall not exceed 500 lb (227 kg) or shall not exceed 10 lb (4.5 kg) of salute powder.

4.6.7.3 Each building in the group shall otherwise comply with the separation distances specified in Table 4.6.2.1 and Table 4.6.3.

4.6.7.4 Unoccupied buildings at manufacturing facilities shall not be subject to the separation distance requirements of Section 4.6.

4.6.8 Magazine Groups.

4.6.8.1 If any two or more magazines or storage buildings are separated by less than the distances specified in Table 4.6.4.1, Table 4.6.4.4, or Table 4.6.6, two or more such structures shall be considered to be one magazine or storage building.

4.6.8.2 The total quantity of explosive and pyrotechnic composition stored in the group of buildings shall be used to determine the minimum separation distances of each building in the group from inhabited buildings, passenger railways, public highways, and other magazines and storage buildings.

4.6.8.3 No minimum separation distance shall be required for process buildings, magazines, or storage buildings within a group.

4.6.9 Pyrotechnics Laboratories.

4.6.9.1 Pyrotechnics laboratories shall be considered process buildings for consumer fireworks for the purpose of separation distances.

4.6.9.2 Pyrotechnics laboratories shall be considered to be nonprocess buildings with respect to the other requirements of this code.

4.6.9.3 Pyrotechnics laboratories shall not contain more than 10 lb (4.5 kg) of pyrotechnic composition and not more than 0.5 lb (0.23 kg) of salute powder, provided that all fireworks and pyrotechnic composition are stored properly when not in use.

4.7* Maximum Number of Occupants and Maximum Quantity Limitations. Not more than 500 lb (227 kg) of pyrotechnic or explosive composition shall be permitted at one time in any process building or area.

4.8 Operations.

4.8.1 The requirements of 27 CFR 55, Bureau of Alcohol, Tobacco and Firearms, for transfer of the following from process buildings to magazines at the conclusion of daily operation shall be met:

(1) Dry explosive powders and mixtures
(2) Partially assembled display fireworks
(3) Finished display fireworks

4.8.2* Unless a variance from the requirement of 4.8.1 has been issued in writing to a manufacturer by the Bureau of Alcohol, Tobacco and Firearms, all dry explosive powders and mixtures, partially assembled display fireworks, and finished display fireworks shall be transferred from process buildings to magazines at the conclusion of daily operation.

4.9 Fire and Explosion Prevention.

4.9.1 Rubbish, Spills, and Waste Disposal.

4.9.1.1 All buildings shall be kept clean and orderly, and dust or rubbish shall be kept to a minimum.

4.9.1.2 Spills of explosive or pyrotechnic composition shall be cleaned up, and materials used for cleanup shall be removed immediately from the building.

4.9.1.3 The spilled material shall be destroyed by immersion in water or by burning in a manner acceptable to the AHJ.

4.9.1.4 Rags, combustible scrap, and paper shall be kept separate from waste explosive or pyrotechnic materials.

Table 4.6.6 Minimum Separation Distances of Consumer Fireworks Storage Buildings at Manufacturing Facilities from Passenger Railways, Public Highways, Other Storage Buildings, and Inhabited Buildings

Gross Weight of Consumer Fireworks		Distance from Passenger Railways, Public Highways, and Other Storage Buildings		Distance from Inhabited Buildings	
lb	kg	ft	m	ft	m
0–1,000	0–454	35	11	70	21
1,000–5,000	454–2,268	55	17	110	34
5,000–10,000	2,268–4,536	60	18	120	37
10,000–20,000	4,536–9,072	65	20	135	41
20,000–50,000	9,072–22,680	80	24	160	49
50,000–100,000	22,680–45,360	90	27	180	55
≥100,000	≥45,360	100	30	200	61

Copyright National Fire Protection Association
Provided by IHS under license with NFPA
No reproduction or networking permitted without license from IHS
Not for Resale

4.9.1.5 Rags, combustible scrap, and paper shall be kept in approved, marked containers until removed from the building.

4.9.1.6 Disposal containers shall be removed from buildings on a daily basis and removed from the plant at regular intervals.

4.9.1.7 Waste explosive or pyrotechnic materials shall be destroyed as described in 4.9.1.3.

4.9.2 Smoking Materials.

4.9.2.1 Smoking materials shall not be carried into or in the vicinity of process buildings.

4.9.2.2 Personnel shall deposit all smoking materials at a designated location in a nonprocess building before entering a processing plant.

4.9.2.3* Smoking shall be permitted only in office buildings or in buildings used exclusively as lunchrooms or rest rooms and in which the presence of explosive or pyrotechnic materials is prohibited.

4.9.2.4 Authorized smoking locations shall comply with the following:

(1) They shall be marked as smoking areas.
(2) They shall contain designated receptacles for disposal of smoking materials.
(3) They shall be provided with at least one approved portable fire extinguisher for use on Class A fires.

4.9.2.5 Personnel whose clothing is contaminated with explosive or pyrotechnic composition to a degree that endangers personnel safety shall not be permitted in smoking areas.

4.9.3 Substance Abuse. No employee or other person shall be permitted to enter the plant while in possession of or under the influence of alcohol, drugs, or narcotics.

4.9.4 Clothing.

4.9.4.1 Personnel working at or supervising mixing, pressing, and loading operations shall be provided with and shall wear cotton or other similarly protective clothing.

4.9.4.2 Other protective clothing, eye protection, and respiratory protection shall be worn as needed.

4.9.4.3 Washing and changing facilities shall be provided for personnel.

4.9.4.4 Work clothing shall be washed frequently to prevent the accumulation of explosive or pyrotechnic composition and shall not be worn outside the plant.

4.9.5* Oxidizers.

4.9.5.1 Oxidizers shall be stored to avoid contact with incompatible materials such as ordinary combustibles, flammable or combustible liquids, greases, and materials that could react with the oxidizer or promote or initiate its decomposition.

4.9.5.2 Incompatible materials shall not include approved packaging materials, pallets, or other dunnage.

4.9.5.3 Oxidizer storage shall comply with NFPA 430, *Code for the Storage of Liquid and Solid Oxidizers.*

4.9.6* Machinery and Tooling. Machinery and tooling shall be permitted to be made of ferrous metal. *(See also 4.5.3.4.2.)*

4.10 Fire Protection and Emergency Plans.

4.10.1 Fire Extinguishers.

4.10.1.1 Portable fire extinguishers shall be provided in all buildings in accordance with the requirements of NFPA 10, *Standard for Portable Fire Extinguishers.*

4.10.1.2 Fire extinguishers shall not be located in buildings in which explosive or pyrotechnic mixtures are exposed.

4.10.2 Emergency Plan.

4.10.2.1 Each plant shall have a formal emergency plan.

4.10.2.2 An emergency warning signal shall be established.

4.10.2.3 The emergency plan shall include employee instruction and training and shall be applicable to all anticipated emergencies.

4.10.2.4 The emergency plan shall include instruction in the use of portable fire extinguishers and the identification of fires on which they can be used.

4.10.2.5 Employees shall be instructed to abandon firefighting efforts if the fire involves or appears likely to spread to explosive or pyrotechnic composition or devices, in which case employees shall evacuate the building immediately and alert other plant personnel.

4.10.3 Master Electrical Disconnect.

4.10.3.1 A master electrical disconnect shall be provided at the point where the electrical service enters the plant.

4.10.3.2 The master disconnect shall be arranged to disconnect all electrical power to the plant.

4.10.3.3 Emergency circuits, such as the electrical supply to fire pumps or emergency lighting, shall have their own master disconnects.

4.11* Testing of Fireworks and Pyrotechnic Articles.

4.11.1 Testing of fireworks, pyrotechnic materials, and pyrotechnic and explosive compositions shall be performed only in a building or area specifically designated for the purpose.

4.11.2 Testing shall be conducted at a safe distance from other plant buildings or structures and process areas.

4.11.3 Testing of fireworks, pyrotechnic articles, and any component(s) containing pyrotechnic or explosive materials shall be performed only in an area specifically designated by the manufacturer and approved by the AHJ.

4.12 Occupancies.

4.12.1* The number of occupants in each process building and in each magazine shall not exceed the number necessary to conduct production operations.

4.12.2 The maximum number of occupants and maximum weight of pyrotechnic and explosive composition permitted in each process building and in each magazine shall be posted in a conspicuous location in each process building or magazine.

4.13 Training.

4.13.1 Each plant shall designate an employee as safety officer who shall be responsible for general safety, fire prevention and protection, and employee safety training.

Copyright National Fire Protection Association
Provided by IHS under license with NFPA
No reproduction or networking permitted without license from IHS
Not for Resale

4.13.2 The safety officer shall provide formal instruction to all employees upon their commencing employment and at least annually thereafter, regarding safety methods, procedures, and requirements and procedures for handling explosive and pyrotechnic compositions and devices.

4.14 Item Construction.

4.14.1 Aerial Shells. Aerial shells shall be constructed so that they fit easily into the correctly sized mortar, and so that the correct lift charge and internal delay fuse are used to propel the shell to a safe altitude before it functions.

4.14.2 Safety Caps. Safety caps shall comply with the following requirements:

(1) A safety cap shall be installed over the exposed end of the internal delay fuse.
(2) The safety cap shall be of a different color than that of the fuse and shall be installed in such a manner that the fuse remains undamaged when removed.
(3) Electrically fired displays shall not require a safety cap, provided that no pyrotechnic composition is exposed.

4.14.3 Display Fireworks–Ground Salutes.

4.14.3.1 Display fireworks–ground salutes shall not exceed 3 in. (76 mm) in diameter × 3 in. (76 mm) in length.

4.14.3.2 The maximum quantity of salute powder in display fireworks–ground salutes shall not exceed 2.5 oz (71 g).

4.14.3.3 Display fireworks–ground salutes shall not be constructed using brittle plastic.

4.14.3.4 To allow the person igniting the aerial shells to retreat safely, the time delay between igniting the tip of the shell's fuse and the firing of the shell shall be not less than 3 seconds or more than 6 seconds.

4.14.3.5 Electrically ignited displays shall not require the delay period specified in 4.14.3.4.

4.14.4 Labeling.

4.14.4.1 Pyrotechnic articles intended for indoor use shall be so marked, and labels shall include the following information:

(1) Accurate performance characteristics of the device
(2) For fountains, gerbs, and other preloads, duration, height, and diameter of the effect, as applicable

4.14.4.2 Pyrotechnic articles marked for indoor use shall be permitted to be used outdoors.

4.14.4.3 Pyrotechnic articles marked by the manufacturer for indoor use shall be used indoors only.

4.14.4.4 All binary systems shall be labeled with the following information in addition to the general requirements:

(1) Type of contents and general use of the material
(2) Description of conditions of use, potential hazards, and required equipment with instructions for use
(3) Manufacturer's statement regarding whether the material is permitted for indoor use and the conditions under which the material is to be used

4.14.4.5 All binary materials intended for indoor use shall be preweighed, premeasured, prepackaged, and identified by the manufacturer as permitted for indoor use.

4.14.5 Requirements for Display Fireworks Aerial Devices. In addition to the general requirements, the requirements of 4.14.5.1 through 4.14.5.6 shall apply to aerial devices for display fireworks.

4.14.5.1 Aerial shells, mines, and comets shall be classified and described only in terms of the inside diameter of the mortar from which they are to be fired.

4.14.5.2* As a minimum, display fireworks manufactured on or after September 30, 2007, shall be conspicuously marked with the following information:

(1) The size of the display fireworks device, if applicable
(2) A description of the type of device and the effect(s)
(3) *A warning statement that reads as shown in Figure 4.14.5.2



FIGURE 4.14.5.2 Warning Statement on Fireworks Aerial Devices.

4.14.5.3 Single-break aerial salute shells shall be limited to a maximum size of 5 in. (127 mm) in diameter and length (exclusive of propellant charge). Minimum standards of use shall include the following:

(1) Nonmetal mortars shall be used.
(2) Mortars used for salutes over 3 in. (76 mm) in diameter and length (exclusive of propellant charge) shall be individually supported and separated from other mortars by 10 times the inside diameter of the mortar.
(3) Remote ignition or use of an added 5-second minimum delay fuse extension shall be used.
(4) All salute shells shall be loaded into mortars prior to the display and shall not be reloaded during a display.

4.14.5.4 Multiple-break shells with salutes and shells consisting of multiple-salute inserts or components shall meet the following requirements:

(1) Final or "bottom" shots (salutes) on multiple-break shells shall not exceed the criteria for single-break salutes.
(2) Aerial shells containing multiple salutes shall consist of component salutes not exceeding 3 in. (76 mm) and 3 oz (85 g) individually.
(3) Requirements of use and operator restrictions described for single-break salutes shall apply, except that multibreak shells shall be permitted to be fired from steel mortars buried in the ground, troughs, or drums.

4.14.5.5 The label or wrapper of any type of aerial salute shall be marked with the word *salute*.

4.14.5.6 Multiple tube fireworks devices, such as finale or barrage boxes or Roman candle batteries or cakes, shall have instructions for the placement and stabilization of the devices necessary to prevent tipover during use.

Copyright National Fire Protection Association
Provided by IHS under license with NFPA
No reproduction or networking permitted without license from IHS
Not for Resale

Chapter 5 Storage of Display Fireworks, Pyrotechnic Articles, Salute Powder, Pyrotechnic and Explosive Compositions, and Black Powder

5.1 General Requirements.

5.1.1 Display fireworks, pyrotechnic articles, salute powder, pyrotechnic and explosive compositions, and Black Powder shall be stored in magazines at all times, except during manufacture, packaging, transportation, or use.

5.1.1.1 Bulk salute and bulk salute powder shall be stored only in Type 1 or Type 2 magazines.

5.1.1.2 The following shall be stored only in Type 1, Type 2, or Type 4 magazines:

(1) Display fireworks that are not bullet sensitive
(2) Pyrotechnic articles categorized as Explosives 1.3, other than bulk salute and bulk salute powder
(3) Black Powder

5.1.2 Magazines containing display fireworks and pyrotechnic articles that are not classified as Explosives 1.4 shall be separated from inhabited buildings, passenger railways, and public highways by the distances specified in Table 4.6.4.1 or Table 4.6.4.4.

5.1.3 Magazines containing display fireworks and pyrotechnic articles that are not classified as Explosives 1.4 shall be separated from other magazines by the distances specified in Table 4.6.4.1 or Table 4.6.4.4 and from other plant buildings by the distances specified in Table 4.6.3, Table 4.6.4.1, or Table 4.6.6 as applicable.

5.1.4 Magazines containing Black Powder shall be separated from inhabited buildings, passenger railways, public highways, and other magazines by the distances specified in Table 4.6.4.7.

5.2 Magazine Construction — General.

5.2.1 General.

5.2.1.1 Magazines shall be constructed to comply with Section 5.2 or in a manner equivalent to the requirements of Section 5.2.

5.2.1.2 The ground around magazines shall be graded so that water drains away from the magazine.

5.2.1.3 Exposed ferrous metal shall not be permitted on the interior of the magazine where it might contact material stored within.

5.2.2 Heating.

5.2.2.1 The area between the heating unit and the magazine shall be cleared of all combustible materials.

5.2.2.2 Magazines requiring heat shall be heated by either hot-water radiant heating within the magazine building or by indirect warm-air heating.

5.2.2.3 Indirect warm air shall be heated by either hot-water coils or low-pressure [gauge pressure of 15 psi (103 kPa) or less] steam coils located outside the magazine building.

5.2.2.4 Magazine heating systems shall meet the following requirements:

(1) Radiant heating coils within the building shall be installed so that explosive materials or their containers cannot contact the coils and so that air is free to circulate between the coils and the explosives.
(2) The surface temperature of radiant heating coils shall not exceed 165°F (74°C).
(3) Heating ducts shall be installed so that the hot air discharge from the ducts is not directed against explosive materials or their containers.
(4) The heating system shall be controlled so that the ambient temperature of the magazine does not exceed 130°F (54°C).
(5) Any electric fan or pump used in the heating system shall be located outside the magazine, separate from the magazine walls, and shall be grounded.
(6) Any electric motor and any controls for electric heating devices used to heat water or produce steam shall have overload devices and disconnects that comply with NFPA 70, *National Electrical Code*.
(7) All electrical switchgear shall be located at least 25 ft (7.6 m) from the magazine.
(8) Any fuel-fired heating source for the hot water or steam shall be separated from the magazine by a distance of not less than 25 ft (7.6 m).
(9) Explosive materials stored in magazines shall be arranged so that uniform circulation of air is ensured.

5.2.3 Lighting.

5.2.3.1 Where lighting is necessary within the magazine, the following sources of lighting shall be permitted:

(1) Electric safety flashlights
(2) Electric safety lanterns
(3) Chemiluminescent lighting
(4) Electric light source outside the magazine that is aimed at the entrance

5.2.3.2 Where electric lighting is used within a magazine, the installation shall meet the following requirements for hazardous locations in accordance with NFPA 70, *National Electrical Code*:

(1) Junction boxes containing fuses or circuit breakers and electrical disconnects shall be located at least 25 ft (7.6 m) from the magazine.
(2) Junction boxes located within the magazine shall not have openings and shall be equipped with close-fitting covers.
(3) Disconnects, fuses, and circuit breakers shall be protected by a voltage surge arrester capable of handling 2500 amperes for 0.1 second.
(4) All wiring from switches, both inside and outside the magazine, shall be installed in rigid conduit.
(5) Wiring from switches located inside and outside the magazine that leads into the magazine shall be installed underground.
(6) Conduit and light fixtures inside the magazine shall be protected from physical damage by guards or by location.
(7) Light fixtures shall be enclosed to prevent sparks or hot metal from falling on the floor or onto material stored in the magazine.
(8) Lights inside magazines shall not be left on when the magazines are unattended.

5.2.4 Ventilation.

5.2.4.1 Where required in the magazine, ventilation shall be provided to protect the stored materials for the specific area in which the plant is located.

5.2.4.2 Stored materials shall be placed so that they do not interfere with ventilation and to prevent contact with masonry walls, steel, or other ferrous metal by means of a nonsparking lattice or equivalent lining.

--`,,```,,-`-`,,`,,`,`,,`---
Copyright National Fire Protection Association
Provided by IHS under license with NFPA
No reproduction or networking permitted without license from IHS
Not for Resale

5.3 Magazine Construction — Requirements for Specific Types.

5.3.1 Type 1 Magazine. A Type 1 magazine shall be a permanent structure, such as a building or igloo, that is bullet resistant, fire resistant, theft resistant, weather resistant, and ventilated and shall comply with the following:

(1) Walls and doors shall be bullet resistant and shall be constructed in accordance with any of the specifications in Annex B.
(2) The roof shall be constructed of any type of structurally sound material that is or has been made fire resistant on the exterior.
(3) *Where the natural terrain around a Type 1 magazine makes it possible for a bullet to be shot through the roof and ceiling at such an angle that the bullet can strike the explosive materials within, either the roof or the ceiling shall be of bullet-resistant construction.
(4) The foundation shall be enclosed completely, and the following requirements also shall apply:
    (a) A wood foundation enclosure shall be covered on the exterior with not less than 26 gauge metal.
    (b) Openings provided for cross ventilation on the exterior of a wood foundation enclosure shall not be required to be covered with 26 gauge metal.
(5) The floor shall be constructed of wood or other equivalent material.
(6) Floors constructed of materials that can cause sparks shall meet one of the following requirements:
    (a) They shall be covered with a nonsparking surface.
    (b) The packages of explosive material shall be packed on pallets of nonsparking material.
(7) Type 1 magazines shall be ventilated to prevent dampness or heating of explosives, and the following requirements also shall apply:
    (a) Ventilation openings shall be screened to prevent entrance of sparks.
    (b) Ventilators in sidewalls shall be offset or shielded.
    (c) Magazines with foundation and roof ventilators, with air circulating between the sidewalls and floor and between the sidewalls and ceiling, shall have a wood-lattice lining or equivalent means to prevent packages from being stacked against the sidewalls and blocking air circulation.
    (d) Magazines specified in 5.3.1(7)(c) shall be provided with 2 in. (51 mm) air space between the sidewalls and the floor.
(8) Each door of the magazine shall be equipped with one of the following locking systems:
    (a) Two mortise locks
    (b) Two padlocks in separate hasps and staples
    (c) A mortise lock and a padlock
    (d) A mortise lock that needs two keys to be opened
    (e) A three-point lock or an equivalent lock that secures the door to the frame at more than one point
(9) Padlocks shall comply with all of the following requirements:
    (a) They shall be made of steel.
    (b) They shall have at least five tumblers.
    (c) They shall have at least a ⅜ in. (9.5 mm), case-hardened shackle.
    (d) They shall be protected by steel hoods installed to discourage the insertion of bolt cutters.
(10) Doors secured by an internal bolt shall not require additional locking devices.
(11) Hinges and hasps shall be fastened securely to the magazine.
(12) All locking hardware shall be secured to the door frame.

5.3.2 Type 2 Magazine.

5.3.2.1 General. A Type 2 magazine shall be a portable or mobile structure, such as a box, skid-magazine, trailer, or semi-trailer that is fire resistant, theft resistant, weather resistant, and ventilated.

5.3.2.2 Bullet Resistance. Type 2 magazines shall be bullet resistant if used for outdoor storage.

5.3.2.3 Type 2 Outdoor Magazine. A Type 2 outdoor magazine shall comply with the following requirements:

(1) The walls and roof or ceiling shall be constructed according to the provisions of 5.3.1(1), (2), and (3).
(2) The doors shall be constructed as follows:
    (a) They shall be made of metal, constructed in accordance with the provisions of 5.3.1(1).
    (b) They shall have a metal exterior with an inner door meeting the provisions of 5.3.1(1).
(3) Floors constructed of ferrous metal shall be covered with a nonsparking surface.
(4) A top-opening magazine shall have a lid that overlaps the sides by at least 1 in. (25.4 mm) when in the closed position.
(5) The magazine shall be supported so that its floor does not contact the ground directly.
(6) Magazines less than 3 ft^3 (0.77 m^3) in size shall be fastened securely to a fixed object to prevent theft of the entire magazine.
(7) Hinges, hasps, locks, and locking hardware shall comply with 5.3.1(8), excluding padlocks on vehicular magazines, which are not required to be protected by steel hoods.
(8) Wherever a vehicular magazine is left unattended, one of the following actions shall be taken:
    (a) The wheels shall be removed.
    (b) The kingpins shall be locked.
    (c) The vehicular magazine shall be otherwise immobilized.

5.3.2.4 Type 2 Indoor Magazines. A Type 2 indoor magazine shall comply with the following provisions:

(1) The magazine shall have substantial wheels or casters to facilitate its removal from the building in case of emergency.
(2) The cover of the magazine shall have substantial strap hinges, and a means for locking shall be provided as follows:
    (a) The magazine shall be kept locked with a five-tumbler padlock or its equivalent.
    (b) The magazine shall be permitted to be unlocked during the placement or removal of explosive materials.
(3) The magazine shall be painted red, and the top shall bear the words in white letters at least 3 in. (76 mm) high, as shown in Figure 5.3.2.4.
(4) Magazines constructed of wood shall meet the following requirements:
    (a) They shall have sides, bottoms, and covers or doors of 2 in. (51 mm) hardwood that are braced at the corners.
    (b) They shall be covered with sheet metal of not less than 26 gauge.
    (c) Nails exposed to the interior of the magazines shall be countersunk.

Copyright National Fire Protection Association
Provided by IHS under license with NFPA
No reproduction or networking permitted without license from IHS
Not for Resale

(5) Magazines constructed of metal shall meet the following requirements:
   (a) They shall be of 12 gauge sheet metal.
   (b) They shall be lined with a nonsparking material.
   (c) The edges of metal covers shall overlap the sides by at least 1 in. (25 mm).



FIGURE 5.3.2.4 Warning Statement on Type 2 Indoor Magazines.

5.3.3 Type 3 Magazine. A Type 3 magazine (day box) shall be a portable structure that is fire resistant, theft resistant, and weather resistant, and shall comply with the following provisions:

(1) The magazine shall be equipped with a five-tumbler padlock.
(2) Magazines constructed of wood shall meet the following requirements:
   (a) They shall have sides, bottoms, and covers or doors of 4 in. (102 mm) hardwood that are braced at the corners.
   (b) They shall be covered with sheet metal of not less than 26 gauge.
   (c) Nails exposed to the interior of the magazine shall be countersunk.
(3) Magazines constructed of metal shall meet the requirements of 5.3.2.4(5).

5.3.4 Type 4 Magazine. A Type 4 magazine shall be a permanent, portable, or mobile structure such as a building, igloo, box, semitrailer, or other mobile container that is fire resistant, theft resistant, and weather resistant.

5.3.4.1 Type 4 Outdoor Magazine. A Type 4 outdoor magazine shall comply with the following provisions:

(1) The magazine shall be constructed of the following:
   (a) Masonry
   (b) Wood covered with sheet metal, fabricated metal, or a combination of these materials
(2) Doors shall be metal or wood covered with metal.
(3) Permanent magazines shall comply with 5.3.1(4) and (8).
(4) Vehicular magazines shall comply with 5.3.2.3(7) and shall be immobilized where unattended, as described in 5.3.2.3(8).

5.3.4.2 Type 4 Indoor Magazine. A Type 4 indoor magazine shall comply with all the provisions of 5.3.2.4.

5.4 Storage Within Magazines.

5.4.1 Magazines shall be supervised at all times by a competent person at least 21 years old who shall be responsible for enforcing all safety precautions.

5.4.2* All magazines containing explosives shall be inspected at intervals not exceeding 7 days to determine whether there has been unauthorized or attempted entry or whether there has been unauthorized removal of the magazines.

5.4.3* Magazine doors shall be kept closed and shall be kept locked at all times when the facility is not in operation.

5.4.4 Magazine doors shall not be required to be closed and locked during placement or removal of explosive materials or during inspection.

5.4.5* Containers of explosive materials shall be piled in a stable manner and laid flat with top side up.

5.4.6 The following shall apply to containers of explosive materials:

(1) Containers shall not be opened, unpacked, or repacked inside of or within 50 ft (15.2 m) of a magazine or in close proximity to other explosives.
(2) Fiberboard containers shall be permitted to be opened, unpacked or repacked inside of or within 50 ft (15.2 m) of a magazine.

5.4.7 Tools used for opening containers of explosive materials shall be nonsparking, unless they are metal slitters used for opening fiberboard containers.

5.4.8 Magazines shall be used exclusively for the storage of explosive and pyrotechnic materials.

5.4.8.1 Metal tools other than nonferrous conveyors shall not be stored in magazines.

5.4.8.2 Ferrous metal conveyor stands protected by a coat of paint shall be permitted to be stored within magazines.

5.4.9 Magazine floors shall be swept regularly and kept clean, dry, and free of grit, paper, empty packing materials, and rubbish.

5.4.9.1 Brooms and other cleaning utensils shall not have spark-producing metal parts.

5.4.9.2 Sweepings from magazine floors shall be disposed of in accordance with the manufacturer's instructions.

5.4.10 Where any explosive or pyrotechnic material has deteriorated to the extent that it has become unstable or dangerous, the person responsible shall immediately contact the manufacturer for assistance.

5.4.11 Before repairs are made to the interior of a magazine, all explosive or pyrotechnic material shall be removed, and the interior shall be cleaned.

5.4.12 Before repairs are made to the exterior of a magazine where there is a possibility of causing sparks or fire, all explosive and pyrotechnic material shall be removed.

5.4.13 Explosive or pyrotechnic material removed from a magazine undergoing repair shall be stored as follows:

(1) The material shall be either placed in another magazine or placed a safe distance from the magazine, where it shall be guarded and protected properly.
(2) Upon completion of the repairs, the material shall be returned promptly to the magazine.

Copyright National Fire Protection Association
Provided by IHS under license with NFPA
No reproduction or networking permitted without license from IHS
Not for Resale

5.5 Miscellaneous Safety Precautions.

5.5.1 The following shall not be permitted inside of or within 50 ft (15 m) of a magazine:

(1) Smoking
(2) Matches
(3) Open flames
(4) Spark-producing devices
(5) Firearms, other than firearms carried by authorized security personnel

5.5.2 The area around a magazine shall be kept clear of brush, dried vegetation, leaves, and similar combustibles for a distance of at least 25 ft (7.6 m).

5.5.3 Combustible materials shall not be stored within 50 ft (15.2 m) of a magazine.

5.6 Requirements for Shipping Buildings for Display Fireworks.

5.6.1 Shipping buildings shall be separated from process buildings in accordance with the distances specified in Table 4.6.3.

5.6.2 Shipping buildings shall be separated from inhabited buildings, passenger railroads, public highways, and magazines in accordance with the distances specified in Table 4.6.4.1.

5.6.3* Separation distances for shipping buildings for storage of display fireworks shall be in accordance with Table 4.6.4.1 or Table 4.6.4.4, as appropriate, with a maximum of 50,000 lb (22,680 kg) net weight of display fireworks permitted to be stored.

5.6.4 Separation distances for shipping buildings for the storage of finished salutes shall be in accordance with Table 4.6.4.4, with a maximum of 500 lb (227 kg) net weight of finished salutes permitted to be stored.

5.6.5 All electrical equipment and fixtures in a shipping building shall meet the requirements for hazardous locations in accordance with NFPA 70, *National Electrical Code*.

5.6.6 Display fireworks awaiting packing and shipping shall be permitted to be stored in a shipping building overnight, provided that the building is fire resistant and theft resistant.

5.6.6.1 The building shall be locked when not in operation.

5.6.6.2 Windows shall be guarded with bars or similar protection.

5.7 Shipping Buildings.

5.7.1 Shipping buildings used for storage shall meet the same requirements as magazines for the methods and types of construction, quantity limitations, and tables of distances.

5.7.2 Shipping buildings not used for storage shall meet the same requirements as process buildings for the methods and types of construction, and the same quantity limitations and tables of distances as magazines.

5.7.3 For the purposes of applying Table 4.6.4.1, a shipping building for display fireworks shall be considered a magazine.

5.7.4 Shipping buildings shall not be used as process buildings.

5.7.5 Display fireworks, consumer fireworks, pyrotechnic articles, pyrotechnic devices, pyrotechnic materials, pyrotechnic special effects, pyrotechnics, fusees, electric matches, igniters, igniter cord, nondetonating fuse, fuses, black match, quick match, and other pyrotechnic devices and compositions shall be permitted to be stored in shipping buildings complying with 5.7.1.

5.7.6 Pyrotechnic or explosive compositions in shipping buildings shall remain in sealed containers.

5.7.7 Loose pyrotechnic or explosive compositions shall not be permitted in shipping buildings.

5.7.8 Fireworks and other pyrotechnic or explosive devices in shipping buildings shall be permitted to be in open cartons or bins, or both, provided all fireworks in open cartons or bins are secured so they will not roll or fall.

5.7.9* Tools, equipment, supplies and documents appropriate to conduct day-to-day operations shall be permitted to be stored and used in shipping buildings.

5.7.10 Tools and equipment shall be made of or covered with non-spark-producing materials.

5.7.11 Refuse containers shall be permitted in shipping buildings.

5.7.12 Housekeeping requirements for magazines shall apply to shipping buildings.

5.7.13 Security requirements for magazines shall apply to shipping buildings used for storage.

Chapter 6 Storage of Consumer Fireworks

6.1 Applicability.

6.1.1* Storage of consumer fireworks at manufacturing and distribution facilities shall comply with the requirements of this chapter.

6.1.2 The requirements of this chapter shall apply to the following:

(1) Permanent buildings and structures including the following:
   (a) Consumer fireworks storage buildings or areas
   (b) Consumer fireworks work buildings, rooms, or areas
(2) Temporary facilities including the following:
   (a) Trailers
   (b) Semitrailers
   (c) Metal shipping containers

6.1.3 This chapter shall not apply to buildings or facilities where the net weight of the pyrotechnic content of consumer fireworks stored does not exceed 125 lb, or 250 lb where the building is protected throughout with an approved automatic sprinkler system installed in accordance with NFPA 13, *Standard for the Installation of Sprinkler Systems*.

6.1.4 Consumer fireworks storage buildings shall not be used as a magazine. Consumer fireworks shall be permitted to be stored in a magazine.

6.1.5 Consumer fireworks work buildings shall not be used as process buildings. Consumer fireworks shall be permitted to be processed in a process building.

6.1.6* For the purposes of this chapter, the terms *consumer fireworks* and *pyrotechnic articles* shall mean assembled devices that have been approved by the Department of Transportation as Fireworks UN0336 and Articles, Pyrotechnic UN0431 and UN0432.

--`,,```,,-`-`,,`,,`,`,,`---

Copyright National Fire Protection Association
Provided by IHS under license with NFPA
No reproduction or networking permitted without license from IHS
Not for Resale

6.2 General Requirements for the Storage of Consumer Fireworks.

6.2.1 Consumer fireworks storage buildings shall comply with the requirements of this chapter.

6.2.2 Work rooms or areas shall be permitted in consumer fireworks storage buildings, provided such work rooms or areas comply with Section 6.13.

6.2.3 Exterior door and window openings in consumer fireworks storage buildings shall be equipped with a means for locking.

6.2.4 Consumer fireworks storage buildings shall not be used for residential occupancies and shall not be located in residential areas.

6.2.5 Finished consumer fireworks at a manufacturing or distribution facility shall be stored in consumer fireworks storage buildings, trailers, semitrailers, metal shipping containers, or magazines.

6.2.6 Receiving, picking, packing, packaging, and shipping shall be permitted in consumer fireworks storage buildings or areas.

6.2.7* Third Party Testing.

6.2.7.1 Consumer fireworks shall be tested and certified by an approved, independent third party testing agency for compliance with the regulation of the Consumer Product Safety Commission (CPSC) as set forth in 16 CFR 1500 and 1507, using an approved test sampling plan.

6.2.7.2 Shipping cartons containing only consumer fireworks complying with 6.2.7 shall be marked in an approved manner to indicate such compliance.

6.3 Permit Requirements.

6.3.1 Permits. Where required, a permit shall be obtained to construct, erect, or operate any consumer fireworks storage or work building, room, or area.

6.3.2 Plans.

6.3.2.1 Where required, plans for consumer fireworks storage or work buildings, rooms, or areas shall be submitted to the AHJ with the permit application.

6.3.2.2 The plans shall include the design, details, and specifications for the following:

(1) Distances from public ways, buildings, facilities, magazines, motor vehicle fuel–dispensing stations, retail propane dispensing stations, flammable and combustible liquid aboveground tank storage, and flammable gas and flammable liquefied gas bulk aboveground storage and dispensing areas within 30.5 m (100 ft) of the building used to store or handle consumer fireworks
(2) Vehicle access and parking areas
(3) Location and type of portable fire extinguishers
(4) Floor plan and layout of storage and handling to indicate compliance with this chapter
(5) Means of egress
(6) Construction details

6.4 Construction.

6.4.1 Buildings and Structures. Consumer fireworks shall be stored only in the following buildings or structures, provided that the building or structure does not exceed one story in height and does not contain a basement:

(1) Buildings or structures constructed in accordance with the building code enforced by the AHJ
(2) Buildings or structures constructed in accordance with 6.4.2
(3) Magazines meeting the requirements in Chapter 4
(4) Trailers, semitrailers, and metal shipping containers that are separated by at least 20 ft (6.1 m) from any building or structure other than trailers, semitrailers, or metal shipping containers

6.4.2 Construction Materials. The following construction requirements shall apply to consumer fireworks storage buildings in jurisdictions that have not adopted a building code:

(1) Buildings having an area not greater than 8000 ft^2 (743 m^2) shall be permitted to be constructed of any approved construction materials.
(2) Buildings having an area greater than 8000 ft^2 (743 m^2) shall be constructed in accordance with one of the following:
    (a) Buildings shall be constructed of noncombustible or limited-combustible materials.
    (b) Buildings with exterior walls having a fire resistance rating of not less than 2 hours shall be permitted to have the roof decking and its supporting structure and interior partitions constructed of combustible materials.
(3) Roof coverings for any building shall have a minimum rating of Class C as determined in accordance with NFPA 256, *Standard Methods of Fire Tests of Roof Coverings*.

6.4.3 Multiple-Use Buildings.

6.4.3.1 Where consumer fireworks storage is located in a building containing other tenants, the consumer fireworks storage area shall be separated from the other tenants by fire barriers having a fire resistance rating of not less than 2 hours.

6.4.3.1.1 Openings in the fire barriers shall not be permitted.

6.4.3.1.2 Any penetrations of the fire barriers shall be protected in accordance with NFPA *101*, *Life Safety Code*.

6.4.3.2 Office areas ancillary to the consumer fireworks storage building shall be separated from the consumer fireworks storage area by fire barriers having a fire resistance rating of not less than 1 hour.

6.4.3.2.1 Door and window openings in the fire barrier wall shall be protected by self-closing fire doors or fixed fire windows having a fire protection rating of not less than 1 hour and shall be installed in accordance with NFPA 80, *Standard for Fire Doors and Fire Windows*.

6.4.3.2.2 Any other openings or penetrations in the fire barrier wall shall be protected in accordance with NFPA *101*, *Life Safety Code*.

6.4.4 Interior Wall and Ceiling Finish. Interior wall and ceiling finish shall be Class A, Class B, or Class C in accordance with NFPA *101*, *Life Safety Code*.

6.5 Fire Protection.

6.5.1* Automatic Sprinkler System. An automatic sprinkler system installed in accordance with NFPA 13, *Standard for the Installation of Sprinkler Systems*, shall be provided in consumer fireworks storage buildings greater than 12,000 ft^2 (1115 m^2).

Copyright National Fire Protection Association
Provided by IHS under license with NFPA
No reproduction or networking permitted without license from IHS
Not for Resale

6.5.1.1 The automatic sprinkler system shall be designed using the following criteria for the areas in which the consumer fireworks are stored in DOT-approved packaging:

(1) Consumer fireworks stored in DOT-approved packaging shall be considered as a Class IV commodity.
(2) Consumer fireworks stored to a height not greater than 10 ft (3 m) in racks, or 12 ft (3.7 m) otherwise, shall be classified as an Ordinary Hazard (Group 2) occupancy.
(3) Consumer fireworks stored to a height not greater than 12 ft (3.7 m) in racks, but greater than 10 ft (3 m), shall be classified as an Extra Hazard (Group 1) occupancy.
(4) Consumer fireworks stored to a height greater than 12 ft (3.7 m) shall be protected by an automatic sprinkler system designed using a fire control approach or a special design approach in accordance with NFPA 13, *Standard for the Installation of Sprinkler Systems*.

6.5.1.2 The waterflow alarm device shall be arranged to activate audible and visible alarms throughout the facility in accordance with *NFPA 72, National Fire Alarm Code*.

6.5.2 Portable Fire Extinguishers.

6.5.2.1 Installation. Portable fire extinguishers shall be installed in accordance with NFPA 10, *Standard for Portable Fire Extinguishers*.

6.5.2.2 Minimum Number. Every consumer fireworks storage or work building shall have not less than two portable fire extinguishers with a minimum rating of 2A.

6.5.2.3 Pressurized Water Type. At least one of the required fire extinguishers shall be of the pressurized water type.

6.5.2.4 Multipurpose Dry Chemical Type. At least one of the required fire extinguishers shall be of the multipurpose dry chemical type having a minimum rating of 4A.

6.5.2.5 Location. Portable fire extinguishers for consumer fireworks storage or work buildings shall be located such that the maximum distance of travel to reach an extinguisher from any point shall not exceed 75 ft (23 m), as specified in NFPA 10, *Standard for Portable Fire Extinguishers*.

6.5.3 Smoke and Heat Vents. Smoke and heat vents designed and installed in accordance with NFPA 204, *Standard for Smoke and Heat Venting*, shall be provided in consumer fireworks storage buildings exceeding 50,000 ft^2 (4644 m^2) in undivided area.

6.6* Site Requirements for Fire Department Access. Any portion of an exterior wall of a building or other defined perimeter of a consumer fireworks storage facility shall be accessible within 150 ft (46 m) of a public way or an approved fire apparatus access.

6.7 Separation Distances.

6.7.1* Consumer fireworks storage or work buildings at distribution facilities shall be separated from adjacent permanent buildings and structures in accordance with Table 6.7.1.

6.7.2 Consumer fireworks storage or work buildings at manufacturing facilities shall be separated from inhabited buildings, passenger railways, public highways, and other storage buildings in accordance with the distances specified in Table 4.6.6, and shall be separated from process buildings and areas by the distances specified in Table 4.6.3.

Table 6.7.1 Separation Distance for Consumer Fireworks Storage or Work Buildings

Separation Distances		Exterior Wall Fire Resistance Rating (hr)	Exterior Wall Opening Protection Rating (hr)
ft	m		
< 5	< 1.5	3	3
≥ 5 to < 10	≥ 1.5 to < 3	2	1½
≥10 to < 60	≥ 3 to < 18.3	1	¾
≥ 60	≥ 18.3	0	0

6.7.3 Other Separation Distances.

6.7.3.1 Consumer fireworks storage or work buildings shall not be located within 50 ft (15.2 m) of the following:

(1) Motor vehicle fuel–dispensing station dispensers
(2) Retail propane–dispensing station dispensers
(3) Compressed natural gas dispensing facilities
(4) Aboveground storage tanks for flammable or combustible liquid, flammable gas, or flammable liquefied gas

6.7.3.2 Consumer fireworks storage or work buildings shall not be located within 300 ft (91.2 m) of any aboveground bulk storage or bulk dispensing area for the following:

(1) Flammable or combustible liquid
(2) Flammable gas
(3) Flammable liquefied gas

6.8 Means of Egress.

6.8.1 Means of egress in permanent consumer fireworks storage or work buildings or areas shall comply with the applicable requirements of NFPA *101, Life Safety Code*.

6.8.2 Trailers, semitrailers, and metal shipping containers that are not normally occupied shall not be required to comply with NFPA *101, Life Safety Code*.

6.8.3 Doors.

6.8.3.1 Exterior exit doors shall open outward.

6.8.3.2 Doors in the means of egress shall be at least 36 in. (910 mm) wide and kept free of obstructions.

6.8.3.3 Exit doors shall be equipped with panic hardware.

6.8.3.4 Exit doors shall be unlocked when the building is occupied.

6.8.4 Aisles.

6.8.4.1 Aisles shall be at least 36 in. (910 mm) wide and shall be kept free of obstructions.

6.8.4.2 Dead end aisles shall not exceed 50 ft (15.2 m) in length.

6.8.5 Egress Travel Distance. Exits provided for consumer fireworks storage or work buildings or areas shall be located such that the maximum egress travel distance as measured from the remotest point to an exit along the natural and unobstructed path of egress travel shall not exceed 200 ft (60.8 m).

Copyright National Fire Protection Association
Provided by IHS under license with NFPA
No reproduction or networking permitted without license from IHS
Not for Resale

6.9 Exit Signs and Emergency Lighting.

6.9.1 Exit Signs.

6.9.1.1 Exits in consumer fireworks storage or work buildings or areas shall be marked by an approved exit sign in accordance with NFPA *101*, *Life Safety Code*.

6.9.1.2 Exit signs shall be required to be self-luminous or internally or externally illuminated.

6.9.2 Emergency Lighting.

6.9.2.1 The means of egress, including the exit discharge, shall be illuminated whenever the facility is occupied in accordance with NFPA *101*, *Life Safety Code*.

6.9.2.2 Emergency lighting shall be provided for consumer fireworks storage or work buildings or areas and shall comply with NFPA *101*, *Life Safety Code*.

6.10* Electrical Requirements. Electrical fixtures and wiring shall comply with NFPA 70, *National Electrical Code*.

6.11 Operations.

6.11.1 Receiving, storing, picking from cartons, packing into cartons, packaging into retail packages including assortments, shipping, and other similar operations involving finished consumer fireworks shall be permitted in consumer fireworks storage or work buildings, rooms, or areas that meet the requirements of this chapter.

6.11.2 Picking, sorting, packaging, packing, and other similar operations involving finished consumer fireworks shall be conducted in consumer fireworks work buildings or consumer fireworks work rooms or areas in consumer fireworks storage buildings that meet the requirements of this chapter.

6.11.3 Exterior doors and windows shall be kept locked when the building is not occupied or otherwise attended.

6.11.4* Consumer fireworks shall be stored in accordance with NFPA 230, *Standard for the Fire Protection of Storage*, and as follows:

(1) Consumer fireworks shall be stored in DOT-approved packaging. *(See 3.3.25.)*
(2) Cartons shall be stacked neatly and in a stable manner.
(3) Consumer fireworks returned to these buildings shall be permitted to be stored temporarily in cartons until repackaging or repacking can be performed.

6.11.5 Firearms, unless carried by authorized personnel or law enforcement personnel, shall not be permitted inside a consumer fireworks storage or work building, room, or area or within 50 ft (15.2 m) of stored consumer fireworks.

6.11.5.1 Smoking.

6.11.5.1.1 Smoking materials, matches, lighters, or open flame devices shall not be allowed within 50 ft (15.2 m) of any area where fireworks or other pyrotechnic materials are present.

6.11.5.1.2 Authorized smoking locations shall be so marked, shall contain designated receptacles for disposal of smoking materials, and shall be provided with at least one approved portable fire extinguisher for use on Class A fires.

6.11.5.2 Testing.

6.11.5.2.1 Testing of fireworks, pyrotechnic materials, and pyrotechnic and explosive compositions shall be performed only in a building or area specifically designated for that purpose.

6.11.5.2.2 The testing shall be conducted at a safe distance from other buildings.

6.11.6 Signs that read as follows in letters not less than 4 in. (102 mm) high on a contrasting background shall be conspicuously posted on the outside of any consumer fireworks storage building:

FIREWORKS — NO SMOKING

6.11.7* The operator of each consumer fireworks storage or work building or area shall prepare a written emergency response plan that provides specific directions to be followed in the event of a fire.

6.12 Housekeeping.

6.12.1 No loose Black Powder or other exposed pyrotechnic composition shall be permitted. If loose composition is discovered, it shall be removed immediately and disposed of in an approved manner.

6.12.2 Consumer fireworks storage or work buildings, rooms, or areas shall comply with the following:

(1) Interiors shall be kept clean, dry, and free of grit and rubbish.
(2) Tools used for cleaning up loose pyrotechnic composition shall not have spark-producing metal parts.
(3) Sweepings shall be disposed of in an approved manner.

6.12.3 The area around consumer fireworks storage or work buildings shall be kept clear of brush, dried vegetation, rubbish, and similar combustibles for a distance of at least 25 ft (7.6 m).

6.13 Consumer Fireworks Work Buildings, Rooms, or Areas.

6.13.1 Consumer fireworks work buildings, rooms, or areas shall comply with this section.

6.13.2 The quantity of consumer fireworks being handled outside of DOT-approved packaging shall be limited to that necessary to conduct the operation.

6.13.3 Aisles shall be at least 48 in. (1.2 m) wide and shall be kept free of obstructions that reduce the required width.

6.13.4 Exit doors shall be kept free of obstructions.

6.13.5 Work rooms or areas shall be permitted in consumer fireworks storage buildings.

6.13.5.1 Work rooms or areas in consumer fireworks storage buildings shall be separated from stored consumer fireworks by a fire barrier wall having a fire resistance rating of at least 1 hour or by a separation distance of at least 25 ft (7.6 m).

6.13.5.2 Work rooms or areas in consumer fireworks storage buildings shall have at least two remotely located means of egress, with at least one means of egress not having to pass through a storage area.

6.13.6 Light fixtures within 25 ft (7.6 m) of any consumer fireworks shall have guards.

6.14 Trailers, Semitrailers, and Metal Shipping Containers.

6.14.1 Trailers, semitrailers, or metal shipping containers shall comply with this section.

6.14.2 Trailers, semitrailers, or metal shipping containers that are not normally occupied shall be permitted to be locked during operation.

Copyright National Fire Protection Association
Provided by IHS under license with NFPA
No reproduction or networking permitted without license from IHS
Not for Resale

6.14.3 Where an aisle is provided, the aisle shall be not less than 28 in. (710 mm) in clear width.

6.14.4 At least one pressurized water type fire extinguisher having a minimum rating of 2A shall be located within 75 ft (22.8 m).

6.14.5 Panic hardware on exit doors shall not be required.

6.14.6 Trailers, semitrailers, and metal shipping containers used for consumer fireworks storage shall be permitted to be placed side by side with no minimum separation distance and stacked to a maximum height of two units.

Chapter 7 Retail Sales of Consumer Fireworks

7.1* Applicability.

7.1.1* General Requirements. Retail sales of consumer fireworks in both new and existing buildings, structures, and facilities shall comply with the requirements of this chapter unless otherwise indicated.

7.1.1.1 New Facilities.

7.1.1.1.1 For the purpose of applying the requirements of this chapter, the following consumer fireworks retail sales (CFRS) facilities and stores shall be considered to be new:

(1) Permanent CFRS facilities and stores that are not initially occupied until after the effective date of this code, unless plans are submitted and accepted for review, plans have been approved for construction, or a building permit has been issued prior to the effective date of this code
(2) Permanent CFRS facilities and stores constructed prior to the effective date of this code and in which the retail sales of consumer fireworks have not been conducted either seasonally or year-round within one year prior to the effective date of this code
(3) Temporary CFRS facilities and stores

7.1.1.1.2 In a store where the area of the retail sales floor occupied by the retail displays of consumer fireworks is increased after the effective date of this code, such that the area exceeds the limits specified in 7.5.1.1(1), the building shall be considered to be a new CFRS facility.

7.1.1.2 Existing Facilities. For the purpose of applying the requirements of this chapter, CFRS facilities and stores not considered to be new as specified in 7.1.1.1 shall be considered to be existing.

7.1.1.3 Minimum Requirements. Existing life safety features that do not meet the requirements for new buildings but that exceed the requirements for existing buildings shall not be further diminished.

7.1.1.4 Modernization or Renovation. Any alteration or any installation of new equipment shall meet, as nearly as practicable, the requirements for new construction.

7.1.1.4.1 Only the altered, renovated, or modernized portion of an existing building, system, or individual component shall be required to meet the provisions of this code that are applicable to new construction.

7.1.1.4.2 If the alteration, renovation, or modernization adversely impacts required life safety features, additional upgrading shall be required.

7.1.1.4.3 Except where another provision of this code exempts a previously approved feature from a requirement, the resulting feature shall be not less than that required for existing buildings.

7.1.2 Facility Classification. The requirements of this chapter shall apply to the following:

(1) Permanent buildings and structures, including the following:
   (a) Stores
   (b) CFRS facilities
(2) Temporary facilities, including the following:
   (a) CFRS stands
   (b) Tents
   (c) Canopies
   (d) Membrane structures

7.2 Special Limits for Retail Sales of Consumer Fireworks.

7.2.1 Retail sales of consumer fireworks, including their related storage and display for sale of such fireworks, shall be in accordance with this code.

7.2.2* Retail sales of consumer fireworks shall be limited to mercantile occupancies defined in NFPA *101*, *Life Safety Code*.

7.2.3 Any building or structure used for the retail sales of consumer fireworks, including their related storage, shall comply with NFPA *101*, *Life Safety Code*, for mercantile occupancies, except as provided in this code.

7.2.4 Retail sales of display fireworks and pyrotechnic articles, including the related storage and display for sale of such fireworks and articles, shall be prohibited at a CFRS facility or store.

7.2.5 Retail sales of certain explosive devices prohibited by the *Child Safety Act of 1966*, including the related storage and display for sale of such devices, shall be prohibited at a CFRS facility or store.

7.2.6 The retail sales of pest control devices, including their related storage and display for sale, shall be prohibited at a CFRS facility or store.

7.2.7 The retail sales of fireworks that do not comply with the regulations of the U.S. Consumer Product Safety Commission as set forth in 16 CFR 1500 and 1507 and the regulations of the U.S. Department of Transportation as set forth in 49 CFR 100 to 178, including their related storage and display for sale, shall be prohibited.

7.3 General Requirements for All Retail Sales.

7.3.1 Exempt Amounts.

7.3.1.1 The requirements of this chapter shall not apply to CFRS facilities or stores where the consumer fireworks are in packages and where the total quantity of consumer fireworks on hand does not exceed 125 lb (net) [56.8 kg] of pyrotechnic composition or, in a building protected throughout with an approved automatic sprinkler system installed in accordance with NFPA 13, *Standard for the Installation of Sprinkler Systems*, 250 lb (net) [113.6 kg] of pyrotechnic composition.

7.3.1.2 Where the actual weight of the pyrotechnic composition of consumer fireworks is not known, 25 percent of the gross weight of the consumer fireworks, including packaging, shall be permitted to be used to determine the weight of the pyrotechnic composition.

Copyright National Fire Protection Association
Provided by IHS under license with NFPA
No reproduction or networking permitted without license from IHS
Not for Resale

7.3.2* Permits. Where required by state or local laws, ordinances, or regulations, a permit for the following shall be obtained:

(1) Construction, erection, or operation of the following:
   (a) Permanent building or structure
   (b) Temporary structure such as a stand, tent, or canopy used for the purpose of the retail display or sale of consumer fireworks to the public
(2) Storage of consumer fireworks in connection with the retail display or sale of consumer fireworks to the public

7.3.3 Plans. Plans for facilities other than stands and tents shall include the following:

(1) Minimum distances from the following:
   (a) Public ways
   (b) Buildings
   (c) Other CFRS facilities
   (d) Motor vehicle fuel–dispensing station dispensers
   (e) Retail propane-dispensing station dispensers
   (f) Flammable and combustible liquid aboveground tank storage
   (g) Flammable gas and flammable liquefied gas bulk aboveground storage and dispensing areas within 300 ft (91.5 m) of the facility used for the retail sales of consumer fireworks
(2) Vehicle access and parking areas
(3) Location and type of portable fire extinguishers
(4) Floor plan and layout of storage and displays to indicate compliance with this chapter and applicable state or local laws, ordinances, or regulations
(5) Means of egress
(6) Construction details

7.3.4* Fire Department Access. Any portion of an exterior wall of a building, sidewall of a tent, or other defined perimeter of a CFRS facility or store shall be accessible within 150 ft (45.7 m) of a public way or an approved fire apparatus access.

7.3.5 Construction of Buildings and Structures. Consumer fireworks shall only be permitted to be sold at retail in any of the following buildings or structures, provided that any new building or structure does not exceed one story in height:

(1) Permanent buildings or structures constructed in accordance with the building code enforced by the AHJ
(2) Tents, canopies, or temporary membrane structures complying with NFPA 102, *Standard for Grandstands, Folding and Telescopic Seating, Tents, and Membrane Structures*
(3) Temporary structures constructed in accordance with this chapter
(4) Temporary CFRS stands greater than 800 ft^2 (74 m^2) in area that also meet the requirements for a permanent structure
(5) Vehicles, such as vans, buses, trailers, recreational vehicles, motor homes, travel trailers, trucks, and automobiles, complying with the applicable requirements for CFRS stands

7.3.6 An automatic sprinkler system designed and installed in accordance with NFPA 13, *Standard for the Installation of Sprinkler Systems*, shall be provided throughout permanent CFRS facilities and stores in which CFRS are conducted in the following buildings:

(1) New buildings greater than 6000 ft^2 (557.2 m^2) in area
(2) Existing buildings greater than 7500 ft^2 (694 m^2) in area

7.3.6.1 Door and window openings in the fire barrier wall shall be protected by self-closing fire doors or fixed fire windows having a fire protection rating of not less than 1 hour and shall be installed in accordance with NFPA 80, *Standard for Fire Doors and Fire Windows*.

7.3.6.2 Any other openings or penetrations in the fire barrier wall shall be protected in accordance with NFPA *101*, *Life Safety Code*.

7.3.6.3 Every CFRS facility and store shall have no fewer than two portable fire extinguishers with a minimum rating of 2A, at least one of which shall be of the pressurized water type.

7.3.7 Storage Rooms. Storage rooms containing consumer fireworks in a new permanent CFRS facility or store shall be protected with an automatic sprinkler system installed in accordance with NFPA 13, *Standard for the Installation of Sprinkler Systems*, or separated from the retail sales area by a fire barrier having a fire resistance rating of not less than 1 hour.

7.3.8 Portable Fire Extinguishers.

7.3.8.1 Specification. Portable fire extinguishers shall be provided as required for extra (high) hazard occupancy in accordance with NFPA 10, *Standard for Portable Fire Extinguishers*.

7.3.8.2 Extinguisher Type. Where more than one portable fire extinguisher is required, at least one fire extinguisher shall be of the multipurpose dry chemical type if the facility is provided with electrical power.

7.3.8.3 Location. Portable fire extinguishers for permanent consumer fireworks retail sales facilities and stores shall be located so that the maximum distance of travel required to reach an extinguisher from any point does not exceed 75 ft (23 m), as specified in NFPA 10, *Standard for Portable Fire Extinguishers*.

7.3.9 Fire Alarms. A fire alarm system shall be provided as required by NFPA *101*, *Life Safety Code*.

7.3.10 Smoke Control.

7.3.10.1 Smoke and heat vents designed and installed in accordance with NFPA 204, *Standard for Smoke and Heat Venting*, shall be provided in the CFRS area of new permanent CFRS facilities or stores where the ceiling height is less than 10 ft (3.05 m) and the travel distance to reach an exit is greater than 25 ft (7.6 m).

7.3.10.2 The smoke and heat vents required by 7.3.10.1 shall be automatically activated by a smoke detection system installed throughout the CFRS area in accordance with *NFPA 72*, *National Fire Alarm Code*.

7.3.11 No Smoking Signs.

7.3.11.1 Smoking shall not be permitted inside or within 50 ft (15.5 m) of the CFRS area.

7.3.11.2 At least one sign that reads as follows, in letters at least 2 in. (51 mm) high on a contrasting background, shall be conspicuously posted at each entrance or within 10 ft (3.05 m) of every aisle directly serving the CFRS area in a store:

FIREWORKS — NO SMOKING

7.3.12 Distance from Bulk Dispensing and Bulk Storage.

7.3.12.1 CFRS facilities and stores shall not be located within 50 ft (15.2 m) of the following:

(1) Retail propane-dispensing station dispensers

Copyright National Fire Protection Association
Provided by IHS under license with NFPA
No reproduction or networking permitted without license from IHS
Not for Resale

(2) Aboveground storage tanks for flammable or combustible liquid, flammable gas, or flammable liquefied gas
(3) Compressed natural gas–dispensing station dispensers

7.3.12.2 New CFRS facilities and stores, existing CFRS stands and tents, and temporary CFRS facilities shall not be located within 50 ft (15.2 m) of motor vehicle fuel–dispensing station dispensers.

7.3.12.3 Existing CFRS facilities, other than CFRS stands, tents, and temporary facilities, and existing stores shall not be located within 25 ft (7.6 m) of motor vehicle fuel–dispensing station dispensers.

7.3.12.4 Fuel tanks on vehicles or other motorized equipment shall not be considered bulk storage.

7.3.12.5 Fuel storage for generators shall be in accordance with 7.4.9.2.

7.3.12.6 CFRS areas and storage areas shall not be located within 300 ft (91.2 m) of any aboveground bulk storage or bulk dispensing area for the following:

(1) Flammable or combustible liquid
(2) Flammable gas
(3) Flammable liquefied gas

7.3.13* Fire Safety and Evacuation Plan. For a CFRS facility or store, an approved fire safety and evacuation plan shall be prepared in writing and maintained current.

7.3.14 Means of Egress.

7.3.14.1 Number of Exits.

7.3.14.1.1 The minimum number of exits provided from the retail sales area shall be not less than three or as determined in accordance with NFPA *101*, *Life Safety Code*, whichever number is greater.

7.3.14.1.2 Required means of egress from the retail sales area shall not be allowed to pass through storage rooms.

7.3.14.2 Egress Travel Distance. Exits provided for the retail sales area of tents, membrane structures, canopies, and permanent CFRS facilities, including Class C stores, shall be located so that the maximum egress travel distance, measured from the most remote point to an exit along the natural and unobstructed path of egress travel, does not exceed 75 ft (22.9 m).

7.3.14.3 Aisles. Aisles serving as a portion of the exit access in CFRS areas shall comply with this paragraph.

7.3.14.3.1 Aisle Width.

7.3.14.3.1.1 Aisles shall have a minimum clear width of 48 in. (1.2 m).

7.3.14.3.1.2 The required width of aisles shall be maintained unobstructed at all times the facility is occupied by the public.

7.3.14.3.2* Aisle Arrangements.

7.3.14.3.2.1 Not less than one aisle shall be provided and arranged so that travel along the aisle leads directly to an exit.

7.3.14.3.2.2 Other required exits shall be located at, or within 10 ft (3.05 m) of, the end of an aisle or a cross-aisle.

7.3.14.3.2.3 Aisles shall terminate at an exit, another aisle, or a cross-aisle.

7.3.14.3.2.4 Dead-end aisles shall be prohibited.

7.3.14.3.2.5 Where more than one aisle is provided, not less than one cross-aisle shall have an unobstructed connection with every aisle, other than cross-aisles.

7.3.14.3.2.6 Cross-aisle connections shall be provided for each aisle at intervals not greater than 50 ft (15.2 m) as measured along the aisle.

7.3.14.3.2.7 Where cross-aisles are required, not less than one cross-aisle shall have at least one end terminate at, or within 10 ft (3.05 m) of, an exit.

7.3.14.4 Doors and Doorways. Doors and doorways used in the means of egress shall comply with this paragraph.

7.3.14.4.1 Egress doors shall be not less than 36 in. (910 mm) in width [providing a minimum of 32 in. (813 mm) clear width].

7.3.14.4.2 Every egress door that has a latching device shall be provided with panic hardware complying with NFPA *101*, *Life Safety Code*.

7.3.14.4.3 Means of egress doors shall be of the side-hinge swinging type and shall be arranged to swing in the direction of egress travel.

7.3.14.5 Exit Signs.

7.3.14.5.1 Exits shall be marked by an approved exit sign in accordance with NFPA *101*, *Life Safety Code*.

7.3.14.5.2 Exit signs shall be required to be self-luminous or internally or externally illuminated.

7.3.14.6 Emergency Lighting.

7.3.14.6.1 The means of egress, including the exit discharge, shall be illuminated whenever the facility is occupied in accordance with NFPA *101*, *Life Safety Code*.

7.3.14.6.2 Emergency lighting shall be provided for CFRS facilities and stores and shall comply with NFPA *101*, *Life Safety Code*.

7.3.15* Retail Sales Displays.

7.3.15.1 General. The requirements of this section shall apply only to CFRS areas, unless otherwise specifically indicated.

7.3.15.2* Height of Sales Displays. To provide for visual access of the retail sales area by the employees and customers, partitions, counters, shelving, cases, and similar space dividers shall not exceed 6 ft (1.8 m) in height above the floor surface inside the perimeter of the retail sales area.

7.3.15.2.1 Merchandise on display or located on shelves or counters or other fixtures shall not be displayed to a height greater than 6 ft (1.8 m) above the floor surface within the CFRS area.

7.3.15.2.2 Where located along the perimeter of the consumer fireworks retail sales area, the maximum height of sales displays shall be limited to 12 ft (3.66 m).

7.3.15.3* Flame Breaks.

7.3.15.3.1 Where continuous displays of consumer fireworks are located on shelving, cases, counters, and similar display fixtures, a flame break shall be provided so that the maximum distance between flame breaks does not exceed 16 ft (4.9 m) where measured along the length of the display.

Copyright National Fire Protection Association
Provided by IHS under license with NFPA
No reproduction or networking permitted without license from IHS
Not for Resale

7.3.15.3.2 The flame break shall extend as follows:

(1) From the display surface to not less than 6 in. (150 mm) above the full height of the displayed merchandise or to the underside of the display surface directly above
(2) For the full depth of the displayed merchandise

7.3.15.3.3* Where packaged fireworks merchandise is displayed on the same level as individual unpackaged fireworks devices, the flame break required in 7.3.15.3.1 shall not be required where both of the following criteria are met:

(1) The length of the display level containing individual unpackaged fireworks devices is interrupted by packaged fireworks merchandise, or open space, or any combination thereof, having a continuous length of not less than 8 ft (2.4 m).
(2) The distance between flame breaks does not exceed 32 ft (9.8 m).

7.3.15.3.4 Where a merchandise display level contains packaged fireworks merchandise, such merchandise shall be permitted to be displayed in a continuous length on the same level, where the display does not exceed 32 ft (9.8 m) without the flame break required in 7.3.15.3.1.

7.3.15.3.5 An aisle having a minimum width of 48 in. (1.2 m) shall be permitted to substitute for the flame break required in 7.3.15.3.1.

7.3.15.3.6 Where displays of merchandise face aisles that run along both long sides of the display fixtures or display surface, a flame break shall be installed lengthwise between the abutting display fixtures or along the approximate longitudinal centerline of the display surface so as to separate the merchandise facing one of the aisles from the merchandise that abuts it facing the other aisle.

7.3.15.3.7 Freestanding display racks, pallets, tables, or bins containing packaged fireworks merchandise shall be permitted without flame breaks, provided the dimensions of the area occupied by the fireworks merchandise do not exceed 4 ft (1.2 m) in width, 8 ft (2.4 m) in length, and 6 ft (1.8 m) in height, and the displayed fireworks merchandise is separated from other displays of merchandise by aisles having a minimum clear width of 4 ft (1.2 m).

7.3.15.3.8 Where both of the facing vertical surfaces of the abutting display fixtures are constructed of perforated hardboard panels not less than ¼ in. (6 mm) thick that are separated from each other by an open space not less than 1½ in. (38 mm) wide, a flame break specified in 7.3.15.3.6 shall not be required.

7.3.15.4 Shelving.

7.3.15.4.1 Shelving or other surfaces used to support fireworks display merchandise shall be permitted to have not more than 10 percent of the area of the shelf contain holes or other openings.

7.3.15.4.2 The 10 percent limitation on the area of holes or other openings in the shelf used to support fireworks display merchandise shall not be applicable under the following conditions:

(1) Where both of the facing vertical surfaces of the abutting display fixtures are constructed of perforated hardboard panels not less than ¼ in. (6 mm) thick and separated from each other by an open space not less than 1½ in. (38 mm) wide
(2) Where such merchandise is suspended from or fastened to the shelf or surface or is displayed as packaged merchandise on the surface or in bins

7.3.15.4.3 Flame breaks and solid display surfaces shall not be required for packaged fireworks merchandise displayed in bins or display racks or on pallets or tables located at the end of a row of display fixtures where the following conditions are met:

(1) Such end displays are separated from the ends of the display fixtures by an open space not less than 3 in. (76 mm) wide.
(2) The fireworks merchandise occupies an area having dimensions not greater than the width of the end of the row of display fixtures and a depth not greater than 36 in. (910 mm).
(3) The minimum required widths of the adjacent aisles are maintained, but in no case is the aisle width less than 48 in. (1.2 m).

7.3.15.5 Covered Fuses.

7.3.15.5.1 Only consumer fireworks meeting the criteria for covered fuses as defined in 3.3.22 or as described in 7.3.15.5.2 shall be permitted where the retail sales of consumer fireworks are conducted.

7.3.15.5.2 A consumer fireworks device shall be considered as having a covered fuse if the fireworks device is contained within a packaged arrangement, container, or wrapper that is arranged and configured such that the fuse of the fireworks device cannot be touched directly by a person handling the fireworks without the person having to puncture or tear the packaging or wrapper, unseal or break open a package or container, or otherwise damage or destroy the packaging material, wrapping, or container within which the fireworks are contained.

7.3.15.6* Aerial Devices. Aerial devices shall be packaged and displayed for sale in a manner that will limit travel distance of ejected pyrotechnic components if ignition of the fireworks occurs.

7.3.15.7* Horizontal Barriers. Combustible materials and merchandise shall not be stored directly above the consumer fireworks in retail sales displays unless a horizontal barrier is installed directly above the consumer fireworks as prescribed in 7.4.2.2.5 of NFPA 430, *Code for the Storage of Liquid and Solid Oxidizers*.

7.3.16 Electrical Equipment. All electrical wiring shall be in accordance with NFPA 70, *National Electrical Code*.

7.3.17 Heating Equipment.

7.3.17.1 Heating units shall be listed and shall be used in accordance with their listing.

7.3.17.2 Temporary heating sources shall have tip-over and temperature-overheat protection.

7.3.17.3 Open-flame and exposed-element heating devices shall be prohibited.

7.3.18 Portable Generators.

7.3.18.1 Class II and Class III combustible liquid generator fuel shall be limited to not more than 5 gal (18.9 L).

7.3.18.2 Portable generators shall be permitted to use Class I flammable liquids as fuel, provided the quantity of such fuel is limited to 2 gal (7.6 L).

--`,,```,-`-`,,`,,`,`,,`---
Copyright National Fire Protection Association
Provided by IHS under license with NFPA
No reproduction or networking permitted without license from IHS
Not for Resale

7.3.19 Operations.

7.3.19.1 General. Means of egress, including but not limited to aisles, doors, and exit discharge, shall be clear at all times when the facility or the building is occupied.

7.3.19.2 Distances from Entrances and Exits.

7.3.19.2.1 No consumer fireworks shall be displayed for sale or stored within 5 ft (1.5 m) of any public entrance in an enclosed building or structure.

7.3.19.2.2 No consumer fireworks shall be displayed for sale or stored within 2 ft (0.6 m) of any exit or private entrance in an enclosed building or structure.

7.3.19.3 Security.

7.3.19.3.1 CFRS facilities and stores shall be secured when unoccupied and not open for business, unless fireworks are not kept in the facility during such times.

7.3.19.3.2 The fireworks displayed or stored in a CFRS facility or store shall be allowed to be removed and transferred to a temporary storage structure or location.

7.3.19.4 Fireworks shall not be ignited, discharged, or otherwise used within 300 ft (91.5 m) of a CFRS facility or store.

7.3.20 Display and Handling. Not less than 50 percent of the available floor area within the retail sales area shall be open space that is unoccupied by retail displays and used only for aisles and cross-aisles.

7.3.21* Housekeeping.

7.3.21.1 CFRS areas and storage rooms shall be kept free of accumulations of debris and rubbish.

7.3.21.2 Any loose pyrotechnic composition shall be removed immediately.

7.3.21.3 Vacuum cleaners or other mechanical cleaning devices shall not be used.

7.3.21.4 Brooms, brushes, and dustpans used to sweep up any loose powder or dust shall be made of nonsparking materials.

7.3.21.5 Consumer fireworks devices that are damaged shall be removed and not offered for sale.

7.3.21.6 Damaged consumer fireworks shall be permitted to be returned to the dealer or shall be disposed of according to the manufacturer's instructions.

7.3.22* Training. All personnel handling consumer fireworks shall receive safety training related to the performance of their duties.

7.3.23 Under the Influence. Any person selling consumer fireworks shall not knowingly sell consumer fireworks to any person who is obviously under the influence of alcohol or drugs.

7.3.24 Records.

7.3.24.1 Records shall be maintained on available inventory on the premise.

7.3.24.2 Records shall be made available to the AHJ upon request.

7.4 Consumer Fireworks Retail Sales (CFRS) Facility Requirements.

7.4.1 Plan. Where required, plans for CFRS facilities shall be submitted to the AHJ with the permit application.

7.4.2 Site Plan. The site plan for tents shall show the location of the tent on the site and indicate the minimum separation distances required by 7.4.7.

7.4.3 Construction Materials. The following construction materials requirements shall apply to new permanent CFRS facilities in jurisdictions that have not adopted a local building code:

(1) Buildings having an area up to and including 8000 ft^2 (743 m^2) shall be permitted to be constructed of any approved construction materials.
(2) Buildings having an area greater than 8000 ft^2 (743 m^2) shall be constructed in accordance with one of the following:
   (a) Buildings shall be constructed of noncombustible or limited-combustible materials.
   (b) Buildings with exterior walls having a fire resistance rating of not less than 2 hours shall be permitted to have the roof decking and its supporting structure and interior partitions constructed of combustible materials.
(3) Roof coverings for any building shall have a minimum rating of Class C as determined in accordance with NFPA 256, *Standard Methods of Fire Tests of Roof Coverings*.

7.4.4 Multiple-Tenant Buildings.

7.4.4.1 Where new CFRS facilities are located in a building containing other tenants, the CFRS facility shall be separated from the other tenants by fire barriers having no openings and a fire resistance rating of not less than 2 hours.

7.4.4.2 Where the new CFRS facility is protected per NFPA 13, *Standard for the Installation of Sprinkler Systems*, the fire resistance rating of the fire barrier required by 7.4.4.1 shall be permitted to be not less than 1 hour.

7.4.4.3 Any penetrations of the fire barrier shall be protected in accordance with NFPA *101*, *Life Safety Code*.

7.4.5 Fire Protection.

7.4.5.1 Automatic Sprinkler System Alarm. Any waterflow alarm device shall be arranged to activate audible and visual alarms throughout the CFRS facility in accordance with *NFPA 72, National Fire Alarm Code*.

7.4.5.2 Portable Fire Extinguishers. Portable fire extinguishers for temporary CFRS facilities shall be installed and located so that the maximum distance of travel required to reach an extinguisher from any point does not exceed 35 ft (10.6 m).

7.4.5.3 Public Notification. In permanent CFRS facilities greater than 3000 ft^2 (278.6 m^2) in area, a public address system or a means for manually activating audible and visible alarm indicating devices located throughout the facility in accordance with *NFPA 72, National Fire Alarm Code*, shall be provided at a constantly attended location when the CFRS facility is occupied.

7.4.6 Site Requirements.

7.4.6.1 Clearance to Combustibles. The area located within 30 ft (9 m) of a CFRS facility shall be kept free of accumulated dry grass, dry brush, and combustible debris.

7.4.6.2 Parking. No motor vehicle or trailer used for the storage of consumer fireworks shall be parked within 10 ft (3 m) of a CFRS facility, except when delivering, loading, or unloading fireworks or other merchandise and materials used, stored, or displayed for sale in the facility.

Copyright National Fire Protection Association
Provided by IHS under license with NFPA
No reproduction or networking permitted without license from IHS
Not for Resale

7.4.6.3 Fireworks Discharge. At least one sign that reads as follows, in letters at least 4 in. (102 mm) high on a contrasting background, shall be conspicuously posted on the exterior of each side of the CFRS facility:

NO FIREWORKS DISCHARGE
WITHIN 300 FEET

7.4.7 Separation Distances.

7.4.7.1 Permanent Facilities.

7.4.7.1.1 New Facilities. New permanent consumer fireworks retail sales facilities shall be separated from adjacent permanent buildings and structures in accordance with Table 7.4.7.1.1.

Table 7.4.7.1.1 Separation Distances Between New Permanent Buildings and Structures

Separation Distances		Exterior Wall Fire Resistance Rating (hr)	Exterior Wall Opening Protection Rating (hr)
ft	m		
< 10	< 3.05	2	1½
≥ 10–< 60	≥ 3.05–< 18.3	1	¾
≥ 60	≥ 18.3	0	0

7.4.7.1.2 Existing Facilities. Existing permanent CFRS facilities shall be separated from adjacent permanent buildings and structures by not less than 10 ft (3.05 m) or shall be separated by a wall with a 1-hour fire resistance rating.

7.4.7.2 Temporary Facilities. Temporary CFRS facilities shall be located as specified in Table 7.4.7.2.

7.4.8 Means of Egress.

7.4.8.1 General.

7.4.8.1.1 Means of egress in CFRS facilities shall comply with the applicable requirements of NFPA *101*, *Life Safety Code*, as modified by 7.3.14 and 7.4.8.

7.4.8.1.2* Means of egress in tents and membrane structures used for retail sales of consumer fireworks shall also comply with NFPA 102, *Standard for Grandstands, Folding and Telescopic Seating, Tents, and Membrane Structures*, as modified by 7.3.14 and 7.4.8.

7.4.8.2 The evacuation plan shall be posted in a conspicuous location that is accessible to the public as well as to persons employed or otherwise working in the CFRS facility.

7.4.8.3 Exit signs shall not be required to be illuminated in tents that are not open for business after dusk.

7.4.8.4 Emergency lighting shall not be required in tents that are not open for business after dusk.

7.4.8.5 Exit openings from tents shall have a clear opening width of not less than 44 in. (1100 mm).

7.4.9 Source of Ignition.

7.4.9.1 Temporary Electrical Equipment. Battery-powered equipment, electrical equipment, and electrical cords that are used in conjunction with a CFRS facility area shall be listed and shall be used in accordance with their listing.

7.4.9.1.1 Temporary wiring installed in a temporary structure, including tents and canopies, shall comply with Article 305 of NFPA 70, *National Electrical Code*.

7.4.9.1.2 Where temporary electrical conductors are placed on top of an outdoor surface to connect the permanent power source to the temporary CFRS facility's temporary electrical system, the conductors shall be provided with physical protection against damage caused by pedestrian or vehicular traffic.

7.4.9.2 Portable Generators.

7.4.9.2.1 Portable generators supplying power to CFRS facilities shall use only Class II or Class III combustible liquid fuels.

7.4.9.2.2 Portable generators shall be located not less than 20 ft (6.1 m) from the CFRS facility.

7.4.9.2.3 Generator fuels shall be stored not less than 20 ft (6.1 m) from the CFRS facility.

7.4.9.2.4* Where the generator fuel storage is located not less than 50 ft (15.2 m) from the CFRS facility, the quantity of such fuel shall not be limited by 7.3.17.

7.4.9.3 Cooking Equipment.

7.4.9.3.1 Cooking equipment of any type shall not be permitted within 20 ft (6.1 m) of tents, canopies, or membrane structures used for the storage or sale of consumer fireworks.

7.4.9.3.2 Open flame cooking equipment of any type shall not be allowed within 50 ft (15.2 m) of tents, canopies, or membrane structures used for the storage or sale of consumer fireworks.

Table 7.4.7.2 Temporary CFRS Facilities — Minimum Separation Distances

	Buildings		Combustibles[a]		Tents[b]		Vehicle Parking		Stands[c]		Storage of Consumer Fireworks	
	ft	m	ft	m	ft	m	ft	m	ft	m	ft	m
Tents[b]	20	6.1	20	6.1	20	6.1	10	3.05	20	6.1	20	6.1
Stands[c]	20	6.1	10	3.05	20	6.1	10	3.05	5[d]	1.5[d]	20	6.1

[a] The required clearances to combustibles shall also comply with 7.4.6.1.

[b] *Tents* refers to temporary retail sales of consumer fireworks in tents, canopies, and membrane structures.

[c] *Stands* refers to temporary CFRS stands.

[d] Where stands are separated from each other by less than 20 ft (6.1 m), the aggregate area of such stands shall not exceed 800 ft^2 (74 m^2).

Copyright National Fire Protection Association
Provided by IHS under license with NFPA
No reproduction or networking permitted without license from IHS
Not for Resale

7.4.10 Quantity Limitations. The floor area occupied by the retail displays of consumer fireworks in permanent CFRS facilities shall not exceed 40 percent of the available floor area within the retail sales area.

7.4.11 Flame Breaks. In CFRS facilities the longitudinal flame break required in 7.3.15.3.6 shall not be required where the display fixture or surface is adjacent to an aisle that is not used for public egress.

7.5 Stores.

7.5.1 General.

7.5.1.1* For the purpose of this chapter, stores in which retail sales of consumer fireworks are conducted shall not be considered CFRS facilities as defined in 3.3.29.1 where both of the following conditions exist:

(1) The area of the retail sales floor occupied by the retail displays of consumer fireworks does not exceed 25 percent of the area of the retail sales floor in the building or 600 ft^2 (55.5 m^2), whichever is less.
(2) The consumer fireworks are displayed and sold in a manner approved by the AHJ and comply with the applicable provisions of this code, federal and state law, and local ordinances.

7.5.1.2 Consumer fireworks displayed for sale in stores shall comply with the following:

(1) Such fireworks shall be under the visual supervision of a store employee or other responsible party while the store is open to the public.
(2) Such fireworks shall be packaged fireworks merchandise.
(3)*Such fireworks shall be packaged and displayed for sale in a manner that will limit travel distance of ejected pyrotechnical components if ignition of the fireworks occurs.
(4) Where consumer fireworks meeting the descriptions of C.3.1.2 or C.3.1.3 for aerial devices and audible ground devices, respectively, are sold, such devices shall be displayed for sale in an area of the store that is physically separated from the rest of the store in a manner that restricts entry by the public, and the area of the store shall be provided with not less than two means of egress, so located that there is no common path of travel and the distance to reach an egress point from the area does not exceed 35 ft (10.7 m).

7.5.2 Egress. Means of egress in stores shall comply with NFPA *101*, *Life Safety Code*, unless otherwise specified in 7.3.14.

7.5.3 Storage Rooms. Storage rooms containing consumer fireworks in a new permanent store shall be protected with an automatic sprinkler system installed in accordance with NFPA 13, *Standard for the Installation of Sprinkler Systems*, or separated from the retail sales area by a fire barrier having a fire resistance rating of not less than 1 hour.

7.5.3.1 Door and window openings in the fire barrier wall shall be protected by self-closing fire doors or fixed fire windows having a fire protection rating of not less than 1 hour and shall be installed in accordance with NFPA 80, *Standard for Fire Doors and Fire Windows*.

7.5.3.2 Any other openings or penetrations in the fire barrier wall shall be protected in accordance with NFPA *101*, *Life Safety Code*.

7.5.4 Alarm Notification. In Class B stores, a public address system or a means for manually activating audible and visible alarm indicating devices located throughout the facility in accordance with *NFPA 72*, *National Fire Alarm Code*, shall be provided at a constantly attended location when the store is occupied.

7.5.5 Flame breaks shall be allowed to be omitted in stores protected throughout with an automatic sprinkler system installed in accordance with NFPA 13, *Standard for the Installation of Sprinkler Systems*.

7.6 Stands.

7.6.1 Site Plan. The site plan for stands shall show the location of the stand on the site and indicate the minimum separation distances required by 7.4.7.

7.6.2 Temporary Stands.

7.6.2.1 Portable Fire Extinguisher. Temporary CFRS stands of less than 200 ft^2 (18.6 m^2) shall be required to have only one portable fire extinguisher.

7.6.2.2 Fire Safety and Evacuation Plan. An approved fire safety and evacuation plan shall not be required for temporary CFRS stands.

7.6.2.3 Means of Egress.

7.6.2.3.1 Retail sales areas within temporary CFRS stands shall have a minimum of two exits.

7.6.2.3.2 Exits provided for temporary fireworks retail sales stands shall be located such that the maximum egress travel distance as measured from the most remote point to an exit along the natural and unobstructed path of egress travel does not exceed 35 ft (10.6 m).

7.6.2.3.3 Customers shall not be permitted inside a temporary CFRS stand unless it complies with the means of egress requirements in 7.3.14.

7.6.2.3.4 Exit signs shall not be required to be illuminated in stands that are not open for business after dusk, or in temporary CFRS stands where the interior is not accessible to the public.

7.6.2.3.5 Emergency lighting shall not be required in stands that are not open for business after dusk or for temporary CFRS stands where the interior is not accessible to the public.

7.6.3 Minimum Separation Distances. Temporary CFRS stands shall be separated from adjacent buildings and structures in accordance with Table 7.4.7.2.

7.6.4 Stands Not Open to the Public.

7.6.4.1 Minimum Clear Width of Aisles. In temporary CFRS stands where the interior is not accessible to the public, the minimum clear width of the aisle shall be permitted to be not less than 28 in. (710 mm).

7.6.4.2 Egress Doors.

7.6.4.2.1 Egress doors provided for temporary CFRS stands where the interior is not accessible to the public shall be permitted to be not less than 28 in. (710 mm) in width.

7.6.4.2.2 For temporary CFRS stands where the interior is not accessible to the public, latching devices on doors shall be permitted without panic hardware.

7.6.4.3 Storage. In temporary CFRS stands where the interior is not accessible to the public, the maximum height of sales displays shall be limited to 8 ft (2.44 m).

Copyright National Fire Protection Association
Provided by IHS under license with NFPA
No reproduction or networking permitted without license from IHS
Not for Resale

7.6.4.4 Flame Breaks. Temporary CFRS stands where the interior is not accessible to the public shall not be required to comply with 7.3.15.3.

7.6.4.5 Covered Fuses. Individual consumer fireworks items displayed for sale in temporary CFRS stands where the interior is not accessible to the public shall not be required to have covered fuses.

7.6.4.6 Sales Display. The following shall apply to the sales display of consumer fireworks in temporary CFRS stands that do not allow access to the interior of the stand by the public:

(1) Consumer fireworks shall be displayed in a manner that prevents the fireworks from being handled by persons other than those operating, supervising, or working in the temporary CFRS stand.
(2) The handling requirements of 7.6.4.6(1) shall not apply to packaged assortments, boxes, or similarly packaged containers of one or more items, regardless of type.

Chapter 8 Transportation on Public Highways of Fireworks, Pyrotechnic Articles, and Any Component(s) Containing Pyrotechnic or Explosive Materials

8.1 General Requirements. Transportation on public highways of fireworks, pyrotechnic articles, and any component(s) containing pyrotechnic or explosive materials shall meet all applicable requirements of the U.S. Department of Transportation (U.S. DOT), 49 CFR 170 to end, and any applicable local, state, or international requirements.

Annex A Explanatory Material

Annex A is not a part of the requirements of this NFPA document but is included for informational purposes only. This annex contains explanatory material, numbered to correspond with the applicable text paragraphs.

A.1.3.11 Novelties are not classified as fireworks. See Annex C.

A.3.2.1 Approved. The National Fire Protection Association does not approve, inspect, or certify any installations, procedures, equipment, or materials; nor does it approve or evaluate testing laboratories. In determining the acceptability of installations, procedures, equipment, or materials, the authority having jurisdiction may base acceptance on compliance with NFPA or other appropriate standards. In the absence of such standards, said authority may require evidence of proper installation, procedure, or use. The authority having jurisdiction may also refer to the listings or labeling practices of an organization that is concerned with product evaluations and is thus in a position to determine compliance with appropriate standards for the current production of listed items.

A.3.2.2 Authority Having Jurisdiction (AHJ). The phrase "authority having jurisdiction," or its acronym AHJ, is used in NFPA documents in a broad manner, since jurisdictions and approval agencies vary, as do their responsibilities. Where public safety is primary, the authority having jurisdiction may be a federal, state, local, or other regional department or individual such as a fire chief; fire marshal; chief of a fire prevention bureau, labor department, or health department; building official; electrical inspector; or others having statutory authority. For insurance purposes, an insurance inspection department, rating bureau, or other insurance company representative may be the authority having jurisdiction. In many circumstances, the property owner or his or her designated agent assumes the role of the authority having jurisdiction; at government installations, the commanding officer or departmental official may be the authority having jurisdiction.

A.3.2.3 Code. The decision to designate a standard as a "code" is based on such factors as the size and scope of the document, its intended use and form of adoption, and whether it contains substantial enforcement and administrative provisions.

A.3.2.5 Listed. The means for identifying listed equipment may vary for each organization concerned with product evaluation; some organizations do not recognize equipment as listed unless it is also labeled. The authority having jurisdiction should utilize the system employed by the listing organization to identify a listed product.

A.3.3.1 Aerial Shell. Comets and mines are not aerial shells. The shells are most commonly 3 in. to 6 in. (76 mm to 152 mm) outside diameter and are fired from mortars. Upon firing of the shell, the fuse and lift charge are consumed. [**1123**, 2006]

A.3.3.5.3 Screen Barricade. Such barricades can be constructed of metal roofing, ¼ in. to ½ in. (6 mm to 13 mm) mesh screen, or equivalent material.

A.3.3.7 Binary System. The ingredients for such a system are shipped separately as an oxidizer and a fuel. The ingredients do not become a pyrotechnic material until they are mixed.

A.3.3.9.1 Consumer Fireworks Storage Building. Consumer fireworks storage buildings are typically found at manufacturing or distribution facilities and are not considered to be process buildings, rooms, or areas.

A.3.3.9.2 Consumer Fireworks Work Building, Room, or Area. Work buildings, rooms, or areas are typically found at manufacturing or distribution facilities and are considered nonprocess buildings, rooms, or areas.

A.3.3.9.3 Inhabited Building. The term includes any church, school, store, railway passenger station, airport passenger terminal, and any other building or structure where people are accustomed to congregate or assemble. This term does not include any building or structure occupied in connection with the manufacture, transportation, storage, distribution, packing, packaging, shipping, or use of explosive materials or fireworks at a manufacturing or distribution facility.

A.3.3.9.4 Mechanical Building. A mechanical building is intended to be an unoccupied building.

A.3.3.9.5 Mixing Building. This definition does not apply to wet sparkler mix preparation.

A.3.3.9.6 Nonprocess Building. A pyrotechnic laboratory is considered to be a nonprocess building, but it is subject to the required separation distances for a consumer fireworks process building.

A.3.3.9.7 Process Building. Examples of operations performed in a process building include, but are not limited to, the following:

(1) Assembling internal component parts or exposed pyrotechnic compositions into finished fireworks
(2) Mixing pyrotechnic or explosive compositions

--`,,```,-`-`,,`,,`,`,,`---

Copyright National Fire Protection Association
Provided by IHS under license with NFPA
No reproduction or networking permitted without license from IHS
Not for Resale

(3) Pressing pyrotechnic or explosive compositions
(4) Drying of newly manufactured fireworks or pyrotechnic articles or their compositions
(5) Packing of finished fireworks or pyrotechnic articles
(6) Any combination of these operations

A.3.3.9.10 Unoccupied Building. An unoccupied building can be used for long-term storage of materials acceptable to the AHJ, provided that no fireworks or pyrotechnic composition is stored within the building.

A.3.3.13 Comet. A comet is not a shell or mine. Comets frequently leave a trail of sparks as they rise in the air, and they sometimes burst into smaller fragments at their zenith. [**1123**, 2006]

A.3.3.19 Consumer Fireworks Retail Sales (CFRS) Stand. Stands can include, but are not limited to, small buildings, plywood or sheet metal structures, manufactured buildings, semitrailers, trailers, shipping containers, or similar structures or facilities.

A.3.3.22 Covered Fuse. The purpose of the covered fuse is to minimize the accidental ignition of fireworks in a retail display by a lighted cigarette or a match, a cigarette lighter, or similar small open flame, as well as to reduce the potential for the rapid involvement of fireworks in, and the subsequent acceleration of, a fire originating within a retail display of consumer fireworks.

Protection of the fuse can be provided by means of tape covering the exposed (ignitable) end of a safety fuse or by covering the fuse or the entire fireworks device or group of fireworks devices with paper, plastic, cardboard, paperboard, or similar or equivalent materials.

Examples of covered fuses of fireworks devices include those contained within packaged assortments, multi-item packages, and similar retail merchandise arrangements that are displayed within unopened and unperforated containers so that they are not exposed to view, or they are covered with, or are contained within, plastic wrap, paper, paperboard, cardboard, or other types of wrapping or packaging materials designed to prevent the fuses from coming into direct contact with an ignition source.

A.3.3.25 DOT-Approved Packaging. DOT-approved packaging for consumer fireworks typically consists of sealed fiberboard cartons that have been tested and certified to meet the performance requirements specified in Part 178 of 49 CFR. Cartons are required to be marked and labeled in compliance with DOT regulations to indicate that fireworks are contained in the packagings.

A.3.3.27 Explosive. This term includes but is not limited to dynamite, Black Powder, pellet powder, initiating explosives, detonators, safety fuses, squibs, detonating cord, igniter cord, and igniters. The term *explosive* includes any materials determined to be within the scope of 18 USC Chapter 40, "Importation, Manufacture, Distribution, and Storage of Explosive Materials," and also includes any materials classified as an explosive by the Hazardous Materials Regulations of the U.S. Department of Transportation (U.S. DOT). See Annex E.

A.3.3.29.3 Manufacturing Facility. The following operations are not considered to be manufacturing where performed in a separate building or area:

(1) Assembly of display pieces from finished pyrotechnic articles classified as Explosive 1.4
(2) Minor repairs or modification of consumer fireworks not involving exposed pyrotechnic material
(3) Packing of finished consumer fireworks into consumer fireworks assortments
(4) Attachment of electric matches and minor repairs to display fireworks and pyrotechnic articles

A.3.3.30 Fireworks. Toy caps for use in toy pistols, toy canes, toy guns, and novelties and trick noisemakers are not considered to be fireworks *(see Annex C)*. The regulations referred to limit the explosive content of each toy cap to not more than an average of 0.25 gr (16.2 mg). Also, each package containing such caps has to be labeled to indicate the maximum explosive content per cap. For information on the use of model rockets and model rocket motors, see NFPA 1122, *Code for Model Rocketry*. For information on the use of high power rockets and high power rocket motors, see NFPA 1127, *Code for High Power Rocketry*. Model rockets, model rocket motors, high power rockets, and high power rocket motors designed, sold, and used for the purpose of propelling recoverable aero models are not considered to be fireworks.

A.3.3.30.1 Consumer Fireworks. Consumer fireworks are normally classified as Explosives, 1.4G and described as Fireworks, UN 0336 by the U.S. Department of Transportation (U.S. DOT) *(see Annex C)*. Some small devices designed to produce audible effects are included, such as whistling devices, ground devices containing 0.8 gr (50 mg) or less of explosive composition (salute powder), and aerial devices containing 2 gr (130 mg) or less of explosive composition (salute powder) per explosive unit. Consumer fireworks that comply with the construction, chemical composition, and labeling regulations of the U.S. DOT for fireworks, 49 CFR 172, and the U.S. Consumer Product Safety Commission (CPSC) as set forth in CPSC 16 CFR 1500 and 1507, are not considered to be explosive materials for purposes of this code.

A.3.3.30.2 Display Fireworks. Display fireworks are described as Fireworks, UN0335 and are classified as Explosives, 1.3G by the U.S. Department of Transportation (U.S. DOT) *(see Annex C)*.

Display fireworks include, but are not limited to, the following:

(1) Salutes or firecrackers containing more than 2 gr (130 mg) of explosive composition (salute powder)
(2) Aerial shells containing more than 2.1 oz (60 g) of total pyrotechnic and explosive composition
(3) Other display pieces that exceed the limits for classification as consumer fireworks

Such fireworks are also described as fireworks, 49 CFR 172 by the U.S. DOT.

A.3.3.37 Manufacturing. The following operations are not considered to be manufacturing where performed in a separate building or area:

(1) Assembly of display pieces from finished pyrotechnic articles classified as Explosive 1.4
(2) Minor repairs or modification of consumer fireworks not involving exposed pyrotechnic material
(3) Packing of finished consumer fireworks into consumer fireworks assortments
(4) Attachment of electric matches and minor repairs to display fireworks and pyrotechnic articles

A.3.3.39.2 Bullet-Sensitive Explosive Material. The test material is at a temperature of 70°F to 75°F (21°C to 24°C) and is placed against a ½ in. (12.7 mm) steel plate.

Copyright National Fire Protection Association
Provided by IHS under license with NFPA
No reproduction or networking permitted without license from IHS
Not for Resale

A.3.3.39.5 Pyrotechnic Material (Pyrotechnic Special Effects Material). Such a chemical mixture consists predominantly of solids capable of producing a controlled, self-sustaining, self-contained exothermic chemical reaction that results in heat, gas, sound, or light, or a combination of these effects. The chemical reaction functions without external oxygen.

A.3.3.41 Mercantile Occupancy. Mercantile occupancies include the following:

(1) Auction rooms
(2) Department stores
(3) Drugstores
(4) Restaurants with fewer than 50 persons
(5) Shopping centers
(6) Supermarkets

Office, storage, and service facilities incidental to the sale of merchandise and located in the same building should be considered part of the mercantile occupancy classification. [***5000***, 2006]

A.3.3.42 Mine. A mine is not an aerial shell or a comet. [**1123**, 2006]

A.3.3.48 Novelties. For further information, see Annex C.

A.3.3.49 Oxidizer. Where such a chemical decomposes, it releases oxygen. In addition to ionic solids, an oxidizer can be a material having covalent molecules containing halogen atoms. An oxidizer is an ingredient of pyrotechnic materials.

A.3.3.50 Packaged Fireworks Merchandise. Packaged fireworks merchandise is generally fireworks items or groups of fireworks items that have been packaged by the manufacturer or distributor before they are offered for sale to the consumer. The packaging arrangement completely encapsulates the fireworks item or items within paperboard, cardboard, plastic wrap, or similar materials or combinations of materials. Such encapsulation ensures that a person must puncture, tear, unseal, or break open the package or otherwise damage or destroy the packaging materials in order to gain access to, and directly handle, each individual fireworks item to expose its fuse.

A.3.3.60 Pyrotechnic Laboratory. A pyrotechnic laboratory typically processes small batches of chemicals and compositions, manufactures prototypes, or conducts a variety of tests and analyses. See 3.3.9.7, *Process Building*, and 4.6.9.

A.3.3.72 Stars. Stars burn while in the air, producing color or streamer effects.

A.3.3.74 Store. Stores are subclassified as Class A, Class B, or Class C in accordance with NFPA *101*, *Life Safety Code*. For informational purposes, 36.1.4.2, *Subclassification of Occupancy*, is reprinted from NFPA *101* in Figure A.3.3.74.

A.4.5.2 For information on the use of conductive surfaces to minimize the hazard of static electricity, see 20.3.6 of NFPA 99, *Standard for Health Care Facilities*.

A.4.5.5.1 In general, the wall having the largest area should be chosen to provide explosion relief. The entire area of the wall should be utilized. The term *weakwall* is used to describe the relative strength of the explosion-relieving wall as compared to the rest of the building.

A.4.6.3.1 The use of barricades is highly recommended.

A.4.7 The maximum quantity of salute powder that is permitted in any process building or area is 10 lb (4.5 kg).

36.1.4.2 Subclassification of Occupancy.

36.1.4.2.1 Mercantile occupancies shall be subclassified as follows:

(1) Class A, all mercantile occupancies having an aggregate gross area of more than 30,000 ft^2 (2800 m^2) or occupying more than three stories for sales purposes
(2) Class B, all mercantile occupancies of more than 3000 ft^2 (280 m^2), but not more than 30,000 ft^2 (2800 m^2), aggregate gross area and occupying not more than three stories for sales purposes
(3) Class C, all mercantile occupancies of not more than 3000 ft^2 (280 m^2) gross area and used for sales purposes occupying one story only

36.1.4.2.2 For the purpose of the classification required in 36.1.4.2.1, the requirements of 36.1.4.2.2.1, 36.1.4.2.2.2, and 36.1.4.2.2.3 shall be met.

36.1.4.2.2.1 The aggregate gross area shall be the total gross area of all floors used for mercantile purposes.

36.1.4.2.2.2 Where a mercantile occupancy is divided into sections, regardless of fire separation, the aggregate gross area shall include the area of all sections used for sales purposes.

36.1.4.2.2.3 Areas of floors not used for sales purposes, such as an area used only for storage and not open to the public, shall not be counted for the purposes of the classifications in 36.1.4.2.1(1), (2), and (3), but means of egress shall be provided for such nonsales areas in accordance with their occupancy, as specified by other chapters of this *Code*.

FIGURE A.3.3.74 Subclassification of Occupancy. [*101*:36.1.4.2]

A.4.8.2 Where sufficient separation distances exist, the Regional Director of the Bureau of Alcohol, Tobacco and Firearms can grant a variance from this requirement upon written request.

A.4.9.2.3 Smoking materials include matches, lighters, cigarettes, cigars, and pipes.

A.4.9.5 Care should be exercised because some oxidizers are mutually incompatible. The NFPA *Fire Protection Guide to Hazardous Materials*, which contains the former NFPA 491, *Guide to Hazardous Chemical Reactions*, lists many oxidizers and other materials that result in hazardous interactions. Oxidizers commonly include nitrates, chlorates, and perchlorates.

A.4.9.6 Where practicable, nonsparking machinery and tooling should be used. To the extent practical, ferrous metals should be covered with nonsparking coatings such as epoxy paint.

A.4.11 For information on fireworks classification testing, contact the following agencies:

(1) U.S. Bureau of Mines, Columbia Plaza, 2401 E Street, NW, Washington, DC 20241.
(2) Bureau of Explosives, c/o Association of American Railroads, 50 F Street, NW, Washington, DC 20001.

A.4.12.1 This requirement minimizes personnel exposure and is distinct from any requirement on maximum building occupancy that might exist in local ordinances. One method for assessing the number of people necessary to conduct production operations is to perform a process hazard analysis as required by OSHA's *Process Safety Management Standard*, Title 29 CFR 1910.119.

Copyright National Fire Protection Association
Provided by IHS under license with NFPA
No reproduction or networking permitted without license from IHS
Not for Resale

A.4.14.5.2 Markings should be on the device, unless it is too small to do so conspicuously. If too small, a tag or label on the package with the information should be marked conspicuously.

Aerial shells, comets, or mines should be marked with the size according to A.4.14.5.2(3). Roman candles and multiple tube devices should be described by the inside diameter of their tubes.

The warnings should be in bold letters that are easily discernable from the rest of the markings.

A.4.14.5.2(3) As a minimum, each shell should bear a label containing the following information:

(1) Description of the size of the shell [e.g., 3 in. (76 mm) shell]
(2) Description of the type of shell (e.g., 2-break with report)
(3) Warning statement that reads as shown in Figure A.4.14.5.2(3)(a).
(4) Name and location of the business of the manufacturer, importer, or distributor, with conspicuous labeling as follows:
   (a) The statement should be printed in capital letters at least ⅛ in. (3 mm) high and be underlined as shown in Figure A.4.14.5.2(3)(b).
   (b) The remaining printed matter does not need to be printed in capital letters, but the letters should be at least ⅛ in. (3 mm) high.
   (c) The required statements should be printed in a color that contrasts sharply with the background and should be printed within a borderline.
   (d) The label should be at least 9 in.^{2} (58 cm^2), unless the size of the shell is too small to accommodate a label of such size, in which case the label should be reduced to a size no smaller than necessary.

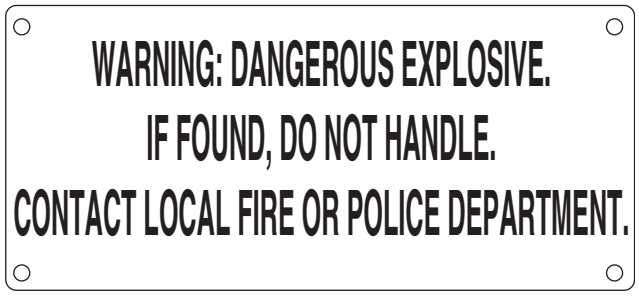

FIGURE A.4.14.5.2(3)(a) Warning Statement on Shell.



FIGURE A.4.14.5.2(3)(b) Warning Statement Following Manufacturer, Importer, or Distributor Data.

A.5.3.1(3) A bullet-resistant roof should be constructed according to any of the specifications in Annex B. A bullet-resistant ceiling should be constructed at the eave line, covering the entire area of the magazine, except for the necessary ventilation space. Examples of bullet-resistant ceiling construction include the following:

(1) Any construction meeting the specifications in Annex B
(2) A sand tray having a sand depth of at least 4 in. (101.6 mm)

A.5.4.2 Corresponding grades and brands of explosive materials should be stored together so that brand and grade markings are readily visible. All stock should be stored so it can be easily counted and checked.

A.5.4.3 Where explosive materials are removed from the magazine for use, the oldest stock should be used first.

A.5.4.5 Open containers of explosive materials should be closed securely before they are returned to a magazine. No container without a closed lid should be stored in a magazine.

A.5.6.3 Net weight equals the net weight of all pyrotechnic and explosive compositions and fuse only. For display fireworks, approximately 50 percent of the gross weight of the fireworks equals the net weight of composition and fuse.

A.5.7.9 Tools, equipment, supplies, and documents can include, but not be limited to, empty cartons, packing materials, labels, marking pens, tape and other shipping and receiving supplies, scales, carts, pallet jacks, pallets, crates, conveyors and stands, box cutters or knives, dispensers, brooms, dustpans, bills of lading, shipping papers and documents, packing slips, orders, invoices, and inventory records.

A.6.1.1 Requirements for consumer fireworks stored in conjunction with the retail sales of consumer fireworks at a CFRS facility or store should be in accordance with Chapter 7, Retail Sales of Consumer Fireworks.

A.6.1.6 Devices that are lacking labeling, ornamentation, or bases are considered to be finished for the purposes of Chapter 6.

A.6.2.7 The American Fireworks Safety Laboratory (AFSL) is an independent third-party testing agency recognized by the Consumer Product Safety Commission (CPSC) as an acceptable testing agency for consumer fireworks.

A.6.5.1 Where consumer fireworks storage buildings are subdivided with fire walls meeting the requirements of *NFPA 5000, Building Construction and Safety Code*, so that no area exceeds 12,000 ft^2 (1114 m^2), an automatic sprinkler system is not required because each area is considered a separate building.

A.6.6 An approved fire apparatus access is generally considered to be a paved road or other suitable all-weather surface, such as gravel or compacted earth, that can accommodate a typical fire department vehicle such as a pumper. Such access is not required to be a public street or alley, but it is to be laid out and designed so that it can be readily used by the responding fire department under all weather conditions without unduly impeding the fire department's access to the building or facility.

A.6.7.1 In jurisdictions where a local building code is adopted and enforced, separation distances are usually measured to property lines, except where there are two or more buildings located on the same property. In that case, an imaginary or assumed property line is generally assumed to be located somewhere between the buildings for the purpose of determining the required separation distance between the

--`,,```,,,-`-`,,`,,`,`,,`---
Copyright National Fire Protection Association
Provided by IHS under license with NFPA
No reproduction or networking permitted without license from IHS
Not for Resale

buildings. Otherwise, the buildings can be treated as one building for the purpose of applying building code requirements or the requirements in Chapter 6. However, it is the intent of this section to specify the minimum separation distance necessary to minimize the propagation of fire by transmission of ejected burning materials. This distance is required between buildings, not between buildings and property lines whether real, imagined, or assumed.

A.6.10 Extension cords should be approved and listed, minimum 14 gauge.

A.6.11.4 Where pile heights exceed 12 ft (3.7 m), aisle widths should be increased proportionally so as to maintain the 4:1 ratio between pile height and aisle width.

A.6.11.7 The operator of each consumer fireworks storage or work building or area should train employees at least once a year using the written emergency response plan.

A.7.1 The content of Chapter 7 has been extensively reorganized in this edition in order to provide all the requirements for a specific facility or store type to appear in one section of the chapter. To facilitate use of this chapter for those familiar with the 2003 code, a guide to this reorganization has been provided in Annex H.

A.7.1.1 To assist the user of this code in determining whether a CFRS facility or store is new or existing for the purpose of applying this code, Table A.7.1.1 has been provided.

A.7.2.2 This requirement is not intended to preclude the retail sales of consumer fireworks in occupancies that might be classified as Group H High Hazard (Hazardous) by a building code.

A.7.3.2 Specific information and requirements for permits can be found in Section 1.12, NFPA 1, *Uniform Fire Code*, for those jurisdictions that have not adopted a building code or fire code.

A.7.3.4 See A.6.6.

A.7.3.13 Fire safety and evacuation plans should be prepared by the owner or operator of the consumer fireworks retail sales facility or store in consultation with the AHJ.

A.7.3.14.3.2 The purpose of 7.3.14.3.2 is to ensure that a readily available path of travel is provided to reach the required exits and that such travel can occur under emergency conditions without significant impedance by the aisle arrangement. In fact, cross-aisles are required to facilitate access to alternate aisles and paths of travel in case an aisle or a path of travel is blocked by an incident. An example of how the requirements of 7.3.14.3.2 would be implemented for the design of an exit access aisle system in a CFRS facility is shown in Figure A.7.3.14.3.2.

A.7.3.15 Consumer fireworks sealed in packaging meeting U.S. DOT standards for shipping would not be considered to be on display.

A.7.3.15.2 The ability to view the entire retail sales area is important for several reasons. For employees, such visibility allows easier supervision of the customers and helps to minimize the possibility of malicious mischief, such as the willful setting of fires in the fireworks merchandise displays. It also allows employees to quickly observe and respond to an incipient fire condition. Response might include the following:

(1) Evacuation of the occupants
(2) Notification of the local fire department
(3) Initiation of a fire attack using the fire extinguishers in the facility, provided that the fire is still small enough

Table A.7.1.1 Applicability of Chapter 7 to New and Existing CFRS Facilities and Stores

Venue Type	Application
Temporary stand – seasonal	New
Temporary tent – seasonal	New
Temporary facility – seasonal	New
Temporary stores (including bulk retail) – seasonal	New
Permanent stand*	
– Year round	Existing
– Seasonal	Existing
Permanent stand†	
– Year round	New
– Seasonal	New
Permanent tent*	
– Year round	Existing
– Seasonal	Existing
Permanent tent†	
– Year round	New
– Seasonal	New
Permanent CFRS facility*	
– Year round	Existing
– Seasonal	Existing
Permanent CFRS facility†	
– Year round	New
– Seasonal	New
Permanent store*	
– Year round	Existing
– Seasonal	Existing
Permanent store†	
– Year round	New
– Seasonal	New

Note: Change in display or exit layout can require new permit based on local requirements.
* Sales conducted within 1 year prior to the effective date.
† Sales not conducted within 1 year prior to the effective date.
CFRS facility – consumer fireworks retail sales facility

For the customers, such visibility allows them also to quickly see a developing fire condition and react accordingly. Exits and their corresponding paths of travel are more easily observed, thus minimizing panic and facilitating evacuation in a timely manner. Full visibility can be easily achieved by keeping the height of displays and displayed merchandise within the retail sales area below adult eye level. Where displays located around the perimeter of the retail sales area do not impact the ability to view the area, it is not necessary to limit their height. However, if it is desirable to have higher displays of merchandise within the retail sales area, equivalent means of achieving full visibility should be employed, such as the use of unobstructed surveillance mirrors strategically located throughout the sales area or the addition of more employees who can walk the sales floor and monitor the customers.

Copyright National Fire Protection Association
Provided by IHS under license with NFPA
No reproduction or networking permitted without license from IHS
Not for Resale

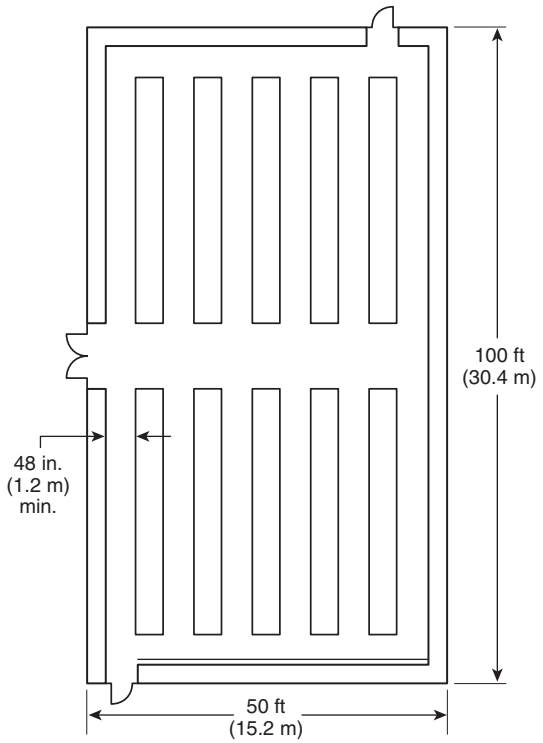

FIGURE A.7.3.14.3.2 Typical Design for Exit Access Aisle System in CFRS Facility.

A.7.3.15.3 Flame breaks can be constructed of any of the following:

(1) Sheet steel
(2) Sheet aluminum not less than 0.010 in. (0.25 mm) thick
(3) Hardboard not less than ⅛ in. (3 mm) thick
(4) Gypsum board not less than ⅜ in. (10 mm) thick
(5) Wood panels not less than ⅛ in. (3 mm) thick
(6) Plywood not less than ¼ in. (6 mm) thick
(7) Particleboard not less than ¼ in. (6 mm) thick
(8) Cement fiberboard
(9) Plastic laminate not less than ⅛ in. (3 mm) thick
(10) Safety glass not less than ⅛ in. (3 mm) thick
(11) Other approved material

Where installed within a retail display fixture containing consumer fireworks, the flame break should impede or retard the rapid spread of an incipient fire involving the fireworks and their packaging materials as any of the following occurs:

(1) The fire progresses along a display level or shelf.
(2) The fire attacks another display level or shelf above.
(3) The fire attacks another display fixture abutting the display fixture of origin.

As a result of installing flame breaks to impede fire spread, the quantity and rate of smoke production can be retarded as well. Thus, flame breaks can provide the building occupants with additional time to react to an incipient fire and safely evacuate the building. See Figure A.7.3.15.3.

A.7.3.15.3.3 The purpose of specifying packaged fireworks merchandise is to permit such merchandise to be used in longer lengths of displays of consumer fireworks without the installation of a flame break. It is presumed that packaged fireworks merchandise does not readily ignite when exposed to a fire developing within the retail display area merchandise and does not readily contribute to or accelerate a fire that might spread along the surface of a display. See Figure A.7.3.15.3.3. Since the purpose of a flame break is to slow down the rapid spread of a fire involving a retail display of consumer fireworks to allow occupants time to react and evacuate the immediate area, properly packaged fireworks merchandise can also serve the purpose of a flame break. For a description of packaged fireworks merchandise, see A.3.3.22, Covered Fuse.

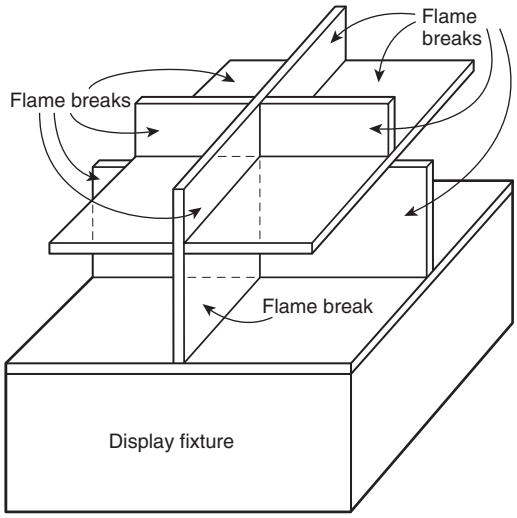

FIGURE A.7.3.15.3 Flame Break Design.

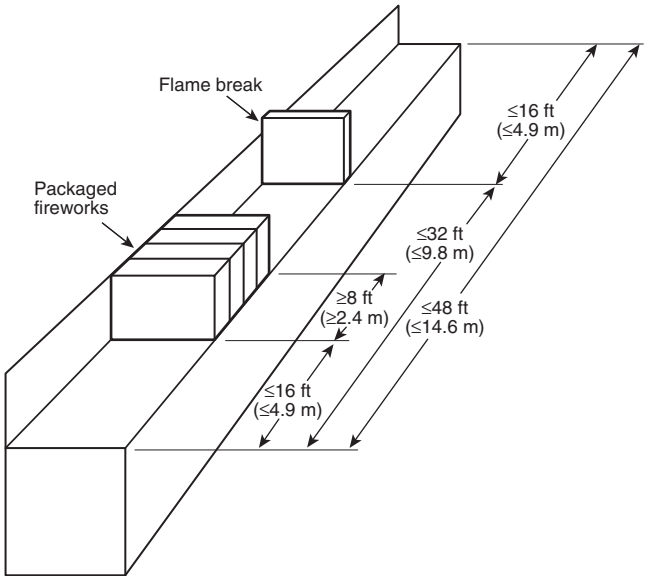

FIGURE A.7.3.15.3.3 Packaged Fireworks Merchandise and Flame Break Requirements.

--`,,```,-`-`,,`,,`,`,,`---
Copyright National Fire Protection Association
Provided by IHS under license with NFPA
No reproduction or networking permitted without license from IHS
Not for Resale

A.7.3.15.6 This section describes performance criteria for how aerial devices, which are described in C.3.1.2, are to be packaged, displayed, and restrained as needed, depending upon the device and the manner in which it is packaged and displayed. Thus, upon ignition by a fire in the retail sales display area containing devices, the resultant effect of the ejection of pyrotechnic components will be reasonably limited so as not to pose an undue threat to evacuating occupants or to cause rapid spread of the fire to areas remote from the immediate area of the fire.

The method and manner of packaging and displaying aerial devices have been demonstrated to be effective in accomplishing the intent of this section. This performance criterion could also be met by enclosing consumer fireworks within bins. The packaging material itself can be designed to contain the consumer fireworks. The placement and arrangement of the aerial devices within the packages or within bins or on shelves are also important factors. Other containment methods include fastening aerial devices together, restraining their movement with packaging materials, or placing aerial devices or packages of aerial devices within racks, containers, holders, or other structures.

A.7.3.15.7 Arrangement of horizontal plywood barriers should be as shown in Figure A.7.3.15.7.

A.7.3.21 Refer to Material Safety Data Sheet (MSDS) for additional information.

A.7.3.22 Training might be required by the U.S. Department of Transportation or the Occupational Safety and Health Administration as applicable for the purpose of being employed in the operation of a CFRS or storage facility.

A.7.4.8.1.2 NFPA 102, *Standard for Grandstands, Folding and Telescopic Seating, Tents, and Membrane Structures*, has been referenced for the purpose of determining the requirements for the means of egress in tents and membrane structures except as modified by 7.3.14 of this code for special requirements for the retail sales of consumer fireworks. It should be noted that although 9-2.5 of NFPA 102 prohibits fireworks in any tent or temporary membrane structure, the intent is to prohibit the use, discharge, or ignition of fireworks within the tent or temporary membrane structure because unauthorized open flames are also prohibited in the same section. Consumer fireworks in and of themselves do not pose an unusual fire hazard when they are stored or placed on display for retail sales within a tent or temporary membrane structure unless they are actually ignited or discharged. Chapter 7 in this code contains several provisions that specifically deal with how fireworks can be safely displayed or stored in tents or temporary membrane structures for the purpose of selling them at retail. Those requirements are an effort to minimize the fire hazard associated with such fireworks.

A.7.4.9.2.4 See NFPA 30, *Flammable and Combustible Liquids Code*, for the separation distances.

A.7.5.1.1 Preliminary results of recent full scale fire tests indicate that automatic sprinkler systems designed for an Ordinary Hazard, Group 2 occupancy in accordance with NFPA 13, *Standard for the Installation of Sprinkler Systems*, might be suitable for protecting retail displays of consumer fireworks where the ceiling height does not exceed 10 ft (3.1 m) and might also be adequate for ceiling heights up to 16 ft (4.9 m). This implies that there may be a need to design the sprinkler system in new buildings for an Extra Hazard, Group 1 occupancy for ceiling heights greater than 16 ft (4.9 m). For existing buildings, existing sprinkler systems designed for an Ordinary Hazard, Group 2 occupancy should suffice. Until such time as additional fire testing is completed and more conclusive design criteria can be verified, designers of automatic sprinkler systems for areas where retail sales of consumer fireworks are located may want to consider these design criteria. For additional information contact the American Pyrotechnics Association (APA), PO Box 30438, Bethesda, MD 20824.

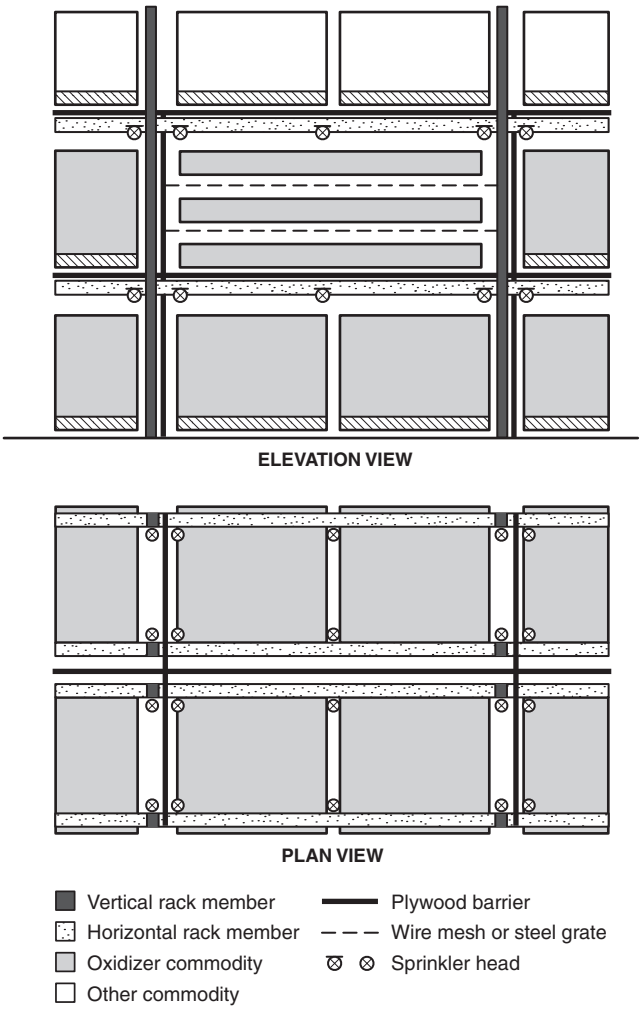

FIGURE A.7.3.15.7 Arrangement of Horizontal Barrier Separating Combustible Materials and Consumer Fireworks.

A.7.5.1.2(3) This item describes performance criteria for how consumer fireworks displayed for sale in stores are to be packaged and displayed and restrained as needed, depending upon the device and the manner in which it is packaged and displayed. Thus, upon ignition by a fire in the retail sales display area containing consumer fireworks, the resultant effect of the ejection of pyrotechnic components will be reasonably limited so as not to pose an undue threat to evacuating occupants or to cause rapid spread of the fire to areas remote from the immediate area of the fire. The method and manner of packaging and displaying consumer fireworks have been demonstrated to be effective in accomplishing the intent of this section. The performance criteria might also be met by enclosing consumer fireworks within bins.

Copyright National Fire Protection Association
Provided by IHS under license with NFPA
No reproduction or networking permitted without license from IHS
Not for Resale

The packaging material itself can be designed to contain the consumer fireworks. The placement and arrangement of the consumer fireworks within the packages or within bins or on shelves are also important factors. Other containment methods include fastening consumer fireworks together, restraining their movement with packaging materials, or placing consumer fireworks or packages of consumer fireworks within racks, containers, holders, or other structures.

Annex B Magazine Construction

This annex is not a part of the requirements of this NFPA document but is included for informational purposes only.

B.1 General. Magazines constructed in accordance with the following minimum specifications are approved as bullet resistant. All steel and wood dimensions are actual thickness; concrete block and brick dimensions are nominal.

B.2 Steel Exterior. The steel exterior of a magazine should be constructed of one of the following:

(1) 5/8 in. (16 mm) steel with an interior lining of nonsparking material
(2) 1/2 in. (13 mm) steel with an interior lining of at least 3/8 in. (9.5 mm) plywood
(3) 3/8 in. (9.5 mm) steel lined with one of the following materials:
  (a) 2 in. (51 mm) hardwood
  (b) 3 in. (76.2 mm) softwood
  (c) 2 in. (51 mm) plywood
(4) 1/4 in. (6.4 mm) steel lined with one of the following materials:
  (a) 3 in. (76.2 mm) hardwood
  (b) 5 in. (127 mm) softwood
  (c) 5 1/4 in. (133.4 mm) plywood
  (d) 1 1/2 in. (38.1 mm) plywood with an intermediate layer of 2 in. (51 mm) of hardwood
(5) 3/16 in. (4.8 mm) steel lined with one of the following materials:
  (a) 4 in. (101.6 mm) hardwood
  (b) 7 in. (177.8 mm) softwood
  (c) 6 3/4 in. (171.5 mm) plywood
  (d) 3/4 in. (19.1 mm) plywood with an intermediate layer of 3 in. (76.2 mm) of hardwood
(6) 1/8 in. (3.2 mm) steel lined with one of the following materials:
  (a) 5 in. (127 mm) hardwood
  (b) 9 in. (228.6 mm) softwood
  (c) 3/4 in. (19.1 mm) plywood with an intermediate layer of 4 in. (101.6 mm) of hardwood
  (d) Two layers of 3/4 in. (19.1 mm) plywood with an intermediate layer of 3 5/8 in. (92.1 mm), well-tamped, dry sand or sand/cement mixture

B.3 Fire-Resistant Exterior. The exterior of any type of fire-resistant material in a magazine should include one of the following to be considered structurally sound:

(1) Interior lining of 1/2 in. (13 mm) plywood placed securely against an intermediate 4 in. (101.6 mm) thick layer of solid concrete block, solid brick, or solid concrete
(2) Interior lining of 3/4 in. (19.1 mm) plywood and all of the following:
  (a) A first intermediate layer of 3/4 in. (19.1 mm) plywood
  (b) A second intermediate layer of 3 5/8 in. (92.1 mm), well-tamped, dry sand or sand/cement mixture
  (c) A third intermediate layer of 3/4 in. (19.1 mm) plywood
  (d) A fourth intermediate layer of 2 in. (51 mm) hardwood or 14 gauge steel
(3) Intermediate 6 in. (152.4 mm) space filled with well-tamped, dry sand or sand/cement mixture

B.4 Masonry Exterior. The masonry exterior of a magazine should be constructed of one of the following:

(1) Standard 8 in. (203.2 mm) concrete block with voids filled with well-tamped, dry sand or sand/cement mixture
(2) Standard 8 in. (203.2 mm) solid brick
(3) Solid concrete of 8 in. (203.2 mm)
(4) Two layers of 4 in. (101.6 mm) concrete block

Annex C Extract from American Pyrotechnics Association Standard 87-1, Standard for Construction and Approval for Transportation of Fireworks, Novelties, and Theatrical Pyrotechnics

This annex is not a part of the requirements of this NFPA document but is included for informational purposes only. The annex is an extract of the 2001 edition of APA 87-1.

C.1 Introduction.

C.1.1 This Standard provides manufacturers, importers, and distributors of fireworks and novelties with information to assist them in manufacturing, testing, shipping, and labeling the products of the fireworks industry in accordance with applicable federal laws and current good manufacturing practices. (GMPs). Paragraphs in this Standard which apply to the approval by the U.S. Department of Transportation (DOT) for transportation of fireworks are indicated by a dagger [†] at the end of the appropriate paragraphs. [†]

C.1.2 The information in this Standard should enable manufacturers, importers, and distributors of fireworks and novelties to provide their customers with products that can be transported and used safely and without unreasonable risk. [†]

C.1.3 Fireworks, pyrotechnic articles for theatrical purposes, and novelties are not acceptable for transportation within the jurisdiction of the United States unless they are classed, packaged, labeled, and marked and are in proper condition for shipment in accordance with DOT regulations in Title 49, CFR. *(See Section C.5 of this annex for further discussion.)* [†]

C.1.4 Consumer fireworks (fireworks classed as 1.4G and 1.4S) (formerly Fireworks, Common) and novelties are not acceptable for sale to the public unless they are manufactured, labeled, and sold in conformance with the regulations of the U.S. Consumer Product Safety Commission (CPSC) published in Title 16, CFR. *(See Section C.3 of this annex for further discussion.)* [†]

Note: Consumer Fireworks are normally classed as 1.4G but may be classed by DOT as 1.4S on the basis of examination and testing in accordance with Title 49, CFR, 173.56.

C.1.5 United States laws and regulations prescribe mandatory requirements that a person must follow in order to market certain products. In these instances, failure to comply may be regarded by courts as negligence *per se* in product liability litigation. [†]

C.1.6 This Standard applies to fireworks devices, pyrotechnic articles, and novelties for entertainment purposes. [†]

Copyright National Fire Protection Association
Provided by IHS under license with NFPA
No reproduction or networking permitted without license from IHS
Not for Resale

C.2 Definitions.

C.2.1 Approval. For purposes of this Standard, approval means the assignment of proper hazard class, EX (explosives approval) number, proper shipping name, and UN (United Nations) identification number by DOT so that fireworks and novelties may be transported under conditions specified in Title 49, CFR. *(See Section C.5 of this annex for details.)* [†]

C.2.2 Black Match (Instantaneous Fuse). An uncovered fuse made from thread impregnated with Black Powder and used for igniting pyrotechnic devices. Black match may be classed as 1.3G and described as Fuse, non-detonating, UN0101, under the provisions of this Standard. For any other classification, examination and testing as specified in Title 49, CFR, 173.56, CFR is required. *(See also Quick Match.)* [†]

C.2.3 Blowout. The unintended release of a pressure effect from other than the intended orifice of a fireworks device. Examples include expulsion of the bottom plug of a roman candle, expulsion of the clay choke of a fountain, or the rupturing of the wall of a mine or shell. [†]

C.2.4 Burnout. The unintended escape of flame through the wall of a pyrotechnic chamber during functioning of a fireworks device. [†]

C.2.5 Burst Charge. Chemical composition used to break open a fireworks device after it has been propelled into the air, producing a secondary effect such as a shower of stars. Burst charge is also sometimes referred to as expelling charge or break charge. Any burst charge containing metallic powder (such as magnalium or aluminum) less than 100 mesh in particle size, is considered to be intended to produce an audible effect, and is limited to 130 mg in 1.4G fireworks devices. Burst charge consisting of Black Powder or equivalent non-metallic composition is not considered to be intended to produce an audible effect when it is used to expel and ignite a secondary effect in a fireworks device. Burst charge for use in 1.3G fireworks is limited to Black Powder (potassium nitrate, sulfur, and charcoal) or similar pyrotechnic composition without metallic fuel for approval under the provisions of this Standard. [†]

C.2.6 Chemical Composition. All pyrotechnic and explosive composition contained in a fireworks device. Inert materials such as clay used for plugs, or organic matter such as rice hulls used for density control are not considered to be chemical composition. [†]

C.2.6.1 Explosive Composition. Any chemical compound or mixture, the primary purpose of which is to function by explosion, producing an audible effect (report) in a fireworks device. [†]

C.2.6.2 Pyrotechnic Composition. A chemical mixture which on burning, and without explosion, produces visible or brilliant displays or bright lights, or whistles or motion. [†]

C.2.7 Fireworks. Any device, other than a novelty or theatrical pyrotechnic article, intended to produce visible and/or audible effects, by combustion, deflagration, or detonation. Fireworks are further described as Fireworks UN0336 (formerly Common Fireworks and now referred to in this Standard as Consumer Fireworks) or Fireworks UN0335 (formerly Special Fireworks and now referred to in this Standard as Display Fireworks). Fireworks may also be described as Fireworks UN0337 if examination and testing in accordance with Title 49, CFR, 173.56 is performed that warrants that classification. [†]

Note: Propelling and expelling charges consisting of a mixture of sulfur, charcoal, and potassium nitrate (saltpeter or similar pyrotechnic compositions not containing metal powders) are not considered as designed to produce audible effects.

C.2.7.1 Consumer Fireworks (formerly Common Fireworks). Any fireworks device in a finished state, exclusive of mere ornamentation, suitable for use by the public that complies with the construction, performance, composition, and labeling requirements promulgated by CPSC in Title 16, CFR, in addition to any limits and other requirements of this Standard. *(See Section C.3 of this annex for details.)* [†]

C.2.7.2 Display Fireworks (formerly Special Fireworks). Fireworks devices in a finished state, exclusive of mere ornamentation, primarily intended for commercial displays which are designed to produce visible and/or audible effects, by combustion, deflagration or detonation, including, but not limited to: salutes containing more than 130 mg (2 grains) of explosive composition; aerial shells containing more than 40 g of chemical composition exclusive of lift charge; and other exhibition display items that exceed the limits contained in this Standard for consumer fireworks. Certain devices intended for signaling, illuminating, and incendiary purposes and formerly classed as Special Fireworks no longer fall into this fireworks category. *(See Section C.4 of this annex for details.)* [†]

C.2.8 Electric Match (Igniter). A device used for the electrical ignition of fireworks and pyrotechnic articles that contains a small amount of pyrotechnic material that ignites when a specified electric current flows through the leads. [†]

C.2.9 Labeling. A display of written, printed, or graphic matter upon a fireworks device and/or upon the immediate package of any such device(s). Included are diamond-shaped labels required by DOT to be displayed on outside packaging for transportation purposes. The term also includes any identification, cautions, and other information required by this Standard or by any federal government agency. [†]

C.2.10 Lift Charge. Pyrotechnic composition used to propel a component of a mine or shell device into the air. Lift charge is limited to Black Powder (potassium nitrate, sulfur, and charcoal) or similar pyrotechnic composition without metallic fuel. [†]

C.2.11 Marking. The application of the proper shipping name, identification number (UN number), instructions, cautions, weight, or specification mark or combination thereof to a package of hazardous material. Marking also includes any required specification mark on a shipping package. [†]

C.2.12 Novelty. A device containing small amounts of pyrotechnic and/or explosive composition. Such devices produce limited visible or audible effects. These items must be approved by DOT and are normally classed as 1.4G. A different classification may be assigned based on testing and examination as specified in Title 49, CFR, 173.56. Certain novelties which meet the criteria specified in C.3.2 are not regulated as explosives, and approval by DOT is not required for those specific items. [†]

C.2.13 Placard. A warning symbol of a square-on-point configuration mounted on each side and each end of a truck, rail car or freight container which informs the public and emergency personnel of the hazardous nature of the cargo, as specified in Title 49, CFR, 172. [†]

Copyright National Fire Protection Association
Provided by IHS under license with NFPA
No reproduction or networking permitted without license from IHS
Not for Resale

C.2.14 Quick Match (Instantaneous Fuse). Black match that is encased in a loose-fitting paper or plastic sheath to make it burn extremely rapidly. Quick match is used for aerial shells and for simultaneous ignition of a number of pyrotechnic devices, such as lances in a ground display piece. Quick match may be approved under the provisions of this Standard and classed as 1.3G, described as Fuse, non-detonating, and assigned identification number UN0101. A different classification may be recommended based on testing and examination as specified in Title 49, CFR, 173.56. [†]

C.2.15 Safety Fuse. A fuse consisting of a thread-wrapped Black Powder train that has been coated with a water resistant material. Such fuse is typically 3⁄32 in. (2.4 mm) in outside diameter and frequently green in color. Safety Fuse is described as Fuse, Safety UN0105 and classed as 1.4S. [†]

C.2.16 Star. A pressed or consolidated pellet of pyrotechnic composition that is usually cylindrical, spherical, or rectangular in shape. Stars are fired from a launch tube by means of a propelling charge of Black Powder in roman candles and mines, or they are a component of an insert that is fired into the air in an aerial shell. Stars produce a visible display of color and light as they burn in the air, and sometimes a crackling or similar audible effect is also produced. Stars are typically 0.375-1.0 in. in diameter. Larger cylindrical stars are known as comets. A star is not considered a finished firework, and stars cannot be approved for transportation under the provisions of this Standard. [†]

C.2.17 Theatrical Pyrotechnics. Pyrotechnic devices for professional use in the entertainment industry similar to consumer fireworks in chemical composition and construction but not intended for consumer use. Such articles, meeting the lift and effect powder weight limits for similar consumer fireworks but not labeled as such, and containing only chemicals listed in Table C.3.7.1 may be approved under the provisions of this Standard and classified as Articles, Pyrotechnic, 1.4G, UN0431. [†]

Note: Theatrical pyrotechnics devices may be classed by DOT as Articles, Pyrotechnic, 1.4S, UN0432 or as Articles, Pyrotechnic, 1.3G, UN0430 on the basis of examination and testing as specified in Title 49, CFR, 173.56.

C.3 Requirements for Consumer Fireworks, Novelties, and Theatrical Pyrotechnics.

Note 1: Devices in this category, formerly classed as Class C Explosive, Common Fireworks, are now classed as Fireworks 1.4G under the UN System, and referred to in this Standard as Consumer Fireworks.

Note 2: Devices intended for non-consumer use in the entertainment industry, termed Theatrical Pyrotechnics in this Standard, that meet the chemical composition weight requirements of Section C.3 may be classed as 1.4G and described as Articles, Pyrotechnic UN0431 under the provisions of this Standard, but are not required to comply with the fuse, construction, and labeling requirements of CPSC for consumer fireworks. Theatrical Pyrotechnics may or may not have an ignition device attached.

C.3.1 Types of Consumer Fireworks. The following fireworks devices are subject to the requirements of Section C.3 of this annex. *(See Appendix A of APA Standard 87-1 for diagrams.)* [†]

C.3.1.1 Ground and Hand-held Sparkling Devices ("Sparklers"). These devices are ground-based or hand-held devices that produce a shower of white, gold, or colored sparks as their primary pyrotechnic effect. Additional effects may include a colored flame, an audible crackling effect, an audible whistle effect, and smoke. These devices do not rise into the air, do not fire inserts or projectiles into the air, and do not explode or produce a report (a mild audible crackling-type effect is not considered to be a report). Ground-based or hand-held devices that produce a cloud of smoke as their sole pyrotechnic effect are also included in this category. Types of devices in this category include those in C.3.1.1.1 through C.3.1.1.8. [†]

C.3.1.1.1 Cylindrical Fountain. Cylindrical tube containing not more than 75 g of pyrotechnic composition. Upon ignition, a shower of colored sparks, and sometimes a whistling effect or smoke, is produced. This device may be provided with a spike for insertion into the ground (Spike Fountain), a wood or plastic base for placing on the ground (Base Fountain), or a wood or cardboard handle to be hand held (Handle Fountain). When more than 1 tube is mounted on a common base, total pyrotechnic composition may not exceed 200 g. *(See C.3.5 for exceptions.)* [†]

C.3.1.1.2 Cone Fountain. Cardboard or heavy paper cone containing not more than 50 g of pyrotechnic composition. The effect is the same as that of a cylindrical fountain. When more than 1 cone is mounted on a common base, total pyrotechnic composition may not exceed 200 g. *(See C.3.5 for exceptions.)* [†]

C.3.1.1.3 Illuminating Torch. Cylindrical tube containing not more than 100 g of pyrotechnic composition that produces a colored flame upon ignition. May be spike, base, or hand held. When more than 1 tube is mounted on a common base, total pyrotechnic composition may not exceed 200 g. *(See C.3.5 for exceptions.)* [†]

C.3.1.1.4 Wheel. Pyrotechnic device intended to be attached to a post or tree by means of a nail or string. May have one or more drivers, each of which may contain not more than 60 g of pyrotechnic composition. No wheel may contain more than 200 g total pyrotechnic composition. Upon ignition, the wheel revolves, producing a shower of color and sparks and, sometimes, a whistling effect. [†]

C.3.1.1.5 Ground Spinner. Small device containing not more than 20 g of pyrotechnic composition, venting out an orifice usually on the side of the tube. Similar in operation to a wheel but intended to be placed flat on the ground and ignited. A shower of sparks and color is produced by the rapidly spinning device. [†]

C.3.1.1.6 Flitter Sparkler. Narrow paper tube attached to a stick or wire and filled with not more than 5 g of pyrotechnic composition that produces color and sparks upon ignition. The paper at one end of the tube is ignited to make the device function. [†]

C.3.1.1.7 Toy Smoke Device. Small plastic or paper item containing not more than 100 g of pyrotechnic composition that, upon ignition, produces white or colored smoke as the primary effect. *(For devices containing less than 5 g of pyrotechnic composition, see Section 3.2, Novelties.)* Toy smoke devices, when complying with the provisions of this section, are classed as Fireworks, 1.4G unless classed as 1.4S or not regulated as an explosive on the basis of examination and testing as specified in Title 49, CFR, 173.56. [†]

Copyright National Fire Protection Association
Provided by IHS under license with NFPA
No reproduction or networking permitted without license from IHS
Not for Resale

C.3.1.1.8 Wire Sparkler/Dipped Stick. These devices consist of a metal wire or wood dowel that has been coated with pyrotechnic composition. Upon ignition of the tip of the device, a shower of sparks is produced. Sparklers may contain up to 100 g of pyrotechnic composition per item. Certain wire sparklers and dipped sticks are considered as novelties under this Standard. *(See C.3.2.)* [†]

C.3.1.2 Aerial Devices.

C.3.1.2.1 Sky Rockets and Bottle Rockets. Cylindrical tube containing not more than 20 g of chemical composition with a wooden stick attached for guidance and stability. Rockets rise into the air upon ignition. A burst of color and/or sound may be produced at or near the height of flight. [†]

C.3.1.2.2 Missile-Type Rocket. A device similar to a sky rocket in size, composition, and effect that uses fins rather than a stick for guidance and stability. Missiles shall contain not more than 20 g of total chemical composition. [†]

C.3.1.2.3 Helicopter, Aerial Spinner. A tube containing not more than 20 g of chemical composition, with a propeller or blade attached. Upon ignition the rapidly spinning device rises into the air. A visible or audible effect may be produced at or near the height of flight. [†]

C.3.1.2.4 Roman Candle. Heavy paper or cardboard tube containing not more than 20 g of chemical composition. Upon ignition, stars *(see C.2.14)* are individually expelled. [†]

C.3.1.2.5 Mine and Shell Devices. Heavy cardboard or paper tube usually attached to a wooden or plastic base and containing not more than 60 g of total chemical composition (lift charge, burst charge, and visible/audible effect composition.) Upon ignition stars, components producing reports containing up to 130 mg of explosive composition per report, or other devices are propelled into the air. The term *mine* refers to a device with no internal components containing a bursting charge, and the term *shell* refers to a device that propels a component that subsequently bursts open in the air. A mine or shell device may contain more than 1 tube provided the tubes fire in sequence upon ignition of 1 external fuse. The term *cake* refers to a dense-packed collection of mine/shell tubes. Total chemical composition including lift charges of any multiple-tube devices may not exceed 200 g. The maximum quantity of lift charge in any one tube of a mine or shell device shall not exceed 20 g, and the maximum quantity of break or bursting charge in any component shall not exceed 25 percent of the total weight of chemical composition in the component. [†]

Note: Shells that are offered for transportation without a launching tube may not be approved as Fireworks, 1.4G, UN0336 under the provisions of this Standard, except as provided in C.3.1.2.6 for kits. Aerial shells without launching tubes may be approved for transportation as Fireworks, 1.3G, UN0335. *(See C.4.1.1.)*

C.3.1.2.6 Aerial Shell Kit, Reloadable Tube. A package (kit) containing a cardboard, high-density polyethylene (HDPE), or equivalent launching tube and not more than 12 small aerial shells. *(See C.4.1.1)* Each aerial shell is limited to a maximum of 60 g of total chemical composition (lift charge, burst charge, and visible/audible effect composition), and the maximum diameter of each shell shall not exceed 1.75 inches. In addition, the maximum quantity of lift charge in any shell shall not exceed 20 g, and the maximum quantity of break or bursting charge in any shell shall not exceed 25 percent of the total weight of chemical composition in the shell. The total chemical composition of all the shells in a kit, including lift charge, shall not exceed 400 g for approval under the provisions of this standard. The user lowers a shell into the launching tube, at the time of firing, with the fuse extending out of the top of the tube. After firing, the tube is then reloaded with another shell for the next firing. All launching tubes must be capable of firing twice the number of shells in the kit without failure of the tube. Each package of 12 shells must comply with all warning label requirements of CPSC. [†]

C.3.1.3 Audible Ground Devices.

C.3.1.3.1 Firecracker. Small, paper-wrapped or cardboard tube containing not more than 50 mg of explosive composition, those used in aerial devices may contain not more than 130 mg of explosive composition per report. Upon ignition, noise and a flash of light are produced. [†]

Note: Firecrackers are not subject to the requirements of fuse in C.3.5.1 and chemicals in C.3.6.1 of this annex.

C.3.1.3.2 Chaser. Paper or cardboard tube venting out the fuse end of the tube containing not more than 20 g of chemical composition. The device travels along the ground upon ignition. A whistling effect, or other noise, is often produced. Explosive composition may be included to produce a report but may not exceed 50 mg. [†]

C.3.2 Novelties. The following devices do not require approval from DOT and are not regulated as explosives under the provisions of this Standard, provided that they are manufactured and packaged as described below. Any devices not complying with the requirements set forth in this section require approval from DOT, and are classed as Fireworks 1.4G and described as Fireworks, UN0336, unless they are classed as 1.4S or not regulated as hazardous materials based on examination and testing as specified in Title 49, CFR, 173.56. Devices described in this section which are not regulated as explosives are not considered to be consumer fireworks; however, these devices must still comply with all labeling requirements of CPSC applicable to consumer fireworks devices. Novelties must be packaged in strong outer packagings that are sealed to prevent leakage of the contents. Each package, and overpack if used, offered for surface transportation must be plainly marked NOVELTIES, NOT REGULATED, EXCEPT WHEN TRANSPORTED BY AIR, IN CONFORMANCE WITH APA STANDARD 87-1. If novelties are transported by aircraft, they must be classed, labeled, and described as Flammable Solid, Inorganic, n.o.s (Novelties), UN3178. [†]

C.3.2.1 Party Popper. Small devices with paper or plastic exteriors that are actuated by means of friction (a string or trigger is typically pulled to actuate the device.) They frequently resemble champagne bottles or toy pistols in shape. Upon activation, the device expels flame-resistant paper streamers, confetti, or other novelties and produces a small report. Devices may contain not more than 16 mg (0.25 grains) of explosive composition, which is limited to potassium chlorate and red phosphorus. These devices must be packaged in an inner packaging which contains a maximum of 72 devices. [†]

C.3.2.2 Snapper. Small, paper-wrapped devices containing not more than 1.0 mg of silver fulminate coated on small bits of sand or gravel. When dropped, the device explodes, producing a small report. Snappers must be in inner packages not to exceed 50 devices each, and the inner packages must contain sawdust or a similar, impact-absorbing material. [†]

Copyright National Fire Protection Association
Provided by IHS under license with NFPA
No reproduction or networking permitted without license from IHS
Not for Resale

C.3.2.3 Toy Smoke Devices. Small devices consisting of cork-like spheres, or cardboard or plastic tubes, containing not more than 5 g of pyrotechnic composition that produces a small cloud of smoke after activation. The devices are typically ignited by means of safety fuse. The outer configuration is usually a sphere (smoke ball), cylindrical tube, or paper cone. The chemical composition for white smoke consists of potassium nitrate and sulfur, while colored smokes are produced by mixtures consisting of potassium chlorate, sulfur or sugar, and a sublimable organic dye. Mixtures containing potassium chlorate must also contain a neutralizer/coolant such as sodium bicarbonate. To be eligible for not regulated status, these devices must produce smoke as their sole pyrotechnic effect following ignition, and must be packaged in inner units containing a maximum of 72 devices. [†]

C.3.2.4 Snakes, Glow Worms. Pressed pellets of pyrotechnic composition that contain 2 g or less of composition per article. Upon burning, they produce a snake-like ash that expands in length as the pellet burns. Chemical compositions vary, but typically contain ammonium perchlorate, nitrated pitch, asphaltum, and similar carbonaceous materials. These devices are limited to a maximum of 25 pellets per inner package in order to be transported as not regulated devices. [†]

C.3.2.5 Wire Sparklers, Dipped Sticks. These devices consist of a metal wire or wood dowel that has been coated with pyrotechnic composition. Upon ignition of the tip of the device, a shower of sparks is produced. Sparklers may contain up to 100 g of composition per item. Sparklers typically use barium nitrate as the oxidizer, with aluminum and dextrine as fuels. Iron filings produce the spark effect. Color-producing sparklers use potassium perchlorate as an oxidizer. Any sparkler containing a chlorate or perchlorate oxidizer is limited to a maximum of 5 g of composition per article. Sparklers must be packaged in inner packagings that contain 8 devices or less to be transported as not regulated devices. [†]

C.3.3 Toy Caps. Toy plastic or paper caps for toy pistols in sheets, strips, rolls, or individual caps, containing not more than an average of 0.25 grains (16 mg) of explosive composition per cap. Toy caps are described as Toy Caps NA0337 and classed as 1.4S. Toy caps shall only be approved for transportation using the procedure specified in Title 49, CFR, § 173.56(b). [†]

C.3.4 Other Devices. The Approvals Branch at DOT should be contacted regarding the requirements and procedures for approval of any device that is a unique shape or design, or any device that produces unique pyrotechnic or explosive effects, or combinations of effects not enumerated in Section C.3 of this Standard. [†]

C.3.5 Multiple Tube Fireworks Devices and Pyrotechnic Articles.

C.3.5.1 Multiple-tube devices contain more than one cardboard tube. The ignition of one external fuse causes all of the tubes to function in sequence. The tubes are either individually attached to a wood or plastic base, or are dense-packed and are held together by glue, wire, string, or other means that securely holds the tubes together during operation. [†]

C.3.5.2 Multiple tube devices are normally limited to a maximum of 200 g of total pyrotechnic composition for approval as Fireworks, UN0336, 1.4G or Article, Pyrotechnic, UN0431, 1.4G under this Standard. *(See C.3.5.4 for exceptions.)* The weight of chemical composition per tube is limited to the weight limit for the specific type of device in the tube. *(See C.3.1 for the weight limits per tube, based on type of effect.)* [†]

C.3.5.3 The connecting fuses on multiple-tube devices must be fused in sequence so that the tubes fire sequentially rather than all at once. [†]

C.3.5.4 When the tubes are securely attached to a wood or plastic base, and the tubes are separated from each other on the base by a distance of at least 0.50 in. (12.7 mm), a maximum total weight of 500 g of pyrotechnic composition shall be permitted for approval as 1.4G. [†]

C.3.6 Specific Requirements for Consumer Fireworks.

C.3.6.1 Fuse.

C.3.6.1.1 Only safety fuse or other fuse that has been protected to resist side ignition may be used in consumer fireworks devices subject to the requirements of this Standard. [†]

Note: See APA 87-1, Appendix B, for method of measuring resistance to side ignition. Devices, such as ground spinners, that require a restricted orifice for proper functioning and that contain less than 6 g of pyrotechnic composition, are not subject to the requirements of C.3.6.1.1.

C.3.6.1.2 The fuse must be of sufficient length to burn at least 3 seconds but not more than 9 seconds before ignition of the device. The fuse for roman candles or similar devices requiring a longer fuse for safe functioning may burn up to 12 seconds before ignition of the device. [†]

C.3.6.1.3 The fuse must be securely attached so that it will support either the weight of the device plus 8 ounces (227 g) of dead weight or double the weight of the device, whichever is less, without separation from the fireworks device. [†]

C.3.6.1.4 The fuse on multiple tube devices must be fused in sequence between individual tubes. [†]

C.3.6.2 Construction.

C.3.6.2.1 Bases. Each fireworks device that requires a base shall utilize a base of wood or plastic (preferably non-brittle, medium impact polystyrene). The minimum horizontal dimension or the diameter of the base must be equal to at least the height of the device (excluding any protruding fuse), unless the device remains upright when subjected to a tilt of 12 degrees from the horizontal. Bases shall remain firmly attached to the item during transportation, handling, and normal operation. *(See APA 87-1, Appendix B, for method of measuring.)* [†]

Note: Multiple tube mine and shell devices which contain at least one launching tube with an inner diameter of 1.5 inches or greater must be stable when placed on a test fixture that holds the device at a 60° angle. This is a static test, the fireworks device is not ignited while at a 60° angle.

C.3.6.2.2 Sticks. The stick on a rocket (sky rockets and bottle rockets), and on other fireworks devices that utilize a stick, shall be firmly attached to the body of the device by means of glue, staples, or wire. Sticks must be secure enough to remain firmly attached during transportation, handling, and normal operation. Sticks shall be rigid and of such length so as to assure stable flight. The maximum curvature of such stick(s) may not exceed 1 in. (25 mm). *(See APA 87-1, Appendix B, for method of testing rigidity.)* [†]

C.3.6.2.3 Handles. Each fireworks device which is intended to be hand-held, and is so labeled, must incorporate a handle at least 4 in. (101 mm) in length. Handles must remain firmly attached during transportation, handling, and normal operation of the device. Or must consist of an integral section of the

Copyright National Fire Protection Association
Provided by IHS under license with NFPA
No reproduction or networking permitted without license from IHS
Not for Resale

device which extends at least 4 in. (101 mm) below the pyrotechnic chamber. Sparklers 10 in. (253 mm) or less in length shall have handles at least 3 in. (76 mm) in length. [†]

C.3.6.2.4 Spikes. Spikes which constitute an integral part of a fireworks device shall protrude at least 2 in. (51 mm) from the base of the device and shall have a blunt tip not less than ⅛ in. (3.2 mm) in diameter or ⅛ in. (3.2 mm) square. [†]

C.3.6.2.5 Pyrotechnic Chamber. The pyrotechnic chamber in a fireworks device that functions other than by exploding must be of sufficient thickness and rigidity to allow normal functioning of the device without burnout or blowout. The chamber must also be constructed and sealed to prevent leakage of the pyrotechnic composition during transportation, handling, and normal operation. [†]

C.3.6.2.6 Wings. Wings on helicopter-type rockets and similar devices must be securely attached to the body by means of gluing, wiring, or other appropriate means so that they will remain firmly attached during transportation, handling, and normal operation. [†]

C.3.6.2.7 Wheel Devices. Each wheel device must be constructed so that the driver(s), motor(s), and axle(s), when needed (i.e., on wheel devices intended to operate in a fixed location) remain securely attached to the device during transportation, handling, and normal operation. [†]

C.3.6.2.8 Aerial Devices. Each device intended to produce a visible or audible effect high in the air must be designed to produce the effect at or near the apex of its flight. [†]

C.3.6.2.9 Smoke Devices. Each smoke device must be constructed so that it will neither burst nor produce excessive flame (excluding fuse and small but brief bursts of flame accompanying normal smoke production). Smoke devices may not contain plastic in direct contact with the pyrotechnic composition, nor may smoke devices resemble, in color and configuration, banned fireworks devices, such as M-80 salutes, cherry bombs, or silver salutes. [†]

C.3.7 Prohibited Chemicals and Components.

C.3.7.1 Prohibited Chemicals. Consumer fireworks devices offered or intended for sale to the public may not contain a chemical enumerated in Table C.3.7.1, except for small amounts (less than 0.25% by weight) as impurities, and except as specified therein. [†]

Note: Display fireworks and theatrical pyrotechnics *(see C.2.15)* are not subject to the provisions of this section.

C.3.7.2 Prohibited Components. No component of any consumer fireworks device or novelty may, upon functioning, project or disperse any metal, glass, or brittle plastic fragments. [†]

C.3.7.3 Forbidden Devices. Any device intended for sale to the public that produces an audible effect (other than a whistle) by a charge of more than 130 mg (2 grains) of explosive composition per report. Devices obtained for bonafide pest control purposes in accordance with regulations promulgated by CPSC in Title 16, CFR are not forbidden if approved in accordance with Title 49, CFR, 173.56. [†]

Note: For transportation purposes, the term, *forbidden devices,* may also include mixtures or devices that contain a chlorate and an ammonium salt, or an acidic metal, salt. Or, devices that contain yellow or white phosphorus, devices that combine an explosive and a detonator or blasting cap. And, any device that has not been approved by the DOT.

Table C.3.7.1 Prohibited Chemicals for Consumer Fireworks

1. Arsenic sulfide, arsenates, or arsenites
2. Boron
3. Chlorates, except:
   a. In colored smoke mixtures in which an equal or greater weight of sodium bicarbonate is included
   b. In party poppers
   c. In those small items (such as ground spinners) wherein the total powder content does not exceed 4 g of which not greater than 15% (or 600 mg) is potassium, sodium, or barium chlorate
   d. In firecrackers
   e. In toy caps
4. Gallates or gallic acid
5. Magnesium (magnesium/aluminum alloys, called magnalium, are permitted)
6. Mercury salts
7. Phosphorus (red or white) (red phosphorus is permissible in caps and party poppers)
8. Picrates or picric acid
9. Thiocyanates
10. Titanium, except in particle size that does not pass through a 100-mesh sieve
11. Zirconium
12. Lead tetroxide (red lead oxide) and other lead compounds

C.3.8 Specific Requirements for Theatrical Pyrotechnics.

C.3.8.1 Theatrical pyrotechnics that are approved as UN0431, Articles, Pyrotechnic, 1.4G shall not bear a warning label that resembles the required wording on a consumer fireworks device. A warning label providing instructions to a trained operator is permitted, but alternative wording must be used. [†]

C.3.8.2 Theatrical pyrotechnics may or may not have an ignition device attached. [†]

C.3.8.3 All requests for approval of a device as Articles, Pyrotechnic shall be accompanied by a signed certification stating that the article is intended for professional use in the entertainment industry and will not be offered for sale to the general public. [†]

C.3.8.4 Approvals for classification as Articles, Pyrotechnic shall be evaluated based on the weight of pyrotechnic composition in the individual article, and compared to the allowable weights for the corresponding category of 1.4G consumer fireworks. If a 1.4G classification is desired for an article containing more pyrotechnic composition than is permitted for a comparable consumer firework, the DOT approval procedure in Title 49, CFR, 173.56(b)(1) shall be followed. [†]

C.3.9 Approval. All consumer fireworks (Fireworks, UN0336), novelties, and theatrical pyrotechnics offered for transportation in the United States shall be classified and approved for transportation purposes by the DOT, in accordance with the following procedure. [†]

C.3.9.1 Fireworks and novelties containing mixtures of chemicals specified in Table C.4.3.1, but none of the chemicals prohibited by C.3.7. For each item for which approval is sought, manufacturers shall submit a copy of an approval application *(see APA 87-1, Appendix D)* to DOT. DOT may issue an approval for the

Copyright National Fire Protection Association
Provided by IHS under license with NFPA
No reproduction or networking permitted without license from IHS
Not for Resale

device as 1.4G based on the information contained in the form or, at its option, may require laboratory examination by a person approved by DOT to examine explosives. [†]

C.3.9.2 Fireworks and novelties containing any chemical not specified in Table C.4.3.1, but none of the chemicals prohibited by C.3.7. For each item in which approval is sought, the manufacturer shall obtain a report from a person approved by DOT to examine explosives or, obtain a test report from a recognized competent authority (for fireworks manufactured abroad). The manufacturer shall then submit an approval application *(see APA 87-1, Appendix D)* together with the appropriate examination reports to DOT. DOT may then issue approval based on the information contained in the application and accompanying laboratory reports, or may require additional information. [†]

C.3.9.3 Theatrical pyrotechnics containing only mixtures of chemicals specified in Table C.4.3.1. For each item in which approval is sought, manufacturers shall submit a copy of an approval application *(see APA 87-1, Appendix D)* to DOT. DOT may issue an approval for the device as 1.4G based on the information contained in the form. Or, at DOT's discretion, may require a report from a person approved by DOT to examine explosives or may require a test report from a recognized competent authority (for articles manufactured abroad). [†]

C.3.9.4 Theatrical pyrotechnics containing any chemical not specified in Table C.4.3.1. For each item in which approval is sought, the manufacturer shall obtain a report from a person approved by DOT to examine explosives or obtain a test report from a recognized competent authority (for articles manufactured abroad.) The manufacturer shall then submit an approval application *(see Appendix D of this Standard)* together with the appropriate laboratory reports to DOT. DOT may then issue an approval based on the information contained in the application and accompanying laboratory reports. [†]

C.3.9.5 If classification other than 1.4G is sought, the DOT approval procedure in Title 49, CFR, 173.56(b)(1) must be followed. This includes obtaining a laboratory report from a person approved by DOT to examine explosives. [†]

C.3.10 Marking and Labeling. Fireworks intended for consumer sale and use shall be labeled in conformance with the requirements of the Federal Hazardous Substances Act and regulations promulgated thereunder in Title 16, CFR, 1500. All outside packaging containing fireworks must be marked and labeled in conformance with Title 49, CFR, 172. *(See APA 87-1, Appendix C, and Section C.5 of this annex for details and examples.)* [†]

C.4 Requirements for Display Fireworks Devices. Note: Devices in this category, formerly classed as Class B Explosives, Special Fireworks, are now classed as 1.3G, under the UN system and referred to as display fireworks. [†]

C.4.1 Types of Display Fireworks Devices. The following fireworks devices are subject to the requirements of Section C.4 of this annex. [†]

C.4.1.1 Aerial Shell. A cylindrical or spherical cartridge containing lift charge, burst charge and effect composition. Shells are most commonly 2 inches (50 mm) to 6 inches (152 mm) in diameter, and are fired from metal, high-density polyethylene (HDPE), fiberglass, or heavy cardboard tubes. Upon firing, the lift charge is consumed and the cartridge is expelled into the air. A pyrotechnic effect is produced near the apex of flight. Aerial shells are typically ignited by means of a quick match fuse or electric match. Burst charge used in aerial shells is limited to Black Powder (potassium nitrate, sulfur, and charcoal) or similar pyrotechnic composition may not be approved under the provisions of this Standard as 1.3G articles. Aerial shells exceeding 10 inches (250 mm) in diameter or containing a burst charge that has metallic fuel may be approved under this Standard as Fireworks, UN0333, 1.1G. [†]

Note: All aerial shells that are not contained in a launch tube (C.3.1.2.5) or sold as part of a reloadable shell kit (C.3.1.2.6) may only be approved under the provisions of this Standard as Fireworks, UN0335, 1.3G.

C.4.1.2 Salute. Paper-wrapped, cardboard tube, or sphere containing explosive composition in excess of 130 mg (2 grains.) Upon ignition, noise and a flash of light are produced. The maximum quantity of explosive composition in a salute shell, or in a salute component of a multi-effect shell, shall not exceed 2.5 oz (71 g) for approval under this Standard as a 1.3G article. Salutes or articles with salute components containing more than 2.5 oz (71 g) of explosive composition per salute or per component may be approved under this Standard as Fireworks, UN0333 1.1G. [†]

C.4.1.3 Other Fireworks Devices.

C.4.1.3.1 When the quantity of explosive and/or pyrotechnic composition exceeds the limit for inclusion in the Fireworks, UN0336 category, devices enumerated in C.3.1 are classed as 1.3G and described as Fireworks, UN0335 (formerly described as Fireworks, Special and classed as Class B Explosives). This includes multiple tube devices containing more than 200 g of total chemical composition, except as otherwise specified in C.3.5. [†]

C.4.1.3.2 Certain devices intended for signaling, illuminating, and incendiary purposes such as: railway torpedoes; airplane flares; illuminating projectiles; incendiary and smoke projectiles, as well as flash cartridges (formerly classed as special fireworks), no longer fall into the fireworks category under DOT regulations effective on 10/1/91, and are not part of this Standard. [†]

C.4.2 Construction of Aerial Shells.

C.4.2.1 Each shell shall be identified only in terms of the inside diameter (not the circumference) of the mortar in which it can be safely used [e.g., 3 in. (76 mm) shells are only for use in 3 in. (76 mm) mortars]. [†]

C.4.2.2 Each shell shall be constructed so that the difference between the inside diameter of the mortar in which it can be safely used and the outside diameter of the shell is no less than ⅛ in. (3.2 mm) and not more than ¼ in. (6.4 mm) for shells not exceeding 3 in. (76 mm) or ½ in. (12.7 mm) for shells larger than 3 in. (76 mm). [†]

C.4.2.3 Each shell needs to be marked with the type of shell, the diameter measurement, and the name of the manufacturer or distributor. [†]

C.4.2.4 The length of the internal delay fuse and the amount of lift charge must be sized to insure proper functioning of the shell in its mortar. Quick match fuse, if required, must be long enough to allow not less than 6 in. (152 mm) of fuse to protrude from the mortar after the shell is properly inserted. [†]

Copyright National Fire Protection Association
Provided by IHS under license with NFPA
No reproduction or networking permitted without license from IHS
Not for Resale

C.4.2.5 The length of exposed black match on a shell, if required, may not be less than 3 in. (76 mm) and the fuse shall not be folded or doubled back under the safety cap. Also, the time delay between ignition of the tip of the exposed black match and ignition of the lift charge may not be less than 3 seconds to allow the operator to retreat safely. [†]

C.4.2.6 A safety cap shall be installed over the exposed end of the fuse, if ignition fuse is present. The safety cap must be of a different color than that used for the paper of the fuse. [†]

C.4.2.7 If an electric match is attached to an aerial shell or other display firework prior to transportation, the requirements in C.5.8 must be complied with. [†]

C.4.3 Approval. Prior to being offered for transportation in the United States all display fireworks (Fireworks, 1.3G) must be classified and approved by DOT in accordance with the following procedures. [†]

C.4.3.1 Devices Containing Only Mixtures of Chemicals Specified in Table C.4.3.1. The manufacturer shall submit a copy of an approval application *(see APA 87-1, Appendix D)* to DOT for any item that has not previously been approved by DOT. DOT may issue an approval for the device based on the information contained in the form. Or, at its discretion, may require examination by a person approved by DOT to examine explosives, or may accept a test report from a recognized competent authority (for fireworks manufactured abroad). [†]

C.4.3.2 Devices Containing any Chemical not Specified in Table C.4.3.1. For each item in which approval is sought, the manufacturer shall submit a sample of each pyrotechnic mixture that contains any chemical not specified in Table C.4.3.1 to a person approved by DOT to examine explosives. Or, the applicant may obtain a test report from a recognized competent authority (for fireworks manufactured abroad). The manufacturer shall then submit an approval application *(see APA 87-1, Appendix D),* together with the appropriate laboratory reports to DOT. DOT may then issue approval based on the information contained in the application and accompanying laboratory report(s). [†]

Miscellaneous Compounds: Organic compounds may be compounds such as: lactose; shellac; red gum; chlorinated paraffin; and polyvinyl chloride that consist of some combination of carbon with hydrogen, oxygen and/or chlorine. Nitrogen may be present if it accounts for less than 10% (by weight) of the compound. [†]

Nitrocellulose with not more than 12.6% nitrogen by mass, that meets the criteria for classification as a 4.1 flammable solid, is permitted as a propelling or expelling charge provided there is less than 15 g of nitrocellulose per article. [†]

Note: Exact chemical identity of each organic compound must be included when submitting an approval application *(See APA 87-1, Appendix D)* to DOT. [†]

C.4.4 Approval for Combination Devices for Display Purposes. When two or more articles of consumer or display fireworks, or theatrical pyrotechnics (already approved by DOT) are combined to form one unit, a separate approval for the combination device is not required if all of the following conditions are met. [†]

C.4.4.1 The combination device is to be used for display or entertainment purposes, but is not intended for consumer use. [†]

Table C.4.3.1 Standard Fireworks Chemicals

Chemical	Typical Use
Aluminum	Fuel
Ammonium Perchlorate	Oxygen Donor
Antimony	Fuel
Antimony Sulfide	Fuel
Barium Carbonate	Neutralizer
Barium Nitrate	Oxygen Donor
Barium Sulfate	Oxygen Donor
Bismuth Oxide	Oxygen Donor
Boric Acid	Neutralizer
Calcium Carbonate	Neutralizer
Calcium Sulfate	Oxygen Donor
Carbon or Charcoal	Fuel
Copper Metal	Color Agent
Copper Oxide	Oxygen Donor/Color Agent
Copper Salts (except Copper Chlorate)	Color Agent
Dextrine	Fuel/Binder
Hexamethylenenetetramine (Hexamine)	Fuel
Iron and Iron Alloys (e.g., ferro/titanium)	Fuel
Iron Oxide	Oxygen Donor
Magnalium (Magnesium/Aluminum)	Fuel
Magnesium (in display fireworks and theatrical pyrotechnics only)	Fuel
Magnesium Carbonate	Neutralizer
Magnesium Sulfate	Oxygen Donor
Nitrocellulose (see Miscellaneous Compounds)	
Nitrocellulose Based Lacquers	Binder
Phosphorus, Red (only as provided in Table C.4.3.1)	Fuel
Potassium or Sodium Benzoate	Whistle
Potassium Bichromate (Potassium Dichromate) (not to exceed 5% of formulation)	Oxygen Donor
Potassium Chlorate (only as provided in Table C.4.3.1)	Oxygen Donor
Potassium Hydrogen Phthalate	Whistle
Potassium Nitrate	Oxygen Donor
Potassium Perchlorate	Oxygen Donor
Potassium Sulfate	Oxygen Donor
Silicon	Fuel
Sodium Bicarbonate (Sodium Hydrogen Carbonate)	Neutralizer
Sodium Nitrate	Oxygen Donor
Sodium Salicylate	Whistle
Sodium Salts (except Sodium Chlorate)	Color Agent
Sodium Sulphate	Oxygen Donor
Strontium Carbonate	Color Agent
Strontium Nitrate	Oxygen Donor
Strontium Salts (except Strontium Chlorate)	Color Agent
Strontium Sulfate	Oxygen Donor
Sulfur	Fuel
Titanium (particle size must not pass through 100 mesh sieve if 1.4G or 1.4S Fireworks)	Fuel

C.4.4.2 The combination device is constructed from approved fireworks, novelties, and theatrical pyrotechnics. [†]

C.4.4.3 The combination device is transported by private carrier. [†]

C.4.4.4 The assembled unit is transported using the EX numbers for the individual components. [†]

Copyright National Fire Protection Association
Provided by IHS under license with NFPA
No reproduction or networking permitted without license from IHS
Not for Resale

C.4.4.5 If all components of the combination device have been approved as 1.4G articles, the combination item is classed as a 1.4G article provided that the total weight of pyrotechnic composition (including lift and effect charges) in the article does not exceed 200 g. *(See Section C.3.5 for exception.)* The combination device shall be described as UN0431, Articles, Pyrotechnic, 1.4G if all of the components are approved as UN0431. Otherwise, the device shall be described as UN0336, Fireworks, 1.4G. [†]

C.4.4.6 If one or more of the components has been classed as a 1.3G Article, or if the total weight of pyrotechnic composition (including lift and effect charges) is more than 200 g *(see Section C.3.5 for exception)*, then the assembled unit is classed as a 1.3G Article. The combination device shall be described as UN0430, Articles, Pyrotechnic, 1.3G if all of the components are classed as either UN0430 or UN0431. Otherwise, the device shall be described as UN0335, Fireworks, 1.3G. [†]

C.5 Shipping Requirements.

C.5.1 Transportation Regulating Authorities. Transportation of fireworks is regulated by DOT. Some states and municipalities also regulate transportation of fireworks through their jurisdiction, often by incorporation of federal regulations. [†]

C.5.2 Approval. Except for samples prepared in accordance with DOT regulations, or unless specifically permitted by this Standard, no fireworks device or novelty may be offered for transportation or transported until it is classed and approved by DOT, and an approval number (EX number) is issued (Title 49, CFR, 173.86). *(See Sections C.3 and C.4 of this annex and APA 87-1, Appendix D.)* [†]

C.5.2.1 EX numbers for fireworks contained in a shipping carton must be marked on the shipping carton or on the shipping paper. [†]

C.5.2.2 Cartons containing 5 or more different fireworks devices must be marked with at least 5 of the EX numbers covering items in the carton, or the EX numbers must appear on the shipping paper [Title 49, CFR, 172.320(c) and (d)]. [†]

C.5.3 Packaging. With certain exceptions, Consumer Fireworks UN0336, Display Fireworks UN0335, Articles Pyrotechnic UN0431 and Novelties, must be securely packaged in containers complying with DOT regulations Title 49, CFR, 178. Gross weight limitation per package is now dictated by the weight marked on the certified packaging. Articles with match or friction tip ignition must be packed so that each individual tip is protected against accidental contact or friction. Loose chemical composition may not be present in packages in transportation [Title 49, CFR, 172.102(c), Special Provision (108)]. [†]

C.5.4 Placards. Unless otherwise provided, each motor vehicle, freight container and rail car must bear appropriate placards on each end and each side [Title 49, CFR, 172.504(a)]. Vehicles containing packages of consumer fireworks or novelties which are labeled 1.4G require a 1.4G or Explosive 1.4G placard (Title 49, CFR, 172.523), and use of the word *explosive* is optional [Title 49, CFR, 172.519(b)(3)], except highway and rail shipments of less than 1000 lb gross weight of such fireworks need not bear a placard [Title 49, CFR, 172.504(c)]. Vehicles containing display fireworks in any quantity require a 1.3G or Explosive 1.3G placard (Title 49, CFR, 172.522) and use of the word explosive is optional [Title 49, CFR, 173.519(b)(3)]. If both 1.4G and 1.3G are present in a shipment, the 1.3G placard is required, and the 1.4G placard is not needed. [†]

C.5.5 Package Marking and Labeling. Each person who offers fireworks for transportation shall ensure that the package displays the appropriate square-on-point label [Title 49, CFR, 172.400(a) and 172.411]. Use of the word *explosive* on the 1.3 G, and the 1.4G labels is not required [Title 49, CFR, 172.405(a)]. Consumer fireworks, toy smoke devices, and trick noisemakers are either classed as 1.4G, 1.4S, or not regulated for transportation purposes. Display fireworks are classed as 1.3G (Title 49, CFR, 172.101). The label must be printed or affixed to the surface of the package near the proper shipping name and identification number, which are also required to appear on the package [Title 49, CFR, Part 172.301(a)]. [†]

C.5.6 Shipping Papers. Each person who offers a fireworks device or novelty for transportation shall describe the item on a shipping paper. The description must include the proper shipping name (Title 49, CFR, 172.101 hazardous materials table, col. 2), the hazard class of the material (col. 3), the identification number (col. 4), the packing group (col. 5), and the total quantity covered by the description [Title 49, CFR, 172.202(a)]. Consumer fireworks should be described as follows: Fireworks, 1.4G, UN 0336, PG II x lb or kg. Display fireworks should be described as Fireworks, 1.3G, UN 0335, PG II x lb or kg. In addition, the shipper shall certify that the shipment is properly classified, marked and labeled [Title 49, CFR, 172.204(a)]. [†]

Note: EX numbers shall also appear on shipping papers unless they are marked on each shipping carton.

C.5.7 Special Packaging Provisions for Transportation in a Motor Vehicle by Private Carrier.

C.5.7.1 Fireworks articles such as large set pieces, that are too large to be readily placed into fiberboard cartons, shall be permitted to be transported without external packaging to a display site provided that the articles are securely attached to the inside walls of the vehicle by means of wire, wood, or rope and provided that all fuse is protected against accidental ignition by means of a paper covering or paper end cap. All other packages in the vehicle shall be secured to prevent accidental movement and contact with the unpackaged articles. [†]

C.5.7.2 Fusees (highway flares) for use in a fireworks display shall be permitted to be transported in a motor vehicle with fireworks, provided that the flares are properly packaged in accordance with Title 49, CFR. [†]

C.5.7.3 Display fireworks remaining unfired at the conclusion of a display shall be permitted to be repacked in the certified packaging used to bring the fireworks to the display site. The maximum gross weight (printed as part of the box certification marking) authorized for a fiberboard carton shall not be exceeded. The fireworks shall be removed to authorized storage, by means of motor vehicle, as soon as possible following the display. [†]

C.5.7.4 Misfired devices that are to be returned from the display site to the supplier shall be packed separately from unused, unfired devices, and shall be transported only by private motor carrier. [†]

C.5.8 Requirements for an Electric Match (Igniter) Attached to a Display Firework Prior to Transportation.

C.5.8.1 Fireworks with electric matches attached shall only be transported from a fireworks manufacturer's or display operator's facility to a fireworks display site, or to an approved storage for subsequent shipment to a display site. [†]

--`,,```,-`-`,,`,,`,`,,`---

Copyright National Fire Protection Association
Provided by IHS under license with NFPA
No reproduction or networking permitted without license from IHS
Not for Resale

C.5.8.2 The fireworks and the electric matches must be separately approved and assigned EX numbers in accordance with Title 49, CFR, 173.56. [†]

C.5.8.3 Report shells (salutes) that exceed 3 in. in diameter or contain more than 70 g (2.5 oz) of salute powder shall not be transported with electric matches attached. [†]

C.5.8.4 All electric matches that are pre-attached to fireworks for transportation must be certified by the manufacturer to be thermally stable at 150°C for 24 hours. [†]

C.5.8.5 All electric matches that are pre-attached to fireworks for transportation shall be rated by the manufacturer to have a no fire current of not less than 0.20 amperes (*i.e.*, the match does not ignite when tested with a current of less than 0.20 amperes). [†]

C.5.8.6 The electric match shall be securely attached to the fuse or to the lift charge so as to prevent significant movement of the igniter. [†]

C.5.8.7 When the electric match is placed directly into the lift charge of a firework, the electric match shall have a covering (shroud) placed over the match head itself. [†]

C.5.8.8 The leg wires of the electric match shall be shorted (shunted) at all times during transportation. [†]

C.5.8.9 The transportation of any UN0335, Fireworks, 1.3G with attached electric matches by aircraft is prohibited. [†]

C.6 References.

C.6.1 Title 49, CFR, 171-180, DOT. This document can be found online at *www.access.gpo.gov/nara/cfr/waisidx_99/49cfrv2_99.html*. A hard copy may be purchased from: Superintendent of Documents, U.S. Government Printing Office, Washington, DC 20402, or as republished by Bureau of Explosives as Hazardous Materials Regulations of the Department of Transportation, Association of American Railroads, 50 F Street, NW, Washington DC 20001. [†]

C.6.2 Title 16, CFR, 1000 to End, CPSC. This document can be found online at: *www.access.gpo.gov/nara/cfr/waisidx_00/16cfrv2_00.html*. A hard copy may be purchased from the US GPO *(see Section C.6.1 for address)*. Extracts of these regulations pertaining to fireworks only may be purchased from the American Pyrotechnics Association. [†]

Annex D Glossary

This annex is not a part of the requirements of this NFPA document but is included for informational purposes only.

D.1 General. The following terms are not necessarily inclusive of all the terms used in the pyrotechnic special effects industry.

D.1.1 Alternating Current (AC). An electrical current that reverses direction in a circuit at regular intervals and is most frequently supplied from wall outlets or sockets.

D.1.2 Black Match. A fuse made from thread impregnated with Black Powder and used for igniting pyrotechnic devices.

D.1.3 Blank Cartridge. A cartridge constructed from a cartridge case equipped with a percussion primer and filled with various loads of smokeless powder or other propellant. Weapons using blank cartridges often are used in conjunction with bullet hits.

D.1.4 Bridgewire. A fine wire used to fire pyrotechnic devices that either heats up or explodes when an electric current is applied.

D.1.5 Bullet Effect. An effect intended to simulate a slug from a weapon as it strikes a person or object.

D.1.6 Bullet Hit. A small explosive charge attached to a person's clothing or body, or to an inanimate object, to simulate a slug from a weapon as it strikes a person or object.

D.1.7 Color Pot. A tube containing pyrotechnic materials that produces a colored flame when ignited.

D.1.8 Colored Smoke. An aerosol of special dyestuffs of chemical reactants dispersed by pyrotechnic heat or explosion.

D.1.9 Concussion Flashpowder. Flashpowder intended to be used in a concussion mortar to produce a loud, concussive effect.

D.1.10 Concussion Item. A pyrotechnic item that produces a loud noise and a violent jarring shock for dramatic effect.

D.1.11 Concussion Mortar. A device specifically designed and constructed to produce a loud noise and a violent jarring shock for dramatic effect without producing any damage.

D.1.12 Day Box. A portable magazine used for the immediate storage of pyrotechnics.

D.1.13 Deflagration. A rapid chemical reaction in which the output of heat is sufficient to enable the reaction to continue and accelerate without input of heat from another source. Deflagration is primarily a surface phenomenon, with most reaction products flowing away from the unreacted material along the surface at less than supersonic velocity. The effect of a deflagration under confinement is an explosion. Confinement of the reaction increases pressure, rate of reaction, and temperature and, in some cases, can cause transition into a detonation.

D.1.14 Det Cord. A flexible, plastic-covered detonating cord resembling a clothesline that contains a highly explosive material.

D.1.15 Detonation. An extremely rapid chemical reaction in which the pressure generated is sufficient to cause the formation of a shock wave, which causes the reaction to continue. Detonation is a phenomenon with reaction products flowing in the direction of unreacted materials at supersonic velocity. The effect of a detonation with or without confinement is an explosion.

D.1.16 Detonator. A device containing an initiating or primary explosive that is used for initiating detonation including, but not limited to, electric blasting caps (instantaneous and delay types); blasting caps for use with safety fuses; detonating cord delay connectors; and nonelectric caps that use a detonating cord, shock tube, or other replacement for electric legwires; also an explosive or device initiated by a primer and used to initiate another explosive that is less sensitive and larger.

D.1.17 Direct Current (DC). An electrical current that flows in one direction and most frequently supplied by a battery.

D.1.18 Explosion. The rapid production of hot gases at a high pressure as the result of a chemical reaction and the sudden release of the energy to cause strong dynamic stresses in the surroundings. The term usually refers to the effects of a detonation of initiating explosives and high explosives but also applies to the effect of a deflagrating propellant explosive in certain circumstances such as heavy confinement. The term also describes a mechanical phenomenon in which failure of the container results in a sudden release of pressure from within a vessel.

Copyright National Fire Protection Association
Provided by IHS under license with NFPA
No reproduction or networking permitted without license from IHS
Not for Resale

D.1.19 Explosive Special Effect. See D.1.33, *Pyrotechnic Special Effect.*

D.1.20 First Fire. The ignited mixture used with pyrotechnic devices and loaded in direct contact with the main pyrotechnic charge. A pyrotechnic first-fire mixture is compounded to produce a high temperature and hot slag. The mixture is readily ignitible and capable of igniting the underlying pyrotechnic charge.

D.1.21 Flare. A pyrotechnic device designed to produce a single source of intense light for a defined period of time.

D.1.22 Flash Pot. A device used with flashpowder that produces a flash of light and is capable of directing the flash in an upward direction.

D.1.23 Flashpowder. A specific pyrotechnic material in powder form composed of fuel(s) and oxidizer(s). Ignition produces a flash of light, sparkles, an audible report, or a combination of these effects.

D.1.24 Gerb. A cylindrical preload intended to produce a controlled spray of sparks with a reproducible and predictable duration, height, and diameter.

D.1.25 Igniter. An electrical, chemical, or mechanical device normally used to fire pyrotechnics.

D.1.26 Ingredient. A chemical used to create a pyrotechnic material that is not, itself, a pyrotechnic material.

D.1.27 Lift Charge. The composition in a pyrotechnic device that propels (lifts) the effect into the air when ignited. It usually consists of a Black Powder charge.

D.1.28 Lycopodium. The spores produced by the genus of mosses called lycopodium. This powdery, organic, yellow material can be agitated and dispersed mechanically into a cloud and then ignited by a spark, pilot flame, or electrical heating device. Although not a pyrotechnic material, this material is used by special effects operators to produce fire effects or in conjunction with other pyrotechnics to create a special effect.

D.1.29 Mine. A pyrotechnic device, usually a preload, that projects multiple pellets of pyrotechnic material that produce sparks or flame. It is usually supplied with an integral mortar.

D.1.30 Nonelectric Detonator. A detonator that does not need electric energy to function.

D.1.31 Photoflash Flashpowder. A loose pyrotechnic mixture that yields a very large amount of light for a small fraction of a second on exploding.

D.1.32 Pyrotechnic Preload. A pyrotechnic device supplied by the manufacturer in a ready-to-use condition.

D.1.33 Pyrotechnic Special Effect. A special effect created through the use of pyrotechnic materials and devices. *(See also D.1.42, Special Effect.)*

D.1.34 Quick Match. Black match that is encased in a loose-fitting paper sheath. Although exposed black match burns slowly, quick match burns extremely rapidly and almost instantaneously. Quick match is used in fuses for aerial shells and for simultaneous ignition of a number of pyrotechnic devices, such as lances in a ground display piece.

D.1.35 Safety Fuse. A flexible cord containing an internal burning medium by which fire or flame is conveyed at a constant and relatively uniform rate from the point of ignition to the point of use.

D.1.36 Saxon. A pyrotechnic device consisting of a tube that rotates around a pivot point to produce a circular shower of sparks.

D.1.37 Smoke Pot. A pyrotechnic device used to create smoke during a production.

D.1.38 Smokeless Powder. A pyrotechnic material containing nitrocellulose and often nitroglycerin used in small arms ammunition, cannons, rockets, and propellant-actuated power devices.

D.1.39 Soft Detonator. A detonator with a higher velocity than a bullet hit, but with no metallic elements or jacket. It is essentially a blasting cap without a metal jacket.

D.1.40 Sparkle Flashpowder. A flashpowder that produces a bright flash of light and a shower of sparks when ignited.

D.1.41 Sparkle Pot. A pyrotechnic device intended to contain and control the discharge of sparkle flashpowder.

D.1.42 Special Effect. A visual or audible effect used for entertainment purposes, often produced to create an illusion. For example, smoke might be produced to create the impression of fog being present, or a puff of smoke, a flash of light, and a loud sound might be produced to create the impression that a cannon has been fired.

D.1.43 Theatrical Flashpowder. A pyrotechnic material intended for use in theatrical shows that produces a flash of light when ignited. Typical theatrical flashpowders burn more slowly than salute powder and also might produce a shower of sparks. Theatrical flashpowder is not intended to produce a loud report.

D.1.44 Waterfall, Falls, Park Curtain. An effect of a cascade of sparks that usually are produced by multiple devices fired simultaneously.

D.1.45 Wheel. A pyrotechnic device that rotates on a central axis consisting of multiple gerbs or rockets attached to a framework.

Annex E DOT Explosive Materials Transport Regulations

This annex is not a part of the requirements of this NFPA document but is included for informational purposes only.

E.1 General/Introduction. *U.S. Department of Transportation Revisions of Explosive Materials Transport Regulations.*

On December 21, 1990, the U.S. Department of Transportation (U.S. DOT) issued a final rule that revised 49 CFR 171 to 180, "Hazardous Materials Regulations."

These regulations cover the classification, packaging, and shipping of explosives (including blasting agents), oxidizers (ammonium nitrate), flammable liquids, and flammable solids.

Essentially, the U.S. DOT has revised the U.S. hazardous materials regulations so that they conform with international regulations, which are based on the United Nations Recommendations on the Transport of Dangerous Goods. The revised regulations are designed to standardize testing and classification procedures, nomenclature, packaging, labeling, placarding, and handling and to eliminate inconsistencies that currently exist between the U.S. (domestic) and UN (international) standards.

--`,,```,,,,````-`-`,,`,,`,`,,`---
Copyright National Fire Protection Association
Provided by IHS under license with NFPA
No reproduction or networking permitted without license from IHS
Not for Resale

E.2 Classification. The most important change affecting the user of explosive materials was the elimination of Class A, Class B, and Class C explosives and blasting agents. Under the UN recommendations, all explosive materials are Class 1 explosives. Class 1 explosives include six divisions as follows:

(1) Division 1.1 includes explosives that have a mass explosion hazard.
(2) Division 1.2 includes explosives that have a projection hazard but not a mass explosion hazard.
(3) Division 1.3 includes explosives that have a fire hazard and either a minor blast hazard or a minor projection hazard, or both, but not a mass explosion hazard.
(4) Division 1.4 includes explosive devices that contain not more than 25 g (0.9 oz) of a detonating material and present a minor explosion hazard.
(5) Division 1.5 includes very insensitive explosives that have a mass explosion hazard but are so insensitive that there is little probability of initiation or of transition from burning to detonation under normal conditions of transport.
(6) Division 1.6 includes extremely insensitive articles that do not have a mass explosion hazard, and articles that demonstrate a negligible probability of accidental initiation or propagation (no applicable hazard class).

E.2.1 The classification code for an explosive consists of the division number followed by the compatibility group letter. Compatibility group letters designate the controls for the transportation, and storage related thereto, of explosives and are intended to prevent an increase in hazard that might result if certain types of explosives are stored or transported together.

Compatibility groups and classification codes for the various types of explosives are set forth in Table E.2.1(a) and Table E.2.1(b). Table E.2.1(a) sets forth compatibility groups and classification codes for substances and articles described in the first column of the table. Table E.2.1(b) specifies the number of classification codes that are possible within each explosive division. Altogether, there are 35 possible classification codes for explosives.

E.2.2 For comparative purposes, the classification of explosive materials under the UN recommendations and the current U.S. DOT system is provided as follows:

(1) Division 1.1, Class A explosives include dynamite, cast boosters, cap-sensitive emulsions, water gels and slurries, and Class A detonators.
(2) Division 1.2, Class A or Class B explosives are generally ammunition or material that has a projection hazard.
(3) Division 1.3, Class B explosives are generally propellants or explosives that have a fire hazard but not a mass detonation hazard.
(4) Division 1.4, Class C explosives include Class C detonators, safety fuses, and other Class C explosives.
(5) Division 1.5 is comprised of blasting agents that include ammonium nitrate/fuel oil, noncap-sensitive emulsions, water gels, slurries, and packaged blasting agents.
(6) Division 1.6 has no compatibility group designation, since, currently, no commercial explosives exist in Division 1.6.

E.3 UN Classification System. In the UN system, oxidizers and organic peroxides form Class 5. For example, ammonium nitrate, an oxidizer, is classified as 5.1 (Class 5, Division 1). Flammable and combustible liquids (fuel oils) are Class 3, and flammable solids are Class 4.

To determine the proper classification of an explosive, criteria (class and division) and test procedures have been set up in the UN recommendations. The criteria and testing initially determine whether a material is an explosive, and subsequently the hazard division for the material is determined.

In addition to the class and division number, every explosive under the UN recommendations has a proper shipping name and a four-digit identification number. Under this regulation, shipping cases are required to show the proper shipping name and the identification number.

The UN Recommendations on the Shipment of Dangerous Goods became effective October 1, 1991.

Annex F Sample Ordinance Adopting NFPA 1124

This annex is not a part of the requirements of this NFPA document but is included for informational purposes only.

F.1 The following sample ordinance is provided to assist a jurisdiction in the adoption of this [*code, standard*] and is not part of this [*code, standard*].

ORDINANCE NO. _____

An ordinance of the *[jurisdiction]* adopting the *[year]* edition of NFPA *[document number], [complete document title],* and documents listed in Chapter 2 of that [*code, standard*]; prescribing regulations governing conditions hazardous to life and property from fire or explosion; providing for the issuance of permits and collection of fees; repealing Ordinance No. _____ of the *[jurisdiction]* and all other ordinances and parts of ordinances in conflict therewith; providing a penalty; providing a severability clause; and providing for publication; and providing an effective date.

BE IT ORDAINED BY THE *[governing body]* OF THE *[jurisdiction]*:

SECTION 1 That the *[complete document title]* and documents adopted by Chapter 2, three (3) copies of which are on file and are open to inspection by the public in the office of the *[jurisdiction's keeper of records]* of the *[jurisdiction]*, are hereby adopted and incorporated into this ordinance as fully as if set out at length herein, and from the date on which this ordinance shall take effect, the provisions thereof shall be controlling within the limits of the *[jurisdiction]*. The same are hereby adopted as the [*code, standard*] of the *[jurisdiction]* for the purpose of prescribing regulations governing conditions hazardous to life and property from fire or explosion and providing for issuance of permits and collection of fees.

SECTION 2 Any person who shall violate any provision of this *[code, standard]* hereby adopted or fail to comply therewith; or who shall violate or fail to comply with any order made thereunder; or who shall build in violation of any detailed statement of specifications or plans submitted and approved thereunder; or fail to operate in accordance with any certificate or permit issued thereunder; and from which no appeal has been taken; or who shall fail to comply with such an order as affirmed or modified by a court of competent jurisdiction, within the time fixed herein, shall severally for each and every such violation and noncompliance, respectively, be guilty of a misdemeanor, punishable by a fine of not less than $ _____ nor more than $_____ or by imprisonment for not less than _____ days nor more than _____ days or by both such fine and imprisonment. The imposition of one penalty for any violation shall not excuse the violation or permit it to continue; and all such persons shall be required to correct or remedy such violations or defects within a reasonable time; and when not otherwise specified the application of the above penalty shall not be held to prevent the enforced removal of prohibited conditions. Each day that prohibited conditions are maintained shall constitute a separate offense.

Copyright National Fire Protection Association
Provided by IHS under license with NFPA
No reproduction or networking permitted without license from IHS
Not for Resale

Table E.2.1(a) Classification Codes

Substance or Article to be Classified	Compatibility Group	Classification Code
Primary explosive substance	A	1.1A
Article containing a primary explosive substance and not containing two or more effective protective features	B	1.1B, 1.2B, 1.4B
Propellant explosive substance or other deflagrating explosive substance or article containing such explosive substance	C	1.1C, 1.2C, 1.3C, 1.4C
Secondary detonating explosive substance or Black Powder or article containing a secondary detonating explosive substance, in each case without means of initiation and without a propelling charge; or article containing a primary explosive substance and containing two or more effective protective features	D	1.1D, 1.2D, 1.4D, 1.5D
Article containing a secondary detonating explosive substance, without means of initiation, with a propelling charge (other than one containing flammable liquid or hypergolic liquid)	E	1.1E, 1.2E, 1.4E
Article containing a secondary detonating explosive substance, with its means of initiation, with a propelling charge (other than one containing flammable liquid or hypergolic liquid) or without a propelling charge	F	1.1F, 1.2F, 1.3F, 1.4F
Pyrotechnic substance or article containing a pyrotechnic substance, or article containing both an explosive substance and an illuminating, incendiary, tear-producing or smoke-producing substance (other than a water-activated article or an article containing white phosphorus, phosphide, or flammable liquid or gel, or hypergolic liquid)	G	1.1G, 1.2G, 1.3G, 1.4G
Article containing both an explosive substance and white phosphorus	H	1.2H, 1.3H, 1.1J, 1.2J
Article containing both an explosive substance and flammable liquid or gel	J	1.3J
Article containing both an explosive substance and a toxic chemical agent	K	1.2K, 1.3K, 1.1L, 1.2L
Explosive substance or article containing an explosive substance and presenting a special risk (e.g., due to water activation or presence of hypergolic liquids, phosphides, or pyrophoric substances) that requires isolation of each type	L	1.3L
Article containing only extremely insensitive detonating substances	N	1.6N
Substance or article so packed or designed that any hazardous effects arising from accidental functioning are limited to the extent that they do not significantly hinder or prohibit fire fighting or other emergency response efforts in the immediate vicinity of the package	S	1.4S

Table E.2.1(b) Scheme of Classification of Explosives, Combination of Hazard Division with Compatibility Group

	Compatibility Group												
Hazard Division	**A**	**B**	**C**	**D**	**E**	**F**	**G**	**H**	**J**	**K**	**L**	**N**	**S**
1.1	1.1A	1.1B	1.1C	1.1D	1.1E	1.1F	1.1G		1.1J		1.1L		
1.2		1.2B	1.2C	1.2D	1.2E	1.2F	1.2G	1.2H	1.2J	1.2K	1.2L		
1.3			1.3C			1.3F	1.3G	1.3H	1.3J	1.3K	1.3L		
1.4		1.4B	1.4C	1.4D	1.4E	1.4F	1.4G						1.4S
1.5				1.5D									
1.6												1.6N	

--`,,```,,-`-`,,`,,`,`,,`---
Copyright National Fire Protection Association
Provided by IHS under license with NFPA
No reproduction or networking permitted without license from IHS
Not for Resale

SECTION 3 Additions, insertions, and changes ¾ that the *[year]* edition of NFPA *[document number]*, *[complete document title]* is amended and changed in the following respects:

List Amendments

SECTION 4 That ordinance No. _____ of *[jurisdiction]* entitled *[fill in the title of the ordinance or ordinances in effect at the present time]* and all other ordinances or parts of ordinances in conflict herewith are hereby repealed.

SECTION 5 That if any section, subsection, sentence, clause, or phrase of this ordinance is, for any reason, held to be invalid or unconstitutional, such decision shall not affect the validity or constitutionality of the remaining portions of this ordinance. The *[governing body]* hereby declares that it would have passed this ordinance, and each section, subsection, clause, or phrase hereof, irrespective of the fact that any one or more sections, subsections, sentences, clauses, and phrases be declared unconstitutional.

SECTION 6 That the *[jurisdiction's keeper of records]* is hereby ordered and directed to cause this ordinance to be published.

[NOTE: An additional provision may be required to direct the number of times the ordinance is to be published and to specify that it is to be in a newspaper in general circulation. Posting may also be required.]

SECTION 7 That this ordinance and the rules, regulations, provisions, requirements, orders, and matters established and adopted hereby shall take effect and be in full force and effect *[time period]* from and after the date of its final passage and adoption.

Annex G Informational References

G.1 Referenced Publications. The documents or portions thereof listed in this annex are referenced within the informational sections of this code and are not part of the requirements of this document unless also listed in Chapter 2 for other reasons.

G.1.1 NFPA Publications. National Fire Protection Association, 1 Batterymarch Park, Quincy, MA 02169-7471.

NFPA 1, *Uniform Fire Code*™, 2006 edition.

NFPA 13, *Standard for the Installation of Sprinkler Systems*, 2002 edition.

NFPA 30, *Flammable and Combustible Liquids Code*, 2003 edition.

NFPA 99, *Standard for Health Care Facilities*, 2002 edition.

NFPA *101*®, *Life Safety Code*®, 2006 edition.

NFPA 102, *Standard for Grandstands, Folding and Telescopic Seating, Tents, and Membrane Structures*, 1995 edition.

NFPA 1122, *Code for Model Rocketry*, 2002 edition.

NFPA 1127, *Code for High Power Rocketry*, 2002 edition.

NFPA 5000®, *Building Construction and Safety Code*®, 2006 edition.

NFPA *Fire Protection Guide to Hazardous Materials*, 13th edition, 2002.

G.1.2 Other Publications.

G.1.2.1 APA Publication. American Pyrotechnics Association, P.O. Box 30438, Bethesda, MD 21620.

APA 87-1, *Standard for Construction and Approval for Transportation of Fireworks, Novelties, and Theatrical Pyrotechnics*, 2001 edition.

G.1.2.2 Association of American Railroads Publication. Association of American Railroads, Library Room 5800, 50 F Street, NW, Washington, DC 20001.

"Hazardous Materials Regulations of the Department of Transportation."

G.1.2.3 U.S. Government Publications. U.S. Government Printing Office, Washington, DC 20402.

Title 16, *Code of Federal Regulations*, Parts 1000 to End.

Title 18, *United States Code*, Chapter 40, "Importation, Manufacture, Distribution, and Storage of Explosive Materials," 1970.

Title 29, *Code of Federal Regulations*, Part 1910.

Title 29, *Code of Federal Regulations*, 1910.119, Process Safety Management Standard.

Title 49, *Code of Federal Regulations*, Parts 170 to End.

United Nations Recommendations on the Transport of Dangerous Goods.

G.2 Informational References. (Reserved)

G.3 References for Extracts in Informational Sections.

NFPA *101*®, *Life Safety Code*®, 2006 edition.

NFPA 1123, *Code for Fireworks Display*, 2006 edition.

NFPA 5000®, *Building Construction and Safety Code*®, 2006 edition.

Copyright National Fire Protection Association
Provided by IHS under license with NFPA
No reproduction or networking permitted without license from IHS
Not for Resale

Annex H Cross-Reference Table for Chapter 7 Reorganization

Table H.1 Chapter 7 Cross-Reference from the 2006 Edition to the 2003 Edition

Topic	2006 Edition	2003 Edition
Applicability	7.1	7.1
	7.1.1	7.1.1
New	7.1.1.1	New
Existing	7.1.1	7.1.1 New
	7.1.1.2	New
Minimum Requirements	7.1.1.3	New
Modernization or Renovation	7.1.1.4	New
Facility Classification	7.1.2	7.1.2
Consumer Fireworks	7.2.1	7.2.2
	7.2.2	7.1.5
	7.2.3	7.2.6
Display Fireworks and Pyrotechnic Articles	7.2.4	7.2.1
Prohibited	7.2.5	7.2.3
Pest Control Devices	7.2.6	7.2.4
Noncomplying Fireworks	7.2.7	7.2.5
General Requirements for All Retail Sales	**7.3**	**7.2**
Exempt Amounts	7.3.1	7.1.3
	7.3.1.1	7.1.3.1
	7.3.1.2	7.1.3.2
Permits	7.3.2	7.3.1
Plans	7.3.3	7.3.2, 7.3.2.2
Fire Department Access	7.3.4	7.6.1
Construction of Buildings and Structures	7.3.5	7.4.1
Portable Fire Extinguishers	7.3.8	7.5.2
Specifications	7.3.8.1	7.5.2.1
Extinguisher Type	7.3.8.2	7.5.2.2.2
Location	7.3.8.3	7.5.2.3.1
Fire Alarms	7.3.9	7.5.3.1
No Smoking Signs	7.3.11	7.6.5
	7.3.11.1	7.6.5.1
	7.3.11.2	7.6.5.2
Distance from Bulk Dispensing and Bulk Storage	7.3.12	7.7.3
	7.3.12.1	7.7.3.1
	7.3.12.2	New
	7.3.12.3	New
	7.3.12.4	7.7.3.3
	7.3.12.5	7.7.3.4
	7.3.12.6	7.7.3.2
Fire Safety and Evacuation Plan	7.3.13	7.8.2.1
Means of Egress	7.3.14	7.8.1, 7.8.1.1
Number of Exits	7.3.14.1	7.8.3
	7.3.14.1.1	7.8.3.1
	7.3.14.1.2	New
Egress Travel Distance	7.3.14.2	7.8.4.1
Aisles	7.3.14.3	7.8.5
Aisle Width	7.3.14.3.1	7.8.5.1.1
	7.3.14.3.1.1, 7.3.14.3.1.2	7.8.5.1.2
Aisle Arrangements	7.3.14.3.2	7.8.5.3
	7.3.14.3.2.1	7.8.5.3.1
	7.3.14.3.2.2	7.8.5.3.2
	7.3.14.3.2.3	7.8.5.3.3
	7.3.14.3.2.4	7.8.5.3.4
	7.3.14.3.2.5	7.8.5.3.5

(continues)

Copyright National Fire Protection Association
Provided by IHS under license with NFPA
No reproduction or networking permitted without license from IHS
Not for Resale

Table H.1 *Continued*

Topic	2006 Edition	2003 Edition
	7.3.14.3.2.6	7.8.5.3.6
	7.3.14.3.2.7	7.8.5.3.7
Doors and Doorways	7.3.14.4	7.8.6
	7.3.14.4.1	7.8.6.1
	7.3.14.4.2	7.8.6.4
	7.3.14.4.3	7.8.6.5
Exit Signs	7.3.14.5	7.9.1
	7.3.14.5.1	7.9.1.1
	7.3.14.5.2	7.9.1.2
Emergency Lighting	7.3.14.6	7.9.2
	7.3.14.6.1	7.9.2.1
	7.3.14.6.2	7.9.2.2
Retail Sales Display	7.3.15	7.10
General	7.3.15.1	7.10.1
Height of Storage Display	7.3.15.2	7.10.2
	7.3.15.2.1	7.10.2.1
	7.3.15.2.2	7.10.2.2
Flame Breaks	7.3.15.3	7.10.3
	7.3.15.3.1	7.10.3.1
	7.3.15.3.2	7.10.3.3
	7.3.15.3.3	7.10.3.4
	7.3.15.3.4	7.10.3.5
	7.3.15.3.5	7.10.3.6
	7.3.15.3.6	7.10.3.7
	7.3.15.3.7	7.10.3.7.2
	7.3.15.3.8	7.10.3.7.3
Shelving	7.3.15.4	7.10.3.8
	7.3.15.4.1	7.10.3.8.1
	7.3.15.4.2	7.10.3.8.2
	7.3.15.4.3	7.10.3.9
Covered Fuses	7.3.15.5	New
	7.3.15.5.1	7.10.4
	7.3.15.5.2	7.10.4.1
Aerial Devices	7.3.15.6	7.10.6
Horizontal Barriers	7.3.15.7	7.10.7
Electrical Equipment	7.3.16	7.11.1
Heating Equipment	7.3.17	7.11.2
	7.3.17.1	7.11.2.1
	7.3.17.2	7.11.2.2
	7.3.17.3	7.11.2.3
Portable Generator	7.3.18.1	7.11.3.3
	7.3.18.2	7.11.3.4
Operations	7.3.19	7.12
General	7.3.19.1	7.12.1.1
Distance to Entrances and Exits	7.3.19.2	7.12.2
	7.3.19.2.1	7.12.2.1
	7.3.19.2.2	7.12.2.2
Security	7.3.19.3	7.12.3
	7.3.19.3.1	7.12.3.1
	7.3.19.3.2	7.12.3.2
	7.3.19.4	7.6.4.1
Display and Handling	7.3.20	7.12.4.3
Housekeeping	7.3.21	7.12.5
	7.3.21.1	7.12.5.1
	7.3.21.2	7.12.5.2
	7.3.21.3	7.12.5.3
	7.3.21.4	7.12.5.4
	7.3.21.5	7.12.5.5
	7.3.21.6	7.12.5.6

Copyright National Fire Protection Association
Provided by IHS under license with NFPA
No reproduction or networking permitted without license from IHS
Not for Resale

Table H.1 *Continued*

Topic	2006 Edition	2003 Edition
Training	7.3.22	7.12.6
Under the Influence	7.3.23	7.12.7
Records	7.3.24	7.13
	7.3.24.1	7.13.1
	7.3.24.2	7.13.2
Consumer Fireworks Retail Sales (CFRS) Facility Requirements	**7.4**	**New**
Permit (Plans)	7.4.1	7.3.2.1
Site Plan	7.4.2	7.3.2.3
Construction Materials	7.4.3	7.4.2
Multiple-Tenant Buildings	7.4.4	7.4.3
	7.4.4.1	7.4.3.1
	7.4.4.2	7.4.3.2
	7.4.4.3	New
Fire Protection	7.4.5	7.5
Automatic Sprinkler System	7.4.5.1	7.5.1.2
Portable Fire Extinguishers	7.4.5.2	7.5.2
Public Notification	7.4.5.3	7.5.3.2
Site Requirements	7.4.6	7.6
Clearance to Combustibles	7.4.6.1	7.6.2
Parking	7.4.6.2	7.6.3
Fireworks Discharge	7.4.6.3	7.6.4
Separation Distances	7.4.7	7.7
Permanent Facilities	7.4.7.1	7.7.1
New Facilities	7.4.7.1.1 (and table)	7.7.1.1 (and Table)
Existing Facilities	7.4.7.1.2	7.7.1.2
Temporary Facilities	7.4.7.2 (and table)	7.7.2 (and table)
Other Separation Distances	7.3.12	7.7.3
	7.3.12.1	7.7.3.1
	7.3.12.2	New
	7.3.12.3	New
	(deleted)	7.7.3.3
Means of Egress	7.4.8	7.8
General	7.4.8.1	7.8.1
(Evacuation Plan)	7.4.8.2	7.8.2.1, 7.8.2.2
(Exit Signs)	7.4.8.3	7.9.1, 7.9.1.1, 7.9.1.2
(Emergency Lighting)	7.4.8.4	7.9.2.1, 7.9.2.2
Source of Ignition	7.4.9	New
	7.4.9.1	7.11.1.1
	7.4.9.1.1	7.11.1.2
	7.4.9.1.2	7.11.1.3
Portable Generator	7.4.9.2	7.11.3
	7.4.9.2.1	7.11.3.1
	7.4.9.2.2	7.11.3.2
	7.4.9.2.3	7.11.3.5
	7.4.9.2.4	7.11.3.6
Cooking Equipment	7.4.9.3	7.11.4
	7.4.9.3.1	7.11.4.1
	7.4.9.3.2	7.11.4.2
Quantity Limitations	7.4.10	7.12.4.2
Flame Breaks	7.4.11	7.10.3.7.1
Stores	**7.5**	**New**
General	7.5.1	New
	7.5.1.1	7.1.4
Sales in Stores	7.5.1.2	7.10.5
Egress	7.5.2	New
	(deleted)	7.8.1.1
	(deleted)	7.8.3.2

(continues)

Copyright National Fire Protection Association
Provided by IHS under license with NFPA
No reproduction or networking permitted without license from IHS
Not for Resale

Table H.1 ***Continued***

Topic	2006 Edition	2003 Edition
Other Separation Distances	(deleted)	7.7.3
	(deleted)	7.7.3.1
	(deleted)	New
	(deleted)	7.6.4.1
Storage Rooms	7.5.3	7.4.4
	7.5.3.1	7.4.4.1
	7.5.3.2	7.4.4.2
Notification	7.5.4	7.5.3.2
	(deleted)	7.5.1.2
Smoke Control	(deleted)	7.5.4
	(deleted)	7.5.4.1
	(deleted)	7.5.4.2
Stands	**7.6**	**New**
Site Plan	7.6.1	7.3.2.3
Egress	7.6.2.3	7.8.4.2
Temporary Stands	**7.6.2**	**New**
Portable Fire Extinguisher	7.6.2.1	7.5.2.2.1
Fire Safety and Evacuation Plan	7.6.2.2	7.8.2.3
Means of Egress	7.6.2.3	New
	7.6.2.3.1	7.8.3.2
Egress Travel Distance	7.6.2.3.2	7.8.4.2
	7.6.2.3.3	7.12.1.2
Stands Not Accessible to the Public	**7.6.4**	**New**
Minimum Clear Width of Aisles	7.6.4.1	7.8.5.2
Egress Doors	7.6.4.2.1	7.8.6.3
	7.6.4.2.2	7.8.6.4
Storage	7.6.4.3	7.10.2.3
Flame Breaks	7.6.4.4	7.10.3.10
Covered Fuses	7.6.4.5	7.10.4.2
Sales Display	7.6.4.6	7.12.4.1

Copyright National Fire Protection Association
Provided by IHS under license with NFPA
No reproduction or networking permitted without license from IHS
Not for Resale

Index

© 2005 National Fire Protection Association. All Rights Reserved.

The copyright in this index is separate and distinct from the copyright in the document that it indexes. The licensing provisions set forth for the document are not applicable to this index. This index may not be reproduced in whole or in part by any means without the express written permission of NFPA.

-A-

Access, fire department 6.6, 7.3.4, A.6.6, A.7.3.4
Access to plant, restricted ..... 4.4.2; *see also* Site security
Adoption of code, sample ordinance ..... Annex F
Aerial devices 4.14.5, C.3.1.2, C.3.6.2.8
  Retail sales display ..... 7.3.15.6, 7.5.1.2(4), A.7.3.15.6
Aerial salutes (definition) ..... 3.3.67.1; *see also* Aerial shells; Salutes
Aerial shells ..... 4.14.1, 4.14.5.1 to 4.14.5.4, A.4.14.5.2, C.4.1.1
  Construction C.4.2
  Definition 3.3.1, A.3.3.1
Aerial shells, reloadable type C.3.1.2.6
Airburst (definition) 3.3.2
Aisles
  Consumer fireworks retail sales facilities 7.3.14.3, 7.3.19.1, 7.3.20, 7.6.4.1, A.7.3.14.3.2
  Storage facilities 6.8.4, 6.13.3, 6.14.3
Alarm systems
  Fire alarms, consumer fireworks retail sales facility 7.3.9
    Public notification, means of 7.4.5.3, 7.5.4
  Waterflow alarm 6.5.1.2, 7.4.5.1
Alternating current (AC) (definition) D.1.1
Application of standard 1.3, C.1.6
Approvals, DOT .....*see* DOT (Department of Transportation, U.S.)
Approved (definition) 3.2.1, A.3.2.1
Area .....*see* Consumer fireworks retail sales areas; Consumer fireworks storage buildings, work areas in; Consumer fireworks works building, room, or area; Process areas
Articles, pyrotechnic .....*see* Pyrotechnic articles
Artificial barricades 4.6.4.5
  Definition 3.3.5.1
Audible ground devices ..... 7.5.1.2(4), C.3.1.3
Authority having jurisdiction (definition) 3.2.2, A.3.2.2

-B-

Barricades 4.6.1.1, 4.6.4.5
  Artificial 4.6.4.5
    Definition 3.3.5.1
  Definition 3.3.5
  Natural (definition) 3.3.5.2
  Screen 4.5.5.2, 4.6.1.2
    Definition 3.3.5.3, A.3.3.5.3
    Separation distances and 4.6.3.1, A.4.6.3.1
  Separation distances and 4.6.3.1, A.4.6.3.1
Barriers, horizontal 7.3.15.7, A.7.3.15.7
Basements, process buildings 4.5.1.1
Bases, fireworks C.3.6.2.1
Binary materials .....*see* Binary systems
Binary systems
  Definition 3.3.7, A.3.3.7
  Marking and labeling 4.14.4.4, 4.14.4.5
Bins, storage in open 5.7.8
Black matches .....*see* Matches
Black powder
  Definition 3.3.54.1
  Loose, in storage buildings 6.12.1
  Storage of ..... 5.1.1, 5.1.1.2(3), 5.1.4, 6.12.1; *see also* Magazines
Blank cartridges (definition) D.1.3
Blowouts (definition) C.2.3
Bonding, electrical equipment 4.5.3.4.2
Bottle rockets C.3.1.2.1
Bridgewires (definition) D.1.4
Buildings .....*see also* Consumer fireworks storage buildings; Consumer fireworks works building, room, or area; Inhabited buildings; Nonprocess buildings; Process buildings; Shipping buildings; Storage buildings; Stores (buildings)
  Mechanical (definition) 3.3.9.4, A.3.3.9.4
  Mixing 4.5.2.2, 4.5.4.1
    Definition 3.3.9.5, A.3.3.9.5
  Unoccupied 4.6.7.4
    Definition 3.3.9.10, A.3.3.9.10
Bulk dispensing and storage, consumer fireworks retail sales facility distance from 7.3.12
Bulk salute powder
  Definition 3.3.54.3.1
  Storage of 4.6.4.4, 4.6.4.6, 5.1.1.1
Bulk salutes
  Definition 3.3.67.2
  Storage of 4.6.4.4, 4.6.4.6, 5.1.1.1
Bullet effect (definition) D.1.5
Bullet hit (definition) D.1.6
Bullet-resistant construction 5.3.1, 5.3.2.2
Bullet-sensitive explosive materials ..... 5.1.1.2(1)
  Definition 3.3.39.2, A.3.3.39.2
Burnout (definition) C.2.4
Burst charge (definition) C.2.5

-C-

Ceilings, finish 6.4.4
Chasers C.3.1.3.2
Chemical composition (definition) C.2.6
Chemicals
  Prohibited C.3.7.1
  Standard fireworks chemicals ..... C.4.3.1, Table C.4.3.1
Clothing, protective 4.9.4
Code (definition) 3.2.3, A.3.2.3
Colored smoke (definition) D.1.7
Color pot (definition) D.1.8
Combination items C.4.4
Comets 4.14.5.1
  Definition 3.3.13, A.3.3.13
Common fireworks .....*see* Consumer fireworks
Components, prohibited C.3.7.2
Concussion flashpowder (definition) D.1.9
Concussion items (definition) D.1.10
Concussion mortars (definition) D.1.11
Conductive materials 4.5.2.2, 4.5.2.3
Cone fountains C.3.1.1.2
Construction of fireworks
  Aerial shells C.4.2
  Components of fireworks devices C.3.6.2
Construction of structures
  Bullet-resistant 5.3.1, 5.3.2.2
  Consumer fireworks retail sales facilities 7.3.5, 7.3.6.1, 7.3.6.2, 7.4.3, 7.4.4, 7.5.3
  Consumer fireworks storage buildings 6.4
  Magazines ..... 5.2, 5.3, Annex B
  Manufacturing plants 4.5
  Multiple-use buildings 6.4.3, 7.4.4
  Process buildings 4.5.1
Consumer fireworks
  Definition 3.3.30.1, 6.1.6, A.3.3.30.1, A.6.1.6, C.2.7.1
  Manufacturing operations .....*see* Manufacturing operations

Copyright National Fire Protection Association
Provided by IHS under license with NFPA
No reproduction or networking permitted without license from IHS
Not for Resale

Operations 6.11, A.6.11.4, A.6.11.7
Retail sales .....*see* Retail sales (sale to public)
Separation distances ..... 4.6.2.6, 4.6.3(6), Table 4.6.3, 4.6.3.2, 4.6.6, 4.6.9.1, 6.7, 6.13.5.1, 6.14.6, 7.3.12, A.6.7.1
Storage .....*see* Storage
Transportation of .....*see* Transportation of fireworks
Types of C.3
Consumer fireworks retail sales areas
Definition 3.3.3.1
Display and handling of fireworks in 7.3.20, 7.4.10
Exits ..... 7.3.14.1 to 7.3.14.3, A.7.3.14.3.2
Horizontal barriers, use of 7.3.15.7, A.7.3.15.7
Separation from bulk storage/dispensing areas 7.3.12.6
Consumer fireworks retail sales facilities (CFRS facilities) ..... Chap. 7; *see also* Consumer fireworks storage buildings
Classification of facilities 7.1.2
Construction of structures .....*see* Construction of structures
Definition 3.3.29.1
Displays of fireworks 7.3.15, 7.3.20, A.7.3.15
Equipment 7.3.17.2, 7.3.17.5, 7.4.9, A.7.4.9.2.4
Existing facilities ..... 7.1.1.2, 7.4.7.1.2, Table A.7.1.1
Fire protection .....*see* Fire protection
Fireworks discharge in vicinity of 7.3.18.4, 7.4.6.3
General requirements 7.1.1, 7.3, A.7.1.1, A.7.3.2, A.7.3.13
Means of egress .....*see* Means of egress
Minimum requirements 7.1.1.3
Modernization or renovation 7.1.1.4
Multiple-tenant buildings 7.4.4
New facilities ..... 7.1.1.1, 7.4.7.1.1, 7.5.3, Table A.7.1.1
Operations 7.3.19
Plans 7.3.3, 7.4.1, 7.4.2
Separation distances 7.3.12, 7.4.7, 7.6.3
Special limits 7.2, A.7.2.2
Specific requirements 7.4, A.7.4.8.1.1, A.7.4.9.2.4
Temporary 7.3.5, 7.6.2, 7.6.4
Emergency lighting 7.4.8.4
Equipment in 7.3.17.2, 7.3.17.5, 7.4.9, A.7.4.9.2.4
Exit signs 7.4.8.3
Extinguishers, portable fire 7.4.5.2, 7.6.2.1
Means of egress ..... 7.3.14.2, 7.4.8.1.1, 7.4.8.3 to 7.4.8.5, 7.6.2.3, 7.6.4.2.1, A.7.4.8.1.1
Plan 7.4.2, 7.6.2.2
Separation distances 7.3.12.2, 7.4.7.2, 7.6.3
Consumer fireworks retail sales stands ..... Chap. 7
Definition 3.3.19, A.3.3.19
Not open to public 7.6.4
Site plans 7.6.1
Specific requirements 7.6
Temporary 7.6.2, 7.6.4
Consumer fireworks storage buildings ..... Chap. 6
Definition 3.3.9.1, A.3.3.9.1
Operations in 6.11, A.6.11.7
Separation distances ..... Table 4.6.3, 4.6.3(6), 4.6.3.2, Table 4.6.4.1, 4.6.6, 6.7, A.6.7.1
Work areas in ..... 6.1.2(1)(b), 6.2.2
Consumer fireworks work building, room, or area ..... Chap. 6
Definition 3.3.9.2, A.3.3.9.2
Conveyors, nonferrous 5.4.8.1
Cooking equipment 7.4.9.3
Covered fuses 7.3.15.5, 7.6.4.5
Definition 3.3.22, A.3.3.22
Custom fireworks ..... 4.1.2(1)
Cylindrical fountains C.3.1.1.1

-D-

Day box (definition) D.1.12
Definitions ..... Chap. 3, C.2, Annex D
Deflagration (definition) D.1.13
Department of Transportation, U.S. .....*see* DOT (Department of Transportation, U.S.)
Det cords (definition) D.1.14
Detonation (definition) D.1.15
Detonators (definition) D.1.16
Dipped sticks C.3.2.5
Direct current (DC) (definition) D.1.17
Display fireworks 4.1.3, 4.14.3
Approval, DOT C.4.3
Definition 3.3.30.2, A.3.3.30.2, C.2.7.2
Manufacturing operations .....*see* Manufacturing operations
Marking 4.14.5.2, A.4.15.5.2
Requirements for C.4
Retail sales 7.2.4
Separation distances 4.6.2.2, 4.6.2.3, 4.6.3.3, 4.6.3.4, 4.6.4
Shipping buildings .....*see* Shipping buildings
Storage
In magazines .....*see* Magazines
In shipping buildings 5.6.3, 5.6.6, 5.7.5, A.5.6.3
Transfer from process buildings to magazines 4.8, A.4.8.2
Transportation of .....*see* Transportation of fireworks
Types of C.4.1
Distribution facilities 6.11.1, 6.11.2
Definition 3.3.29.2
Doors
Consumer fireworks retails sales facilities 7.3.6.1, 7.3.14.4, 7.3.18.1
Stands 7.6.4.2.1
Storage rooms, store 7.5.3.1
Storage and work buildings 6.4.3.2.1, 6.8.3, 6.11.3
Temporary storage 6.14.5
DOT (Department of Transportation, U.S.)
Approvals C.1.3, C.5.2
Consumer fireworks, novelties, and theatrical pyrotechnics C.3.9
Definition C.2.1
Display fireworks C.4.3
DOT-approved packaging ..... 6.5.1.1, 6.11.4(1), C.1.3, C.5.3
Definition 3.3.25, A.3.3.25
Explosive Materials Transport Regulations ..... C.1.3, C.5.1, Annex E
Dust
Accumulation of 4.5.1.3
Sealing to prevent entry of 4.5.1.2

-E-

Egress, means of .....*see* Means of egress
Electrical equipment and systems
Consumer fireworks retail sales facilities 7.3.16, 7.4.9.1
Magazines 5.2.2, 5.2.3
Manufacturing operations 4.5.3
Master disconnect 4.10.3
Shipping buildings 5.6.5
Storage buildings 6.10, A.6.10
Electricity, static 4.5.4
Electric matches 5.7.5
Definition 3.3.26, C.2.8
Emergency lighting 4.10.3.3, 6.9.2, 7.3.14.6, 7.6.2.3.6
Emergency plans 4.10.2, 6.11.7, 7.6.2.2, A.6.11.7
Employees
Consumer fireworks retail sales 7.3.22, A.7.3.22
Training ..... 4.10.2.3 to 4.10.2.5, 4.13, 7.3.22, A.6.11.7, A.7.3.22
Enforcement of code ..... 1.6, Annex F
Equivalency to standard 1.5
Evacuation 4.10.2.5, 7.3.13, 7.4.8.2, 7.6.2.2, A.7.3.13, A.7.3.15.2
Exits .....*see* Means of egress
Explosion (definition) D.1.18
Explosion prevention ..... 4.9, A.4.9.2.3 to A.4.9.6
Explosion relief 4.5.5, A.4.5.5.1
Explosive composition ..... 4.1.2(2), 4.1.2(3)
Accumulations, avoidance of 4.5.2.1

--`,,```,,-`-`,,`,,`,`,,`---
Copyright National Fire Protection Association
Provided by IHS under license with NFPA
No reproduction or networking permitted without license from IHS
Not for Resale

Clothing contaminated by 4.9.2.5, 4.9.4.4
Definition 3.3.15.1, C.2.6.1
Fire spread to 4.10.2.5
Handling, safety training for 4.13.2
Heating and electrical equipment in area of 4.5.3.3, 4.5.3.4.2
Magazine storage of .....*see* Magazines
Maximum quantity limitations 4.7, 4.12.2
Separation distances 4.6.7.2, 4.6.8.2
Spills 4.9.1.2
Storage, in shipping buildings 5.7.6, 5.7.7
Testing 4.11.1, 6.11.5.2
Explosive devices
Prohibited 7.2.5, C.3.7.3
In shipping buildings 5.7.8
Explosive powders and mixtures, dry 4.8, A.4.8.2
Explosives (explosive materials) ..... 4.1.2(1)
Definition 3.3.27, A.3.3.27
Deteriorated 5.4.10
Heating and electrical equipment in area of ..... 4.5.3.4.1, 5.2.2.4(9)
Removal from magazine of ..... 5.4.11 to 5.4.13
Removal or theft of 4.3.3
Storage of .....*see* Magazines
Testing 4.11.3
Transportation of ..... Chap. 8
Waste 4.9.1.4, 4.9.1.7
Explosive special effects .....*see* Pyrotechnic special effects
Extinguishers, portable fire ... 4.9.2.4(3), 4.10.1, 4.10.2.4, 6.3.2.2(3)
Consumer fireworks retail sales facilities ..... 7.3.3(3), 7.3.6.3, 7.3.8, 7.4.5.2, 7.6.2.1
Consumer fireworks storage 6.5.2, 6.14.4

-F-

Falls (waterfalls) (definition) D.1.44
Fences 4.4.2.2, 4.4.3
Ferrous metal, use of 4.9.6, 5.2.1.3, 5.2.4.2, 5.4.8.1, 5.4.8.2, A.4.9.6
Firearms ..... 5.5.1(5), 6.11.5
Firecrackers C.3.1.3.1
Fire department access 6.6, 7.3.4, A.6.6, A.7.3.4
Fire prevention ..... 4.9, 5.4.6 to 5.4.13, 6.11.5, 6.12, A.4.9.2.3 to A.4.9.6
Fire protection .....*see also* Sprinkler systems
Consumer fireworks retail sales facilities ..... 7.3.6 to 7.3.8, A.7.5.1.1
Consumer fireworks retail sales facilities (CFRS facilities) .... 7.3.6 to 7.3.8, 7.4.5.2, 7.6.2.1, A.7.5.1.1
Consumer fireworks storage 6.5, 6.14.4, A.6.5.1
Manufacturing operations 4.10
Fireworks
Construction C.3.6.2, C.4.2
Consumer .....*see* Consumer fireworks
Definition 3.3.30, A.3.3.30, C.2.7
Discharge near consumer fireworks sales facilities 7.3.19.4, 7.4.6.3
Display .....*see* Display fireworks
Fuses C.3.5.1
Manufacturing operations .....*see* Manufacturing operations
Regulation of ..... C.1.3 to C.1.5, C.5
Storage .....*see* Storage
Testing 4.11, 6.11.5.2, A.4.11
Transportation of ..... Chap. 8, Annex C
Fireworks plants .....*see* Manufacturing facilities
First fire (definition) D.1.20
Flame breaks 7.3.15.3, 7.4.11, 7.5.5, 7.6.4.4, A.7.3.15.3
Definition 3.3.31
Flammable liquids or gases ..... 4.5.3.1, 6.3.2.2(1), 6.7.3.1, 6.7.3.2, 7.3.3(1), 7.3.12, 7.3.17.3.4, 7.3.17.5, 7.4.9.2.3, 7.4.9.2.4, A.7.4.9.2.4
Flares (definition) D.1.21
Flash pots (definition) D.1.22
Flashpowder (definition) ..... D.1.23; *see also* Salute powder
Flitter sparklers C.3.1.1.6
Floors 4.5.2, 5.3.1, 5.3.2.3, 5.4.9, A.4.5.2
Fountains ..... 4.14.4.1(2), C.3.1.1.1, C.3.1.1.2
Fusees 5.7.5
Fuses ..... 4.1.3, 5.7.5, C.3.6.1; *see also* Safety fuses
Aerial shells ..... C.4.2.4 to C.4.2.6
Covered 7.3.15.5, 7.6.4.5
Definition 3.3.22, A.3.3.22

-G-

Gates 4.4.2.1
Generators, portable 7.3.17.5, 7.4.9.2, A.7.4.9.2.4
Gerbs ..... 4.14.4.1(2)
Definition D.1.24
Ground devices
Audible ..... 7.5.1.2(4), C.3.1.3
Sparkling and smoke C.3.1.1
Grounding, electrical ..... 4.5.3.4.2, 5.2.2.4(5)
Ground salutes 4.14.3
Definition 3.3.67.3
Ground spinners C.3.1.1.5

-H-

Handles, fireworks C.3.6.2.3
Heating equipment
Consumer fireworks retail sales facilities 7.3.17
Magazines 5.2.2
Manufacturing operations 4.5.3
Heat vents 6.5.3, 7.3.10
Helicopters, aerial spinner C.3.1.2.3
Highways
Definition 3.3.33
Separation distances ..... 4.6.3(3), Table 4.6.3, 4.6.4.1, Table 4.6.4.1, 4.6.5, 4.6.6, Table 4.6.6, 5.1.2, 5.1.4, 5.6.2
Horizontal barriers 7.3.15.7, A.7.3.15.7
Housekeeping 4.9.1, 5.4.9, 5.7.11, 5.7.12, 6.12, 7.3.21, 7.4.6.1, A.7.3.21

-I-

Igniters 5.7.5
Definition D.1.26
Illuminating torch C.3.1.1.3
Indoor use, articles suited for ..... 4.14.4.1 to 4.14.4.5
Ingredients (definition) D.1.26
Inhabited buildings
Definition 3.3.9.3, A.3.3.9.3
Separation distances ... 4.6.3(1), Table 4.6.3, 4.6.4.1, Table 4.6.4.1, 4.6.5, 4.6.6, Table 4.6.6, 5.1.2, 5.1.4, 5.6.2
Interior finishes 6.4.4

-L-

Labeled (definition) ..... 3.2.4; *see also* Marking and labeling
Laboratories, pyrotechnic .....*see* Pyrotechnic laboratories
Licenses 4.2
Lift charges (definition) C.2.10, D.1.27
Lighting equipment ..... 6.13.6; *see also* Emergency lighting
Magazines 5.2.3
Manufacturing operations 4.5.3
Limited-combustible material ..... 6.4.2(2)(a), 7.4.3(2)(a)
Definition 3.3.39.3
Listed (definition) 3.2.5, A.3.2.5
Lycopodium (definition) D.1.28

-M-

Magazines ..... 4.1.2(3), 5.1 to 5.5, 5.6.2
Bulk salutes and bulk salute powder, storage of 5.1.1.1

--`,,```,,-`-`,,`,,`,`,,`---

Copyright National Fire Protection Association
Provided by IHS under license with NFPA
No reproduction or networking permitted without license from IHS
Not for Resale

Construction ..... 5.2, 5.3, Annex B
Consumer fireworks in ..... 6.1.4, 6.4.1(3)
Definition 3.3.36
Indoor 5.3.2.4, 5.3.4.2
Maximum occupant and quantity limitations 4.12, A.4.12.1
Outdoor 5.3.2.3, 5.3.4.1
Quantity tables 4.6.4
Safety procedures 5.5
Separation distances ..... 4.6.3(4), Table 4.6.3, 4.6.3.2, 4.6.4, 4.6.5, 4.6.8
Storage within, procedures for ..... 5.4, A.5.4.2 to A.5.4.5
Transfer of materials to 4.8, A.4.8.2
Type 1 ..... 5.1.1.1, 5.1.1.2, 5.3.1
Type 2 ..... 4.6.4.3, 5.1.1.1, 5.1.1.2, 5.3.2
Type 3 ..... 5.3.3
Type 4 ..... 4.6.4.3, 5.1.1.2, 5.3.4
Manufacturing (definition) 3.3.37, A.3.3.37
Manufacturing facilities
Definition 3.3.29.3, A.3.3.29.3
Magazines ..... *see* Magazines
Manufacturing operations ..... *see* Manufacturing operations
Storage of consumer fireworks at ..... Chap. 6
Manufacturing operations ..... Chap. 4
Construction of structures 4.5
Emergency plans 4.10.2
Fire and explosion prevention ..... 4.9, A.4.9.2.3 to A.4.9.6
Fire protection 4.10
Heating, lighting, and electrical equipment 4.5.3
Means of egress 4.5.6
Occupancies 4.12, A.4.12.1
Permit requirements 4.2
Recordkeeping and reporting 4.3
Separation distances 4.6, A.4.6.3.1, A.4.8.2
Site security ..... *see* Site security
Testing of fireworks 4.11, A.4.11
Transfer of materials 4.8, A.4.8.2
Marking and labeling
Aerial shells 4.14.5.5, C.4.2.3
Binary systems 4.14.4.4, 4.14.4.5
Consumer fireworks C.3.10
Definitions
Labeling C.2.9
Marking C.2.11
Display fireworks 4.14.5.2, A.4.15.5.2
Packages C.5.5
Pyrotechnic articles ..... 4.14.4.1 to 4.14.4.3
Tested fireworks 6.2.7, A.6.2.7
Matches ..... 4.1.3(5), 5.5.1(2), 6.11.5.1.1
Black 5.7.5, C.4.2.5
Definition C.2.2, D.1.2
Electric 3.3.26, 5.7.5
Quick 5.7.5, C.4.2.4
Definition C.2.14, D.1.34
Material
Binary ..... *see* Binary systems
Bullet-sensitive explosive ..... *see* Bullet-sensitive explosive materials
Limited-combustible (definition) ..... *see* Limited-combustible material
Noncombustible ..... *see* Noncombustible material
Pyrotechnic ..... *see* Pyrotechnic materials
Means of egress
Consumer fireworks retail sales facilities ... 7.3.13, 7.3.14, 7.3.19.1, 7.3.19.2, 7.4.8, 7.5.1.2(4), 7.5.2, 7.6.2.3, A.7.3.13, A.7.3.14.3.2, A.7.4.8.1.1
Consumer fireworks retail sales facilities (CFRS facilities) 7.3.14.2
Consumer fireworks storage ..... 6.3.2.2(5), 6.8, 6.9, 6.13.4, 6.13.5.2, 6.14.5, 7.3.3(5)
Manufacturing operations 4.5.6
Mechanical building (definition) 3.3.9.4, A.3.3.9.4
Mercantile occupancies
Definition 3.3.41, A.3.3.41
Life safety requirements 7.2.3
Sales limited to 7.2.2, A.7.2.2
Mines
Definition 3.3.42, A.3.3.42, D.1.29
Shell 4.14.5.1, C.3.1.2.5
Missile-type rockets C.3.1.2.2
Mixing buildings 4.5.2.2, 4.5.4.1
Definition 3.3.9.5, A.3.3.9.5
Motor vehicles
Definition 3.3.44
Transportation of fireworks in ..... Chap. 8
Multiple tube fireworks devices 4.14.5.6, C.3.5
Multiple-use buildings, construction of 6.4.3, 7.4.4

-N-

Natural barricades (definition) 3.3.5.2
Noncombustible material ..... 6.4.2(2)(a), 7.4.3(2)(a)
Definition 3.3.39.4
Noncomplying fireworks 7.2.7
Nonelectric detonators (definition) D.1.30
Nonprocess buildings ..... *see also* Pyrotechnic laboratories
Definition 3.3.9.6, A.3.3.9.6
Separation distances 4.6.2.1, 4.6.7.1
Novelties
Approval C.3.9
Definition 3.3.48, A.3.3.48, C.2.12
Prohibited components C.3.7.2
Regulation C.1.4
Requirements C.3
Types C.3.2

-O-

Occupants, number of 4.12, A.4.12.1
Open flames ..... 5.5.1(3), 6.11.5.1.1, 7.3.17.3, 7.4.9.3.2
Oxidizers 4.9.5, A.4.9.5
Definition 3.3.49, A.3.3.49

-P-

Packaged fireworks merchandise ..... 7.3.15.3.3, 7.3.15.3.5, 7.3.15.3.7, 7.3.15.4.2(2), 7.3.15.4.3, 7.3.15.5.2, 7.3.15.6, 7.5.1.2, 7.6.4.6(2), A.7.3.15.3.3, A.7.3.15.6, A.7.5.1.2(3); *see also* Covered fuses
Definition 3.3.50, A.3.3.50
Packaging ..... 4.1.3, 6.11.1, 6.11.2, 6.11.4, A.6.11.4; *see also* Packaged fireworks merchandise
DOT-approved packaging ..... *see* DOT
Marking and labeling C.5.5
Park curtains (waterfalls) (definition) D.1.44
Party poppers C.3.2.1
Permanent (definition) 3.3.51
Permit requirements 4.2, 6.3, 7.3.2, A.7.3.2
Persons; ..... *see also* Employees
Definition 3.3.52
Permit requirements 4.2.1
Pest control devices 7.2.6
Definition 3.3.53
Photoflash flashpowder (definition) D.1.31
Placards C.5.4
Definition C.2.13
Plans
Fire safety, emergency, and evacuation 4.10.2, 6.11.7, 7.3.13, 7.6.2.2, A.6.11.7, A.7.3.13
Site/facility
Consumer fireworks retail sales facilities 7.3.3, 7.4.1, 7.4.2, 7.6.1
Consumer fireworks storage or work buildings 6.3.2
Preloads, pyrotechnic ..... 4.14.4.1(2)
Definition D.1.32
Process areas 4.11.2
Definition 3.3.3.2

Copyright National Fire Protection Association
Provided by IHS under license with NFPA
No reproduction or networking permitted without license from IHS
Not for Resale

Quantities of explosive/pyrotechnic materials allowed in 4.7
Separation distances 4.6.2, 4.6.3, A.4.6.3.1
Process buildings
Construction 4.5.1
Consumer fireworks in 6.1.5
Definition 3.3.9.7, A.3.3.9.7
Electrical installations 4.5.3.4
Explosion relief 4.5.5.1, A.4.5.5.1
Maximum occupant and quantity limitations ... 4.7, 4.12, A.4.12.1
Means of egress 4.5.6.2
Separation distances 4.6.2, 4.6.3, 4.6.7.1, 4.6.8.3, 4.6.9.1, A.4.6.3.1
Shipping building used as 5.7.4
Smoking materials in vicinity of 4.9.2.1
Transfer of materials from 4.8, A.4.8.2
Prohibited chemicals and components ..... C.3.7, Table C.3.7.1
Protective clothing 4.9.4
Public conveyances (definition) 3.3.57
Purpose of standard 1.2
Pyrotechnic articles ..... 4.1.2(1), 4.1.3
Definition 3.3.58, 6.1.6, A.6.1.6
Marking and labeling ..... 4.14.4.1 to 4.14.4.3
Retail sales 7.2.4
Storage
In magazines .....*see* Magazines
In shipping buildings 5.7.5
Testing 4.11, A.4.11
Transportation of ..... Chap. 8
Pyrotechnic chambers C.3.6.2.5
Pyrotechnic composition ..... 4.1.2(2), 4.1.2(3)
Accumulations, avoidance of 4.5.2.1
Clothing contaminated by 4.9.2.5, 4.9.4.4
Consumer fireworks, retail sales of 7.3.1.1, 7.3.1.2
Definition 3.3.15.2, C.2.6.2
Fire spread to 4.10.2.5
Handling, safety training for 4.13.2
Heating and electrical equipment in area of 4.5.3.3, 4.5.3.4.2
Loose
In magazines 4.6.4
In process buildings or areas ..... 4.6.2.6(2)
In retail sales and storage areas 7.3.21.2, 7.3.21.4
In shipping buildings 5.7.7
In storage buildings 6.12.1, 6.12.2
Magazine storage of .....*see* Magazines
Maximum quantity limitations 4.7, 4.12.2
Separation distances 4.6.4, 4.6.7.2, 4.6.8.2, 4.6.9.3
Spills 4.9.1.2
Storage, in shipping buildings ..... 5.7.5 to 5.7.7
Testing 4.11.1, 6.11.5.2
Pyrotechnic laboratories
Definition 3.3.60, A.3.3.60
Separation distances 4.6.9
Pyrotechnic materials
(pyrotechnic special effects materials) ..... 4.1.2(1)
Definition 3.3.39.5, A.3.3.39.5
Deteriorated 5.4.10
Heating and electrical equipment in area of 4.5.3.4.1
Removal from magazine of ..... 5.4.11 to 5.4.13
Storage, in shipping buildings 5.7.5, 5.7.8
Testing 4.11.1, 4.11.3, 6.11.5.2
Transportation of ..... Chap. 8
Waste 4.9.1.4, 4.9.1.7
Pyrotechnic preloads ..... 4.14.4.1(2)
Definition D.1.32
Pyrotechnics 5.7.5
Definition 3.3.63
Pyrotechnic special effects ..... 5.7.5; *see also* Pyrotechnic materials (pyrotechnic special effects materials)
Definition 3.3.62, D.1.33

-Q-

Quick matches .....*see* Matches

-R-

Railways
Definition 3.3.64
Separation distances ..... 4.6.3(2), Table 4.6.3, 4.6.4.1, Table 4.6.4.1, 4.6.5, 4.6.6, Table 4.6.6, 5.1.2, 5.1.4, 5.6.2
Recordkeeping and reporting 4.3, 7.3.24
References ..... Chap. 2, C.6, Annex G
Retail sales (sale to public) ..... Chap. 7; *see also* Consumer fireworks retail sales facilities (CFRS facilities)
Definition 3.3.65
Exempt amounts 7.3.1
General requirements 7.3, A.7.3.2, A.7.3.13
Marking and labeling requirements C.1.4, C.3.10
To persons under the influence of drugs or alcohol 7.3.23
Prohibited chemicals and components C.3.7
Special limits 7.2, A.7.2.2
U.S. Consumer Product Safety Commission regulations C.1.4, C.3
Retroactivity of standard 1.4
Rockets C.3.1.2.1, C.3.1.2.2
Definition 3.3.66
Sticks on C.3.6.2.2
Wings on C.3.6.2.6
Roman candles 4.14.5.6, C.3.1.2.4, C.3.5.1.2

-S-

Safety caps 4.14.2, C.4.2.6
Safety fuses C.3.6.1.1
Definition C.2.15, D.1.35
Safety officer 4.13
Safety precautions 5.5
Salute powder .....*see also* Bulk salute powder
Definition 3.3.54.3
Separation distances for 4.6.2.4, 4.6.2.5, 4.6.3.5, 4.6.3.6, 4.6.5, 4.6.9.3, A.4.7
Storage .....*see* Magazines
Salutes ..... C.4.1.2; *see also* Bulk salutes
Aerial ..... 4.14.5.3 to 4.14.5.5
Definition 3.3.67, 3.3.67.1
Ground 4.14.3
Separation distances for 4.6.4.6, 4.6.5, 5.6.4
Saxons (definition) D.1.36
Scope of standard 1.1
Screen barricades .....*see* Barricades
Security, site .....*see* Site security
Separation distances
Consumer fireworks retail sales facilities 7.3.12, 7.4.7, 7.6.3
Consumer fireworks storage 6.7, 6.13.5.1, 6.14.6, A.6.7.1
Groups of buildings 4.6.7, 4.6.8
Magazines .....*see* Magazines
Manufacturing operations 4.6, A.4.6.3.1, A.4.8.2
Shipping buildings ..... 5.6.1 to 5.6.4, 5.7.1 to 5.7.3, A.5.6.3
Shall (definition) 3.2.6
Shelving, consumer fireworks retail sales display 7.3.15.4
Shipping buildings 5.7, A.5.7.9
Definition 3.3.9.8
For display fireworks 5.6, A.5.6.3
Separation distances ..... 4.6.3(5), Table 4.6.3, Table 4.6.4.1, 4.6.4.2, 5.6.1 to 5.6.4, 5.7.1 to 5.7.3, A.5.6.3
Shipping papers C.5.6
Should (definition) 3.2.7
Signs
Exit 6.9.1, 7.3.14.5, 7.6.2.3.4
Warning ..... 4.4.3, 5.3.2.4(3), 6.11.6, 7.3.11, 7.4.6.3.1
Site security 5.7.13
Consumer fireworks retail sales facilities 7.3.19.3, 7.6.4.2.2
Consumer fireworks storage 6.11.3

--`,,```,,-`-`,,`,,`,`,,`---

Copyright National Fire Protection Association
Provided by IHS under license with NFPA
No reproduction or networking permitted without license from IHS
Not for Resale

Manufacturing operations ..... 4.4, 5.3.1(8) to (12), 5.3.2.3(6) to (8), 5.3.2.4(2), 5.3.3(1), 5.3.4.1(4)
Shipping buildings 5.6.6
Sky rockets C.3.1.2.1
Smoke, colored (definition) D.1.7
Smoke control 7.3.10
Smoke detection system 7.3.10.2
Smoke devices C.3.1.1, C.3.6.2.9
Smokeless powder (definition) D.1.38
Smoke pots (definition) D.1.37
Smoke vents 6.5.3, 7.3.10
Smoking/smoking materials ... 4.4.3, 4.9.2, 5.5.1(1), 6.11.5.1, 6.11.6, 7.3.11, A.4.9.2.3
Snakes, glow worm C.3.2.4
Snappers C.3.2.2
Soft detonators (definition) D.1.39
Sparkle flashpowder (definition) D.1.40
Sparkle pots (definition) D.1.41
Sparkling devices, ground and hand-held C.3.1.1, C.3.2.5
Special effects (definition) D.1.42
Special fireworks .....*see* Display fireworks
Spikes, fireworks C.3.6.2.4
Sprinkler systems
Consumer fireworks retail sales facilities and stores 7.3.1.1, 7.3.6, 7.4.4.2, 7.4.5.1, 7.5.3, 7.5.5, A.7.5.1.1
Consumer fireworks storage 6.1.3, 6.5.1, 7.3.7, 7.5.3, A.6.5.1
Stars
Definition 3.3.72, A.3.3.72, C.2.16
Separation distances for ..... 4.6.2.6(2), 4.6.4
Static electricity 4.5.4
Sticks, fireworks C.3.6.2.2
Storage .....*see also* Magazines; Storage buildings
Bulk storage, consumer fireworks retail sales facility distance from 7.3.12
Consumer fireworks ..... Chap. 6; *see also* Consumer fireworks storage buildings; Storage buildings
In building used for other purposes 6.4.3
At consumer fireworks retail sales facilities 7.2.1, 7.3.7, 7.3.12.6, 7.3.19.3.2, 7.4.6.2, 7.5.3, 7.6.4.3, A.6.1.1
In shipping buildings 5.7.5
Temporary facilities ... 6.1.2(2), 6.4.1(4), 6.8.2, 6.14, 7.3.19.3.2, 7.4.6.2, 7.6.4.3
Display fireworks, pyrotechnic articles, salute powder, pyrotechnic and explosive compositions, and Black Powder ..... Chap. 5
Generator fuel 7.4.9.2.3, 7.4.9.2.4, A.7.4.9.2.4
Storage buildings .....*see also* Consumer fireworks storage buildings
Definition 3.3.9.9
Separation distances ..... 4.6.3(6), Table 4.6.3, 4.6.3.2, Table 4.6.4.1, 4.6.6, 4.6.8.3
Stores (buildings) ... Chap. 7; *see also* Consumer fireworks retail sales facilities (CFRS facilities)
Definition 3.3.74, 7.5.1.1, A.3.3.74
Flame breaks 7.5.5
Specific requirements for ..... 7.5, A.7.5.1.1, A.7.5.1.2(3)
Substance abuse 4.9.3, 7.3.23

-T-

Temporary
Consumer fireworks retail sales facilities ...*see* Consumer fireworks retail sales facilities
Definition 3.3.75
Storage facilities .....*see* Storage
Testing of fireworks 4.11, 6.11.5.2, A.4.11
Third party testing 6.2.7, A.6.2.7
Theatrical flashpowder (definition) D.1.43
Theatrical pyrotechnics
Approval C.3.9
Definition C.3.2.17
Requirements for C.3
Third party testing 6.2.7, A.6.2.7
Tools
Ferrous metal 4.9.6, 5.4.8.1, 5.4.8.2, A.4.9.6
Nonsparking ..... 5.4.7, 5.7.10, 6.12.2(2), 7.3.21.4, A.4.9.6
Shipping buildings, use in 5.7.9, 5.7.10, A.5.7.9
Toy caps C.3.2.3
Toy smoke devices C.3.1.1.7, C.3.2.3
Training, employees ..... 4.10.2.3 to 4.10.2.5, 4.13
Transfer of materials, manufacturing operations 4.8, A.4.8.2
Transportation of fireworks .... Chap. 8, Annex C; *see also* Consumer fireworks retail sales stands
DOT approval and classification for C.3.9
Parking 7.4.6.2

-U-

Unoccupied building 4.6.7.4
Definition 3.3.9.10, A.3.3.9.10
Use of code 1.3.2

-V-

Vehicles .....*see* Motor vehicles
Ventilation 5.2.4, 5.3.1, 5.3.2.1
Vents
Explosion 4.5.5, A.4.5.5.1
Smoke and heat 6.5.3, 7.3.10

-W-

Walls, finish 6.4.4
Waterfalls (definition) D.1.44
Wheels C.3.1.1.4, C.3.6.2.7
Definition D.1.45
Whistle composition (definition) 3.3.15.3
Wings, fireworks C.3.6.2.6
Wire sparklers C.3.2.5
Work surfaces 4.5.2

Copyright National Fire Protection Association
Provided by IHS under license with NFPA
No reproduction or networking permitted without license from IHS
Not for Resale

Sequence of Events Leading to Publication of an NFPA Committee Document

Call goes out for proposals to amend existing document or for recommendations on new document.

▼

Committee meets to act on proposals, to develop its own proposals, and to prepare its report.

▼

Committee votes on proposals by letter ballot. If two-thirds approve, report goes forward. Lacking two-thirds approval, report returns to committee.

▼

Report — *Report on Proposals* (ROP) — is published for public review and comment.

▼

Committee meets to act on each public comment received.

▼

Committee votes on comments by letter ballot. If two-thirds approve, supplementary report goes forward. Lacking two-thirds approval, supplementary report returns to committee.

▼

Supplementary report — *Report on Comments* (ROC) — is published for public review.

▼

NFPA membership meets (Annual or Fall Meeting) and acts on committee report (ROP or ROC).

▼

Committee votes on any amendments to report approved at NFPA Annual or Fall Meeting.

▼

Appeals to Standards Council on Association action must be filed within 20 days of the NFPA Annual or Fall Meeting.

▼

Standards Council decides, based on all evidence, whether or not to issue standard or to take other action, including upholding any appeals.

Committee Membership Classifications

The following classifications apply to Technical Committee members and represent their principal interest in the activity of the committee.

M *Manufacturer:* A representative of a maker or marketer of a product, assembly, or system, or portion thereof, that is affected by the standard.

U *User:* A representative of an entity that is subject to the provisions of the standard or that voluntarily uses the standard.

I/M *Installer/Maintainer:* A representative of an entity that is in the business of installing or maintaining a product, assembly, or system affected by the standard.

L *Labor:* A labor representative or employee concerned with safety in the workplace.

R/T *Applied Research/Testing Laboratory:* A representative of an independent testing laboratory or independent applied research organization that promulgates and/or enforces standards.

E *Enforcing Authority:* A representative of an agency or an organization that promulgates and/or enforces standards.

I *Insurance:* A representative of an insurance company, broker, agent, bureau, or inspection agency.

C *Consumer:* A person who is, or represents, the ultimate purchaser of a product, system, or service affected by the standard, but who is not included in the *User* classification.

SE *Special Expert:* A person not representing any of the previous classifications, but who has a special expertise in the scope of the standard or portion thereof.

NOTES:

1. "Standard" connotes code, standard, recommended practice, or guide.
2. A representative includes an employee.
3. While these classifications will be used by the Standards Council to achieve a balance for Technical Committees, the Standards Council may determine that new classifications of members or unique interests need representation in order to foster the best possible committee deliberations on any project. In this connection, the Standards Council may make such appointments as it seems appropriate in the public interest, such as the classification of "Utilities" in the National Electrical Code Committee.
4. Representatives of subsidiaries of any group are generally considered to have the same classification as the parent organization.

Copyright National Fire Protection Association
Provided by IHS under license with NFPA
No reproduction or networking permitted without license from IHS
Not for Resale

NFPA Technical Committee Document Proposal Form

Note: All proposals must be received by 5:00 p.m. EST/EDST on the published proposal closing date.

For further information on the standards-making process, please contact Codes and Standards Administration at 617-984-7249. For technical assistance, please call NFPA at 617-770-3000.

FOR OFFICE USE ONLY
Log #: _____
Date Rec'd: _____

Please indicate in which format you wish to receive your ROP/ROC: ☐ **CD ROM** ☐ **paper** ☐ **download**
(Note: In choosing the download option you intend to view the ROP/ROC from our Website. No copy will be sent to you.)

Date 12/18/02 **Name** John B. Smith **Telephone** 617-555-1212
Company _____
Address 9 Seattle St. **City** Seattle **State** WA **Zip** 02255
Please indicate organization represented (if any) Fire Marshals Assn. of North America

1. **a) NFPA Document Title** National Fire Alarm Code
   b) NFPA No. & Edition NFPA 72, 2002 ed. **c) Section/Paragraph** 4.4.7.1.1
2. **Proposal Recommends:** *(check one)* ☐ **new text** ☐ **revised text** ☒ **deleted text**
3. **Proposal.** *(Include proposed new or revised wording, or identification of wording to be deleted.)* Note: Proposed text should be in legislative format, that is, use underscore to denote wording to be inserted (inserted wording) and strike-through to denote wording to be deleted (~~deleted wording~~). Delete exception.
4. **Statement of Problem and Substantiation for Proposal.** Note: State the problem that will be resolved by your recommendation. Give the specific reason for your proposal including copies of tests, research papers, fire experience, etc. If more than 200 words, it may be abstracted for publication. A properly installed and maintained system should be free of ground faults. The occurrence of one or more ground faults should be required to cause a "trouble" signal because it indicates a condition that could contribute to future malfunction of the system. Ground fault protection has been widely available on these systems for years and its cost is negligible. Requiring it on all systems will promote better installations, maintenance and reliability.
5. ☒ **This Proposal is Original Material.** Note: Original material is considered to be the submitter's own idea based on or as a result of his/her own experience, thought, or research and, to the best of his/her knowledge, is not copied from another source.

   ☐ **This Proposal is Not Original Material; Its Source** ***(if known)*** **is as Follows:** _____

Sample

I hereby grant the NFPA all and full rights in copyright to this proposal, and I understand that I acquire no rights in any publication of NFPA in which this proposal in this or another similar or analogous form is used.

Signature ***(Required)*** John B. Smith

PLEASE USE SEPARATE FORM FOR EACH PROPOSAL • NFPA FAX (617) 770-3500

Mail to: Secretary, Standards Council • NFPA • 1 Batterymarch Park • PO Box 9101 • Quincy, MA 02269-9101

Copyright National Fire Protection Association
Provided by IHS under license with NFPA
No reproduction or networking permitted without license from IHS
Not for Resale

NFPA Technical Committee Document Proposal Form

Note: All proposals must be received by 5:00 p.m. EST/EDST on the published proposal closing date.

For further information on the standards-making process, please contact Codes and Standards Administration at 617-984-7249. For technical assistance, please call NFPA at 617-770-3000.

FOR OFFICE USE ONLY
Log #: _____
Date Rec'd: _____

Please indicate in which format you wish to receive your ROP/ROC: ☐ **CD ROM** ☐ **paper** ☐ **download**
(Note: In choosing the download option you intend to view the ROP/ROC from our Website. No copy will be sent to you.)

Date _____ **Name** _____ **Telephone** _____
Company _____
Address _____ **City** _____ **State** _____ **Zip** _____
Please indicate organization represented (if any) _____

1. **a) NFPA Document Title** _____
   b) NFPA No. & Edition _____ **c) Section/Paragraph** _____

2. **Proposal Recommends:** *(check one)* ☐ **new text** ☐ **revised text** ☐ **deleted text**

3. **Proposal.** *(Include proposed new or revised wording, or identification of wording to be deleted.)* Note: Proposed text should be in legislative format, that is, use underscore to denote wording to be inserted (inserted wording) and strike-through to denote wording to be deleted (~~deleted wording~~). _____

4. **Statement of Problem and Substantiation for Proposal.** Note: State the problem that will be resolved by your recommendation. Give the specific reason for your proposal including copies of tests, research papers, fire experience, etc. If more than 200 words, it may be abstracted for publication. _____

5. ☐ **This Proposal is Original Material.** Note: Original material is considered to be the submitter's own idea based on or as a result of his/her own experience, thought, or research and, to the best of his/her knowledge, is not copied from another source.

   ☐ **This Proposal is Not Original Material; Its Source *(if known)* is as Follows:** _____

I hereby grant the NFPA all and full rights in copyright to this proposal, and I understand that I acquire no rights in any publication of NFPA in which this proposal in this or another similar or analogous form is used.

Signature *(Required)* _____

PLEASE USE SEPARATE FORM FOR EACH PROPOSAL • NFPA FAX (617) 770-3500

Mail to: Secretary, Standards Council • NFPA • 1 Batterymarch Park • PO Box 9101 • Quincy, MA 02269-9101

Copyright National Fire Protection Association
Provided by IHS under license with NFPA
No reproduction or networking permitted without license from IHS
Not for Resale