NFPA 110

Standard for Emergency and Standby Power Systems

2005 Edition



NFPA, 1 Batterymarch Park, Quincy, MA 02169-7471
An International Codes and Standards Organization

--`,,,```-`-`,,`,,`,`,,`---

Copyright National Fire Protection Association
Provided by IHS under license with NFPA
No reproduction or networking permitted without license from IHS

Not for Resale

IMPORTANT NOTICES AND DISCLAIMERS CONCERNING NFPA DOCUMENTS

NOTICE AND DISCLAIMER OF LIABILITY CONCERNING THE USE OF NFPA DOCUMENTS

NFPA codes, standards, recommended practices, and guides, of which the document contained herein is one, are developed through a consensus standards development process approved by the American National Standards Institute. This process brings together volunteers representing varied viewpoints and interests to achieve consensus on fire and other safety issues. While the NFPA administers the process and establishes rules to promote fairness in the development of consensus, it does not independently test, evaluate, or verify the accuracy of any information or the soundness of any judgments contained in its codes and standards.

The NFPA disclaims liability for any personal injury, property or other damages of any nature whatsoever, whether special, indirect, consequential or compensatory, directly or indirectly resulting from the publication, use of, or reliance on this document. The NFPA also makes no guaranty or warranty as to the accuracy or completeness of any information published herein.

In issuing and making this document available, the NFPA is not undertaking to render professional or other services for or on behalf of any person or entity. Nor is the NFPA undertaking to perform any duty owed by any person or entity to someone else. Anyone using this document should rely on his or her own independent judgment or, as appropriate, seek the advice of a competent professional in determining the exercise of reasonable care in any given circumstances.

The NFPA has no power, nor does it undertake, to police or enforce compliance with the contents of this document. Nor does the NFPA list, certify, test or inspect products, designs, or installations for compliance with this document. Any certification or other statement of compliance with the requirements of this document shall not be attributable to the NFPA and is solely the responsibility of the certifier or maker of the statement.

Copyright National Fire Protection Association
Provided by IHS under license with NFPA
No reproduction or networking permitted without license from IHS
Not for Resale

ADDITIONAL NOTICES AND DISCLAIMERS

Updating of NFPA Documents

Users of NFPA codes, standards, recommended practices, and guides should be aware that these documents may be superseded at any time by the issuance of new editions or may be amended from time to time through the issuance of Tentative Interim Amendments. An official NFPA document at any point in time consists of the current edition of the document together with any Tentative Interim Amendments and any Errata then in effect. In order to determine whether a given document is the current edition and whether it has been amended through the issuance of Tentative Interim Amendments or corrected through the issuance of Errata, consult appropriate NFPA publications such as the National Fire Codes® Subscription Service, visit the NFPA website at www.nfpa.org, or contact the NFPA at the address listed below.

Interpretations of NFPA Documents

A statement, written or oral, that is not processed in accordance with Section 6 of the Regulations Governing Committee Projects shall not be considered the official position of NFPA or any of its Committees and shall not be considered to be, nor be relied upon as, a Formal Interpretation.

Patents

The NFPA does not take any position with respect to the validity of any patent rights asserted in connection with any items which are mentioned in or are the subject of NFPA codes, standards, recommended practices, and guides, and the NFPA disclaims liability for the infringement of any patent resulting from the use of or reliance on these documents. Users of these documents are expressly advised that determination of the validity of any such patent rights, and the risk of infringement of such rights, is entirely their own responsibility.

NFPA adheres to applicable policies of the American National Standards Institute with respect to patents. For further information contact the NFPA at the address listed below.

Law and Regulations

Users of these documents should consult applicable federal, state, and local laws and regulations. NFPA does not, by the publication of its codes, standards, recommended practices, and guides, intend to urge action that is not in compliance with applicable laws, and these documents may not be construed as doing so.

Copyrights

This document is copyrighted by the NFPA. It is made available for a wide variety of both public and private uses. These include both use, by reference, in laws and regulations, and use in private self-regulation, standardization, and the promotion of safe practices and methods. By making this document available for use and adoption by public authorities and private users, the NFPA does not waive any rights in copyright to this document.

Use of NFPA documents for regulatory purposes should be accomplished through adoption by reference. The term "adoption by reference" means the citing of title, edition, and publishing information only. Any deletions, additions, and changes desired by the adopting authority should be noted separately in the adopting instrument. In order to assist NFPA in following the uses made of its documents, adopting authorities are requested to notify the NFPA (Attention: Secretary, Standards Council) in writing of such use. For technical assistance and questions concerning adoption of NFPA documents, contact NFPA at the address below.

For Further Information

All questions or other communications relating to NFPA codes, standards, recommended practices, and guides and all requests for information on NFPA procedures governing its codes and standards development process, including information on the procedures for requesting Formal Interpretations, for proposing Tentative Interim Amendments, and for proposing revisions to NFPA documents during regular revision cycles, should be sent to NFPA headquarters, addressed to the attention of the Secretary, Standards Council, NFPA, 1 Batterymarch Park, P.O. Box 9101, Quincy, MA 02269-9101.

For more information about NFPA, visit the NFPA website at www.nfpa.org.

Copyright National Fire Protection Association
Provided by IHS under license with NFPA
No reproduction or networking permitted without license from IHS
Not for Resale

Copyright © 2005, National Fire Protection Association, All Rights Reserved

NFPA 110

Standard for

Emergency and Standby Power Systems

2005 Edition

This edition of NFPA 110, *Standard for Emergency and Standby Power Systems*, was prepared by the Technical Committee on Emergency Power Supplies and acted on by NFPA at its November Association Technical Meeting held November 13–17, 2004, in Miami Beach, FL. It was issued by the Standards Council on January 14, 2005, with an effective date of February 7, 2005, and supersedes all previous editions.

This edition of NFPA 110 was approved as an American National Standard on February 7, 2005.

Origin and Development of NFPA 110

The Technical Committee on Emergency Power Supplies was organized in 1976 by NFPA in recognition of the demand for viable guidelines for the assembly, installation, and performance of electrical power systems to supply critical and essential needs during outages of the primary power source. It was the intent of the committee to establish the necessary equipment requirements to achieve an on-site auxiliary electrical power source suitable to the needs of the applicable requirements and user criteria.

In 1979, the committee's report proposing adoption of NFPA 110 was published but withdrawn because of issues involving the scope of the committee. In 1981, a revised committee report was returned to committee to resolve differences with other NFPA documents. At the 1982 NFPA Fall Meeting, the committee's report was adopted as a tentative standard (NFPA 110T-1983) in order to expose the document to as much public review as possible. NFPA 110 was formally adopted as a standard at the 1984 NFPA Fall Meeting and designated as the 1985 edition. The 1985 edition clarified scope statements, prototype testing, battery and bypass-isolation switch requirements, and revised maintenance requirements.

The requirements of the standard are considered necessary to obtain the minimum level of reliability and performance, particularly where life safety electrical power needs are involved.

The standard does not require the installation of emergency and standby power supply systems. Rather, it is a document that, if followed, results in a system suitable for various situations as required by other codes and standards.

The 1988 edition of NFPA 110 included several new definitions and further clarified transfer switch and installation testing requirements.

The 1993 edition of NFPA 110 revised the document to reflect (1) the adoption by NFPA of a new document on stored electrical energy emergency and standby power systems (NFPA 111, *Standard on Stored Electrical Energy Emergency and Standby Power Systems*), (2) a basic requirement for one-step loading for all prime movers, (3) an update on battery technology, (4) restrictions on unnecessary transferring of loads, and (5) the need for battery maintenance.

The 1996 edition of NFPA 110 included, but was not limited to, the following changes: monthly load testing requirements for generator sets were changed, including taking into consideration wet stacking; definitions were added for various kinds of fuel tanks; types of fuel tanks and spillage considerations were added; restrictions on the types of batteries that can be used were added; the minimum number of cranks, including time-outs, that an engine must be capable of completing was clarified; cooling system requirements were clarified; working space requirements were added; and the issue of timing devices in health care facilities for testing a generator was clarified.

Copyright National Fire Protection Association
Provided by IHS under license with NFPA
No reproduction or networking permitted without license from IHS
Not for Resale

The 1999 edition was changed by the deletion of the testing of generator sets at 50 percent of the emergency power supply system (EPSS) load because the relevant measure is the nameplate rating. That edition also deleted the exception for wet stacking. Exhaust temperature monitoring was added, because it is an acceptable performance measure of proper emergency power supply (EPS) loading.

The 2002 edition included format and technical revisions. The 2000 edition of the *Manual of Style for NFPA Technical Committee Documents* was applied in this document's restructure and format. Introductory material in Chapter 1 was formatted for consistency among all NFPA documents. Referenced publications that apply to the document were relocated from the last chapter to Chapter 2, resulting in the renumbering of chapters. Informational references remained in the last annex. Appendices were designated as annexes. Definitions in Chapter 3 were reviewed for consistency with definitions in other NFPA documents, systematically aligned, and individually numbered. Paragraph structuring was revised with the intent of one mandatory requirement per section, subsection, or paragraph. Information that often accompanied many of the requirements was moved to Annex A, Explanatory Material. Exceptions were deleted or rephrased in mandatory text, unless the exception represented an allowance or required an alternate procedure to a general rule when limited specified conditions existed. The format appearance and structure provided continuity among NFPA documents, clarity of mandatory text, and greater ease in locating specific mandatory text.

Changes in the 2002 edition of NFPA 110 included definitive and broad-based requirements regarding electrical installations in accordance with NFPA 70, *National Electrical Code®*; additional EPS controls and safeguards, such as alerting staff of impending failure of the EPS to start; access and working space around the generator set; ventilation; energy converters; and EPSS testing requirements.

Changes in the 2005 edition of NFPA 110 include electrical installations in accordance with NFPA 70, *National Electrical Code®*; revised clearance distances between transfer switches and service equipment; revision of the definitions for both lead-acid (flooded) and valve-regulated lead-acid (VRLA) batteries; and changes in the testing and maintenance section to include testing for spark-ignited engines that parallels those for diesel. Changes for the 2005 edition also include new annex material for diesel fuel testing and maintenance procedures, as well as transfer switches.

--`,,,```-`-`,,`,,`,`,,`---

Copyright National Fire Protection Association
Provided by IHS under license with NFPA
No reproduction or networking permitted without license from IHS Not for Resale

Technical Committee on Emergency Power Supplies

Douglas S. Erickson, *Chair*
American Society for Healthcare Engineering, VI [U]
Rep. American Society for Healthcare Engineering

Manuel J. DeLerno, *Secretary*
S-P-D Incorporated, IL [SE]

Ernest E. Allen, Ohio Hospital Insurance Co., OH [I]
Rep. NFPA Health Care Section
Lawrence A. Bey, Cummins West Hawaii Division, HI [M]
Dan Chisholm, Motor and Generator Institute, Inc., FL [IM]
Kenneth A. Cotton, U.S. Energy Systems, Inc., CA [M]
Herbert Daugherty, Electric Generating Systems Association, NJ [M]
Rep. Electrical Generating Systems Association
Dennis DeMoss, Sargent & Lundy, IL [SE]
William H. Everard, Everard Fire Protection Engineering Ltd., VA [SE]
Charles D. Hughes, Westinghouse Savannah River Company, SC [U]
Rep. Institute of Electrical & Electronics Engineers, Inc.
Larry Lau, U.S. Department of Veterans Affairs, DC [U]
Rep. U.S. Department of Veterans Affairs
Alan Manche, Schneider Electric/Square D Company, KY [M]
Ronald Marts, Telcordia Technologies/SAIC, NJ [U]
Stephen W. McCluer, American Power Conversion Corporation, TX [M]
Hugh O. Nash, Jr., Nash Lipsey Burch, LLC, TN [SE]
Daniel J. O'Connor, Schirmer Engineering Corporation, IL [I]
Stan Pukash, ASCO Power Technologies, NJ [M]
David Stymiest, Smith Seckman Reid, Inc., LA [SE]
David E. Watters, H. F. Lenz Company, PA [IM]

Alternates

Raymond J. Battalora, Schirmer Engineering Corporation, TX [I]
(Alt. to D. J. O'Connor)
James R. Iverson, Onan Corporation, MN [M]
(Alt. to L. A. Bey)
Michael S. Shulman, Underwriters Laboratories Inc., CA [RT]
(Voting Alt. to UL Rep.)
Ronald M. Smidt, Carolinas HealthCare System, NC [U]
(Alt. to D. S. Erickson)
Jeffrey L. Steplowski, U.S. Department of Veterans Affairs, DC [U]
(Alt. to L. Lau)
Herbert V. Whittall, Electrical Generating Systems Association, FL [M]
(Alt. to H. Daugherty)

Donald Shields, NFPA Staff Liaison

This list represents the membership at the time the Committee was balloted on the final text of this edition. Since that time, changes in the membership may have occurred. A key to classifications is found at the back of the document.

NOTE: Membership on a committee shall not in and of itself constitute an endorsement of the Association or any document developed by the committee on which the member serves.

Committee Scope: This Committee shall have primary responsibility for documents on performance criteria for the selection and assembly of the components for emergency and standby power systems in buildings and facilities, including categories of power supplies, transfer equipment, controls, supervisory equipment, and all related electrical and mechanical auxiliary or accessory equipment needed to supply emergency or standby power to the utilization equipment. The Committee also shall be responsible for criteria on the maintenance and testing of the system. This Committee does not cover requirements for the application of emergency power systems, self-contained emergency lighting units, and electrical wiring, except for wiring that is an integral part of the system up to the load side of the transfer switch(es).

--`,,```-`-`,,`,,`,`,,`---
Copyright National Fire Protection Association
Provided by IHS under license with NFPA
No reproduction or networking permitted without license from IHS
Not for Resale

Contents

Chapter 1 Administration **110–** 5
1.1 Scope **110–** 5
1.2 Purpose **110–** 5
1.3 Application **110–** 5
1.4 Equivalency **110–** 5

Chapter 2 Referenced Publications **110–** 5
2.1 General **110–** 5
2.2 NFPA Publications **110–** 5
2.3 Other Publications **110–** 5

Chapter 3 Definitions **110–** 5
3.1 General **110–** 5
3.2 NFPA Official Definitions **110–** 5
3.3 General Definitions **110–** 6

Chapter 4 Classification of Emergency Power Supply Systems (EPSSs) **110–** 6
4.1 General **110–** 6
4.2 Class **110–** 6
4.3 Type **110–** 6
4.4 Level **110–** 6

Chapter 5 Emergency Power Supply (EPS): Energy Sources, Converters, and Accessories **110–** 7
5.1 Energy Sources **110–** 7
5.2 Energy Converters — General **110–** 7
5.3 Energy Converters — Temperature **110–** 8
5.4 Energy Converters — Capacity **110–** 8
5.5 Energy Converters — Fuel Supply **110–** 8
5.6 Rotating Equipment **110–** 8

Chapter 6 Transfer Switch Equipment **110–**12
6.1 General **110–**12
6.2 Automatic Transfer Switch Features **110–**12
6.3 Load Switching (Load Shedding) **110–**13
6.4 Bypass-Isolation Switches **110–**13
6.5 Protection **110–**13

Chapter 7 Installation and Environmental Considerations **110–**13
7.1 General **110–**13
7.2 Location **110–**13
7.3 Lighting **110–**14
7.4 Mounting **110–**14
7.5 Vibration **110–**14
7.6 Noise **110–**14
7.7 Heating, Cooling, and Ventilating **110–**14
7.8 Installed EPS Cooling System **110–**15
7.9 Fuel System **110–**15
7.10 Exhaust System **110–**15
7.11 Protection **110–**16
7.12 Distribution **110–**16
7.13 Installation Acceptance **110–**16

Chapter 8 Routine Maintenance and Operational Testing **110–**17
8.1 General **110–**17
8.2 Manuals, Special Tools, and Spare Parts ... **110–**17
8.3 Maintenance and Operational Testing **110–**18
8.4 Operational Inspection and Testing **110–**18

Annex A Explanatory Material **110–**19

Annex B Diagrams of Typical Systems **110–**32

Annex C Informational References **110–**34

Index **110–**35

Copyright National Fire Protection Association
Provided by IHS under license with NFPA
No reproduction or networking permitted without license from IHS
Not for Resale

NFPA 110

Standard for

Emergency and Standby Power Systems

2005 Edition

IMPORTANT NOTE: This NFPA document is made available for use subject to important notices and legal disclaimers. These notices and disclaimers appear in all publications containing this document and may be found under the heading "Important Notices and Disclaimers Concerning NFPA Documents." They can also be obtained on request from NFPA or viewed at www.nfpa.org/disclaimers.

NOTICE: An asterisk (*) following the number or letter designating a paragraph indicates that explanatory material on the paragraph can be found in Annex A.

Changes other than editorial are indicated by a vertical rule beside the paragraph, table, or figure in which the change occurred. These rules are included as an aid to the user in identifying changes from the previous edition. Where one or more complete paragraphs have been deleted, the deletion is indicated by a bullet (•) between the paragraphs that remain.

Information on referenced publications can be found in Chapter 2 and Annex C.

Chapter 1 Administration

1.1 Scope. This standard covers performance requirements for emergency and standby power systems providing an alternate source of electrical power to loads in buildings and facilities in the event that the primary power source fails.

1.1.1 Power systems covered in this standard include power sources, transfer equipment, controls, supervisory equipment, and all related electrical and mechanical auxiliary and accessory equipment needed to supply electrical power to the load terminals of the transfer equipment.

1.1.2 This standard covers installation, maintenance, operation, and testing requirements as they pertain to the performance of the emergency power supply system (EPSS).

1.1.3 This standard does not cover the following:

(1) Application of the EPSS
(2) Emergency lighting unit equipment
(3) Distribution wiring
(4) Utility service, when such service is permitted as the EPSS
(5) Parameters for stored energy devices

1.1.4* This standard does not establish criteria for stored energy systems.

1.1.5 The selection of any of the following is not within the scope of this standard:

(1) Specific buildings or facilities, or both, requiring an EPSS
(2) Specific loads to be served by the EPSS
(3)*Assignment of type, class, or level to any specific load

1.2 Purpose. This standard contains performance requirements for an EPSS.

1.2.1 It is the role of other NFPA standards to specify which occupancies require an EPSS and the applicable level, type, and class. This standard does not specify where an EPSS is required.

1.2.2 This standard also is intended to provide guidance for inspectors, designers, installers, manufacturers, and users of EPSSs and to serve as a vehicle for communication between the parties involved. It is not intended as a design manual.

1.2.3 Compliance with this standard is not intended to exempt the parties involved from their respective responsibilities for the design, installation, maintenance, performance, or compliance with other applicable standards and codes.

1.3 Application. This document applies to new installations of EPSSs. Existing systems shall not be required to be modified to conform, except where the authority having jurisdiction determines that nonconformity presents a distinct hazard to life.

1.4 Equivalency. Nothing in this standard is intended to prevent the use of systems, methods, or devices of equivalent or superior quality, strength, fire resistance, effectiveness, durability, and safety to those prescribed by this standard.

1.4.1 Technical documentation shall be submitted to the authority having jurisdiction to demonstrate equivalency.

1.4.2 The system, method, or device shall be approved for the intended purpose by the authority having jurisdiction.

Chapter 2 Referenced Publications

2.1 General. The documents or portions thereof listed in this chapter are referenced within this standard and shall be considered part of the requirements of this document.

2.2 NFPA Publications. National Fire Protection Association, 1 Batterymarch Park, Quincy, MA 02169-7471.

NFPA 30, *Flammable and Combustible Liquids Code,* 2003 edition.

NFPA 37, *Standard for the Installation and Use of Stationary Combustion Engines and Gas Turbines,* 2002 edition.

NFPA 54, *National Fuel Gas Code,* 2002 edition.

NFPA 58, *Liquefied Petroleum Gas Code,* 2004 edition.

NFPA 70, *National Electrical Code®,* 2005 edition.

NFPA 72®, Fire Alarm Code®, 2002 edition.

NFPA 99, *Standard for Health Care Facilities,* 2005 edition.

2.3 Other Publications.

2.3.1 ASCE Publication. American Society of Civil Engineers, 1801 Alexander Bell Drive, Reston, VA 20191.

ASCE 7, *Minimum Design Loads for Buildings and Other Structures,* 2002.

Chapter 3 Definitions

3.1 General. The definitions contained in this chapter shall apply to the terms used in this standard. Where terms are not defined in this chapter or within another chapter, they shall be defined using their ordinarily accepted meanings within the context in which they are used. *Merriam-Webster's Collegiate Dictionary,* 11th edition, shall be the source for the ordinarily accepted meaning.

3.2 NFPA Official Definitions.

3.2.1* Approved. Acceptable to the authority having jurisdiction.

Copyright National Fire Protection Association
Provided by IHS under license with NFPA
No reproduction or networking permitted without license from IHS
Not for Resale

3.2.2* Authority Having Jurisdiction (AHJ). An organization, office, or individual responsible for enforcing the requirements of a code or standard, or for approving equipment, materials, an installation, or a procedure.

3.2.3 Labeled. Equipment or materials to which has been attached a label, symbol, or other identifying mark of an organization that is acceptable to the authority having jurisdiction and concerned with product evaluation, that maintains periodic inspection of production of labeled equipment or materials, and by whose labeling the manufacturer indicates compliance with appropriate standards or performance in a specified manner.

3.2.4* Listed. Equipment, materials, or services included in a list published by an organization that is acceptable to the authority having jurisdiction and concerned with evaluation of products or services, that maintains periodic inspection of production of listed equipment or materials or periodic evaluation of services, and whose listing states that either the equipment, material, or service meets appropriate designated standards or has been tested and found suitable for a specified purpose.

3.2.5 Shall. Indicates a mandatory requirement.

3.2.6 Should. Indicates a recommendation or that which is advised but not required.

3.2.7 Standard. A document, the main text of which contains only mandatory provisions using the word "shall" to indicate requirements and which is in a form generally suitable for mandatory reference by another standard or code or for adoption into law. Nonmandatory provisions shall be located in an appendix or annex, footnote, or fine-print note and are not to be considered a part of the requirements of a standard.

3.3 General Definitions.

3.3.1* Battery Certification. The certification by a battery manufacturer that a battery is built to industry standards.

3.3.2 Battery, Lead-Acid.

3.3.2.1 ***Valve-Regulated (VRLA).*** A lead-acid battery consisting of sealed cells furnished with a valve that opens to vent the battery whenever the internal pressure of the battery exceeds the ambient pressure by a set amount. In VRLA batteries, the liquid electrolyte in the cells is immobilized in an absorptive glass mat (AGM cells or batteries) or by the addition of a gelling agent (gel cells or gelled batteries).

3.3.2.2 ***Vented (Flooded).*** A lead-acid battery consisting of cells that have electrodes immersed in liquid electrolyte. Flooded lead-acid batteries may have a provision for the user to add water to the cell and are equipped with a flame-arresting vent which permits the escape of hydrogen and oxygen gas from the cell in a diffused manner such that a spark, or other ignition source, outside the cell will not ignite the gases inside the cell.

3.3.3 Black Start. Where the stored energy system has the capability to start the prime mover without using energy from another source.

3.3.4* Emergency Power Supply (EPS). The source of electric power of the required capacity and quality for an emergency power supply system (EPSS).

3.3.5* Emergency Power Supply System (EPSS). A complete functioning EPS system coupled to a system of conductors, disconnecting means and overcurrent protective devices, transfer switches, and all control, supervisory, and support devices up to and including the load terminals of the transfer equipment needed for the system to operate as a safe and reliable source of electric power.

3.3.6 Fuel Tank.

3.3.6.1 ***Day Fuel Tank.*** A fuel tank, located inside a structure, that provides fuel to the engine.

3.3.6.2 ***Enclosed Fuel Tank.*** A fuel tank located within a separate room, separated from other equipment.

3.3.6.3 ***Integral Fuel Tank in EPS Systems.*** A fuel tank furnished by the EPS supplier and mounted on the engine or under as a subbase.

3.3.6.4 ***Main Fuel Tank.*** A separate, main fuel tank for supplying fuel to the engine or a day tank.

3.3.7 Lamp. An illuminating indicator.

3.3.8 Occupancy Category. See ASCE 7, *Minimum Design Loads for Buildings and Other Structures*, Section 9, 2002 edition.

3.3.9 Switch.

3.3.9.1 ***Automatic Transfer Switch.*** Self-acting equipment for transferring one or more load conductor connections from one power source to another.

3.3.9.2 ***Bypass-Isolation Switch.*** A manually operated device used in conjunction with an automatic transfer switch to provide a means of directly connecting load conductors to a power source and disconnecting the automatic transfer switch.

3.3.9.3 ***Nonautomatic Transfer Switch.*** A device, operated by direct manpower or electrical remote manual control, for transferring one or more load conductor connections from one power source to another.

Chapter 4 Classification of Emergency Power Supply Systems (EPSSs)

4.1* General. The EPSS shall provide a source of electrical power of required capacity, reliability, and quality to loads for a length of time as specified in Table 4.1(a) and within a specified time following loss or failure of the normal power supply as specified in Table 4.1(b).

4.2* Class. The class defines the minimum time, in hours, for which the EPSS is designed to operate at its rated load without being refueled or recharged. *[see Table 4.1(a).]*

4.3 Type. The type defines the maximum time, in seconds, that the EPSS will permit the load terminals of the transfer switch to be without acceptable electrical power. Table 4.1(b) provides the types defined by this standard.

4.4* Level. This standard recognizes two levels of equipment installation, performance, and maintenance.

4.4.1* Level 1 systems shall be installed when failure of the equipment to perform could result in loss of human life or serious injuries.

4.4.2* Level 2 systems shall be installed when failure of the EPSS to perform is less critical to human life and safety and where the authority having jurisdiction shall permit a higher degree of flexibility than that provided by a Level 1 system.

4.4.3 All equipment shall be permanently installed.

Copyright National Fire Protection Association
Provided by IHS under license with NFPA
No reproduction or networking permitted without license from IHS
Not for Resale

Table 4.1(a) Classification of EPSSs

Class	Minimum Time
Class 0.083	0.083 hr (5 min)
Class 0.25	0.25 hr (15 min)
Class 2	2 hr
Class 6	6 hr
Class 48	48 hr
Class X	Other time, in hours, as required by the application, code, or user

Table 4.1(b) Types of EPSSs

Designation	Power Restoration
Type U	Basically uninterruptible (UPS systems)
Type 10	10 sec
Type 60	60 sec
Type 120	120 sec
Type M	Manual stationary or nonautomatic — no time limit

4.4.4* Level 1 and Level 2 systems shall ensure that all loads served by the EPSS are supplied with alternate power that meets all the following criteria:

(1) Of a quality within the operating limits of the load
(2) For a duration specified for the class as defined in Table 4.1(a)
(3) Within the time specified for the type as defined in Table 4.1(b)

Chapter 5 Emergency Power Supply (EPS): Energy Sources, Converters, and Accessories

5.1 Energy Sources.

5.1.1* The following energy sources shall be permitted to be used for the emergency power supply (EPS):

(1)*Liquid petroleum products at atmospheric pressure
(2) Liquefied petroleum gas (liquid or vapor withdrawal)
(3) Natural or synthetic gas

Exception: For Level 1 installations in locations where the probability of interruption of off-site fuel supplies is high, on-site storage of an alternate energy source sufficient to allow full output of the EPSS to be delivered for the class specified shall be required, with the provision for automatic transfer from the primary energy source to the alternate energy source.

5.1.2 Seismic design category C, D, E, or F, as determined in accordance with ASCE 7, shall require a Level 1 EPSS Class X (minimum of 96 hours of fuel supply).

5.1.3 The energy sources listed in 5.1.1 shall be permitted to be used for the EPS where the primary source of power is by means of on-site energy conversion, provided that there is separately dedicated energy conversion equipment on-site with a capacity equal to the power needs of the EPSS.

5.1.4* A public electric utility that has a demonstrated reliability shall be permitted to be used as the EPS where the primary source is by means of on-site energy conversion.

5.2 Energy Converters — General.

5.2.1 Energy converters shall consist only of rotating equipment as indicated in 5.2.4.

5.2.1.1 Level 1 energy converters shall be representative products built from components that have proven compatibility and reliability and are coordinated to operate as a unit.

5.2.1.2 The capability of the energy converter, with its controls and accessories, to survive without damage from common and abnormal disturbances in actual load circuits shall be demonstrable by tests on separate prototype models, or by acceptable tests on the system components as performed by the component suppliers, or by tests performed in the listing process for the assembly.

5.2.1.3 A separate prototype unit shall be permitted to be utilized in a Level 1 or Level 2 installation, provided that all prototype tests produce no deleterious effects on the unit, and the authority having jurisdiction, the owner, and the user are informed that the unit is the prototype test unit.

5.2.2* The rotating equipment prototype unit shall be tested with all typical prime mover accessories that affect its power output in place and operating. These accessories include, but shall not be limited to, the following:

(1) Battery-charging alternator
(2) Water pump
(3) Radiator fan for unit-mounted radiators or oil coolers (or comparable load)
(4) Fuel pump and fuel filter(s)
(5) Air filter(s)
(6) Exhaust mufflers or restriction simulating the maximum backpressure recommended by the prime mover manufacturer

5.2.3 The energy converter for Level 1 systems shall be specifically designed, assembled, and tested to ensure system operation under the following conditions:

(1) Short circuits
(2) Load surges due to motor starting
(3) Elevator operations
(4) Silicon controlled rectifier (SCR) controllers
(5) X-ray equipment
(6) Overspeed, overtemperature, or overload
(7) Adverse environmental conditions

5.2.4 Rotating equipment shall consist of a generator driven by one of the following prime mover types:

(1) Otto cycle (spark ignited)
(2) Diesel cycle
(3) Gas turbine cycle

5.2.4.1 Other types of prime movers and their associated equipment meeting the applicable performance requirements of this standard shall be permitted, if acceptable to the authority having jurisdiction.

5.2.4.2 Where used for Level 1 applications, the prime mover shall not mechanically drive any equipment other than its operating accessories and its generator.

5.2.5 The EPS shall be installed in accordance with NFPA 70, *National Electrical Code®*.

Copyright National Fire Protection Association
Provided by IHS under license with NFPA
No reproduction or networking permitted without license from IHS
Not for Resale

5.3 Energy Converters — Temperature.

5.3.1 The EPS shall be heated as necessary to maintain the water jacket and battery temperature determined by the EPS manufacturer for cold start and load acceptance for the type of EPSS.

5.3.2 All prime mover heaters shall be automatically deactivated while the prime mover is running. *(For combustion turbines, see 7.7.6.)*

5.3.2.1 Air-cooled prime movers shall be permitted to employ a heater to maintain lubricating oil temperature as recommended by the prime mover manufacturer.

5.3.3 Antifreeze protection shall be provided according to the manufacturer's recommendations.

5.3.4 Ether-type starting aids shall not be permitted.

5.4* Energy Converters — Capacity. The energy converters shall have the required capacity and response to pick up and carry the load within the time specified in Table 4.1(b) after loss of primary power.

5.5 Energy Converters — Fuel Supply.

5.5.1 The fuel supplies specified in 5.1.1(1) and 5.1.1(2) for energy converters intended for Level 1 use shall not be used for any other purpose. *(For fuel system requirements, see Section 7.9.)*

5.5.1.1 Enclosed fuel tanks shall be permitted to be used for supplying fuel for other equipment, provided that the drawdown level always guarantees the quantity needed for the EPSS.

5.5.1.2 Vapor-withdrawal LP-Gas systems shall have a dedicated fuel supply.

5.5.2* A low-fuel sensing switch shall be provided for the main fuel supply tank(s) using the energy sources listed in 5.1.1(1) and 5.1.1(2) to indicate when less than the minimum fuel necessary for full load running, as required by the specified class in Table 4.1(a), remains in the main fuel tank.

5.5.3* The main fuel tank shall have a minimum capacity of at least 133 percent of either the low-fuel sensor quantity specified in 5.5.2 or that specified in Table 4.1(a) (class).

5.6 Rotating Equipment.

5.6.1 General. Prime movers and accessories shall comply with NFPA 37, *Standard for the Installation and Use of Stationary Combustion Engines and Gas Turbines*, except as modified in this standard.

5.6.2 Prime Mover Ratings. Proper derating factors, such as altitudes, ambient temperature, fuel energy content, accessory losses, and site conditions as recommended by the manufacturer of the generator set shall be used in determining whether or not brake power meets the connected load requirements.

5.6.3 Prime Mover Accessories.

5.6.3.1 Governors shall maintain a bandwidth of rated frequency for any constant load (steady-state condition) that is compatible with the load.

5.6.3.1.1 The frequency droop between no load and full load shall be within the range for the load.

5.6.3.1.2 The frequency dip upon one-step application of the full load shall not be outside the range for the load, with a return to steady-state conditions occurring within the requirements of the load.

5.6.3.2 Solenoid valves, where used, both in the fuel line from the supply or day tank closest to the generator set and in the water-cooling lines, shall operate from battery voltage.

5.6.3.2.1 Solenoid valves shall have a manual (nonelectric) operation, or a manual bypass valve shall be provided.

5.6.3.2.1.1 The manual bypass valve shall be visible and accessible and its purpose identified.

5.6.3.2.1.2 The fuel bypass valve shall not be the valve used for malfunction or emergency shutdown.

5.6.3.3 The prime mover shall be provided with the following instruments:

(1) Oil pressure gauge to indicate lubricating oil pressure. Engines with splash-lubricated systems shall not require this gauge.
(2) Temperature gauge to indicate cooling medium temperature. Air-cooled engines shall not require this gauge.
(3) Hour meter to indicate actual total running time.
(4) Battery-charging meter indicating performance of prime mover–driven battery charging means.
(5) Other instruments as recommended or provided by the prime mover manufacturer where required for maintenance.

5.6.3.4 The instruments required in 5.6.3.3(1) through 5.6.3.3(4) shall be placed on an enclosed panel, located in proximity to or on the energy converter, in a location that allows maintenance personnel to observe them readily. The enclosed panel shall be mounted by means of antishock vibration mountings if mounted on the energy converter.

5.6.3.5 All wiring for connection to the control panel shall be harnessed or flexibly enclosed, shall be securely mounted on the prime mover to prevent chafing and vibration damage, and shall terminate at the control panel in an enclosed box or panel. *(For control panel requirements, see 5.6.5.)*

5.6.3.6 The generator set shall be fitted with an integral accessory battery charger, driven by the prime mover and automatic voltage regulator, and capable of charging and maintaining the starting battery unit (and control battery, where used) in a fully charged condition during a running condition.

5.6.3.6.1 A battery charger driven by the prime mover shall not be required, provided the automatic battery charger has a high–low rate capable of fully charging the starting battery during running conditions as specified in 5.6.3.6.

5.6.4 Prime Mover Starting Equipment.

5.6.4.1 Starting Systems. Starting shall be accomplished using either an electric starter or a stored energy starting system.

5.6.4.1.1 Electric starter systems shall start using a positive shift solenoid to engage the starter motor and to crank the prime mover for the period specified in 5.6.4.2 without overheating, at a speed at least equal to that recommended by the manufacturer of the prime mover and at the lowest ambient temperature anticipated at the installation site.

5.6.4.1.2 Other types of stored energy starting systems (except pyrotechnic) shall be permitted to be used where recommended by the manufacturer of the prime mover and subject to approval of the authority having jurisdiction, under the following conditions:

(1) Where two complete periods of cranking cycles are completed without replacement of the stored energy

Copyright National Fire Protection Association
Provided by IHS under license with NFPA
No reproduction or networking permitted without license from IHS
Not for Resale

(2) Where a means for automatic restoration from the emergency source of the stored energy is be provided
(3) Where the stored energy system has the cranking capacity specified in 5.6.4.2.1
(4) Where the stored energy system has a "black start" capability in addition to normal discharge capability

5.6.4.2* Otto or Diesel Cycle Prime Movers. For otto or diesel cycle prime movers, the type and duration of the cranking cycle shall be as specified in Table 5.6.4.2.

Table 5.6.4.2 Starting Equipment Requirements

Starting Equipment Requirements	Level 1	Level 2
(a) Battery unit	X	X
(b) Battery certification	X	NA
(c) Cycle cranking	X or O	O
(d) Cranking limiter time-outs		
Cycle crank (3 cycles)	75 sec	75 sec
Continuous crank	45 sec	45 sec
(e) Float-type battery charger	X	X
1. dc ammeter	X	X
2. dc voltmeter	X	X
(f) Recharge time	24 hr	36 hr
(g) Low battery voltage alarm contacts	X	X

X: Required. O: Optional. NA: Not applicable.

5.6.4.2.1 A complete cranking cycle shall consist of an automatic crank period of approximately 15 seconds followed by a rest period of approximately 15 seconds. Upon starting and running the prime mover, further cranking shall cease.

5.6.4.2.2 Two means of cranking termination shall be utilized so that one serves as backup to prevent inadvertent starter engagement.

5.6.4.2.3 Otto cycle prime movers of 15 kW and lower and all diesel prime movers shall be permitted to use continuous cranking methods.

5.6.4.3* Number of Batteries. Each prime mover shall be provided with both of the following:

(1) Storage battery units as specified in Table 5.6.4.2
(2) A storage rack for each battery or battery unit

5.6.4.4* Size of Batteries. The battery unit shall have the capacity to maintain the cranking speed recommended by the prime mover manufacturer through two complete periods of cranking limiter time-outs as specified in Table 5.6.4.2, item (d).

5.6.4.5 Type of Battery. The battery shall be of the nickel-cadmium or lead-acid type.

5.6.4.5.1* Lead-acid batteries shall be furnished as charged when wet. Drain-dry batteries or dry-charged lead-acid batteries shall be permitted.

5.6.4.5.2 When furnished, vented nickel-cadmium batteries shall be filled and charged and shall have listed flip-top, flame arrester vent caps.

5.6.4.5.3 The manufacturer shall provide installation, operation, and maintenance instructions and for batteries shipped dry, electrolyte mixing instructions.

5.6.4.5.4 Batteries shall not be installed until the battery charger is in service.

5.6.4.5.5 All batteries used in this service shall have been designed for this duty and shall have demonstrable characteristics of performance and reliability acceptable to the authority having jurisdiction.

5.6.4.5.6 Batteries shall be prepared for use according to the battery manufacturer's instructions.

5.6.4.6* Automatic Battery Charger. In addition to the prime mover- (engine-) driven charger required in 5.6.3.6.1, a battery charger(s) as required in Table 5.6.4.2 shall be supplied for recharging or maintaining a charge, or both, on the starting or control battery unit, or both.

5.6.4.7 All chargers shall include the following characteristics, which are to be accomplished without manual intervention (i.e., manual switch or manual tap changing):

(1) At its rated voltage, the charger shall be capable of delivering energy into a fully discharged battery unit without damaging the battery.
(2) The charger shall be capable of returning the fully discharged battery to 100 percent of its ampere-hour rating within the time specified in Table 5.6.4.2, item (f).
(3) As specified in Table 5.6.4.2, item (e), meters with an accuracy within 5 percent of range shall be furnished.
(4) The charger shall be permanently marked with the following:
    (a) Allowable range of battery unit capacity
    (b) Nominal output current and voltage
    (c) Sufficient battery-type data to allow replacement batteries to be obtained
(5) The battery charger output and performance shall be compatible with the batteries furnished.

5.6.5 Control Functions.

5.6.5.1 A control panel shall be provided and shall contain the following:

(1) Automatic remote start capability
(2) "Run-off-automatic" switch
(3) Shutdowns as required by 5.6.5.2(3)
(4) Alarms as required by 5.6.5.2(4)
(5) Controls as required by 5.6.5.2(5)

5.6.5.2 Where a control panel is mounted on the energy converter, it shall be mounted by means of antivibration shock mounts, if required, to maximize reliability. An automatic control and safety panel shall be a part of the EPS containing the following equipment or possess the following characteristics, or both:

(1) Cranking control equipment to provide the complete cranking cycle described in 5.6.4.2 and required by Table 5.6.4.2
(2) Panel-mounted control switch(es) marked "run–off–automatic" to perform the following functions:
    (a) Run: Manually initiate, start, and run prime mover
    (b) Off: Stop prime mover or reset safeties, or both
    (c) Automatic: Allow prime mover to start by closing a remote contact and stop by opening the remote contact
(3) Controls to shut down and lock out the prime mover under any of the following conditions:
    (a) Failing to start after specified cranking time
    (b) Overspeed
    (c) Low lubricating-oil pressure

Copyright National Fire Protection Association
Provided by IHS under license with NFPA
No reproduction or networking permitted without license from IHS
Not for Resale

(d) High engine temperature (An automatic engine shutdown device for high lubricating-oil temperature shall not be required.)
(e) Operation of remote manual stop station

(4) Individual alarm indication to annunciate any of the conditions listed in Table 5.6.5.2 and with the following characteristics:
(a) Battery powered
(b) Visually indicated
(c) Have additional contacts or circuits for a common audible alarm that signals locally and remotely when any of the itemized conditions occurs
(d) Have a lamp test switch(es) to test the operation of all alarm lamps

(5) Controls to shut down the prime mover upon removal of the initiating signal or manual emergency shutdown
(6) The ac instruments listed in 5.6.9.9

5.6.5.3 Engines equipped with a maintaining shutdown device (air shutdown damper) shall have a set of contacts that monitor the position of this device, with local alarm indication and remote annunciation in accordance with Table 5.6.5.2.

5.6.5.4 The control panel in 5.6.5.2(4) shall be specifically approved for either a Level 1 or a Level 2 EPS consistent with the installation.

5.6.5.5 The cranking cycle shall be capable of being initiated by any of the following:

(1) Manual start initiation as specified in 5.6.5.2(2)(a).
(2) Loss of normal power at any automatic transfer switch considered a part of the EPSS. Prime mover shall start upon closing of a remote switch or contacts and shall stop, after appropriate time delays, when switch or contacts are opened.
(3) Clock exerciser located in an automatic transfer switch or in the control panel.
(4) Manually operated (test) switch located in each automatic transfer switch (ATS) that simulates a loss of power and causes automatic starting and operation until this switch is reset, to cause the engine circuit to duplicate its functions in the same manner commercial power is restored after a true commercial power failure.

Table 5.6.5.2 Safety Indications and Shutdowns

	Level 1			Level 2		
Indicator Function (at Battery Voltage)	**CV**	**S**	**RA**	**CV**	**S**	**RA**
(a) Overcrank	X	X	X	X	X	O
(b) Low water temperature	X	NA	X	X	NA	O
(c) High engine temperature pre-alarm	X	NA	X	O	NA	NA
(d) High engine temperature	X	X	X	X	X	O
(e) Low lube oil pressure pre-alarm	X	NA	X	O	NA	NA
(f) Low lube oil pressure	X	X	X	X	X	O
(g) Overspeed	X	X	X	X	X	O
(h) Low fuel main tank	X	NA	X	O	NA	O
(i) Low coolant level	X	O	X	X	O	X
(j) EPS supplying load	X	NA	NA	O	NA	NA
(k) Control switch not in automatic position	X	NA	X	O	NA	NA
(l) High battery voltage	X	NA	NA	O	NA	NA
(m) Low cranking voltage	X	NA	X	O	NA	O
(n) Low voltage in battery	X	NA	NA	O	NA	NA
(o) Battery charger ac failure	X	NA	NA	O	NA	NA
(p) Lamp test	X	NA	NA	X	NA	NA
(q) Contacts for local and remote common alarm	X	NA	X	X	NA	X
(r) Audible alarm silencing switch	NA	NA	X	NA	NA	O
(s) Low starting air pressure	X	NA	NA	O	NA	NA
(t) Low starting hydraulic pressure	X	NA	NA	O	NA	NA
(u) Air shutdown damper when used	X	X	X	X	X	O
(v) Remote emergency stop	NA	X	NA	NA	X	NA

CV: Control panel-mounted visual. S: Shutdown of EPS indication. RA: Remote audible. X: Required. O: Optional. NA: Not applicable.
Notes:
1. Item (p) shall be provided, but a separate remote audible signal shall not be required when the regular work site in 5.6.6 is staffed 24 hours a day.
2. Item (b) is not required for combustion turbines.
3. Item (r) or (s) shall apply only where used as a starting method.
4. Item (j): EPS ac ammeter shall be permitted for this function.
5. All required CV functions shall be visually annunciated by a remote, common visual indicator.
6. All required functions indicated in the RA column shall be annunciated by a remote, common audible alarm as required in 5.6.5.2(4).
7. Item (h) on gaseous systems shall require a low gas pressure alarm.
8. Item (b) shall be set at 11°C (20°F) below the regulated temperature determined by the EPS manufacturer as required in 5.3.1.

Copyright National Fire Protection Association
Provided by IHS under license with NFPA
No reproduction or networking permitted without license from IHS
Not for Resale

5.6.5.6* All installations shall have a remote manual stop station of a type to prevent inadvertent or unintentional operation located outside the room housing the prime mover, where so installed, or elsewhere on the premises where the prime mover is located outside the building.

5.6.5.6.1 The remote manual stop station shall be labeled.

5.6.6 Remote Controls and Alarms. A remote, common audible alarm shall be provided as specified in 5.6.5.2(4) that is powered by the storage battery and located outside of the EPS service room at a work site observable by personnel.

5.6.6.1 An alarm-silencing means shall be provided, and the panel shall include repetitive alarm circuitry so that, after the audible alarm has been silenced, it reactivates after the fault condition has been cleared and has to be restored to its normal position to be silenced again.

5.6.6.2 In lieu of the requirement in 5.6.6.1, a manual alarm-silencing means shall be permitted that silences the audible alarm after the occurrence of the alarm condition, provided such means do not inhibit any subsequent alarms from sounding the audible alarm again without further manual action.

5.6.7 Prime Mover Cooling Systems. Cooling systems for prime movers shall be either forced-air or natural convection, liquid-cooled, or a combination thereof.

5.6.7.1 Forced-air-cooled diesel or otto cycle engines shall have an integral fan selected to cool the prime mover under full load conditions.

5.6.7.2 Ventilation shall be provided for the evacuation of hot air from the EPS service room or the enclosure housing the unit.

5.6.7.3 Liquid-cooled prime movers for Level 1 applications shall be arranged for closed-loop cooling and consist of one of the following types as required in Section 7.8:

(1) Unit-mounted radiator and fan
(2) Remote radiator
(3) Heat exchanger (liquid-to-liquid)

5.6.7.4 Cooling systems shall prevent overheating of prime movers under conditions of highest anticipated ambient temperature at the installed elevation (above sea level) when fully loaded.

5.6.7.5 Power for fans and pumps on remote radiators and heat exchangers shall be supplied from a tap at the EPS output terminals or ahead of the first load circuit overcurrent protective device.

5.6.7.6 The secondary side of heat exchangers shall be a closed-loop cycle, that is, one that recycles the cooling agent.

5.6.8 Prime Mover Exhaust Piping. Where applicable, the exhaust system shall include a muffler or silencer sized for the unit and a flexible exhaust section.

5.6.9 Generators, Exciters, and Voltage Regulators. Generators shall comply with Article 445 of NFPA 70, *National Electrical Code*, and with the requirements of 5.6.9.1 through 5.6.9.9.

5.6.9.1* The generator shall be of dripproof construction and have amortisseur windings.

5.6.9.2 The generator shall be suitable for the environmental conditions at the installation location.

5.6.9.3 The generator systems shall be factory tested as a unit to ensure operational integrity of all of the following:

(1) Generator
(2) Exciter
(3) Voltage regulator

5.6.9.4 EPS voltage output, or the output of the transformer immediately down-line from the EPS, at full load shall match the nominal voltage of the normal source at the transfer switch(es).

5.6.9.5 Exciters, where furnished, shall be of either the rotating type or the static type.

5.6.9.6 Voltage regulators shall be capable of responding to load changes to meet the system stability requirements of 5.6.9.8.

5.6.9.7 If the system stability requirements of 5.6.9.8 cannot be accomplished, anti-hunt provisions shall be included.

5.6.9.8 Generator system performance (i.e., prime mover, generator, exciter, and voltage regulator, as applicable when prototype tested as specified in 5.2.1.2) shall be as follows:

(1) Stable voltage and frequency at all loads shall be provided to full-rated loads.
(2) Values consistent with the user's needs for frequency droop and voltage droop shall be maintained.
(3) Voltage dip at the generator terminals for the maximum anticipated load change shall not cause disruption or relay dropout in the load.
(4) Frequency dip and restoration to steady state for any sudden load change shall not exceed the user's specified need.

5.6.9.9 The generator instrument panel for Level 1 applications shall contain the following:

(1) An ac voltmeter(s) for each phase or a phase selector switch
(2) An ac ammeter(s) for each phase or a phase selector switch
(3) A frequency meter
(4) A voltage-adjusting rheostat to allow +5 percent voltage adjustment

5.6.10 Miscellaneous Requirements.

5.6.10.1 Where applicable, the prime mover and generator shall be factory mounted on a common base, rigid enough to maintain the dynamic alignment of the rotating element of the system prior to shipment to the installation site.

5.6.10.2 A certification shall be supplied with the unit that verifies the torsional vibration compatibility of the rotating element of the prime mover and generator for the intended use of the energy converter.

5.6.10.3* Vibration isolators shall be furnished where necessary to minimize vibration transmission to the permanent structure.

5.6.10.4 The manufacturer of the EPS shall submit complete schematic, wiring, and interconnection diagrams showing all terminal and destination markings for all EPS equipment, as well as the functional relationship between all electrical components.

5.6.10.5 The energy converter supplier shall stipulate compliance and performance with this standard for the entire unit when installed.

5.6.10.6 Where requested, the short circuit current capability at the generator output terminals shall be furnished.

Copyright National Fire Protection Association
Provided by IHS under license with NFPA
No reproduction or networking permitted without license from IHS
Not for Resale

Chapter 6 Transfer Switch Equipment

6.1 General.

6.1.1* Switches shall transfer electric loads from one power source to another.

6.1.2* The electrical rating shall be sized for the total load that is designed to be connected.

6.1.3 Each switch shall be in a separate enclosure or compartment.

6.1.4 The switch, including all load current-carrying components, shall be listed for all load types to be served.

6.1.5 The switch, including all load current-carrying components, shall be designed to withstand the effects of available fault currents.

6.1.6* Where available, each switch shall be listed for emergency service as a completely factory-assembled and factory-tested apparatus.

6.2 Automatic Transfer Switch Features.

6.2.1* General. Automatic transfer switches shall be capable of all of the following:

(1) Electrical operation and mechanical holding
(2) Transfer and retransfer of the load automatically
(3) Visual annunciation when "not-in-automatic"

6.2.2 Source Monitoring.

6.2.2.1* Undervoltage-sensing devices shall be provided to monitor all ungrounded lines of the primary source of power as follows:

(1) When the voltage on any phase falls below the minimum operating voltage of any load to be served, the transfer switch shall automatically initiate engine start and the process of transfer to the EPS.
(2)*When the voltage on all phases of the primary source returns to within specified limits for a designated period of time, the process of transfer back to primary power shall be initiated.

6.2.2.2 Both voltage-sensing and frequency-sensing equipment shall be provided to monitor one ungrounded line of the EPS.

6.2.2.3 Transfer to the EPS shall be inhibited until the voltage and frequency are within a specified range to handle loads to be served.

6.2.2.3.1 Sensing equipment shall not be required in the transfer switch, provided it is included with the engine control panel.

6.2.2.3.2 Frequency-sensing equipment shall not be required for monitoring the public utility source where used as an EPS, as permitted by 5.1.4.

6.2.3 Interlocking. Mechanical interlocking or an approved alternate method shall prevent the inadvertent interconnection of the primary power supply and the EPS, or any two separate sources of power.

6.2.4* Manual Operation. Instruction and equipment shall be provided for safe manual nonelectric transfer in the event the transfer switch malfunctions.

6.2.5* Time Delay on Starting of EPS. A time-delay device shall be provided to delay starting of the EPS. The timer shall prevent nuisance starting of the EPS and possible subsequent load transfer in the event of harmless momentary power dips and interruptions of the primary source.

6.2.6 Time Delay at Engine Control Panel. Time delays shall be permitted to be located at the engine control panel in lieu of in the transfer switches.

6.2.7 Time Delay on Transfer to EPS. An adjustable time-delay device shall be provided to delay transfer and sequence load transfer to the EPS to avoid excessive voltage drop when the transfer switch is installed for Level 1 use.

6.2.7.1 Time Delay Commencement. The time delay shall commence when proper EPS voltage and frequency are achieved.

6.2.7.2 Time Delay at Engine Control Panel. Time delays shall be permitted to be located at the engine control panel in lieu of in the transfer switches.

6.2.8* Time Delay on Retransfer to Primary Source. An adjustable time-delay device with automatic bypass shall be provided to delay retransfer from the EPS to the primary source of power and to allow the primary source to stabilize before retransfer of the load.

6.2.9 Time Delay Bypass If EPS Fails. The time delay shall be automatically bypassed if the EPS fails.

6.2.9.1 The transfer switch shall be permitted to be programmed for a manually initiated retransfer to the primary source to provide for a planned momentary interruption of the load.

6.2.9.2 If used, the arrangement in 6.2.9.1 shall be provided with a bypass feature to allow automatic retransfer in the event that the EPS fails and the primary source is available.

6.2.10 Time Delay on Engine Shutdown. A minimum time delay of 5 minutes shall be provided for unloaded running of the EPS prior to shutdown to allow for engine cooldown.

6.2.10.1 The minimum 5-minute delay shall not be required on small (15 kW or less) air-cooled prime movers.

6.2.10.2 A time-delay device shall not be required, provided it is included with the engine control panel, or if a utility feeder is used as an EPS.

6.2.11 Engine Generator Exercising Timer. A program timing device shall be provided to exercise the EPS as described in Chapter 8.

6.2.11.1 Transfer switches shall transfer the connected load to the EPS and immediately return to primary power automatically in case of the EPS failure.

6.2.11.2 Exercising timers shall be permitted to be located at the engine control panel in lieu of in the transfer switches.

6.2.11.3 A program timing device shall not be required in health care facilities that provide scheduled testing in accordance with NFPA 99, *Standard for Health Care Facilities*.

6.2.12 Test Switch. A test means shall be provided on each ATS that simulates failure of the primary power source and then transfers the load to the EPS.

Copyright National Fire Protection Association
Provided by IHS under license with NFPA
No reproduction or networking permitted without license from IHS
Not for Resale

6.2.13* Indication of Transfer Switch Position. Two pilot lights with identification nameplates or other approved position indicators shall be provided to indicate the transfer switch position.

6.2.14 Motor Load Transfer. Provisions shall be included to reduce currents resulting from motor load transfer if such currents could damage EPSS equipment or cause nuisance tripping of EPSS overcurrent protective devices.

6.2.15* Isolation of Neutral Conductors. Provisions shall be included for ensuring continuity, transfer, and isolation of the primary and the EPS neutral conductors wherever they are separately grounded to achieve ground-fault sensing.

6.2.16* Nonautomatic Transfer Switch Features. Switching devices shall be mechanically held and shall be operated by direct manual or electrical remote manual control.

6.2.16.1 Interlocking. Reliable mechanical interlocking or an approved alternate method shall prevent the inadvertent interconnection of the primary power source and the EPS.

6.2.16.2 Indication of Transfer Switch Position. Two pilot lights with identification nameplates or other approved position indicators shall be provided to indicate the switch position.

6.3 Load Switching (Load Shedding). When two or more engine generator sets are paralleled for emergency power, the paralleled system shall be arranged to inhibit connection of EPS-damaging loads.

6.3.1 Each transfer switch shall have a continuous current rating and interrupting rating for all classes of loads to be served.

6.3.2 The transfer switch shall be capable of withstanding the available fault current at the point of installation.

6.3.3 The transfer of loads to the EPS shall be sequenced as follows:

(1) First-priority loads shall be switched to the emergency bus upon sensing the availability of emergency power on the bus.
(2) Each time an additional engine generator set is connected to the bus, a remaining load shall be connected in order of priority until all emergency loads are connected to the bus.
(3) The system shall be designed so that, upon failure of one or more engine generator sets, the load is automatically reduced, starting with the load of least priority and proceeding in ascending priority, so that the last load affected is the highest-priority load.

6.4 Bypass-Isolation Switches.

6.4.1 Bypassing and Isolating Transfer Switches. Bypass-isolation switches shall be permitted for bypassing and isolating the transfer switch and shall be installed in accordance with 6.4.2, 6.4.3, and 6.4.4.

6.4.2 Bypass-Isolation Switch Rating. The bypass-isolation switch shall have a continuous current rating and a current rating compatible with that of the associated transfer switch.

6.4.3* Bypass-Isolation Switch Classification. Each bypass-isolation switch shall be listed for emergency electrical service as a completely factory-assembled and factory-tested apparatus.

6.4.4* Operation. With the transfer switch isolated or disconnected, the bypass-isolation switch shall be designed so it can function as an independent nonautomatic transfer switch and allow the load to be connected to either power source.

6.4.5 Reconnection of Transfer Switch. Reconnection of the transfer switch shall be possible without a load interruption greater than the maximum time, in seconds, specified by the type of system.

6.5 Protection.

6.5.1* General. The overcurrent protective devices in the EPSS shall be coordinated to optimize selective tripping of the circuit overcurrent protective devices when a short circuit occurs.

6.5.2 Short Circuit Current. The maximum available short circuit current from both the utility source and the emergency energy source shall be evaluated for the ability to satisfy this coordination capability.

6.5.3* Overcurrent Protective Device Rating. The overcurrent protective device shall have an interrupting rating equal to or greater than the maximum available short circuit current at its location.

6.5.4 Accessibility. Overcurrent devices in EPSS circuits shall be accessible to authorized persons only.

Chapter 7 Installation and Environmental Considerations

7.1 General.

7.1.1* This chapter shall establish minimum requirements and considerations relative to the installation and environmental conditions that have an effect on the performance of the EPSS equipment such as the following:

(1) Geographic location
(2) Building type
(3) Classification of occupancy
(4) Hazard of contents

7.1.2* Minimizing the probability of equipment or cable failure within the EPSS shall be a design consideration to reduce the disruption of loads served by the EPSS.

7.1.3 The EPSS equipment shall be installed as required to meet the user's needs and to be in accordance with all of the following:

(1) This standard
(2) The manufacturer's specifications
(3) The authority having jurisdiction

7.1.4 EPSS equipment installed for the various levels of service defined in this standard shall be designed and assembled for such service.

7.1.5 When the normal power source is not available, the EPS shall be permitted to serve optional loads other than system loads, provided that the EPS has adequate capacity or automatic selective load pickup and load shedding are provided as needed to ensure adequate power to (1) the Level 1 loads, (2) the Level 2 loads, and (3) the optional loads, in that order of priority. When normal power is available, the EPS shall be permitted to be used for other purposes such as peak load shaving, internal voltage control, load relief for the utility providing normal power, or cogeneration.

7.2 Location.

7.2.1 The EPS shall be installed in a separate room for Level 1 installations. EPSS equipment shall be permitted to be installed in this room.

Copyright National Fire Protection Association
Provided by IHS under license with NFPA
No reproduction or networking permitted without license from IHS
Not for Resale

7.2.1.1 The room shall have a minimum 2-hour fire rating or be located in an adequate enclosure located outside the building capable of resisting the entrance of snow or rain at a maximum wind velocity required by local building codes.

7.2.1.2 No other equipment, including architectural appurtenances, except those that serve this space, shall be permitted in this room.

7.2.2* Level 1 EPSS equipment shall not be installed in the same room with the normal service equipment, where the service equipment is rated over 150 volts to ground and equal to or greater than 1000 amperes.

7.2.3* The rooms, shelters, or separate buildings housing Level 1 or Level 2 EPSS equipment shall be designed and located to minimize the damage from flooding, including that caused by the following:

(1) Flooding resulting from fire fighting
(2) Sewer water backup
(3) Similar disasters or occurrences

7.2.4* Minimizing the possibility of damage resulting from interruptions of the emergency source shall be a design consideration for EPSS equipment.

7.2.5 The EPS equipment shall be installed in a location that permits ready accessibility and a minimum of 0.9 m (36 in.) from the skid rails' outermost point in the direction of access for inspection, repair, maintenance, cleaning, or replacement. This requirement shall not apply to units in outdoor housings.

7.2.6 Design considerations shall minimize the effect of the failure of one energy converter on the continued operation of other units.

7.3 Lighting.

7.3.1 The Level 1 or Level 2 EPS equipment location(s) shall be provided with battery-powered emergency lighting. This requirement shall not apply to units located outdoors in enclosures that do not include walk-in access.

7.3.2 The emergency lighting charging system and the normal service room lighting shall be supplied from the load side of the transfer switch.

7.3.3* The intensity of illumination in the separate building or room housing the EPS equipment for Level 1 shall be 32.3 lux (3.0 ft-candles), unless otherwise specified by a requirement recognized by the authority having jurisdiction.

7.4 Mounting.

7.4.1 Rotating energy converters shall be installed on solid foundations to prohibit sagging of fuel, exhaust, or lubricating-oil piping and damage to parts resulting in leakage at joints.

7.4.1.1 Such foundations or structural bases shall raise the engine at least 150 mm (6 in.) above the floor or grade level and be of sufficient elevation to facilitate lubricating-oil drainage and ease of maintenance.

7.4.2 Foundations shall be of the size (mass) and type recommended by the energy converter manufacturer.

7.4.3 Where required to prevent transmission of vibration during operation, the foundation shall be isolated from the surrounding floor or other foundations, or both, in accordance with the manufacturer's recommendations and accepted structural engineering practices.

7.4.4 The EPS shall be mounted on a fabricated metal skid base of the type that shall resist damage during shipping and handling. After installation, the base shall maintain alignment of the unit during operation.

7.5* Vibration. Vibration isolators, as recommended by the manufacturer of the EPS, shall be installed either between the rotating equipment and its skid base or between the skid base and the foundation or inertia base.

7.6* Noise. Design shall include consideration of noise control regulations.

7.7 Heating, Cooling, and Ventilating.

7.7.1* With the EPS running at rated load, ventilation air flow shall be provided to limit the maximum air temperature in the EPS room to the maximum ambient air temperature required by the EPS manufacturer.

7.7.1.1 Consideration shall be given to all the heat emitted to the EPS equipment room by the energy converter, uninsulated or insulated exhaust pipes, and other heat-producing equipment.

7.7.2 Air shall be supplied to the EPS equipment for combustion.

7.7.2.1 For EPS supplying Level 1 EPSS, ventilation air shall be supplied directly from a source outside the building by an exterior wall opening or from a source outside the building by a 2-hour fire rated air transfer system.

7.7.2.2 For EPS supplying Level 1 EPSS, discharge air shall be directed outside the building by an exterior wall opening or to an exterior opening by a 2-hour fire rated air transfer system.

7.7.2.3 Fire dampers, shutters, or other self-closing devices shall not be permitted in ventilation openings or ductwork for supply or return/discharge air to EPS equipment for Level 1 EPSS.

7.7.3 Ventilation air supply shall be from outdoors or from a source outside the building by an exterior wall opening or from a source outside the building by a 2-hour fire rated air transfer system.

7.7.4 Ventilation air shall be provided to supply and discharge cooling air for radiator cooling of the EPS when running at rated load.

7.7.4.1 Ventilation air supply and discharge for radiator-cooled EPS shall have a maximum static restriction of 125 Pa (0.5 in. of water column) in the discharge duct at the radiator outlet.

7.7.4.2 Radiator air discharge shall be ducted outdoors or to an exterior opening by a 2-hour rated air transfer system.

7.7.5 Motor-operated dampers, when used, shall be spring operated to open and motor closed. Fire dampers, shutters, or other self-closing devices shall not be permitted in ventilation openings or ductwork for supply or return/discharge air to EPS equipment for Level 1 EPSS.

7.7.6 The ambient air temperature in the EPS equipment room or outdoor housing containing Level 1 rotating equipment shall be not less than 4.5°C (40°F).

7.7.7 Units housed outdoors shall be heated as specified in 5.3.3.

7.7.8 Design of the heating, cooling, and ventilation system for the EPS equipment room shall include provision for factors including, but not limited to, the following:

(1) Heat
(2) Cold

Copyright National Fire Protection Association
Provided by IHS under license with NFPA
No reproduction or networking permitted without license from IHS
Not for Resale

(3) Dust
(4) Humidity
(5) Snow and ice accumulations around housings
(6) Louvers
(7) Remote radiator fans
(8) Prevailing winds blowing against radiator fan discharge air

7.8 Installed EPS Cooling System.

7.8.1 The installed EPS cooling system shall be designed to cool the prime mover at full rated load while operating in the particular installation circumstances of each EPS.

7.8.1.1 A full load on-site test shall not result in activation of high-temperature pre-alarm or high-temperature shutdown.

7.8.2* For EPSS cooling systems requiring intermittent or continuous waterflow, pressure, or both, a utility, city, or other water supply service shall not be used.

7.8.2.1 The EPSS cooling system shall be permitted to use utility or city water for filling or makeup water.

7.8.3 Makeup water hose bibs and floor drains, where required by other codes and standards, shall be installed in EPS equipment rooms.

7.8.4 Where duct connections are used between the prime mover radiator and air-out louvers, the ducts shall be connected to the prime movers by means of flexible sections.

7.8.5 Design of the EPS cooling system shall consider the following factors:

(1) Remote radiator or heat exchanger sizing
(2) Pipe sizing
(3) Pump sizing
(4) Sufficient shutoffs to isolate equipment to facilitate maintenance
(5) The need for and sizing of de-aeration and surge tanks
(6) Drain valves for cleaning and flushing the cooling system
(7) Type of flexible hoses between the prime mover and the cooling system piping

7.9 Fuel System.

7.9.1 Fuel tanks shall be sized to accommodate the specific EPS class.

7.9.1.1 All fuel tanks and systems shall be installed and maintained in accordance with NFPA 30, *Flammable and Combustible Liquids Code*, NFPA 37, *Standard for the Installation and Use of Stationary Combustion Engines and Gas Turbines*, NFPA 54, *National Fuel Gas Code*, and NFPA 58, *Liquefied Petroleum Gas Code*.

7.9.1.2* Fuel system design shall provide for a supply of clean fuel to the prime mover.

7.9.1.3 Tanks shall be sized so that the fuel is consumed within the storage life, or provision shall be made to replace stale fuel with clean fuel.

7.9.2 Fuel tanks shall be close enough to the prime mover for the fuel lift (suction head) of the prime mover fuel pump to meet the fuel system requirements, or a fuel transfer pump and day tank shall be provided.

7.9.2.1 If the engine manufacturer's fuel pump static head pressure limits are exceeded when the level of fuel in the tank is at a maximum, a day tank shall be utilized.

7.9.3 Fuel piping shall be of compatible metal to minimize electrolysis and shall be properly sized, with vent and fill pipes located to prevent entry of groundwater or rain into the tank.

7.9.3.1 Galvanized fuel lines shall not be used.

7.9.3.2 Approved flexible fuel lines shall be used between the prime mover and the fuel piping.

7.9.4 Day tanks on diesel systems shall be installed below the engine fuel return elevation.

7.9.4.1 The return line to the day tank shall be below the fuel return elevation.

7.9.4.2 Gravity fuel oil return lines between the day tank and the main supply tank shall be sized to handle the potential fuel flow and shall be free of traps so that fuel can flow freely to the main tank.

7.9.5 Integral tanks of the following capacities shall be permitted inside or on roofs of structures, or as approved by the authority having jurisdiction:

(1) Maximum of 2498 L (660 gal) diesel fuel
(2) Maximum of 95 L (25 gal) gasoline fuel

7.9.6* The fuel supply for gas-fueled and liquid-fueled prime movers shall be installed in accordance with applicable standards.

7.9.7* Where the gas supply is connected to the building gas supply system, it shall be connected on the supply side of the main gas shutoff valve and marked as supplying an emergency generator.

7.9.8 The building's main gas shutoff valve shall be marked or tagged to indicate the existence of the separate EPS shutoff valve.

7.9.9 The fuel supply for gas-fueled and liquid-fueled prime movers shall be designed to meet the demands of the prime mover for all of the following factors:

(1) Sizing of fuel lines
(2) Valves, including manual shutoff
(3) Battery-powered fuel solenoids
(4) Gas regulators
(5) Regulator vent piping
(6) Flexible fuel line section
(7) Fuel line filters
(8) Fuel vaporizers (LP-Gas)
(9) Ambient temperature effect of fuel tank vaporization rates of LP-Gas where applicable

7.9.10 The fuel storage and supply lines for an EPSS shall be in accordance with this standard or with the specific authority having jurisdiction, or both.

7.9.11 All manual fuel system valves shall be of the indicating type.

7.9.12 Listed generator subbase secondary containment fuel tanks of 2498 L (660 gal) capacity and below shall be permitted to be installed outdoors or indoors without diking or remote impounding.

7.9.12.1 A minimum clearance of 0.9 m (36 in.) shall be maintained on all sides.

7.10 Exhaust System.

7.10.1 The exhaust system equipment and installation, including piping, muffler, and related accessories, shall be in accordance with NFPA 37, *Standard for the Installation and Use of*

Copyright National Fire Protection Association
Provided by IHS under license with NFPA
No reproduction or networking permitted without license from IHS
Not for Resale

Stationary Combustion Engines and Gas Turbines, and other applicable standards.

7.10.2 Exhaust system installation shall be gastight to prevent exhaust gas fumes from entering inhabited rooms or buildings and terminate in such a manner that toxic fumes cannot reenter a building or structure, particularly through windows, air ventilation inlets, or the engine air-intake system.

7.10.3* Exhaust piping shall be connected to the prime mover by means of a flexible connector and shall be independently supported thereafter so that no damaging weight or stress is applied to the engine exhaust manifold or turbocharger.

7.10.3.1 A condensate trap and drain valve shall be provided at the low point(s) of the piping unless the piping is self-draining.

7.10.3.2 Design consideration shall be given to thermal expansion and the resultant movement of the piping.

7.10.3.3 For reciprocating engines, mufflers shall be placed as close as practicable to the engine, in a horizontal position if possible.

7.10.3.4 An approved thimble(s) shall be used where exhaust piping passes through combustible walls or partitions.

7.10.3.5 For reciprocating engines, the piping shall terminate in any of the following:

(1) Rain cap
(2) Tee
(3) Ell, pointing downwind from the prevailing wind
(4) Vertically upward-oriented stack with suitable provisions for trapping and draining rain and snow water

7.10.3.6 Design consideration shall be given to the potential heat effect due to proximity to all of the following:

(1) Conduit runs
(2) Fuel piping
(3) Lighting fixtures

7.10.3.7 Design consideration shall be given to insulating the engine exhaust systems in buildings after the flexible section.

7.10.4 For maximum efficiency, operation economy, and prevention of engine damage, the exhaust system shall be designed to eliminate excessive backpressure on the engine by properly selecting, routing, and installing the piping size, connections, and muffler.

7.10.4.1 Exhaust systems shall be installed to ensure satisfactory EPS operation and meet the requirements of the manufacturer.

7.11 Protection.

7.11.1 The room in which the EPS equipment is located shall not be used for other purposes that are not directly related to the EPS. Parts, tools, and manuals for routine maintenance and repair shall be permitted to be stored in the EPS room.

7.11.2* Where fire suppression systems are installed in EPS equipment rooms or separate buildings, the following systems shall not be used:

(1) Carbon dioxide or halon systems, unless prime mover combustion air is taken from outside the structure
(2) An automatic dry chemical system, unless the manufacturers of the EPS certify that the dry chemical system cannot damage the EPS system, hinder its operation, or reduce its output

7.11.3 Where the EPS rooms or separate buildings are equipped with fire detection systems, the installation shall be in accordance with *NFPA 72, National Fire Alarm Code*.

7.11.4 Outdoor and/or rooftop Level 1 EPS installations shall be protected from lightning in accordance with applicable standards.

7.11.5* In recognized seismic risk areas, EPS and EPSS components, such as electrical distribution lines, water distribution lines, fuel distribution lines, and other components that serve the EPS, shall be designed to minimize damage from earthquakes and to facilitate repairs if an earthquake occurs.

7.11.6* For systems in seismic risk areas, the EPS, transfer switches, distribution panels, circuit breakers, and associated controls shall be capable of performing their intended function during and after being subjected to the anticipated seismic shock.

7.12 Distribution.

7.12.1 The distribution and wiring systems within EPSS shall be installed in accordance with NFPA 70, *National Electrical Code*.

7.12.2 When EPSSs are installed in health care facilities, the installation of the EPSS shall also be in compliance with NFPA 99, *Standard for Health Care Facilities*.

7.12.3 The wiring between the EPS output terminals and the first distribution overcurrent protective device terminals within the EPSS shall be located at a minimal distance to ensure system reliability and safety.

7.12.4 If the conduit's point of attachment to the EPS is on the forcing function side of the EPS vibration isolation system, a flexible conduit section(s) shall be installed between the EPS unit(s) and any of the following, so attached:

(1) The transfer switch
(2) The control and annunciator wiring
(3) Any accessory supply wiring such as jacket water heaters

7.12.4.1 Stranded wire of adequate size shall be used to minimize breakage due to vibration.

7.12.4.2 Bushings shall be installed to protect wiring from abrasion with conduit terminations.

7.12.5 All ac-powered support and accessory equipment necessary to the operation of the EPS shall be supplied from the load side of the automatic transfer switch(es), or the output terminals of the EPS, ahead of the main EPS overcurrent protection to ensure continuity of the EPSS operation and performance.

7.12.6 The starting battery units shall be located next to the prime mover starter to minimize voltage drop.

7.12.6.1 Battery cables shall be sized to minimize voltage drop in accordance with the manufacturer's recommendations and accepted engineering practices.

7.12.6.2 Battery charger output wiring shall be permanently connected to the primary side of the starter solenoid (positive) and the EPS frame (negative), or other grounding location.

7.13 Installation Acceptance.

7.13.1 Upon completion of the installation of the EPSS, the EPS shall be tested to ensure conformity to the requirements of the standard with respect to both power output and function.

--`,,`-`-`,,`,,`,`,,`---

Copyright National Fire Protection Association
Provided by IHS under license with NFPA
No reproduction or networking permitted without license from IHS
Not for Resale

7.13.2 An on-site acceptance test shall be conducted as a final approval test for all EPSSs.

7.13.2.1 For new Level 1 installations, the EPSS shall not be considered as meeting this standard until the acceptance tests have been conducted and test requirements met.

7.13.2.2 The test shall be conducted after completion of the installation with all EPSS accessory and support equipment in place and operating.

7.13.3 The authority having jurisdiction shall be given advance notification of the time at which the acceptance test is to be performed so that the authority can witness the test.

7.13.4 The EPSS shall perform within the limits specified in this standard.

7.13.4.1 The on-site installation acceptance test shall be conducted in the following manner:

(1) With the prime mover in a "cold start" condition and the emergency load at standard operating level, a primary power failure shall be initiated by opening all switches or breakers supplying the primary power to the building or facility.
(2) The test load shall be all loads that are served by the EPSS.
(3) The time delay on start shall be observed and recorded.
(4) The cranking time until the prime mover starts and runs shall be observed and recorded.
(5) The time taken to reach operating speed shall be observed and recorded.
(6) The voltage and frequency overshoot shall be recorded.
(7) The time taken to achieve a steady-state condition with all switches transferred to the emergency position shall be observed and recorded.
(8) The voltage, frequency, and amperes shall be recorded.
(9) The prime mover oil pressure and water temperature shall be recorded, where applicable.
(10) The battery charge rate shall be recorded at 5-minute intervals for the first 15 minutes, and at 15-minute intervals thereafter.
(11) The load test with building load, or other loads that simulate the intended load as specified in Section. 5.4, shall be continued for the minimum time required by Table 4.1(a) for the class, or 2 hours maximum, and load changes and the resultant effect on voltage and frequency shall be observed and recorded.
(12) When primary power is returned to the building or facility, the time delay on retransfer to primary for each switch with a minimum setting of 5 minutes shall be recorded.
(13) The time delay on the prime mover cooldown period and shutdown shall be recorded.

7.13.5 After completion of the test performed in 7.13.4.1, the prime mover shall be allowed to cool for 5 minutes.

7.13.6 A load shall be applied for a 2-hour, full-load test. The building load shall be permitted to serve as part or all of the load, supplemented by a load bank of sufficient size to provide a load equal to 100 percent of the nameplate kW rating of the EPS, less applicable derating factors for site conditions.

7.13.6.1 A unity power factor shall be permitted for on-site testing, provided that rated load tests at the rated power factor have been performed by the manufacturer of the EPS prior to shipment.

7.13.6.2 Where the EPS is a paralleled multi-unit EPS, each unit shall be permitted to be tested individually at its rating.

7.13.7 A full-load test shall be initiated immediately after the cooling time specified in 7.13.5 by any method that starts the prime mover and, immediately upon reaching rated rpm, picks up 100 percent of the nameplate kW rating on one step, less applicable derating factors for site conditions.

7.13.7.1 Where the EPS is a paralleled multi-unit EPS, each unit shall be permitted to be tested individually at its rating.

7.13.8 When the EPSS consists of paralleled EPSs, the quantity of EPSs intended to be operated simultaneously shall be tested simultaneously with building load for a 2-hour period.

7.13.9 The data specified in 7.13.4.1(4) through 7.13.4.1(10) shall be recorded at first load acceptance and every 15 minutes thereafter until the completion of the 2-hour test period.

7.13.10 Any method recommended by the manufacturer for the cycle crank test shall be utilized to prevent the prime mover from running.

7.13.10.1 The control switch shall be set at "run" to cause the prime mover to crank.

7.13.10.2 The complete crank/rest cycle specified in 5.6.4.2 and Table 5.6.4.2 shall be observed.

7.13.11 All safeties specified in 5.6.5 and 5.6.6 shall be tested as recommended by the manufacturer.

7.13.12 The following shall be made available to the authority having jurisdiction at the time of the acceptance test:

(1) Evidence of the prototype test as specified in 5.2.1.2 (for Level 1 systems)
(2) A certified analysis as specified in 5.6.10.2
(3) A letter of compliance as specified in 5.6.10.5
(4) A manufacturer's certification of a rated load test at rated power factor with the ambient temperature, altitude, and fuel grade recorded

Chapter 8 Routine Maintenance and Operational Testing

8.1* General.

8.1.1 The routine maintenance and operational testing program shall be based on all of the following:

(1) Manufacturer's recommendations
(2) Instruction manuals
(3) Minimum requirements of this chapter
(4) The authority having jurisdiction

8.1.2 Consideration shall be given to temporarily providing a portable or alternate source whenever the emergency generator is out of service.

8.2* Manuals, Special Tools, and Spare Parts.

8.2.1 At least two sets of instruction manuals for all major components of the EPSS shall be supplied by the manufacturer(s) of the EPSS and shall contain the following:

(1) A detailed explanation of the operation of the system
(2) Instructions for routine maintenance
(3) Detailed instructions for repair of the EPS and other major components of the EPSS

Copyright National Fire Protection Association
Provided by IHS under license with NFPA
No reproduction or networking permitted without license from IHS
Not for Resale

(4) An illustrated parts list and part numbers
(5) Illustrated and schematic drawings of electrical wiring systems, including operating and safety devices, control panels, instrumentation, and annunciators

8.2.2 For Level 1 systems, instruction manuals shall be kept in a secure, convenient location, one set near the equipment, and the other set in a separate location.

8.2.3 Special tools and testing devices necessary for routine maintenance shall be available for use when needed.

8.2.4 Replacement for parts identified by experience as high mortality items shall be maintained in a secure location(s) on the premises.

8.2.4.1 Consideration shall be given to stocking spare parts as recommended by the manufacturer.

8.3 Maintenance and Operational Testing.

8.3.1* The EPSS shall be maintained to ensure to a reasonable degree that the system is capable of supplying service within the time specified for the type and for the time duration specified for the class.

8.3.2 A routine maintenance and operational testing program shall be initiated immediately after the EPSS has passed acceptance tests or after completion of repairs that impact the operational reliability of the system.

8.3.2.1 The operational test shall be initiated at an automatic transfer switch and shall include testing of each EPSS component on which maintenance or repair has been performed, including the transfer of each automatic and manual transfer switch to the alternate power source, for a period of not less than 30 minutes under operating temperature.

8.3.3 A written schedule for routine maintenance and operational testing of the EPSS shall be established.

8.3.4 A permanent record of the EPSS inspections, tests, exercising, operation, and repairs shall be maintained and readily available.

8.3.4.1 The permanent record shall include the following:

(1) The date of the maintenance report
(2) Identification of the servicing personnel
(3) Notation of any unsatisfactory condition and the corrective action taken, including parts replaced
(4) Testing of any repair for the time as recommended by the manufacturer

8.3.5* Transfer switches shall be subjected to a maintenance and testing program that includes all of the following operations:

(1) Checking of connections
(2) Inspection or testing for evidence of overheating and excessive contact erosion
(3) Removal of dust and dirt
(4) Replacement of contacts when required

8.3.6 Paralleling gear shall be subject to inspection, testing, and maintenance program that includes all of the following operations:

(1) Checking of connections
(2) Inspection or testing for evidence of overheating and excessive contact erosion
(3) Removal of dust and dirt
(4) Replacement of contacts when required

8.3.7* Storage batteries, including electrolyte levels or battery voltage, used in connection with systems shall be inspected weekly and maintained in full compliance with manufacturer's specifications.

8.3.7.1 Maintenance of lead-acid batteries shall include the monthly testing and recording of electrolyte specific gravity. Battery conductance testing shall be permitted in lieu of the testing of specific gravity when applicable or warranted.

8.3.7.2 Defective batteries shall be replaced immediately upon discovery of defects.

8.3.8 A fuel quality test shall be performed at least annually using tests approved by ASTM standards.

8.4 Operational Inspection and Testing.

8.4.1* EPSSs, including all appurtenant components, shall be inspected weekly and exercised under load at least monthly.

8.4.1.1 If the generator set is used for standby power or for peak load shaving, such use shall be recorded and shall be permitted to be substituted for scheduled operations and testing of the generator set, providing the same record as required by 8.3.4.

8.4.2* Diesel generator sets in service shall be exercised at least once monthly, for a minimum of 30 minutes, using one of the following methods:

(1) Loading that maintains the minimum exhaust gas temperatures as recommended by the manufacturer.
(2) Under operating temperature conditions and at not less than 30 percent of the EPS nameplate kW rating.
(3) If the engine cannot be loaded as required in (2), the engine shall be operated until the water temperature and the oil pressure have stabilized and then the test shall be terminated before the 30 minute time period expires.

8.4.2.1 The date and time of day for required testing shall be decided by the owner, based on facility operations.

8.4.2.2 Equivalent loads used for testing shall be automatically replaced with the emergency loads in case of failure of the primary source.

8.4.2.3* Diesel-powered EPS installations that do not meet the requirements of 8.4.2 shall be exercised monthly with the available EPSS load and exercised annually with supplemental loads at 25 percent of nameplate rating for 30 minutes, followed by 50 percent of nameplate rating for 30 minutes, followed by 75 percent of nameplate rating for 60 minutes, for a total of 2 continuous hours.

8.4.2.4 Spark-ignited generator sets in service shall be exercised at least once monthly, for a minimum of 30 minutes, using one of the following methods:

(1) Loading that maintains the minimum exhaust gas temperatures as recommended by the manufacturer
(2) Under operating temperature conditions and at not less than 30 percent of the EPS nameplate kW rating

8.4.2.4.1 The date and time of day for required testing shall be decided by the owner, based on facility operations.

8.4.2.4.2 Equivalent loads used for testing shall be automatically replaced with the emergency loads in case of failure of the primary source.

Copyright National Fire Protection Association
Provided by IHS under license with NFPA
No reproduction or networking permitted without license from IHS
Not for Resale

8.4.3 The EPS test can be initiated by simulating a power outage using the test switch(es) on the ATSs or by opening a normal breaker. Opening a normal breaker shall not be required.

8.4.4 Load tests of generator sets shall include complete cold starts.

8.4.5 Time delays shall be set as follows:

(1) Time delay on start:
   (a) 1 second minimum
   (b) 0.5 second minimum for gas turbine units
(2) Time delay on transfer to emergency: no minimum required
(3) Time delay on restoration to normal: 5 minutes minimum
(4) Time delay on shutdown: 5 minutes minimum

8.4.6 Transfer switches shall be operated monthly.

8.4.6.1 The monthly test of a transfer switch shall consist of electrically operating the transfer switch from the standard position to the alternate position and then a return to the standard position.

8.4.7* EPSS circuit breakers for Level 1 system usage, including main and feed breakers between the EPS and the transfer switch load terminals, shall be exercised annually with the EPS in the "off" position.

8.4.7.1 Circuit breakers rated in excess of 600 volts for Level 1 system usage shall be exercised every 6 months and shall be tested under simulated overload conditions every 2 years.

8.4.8 The routine maintenance and operational testing program shall be overseen by a properly instructed individual.

8.4.9* Level 1 EPSS shall be tested for the duration of its assigned class *(see Section 4.2)*, for at least 4 hours, at least once within every 36 months.

8.4.9.1 The load shall be the EPSS system load running at the time of the test. The test shall be initiated by opening all switches or breakers supplying normal power to the EPSS.

8.4.9.2 A power interruption to non-EPSS loads shall not be required.

Annex A Explanatory Material

Annex A is not a part of the requirements of this NFPA document but is included for informational purposes only. This annex contains explanatory material, numbered to correspond with the applicable text paragraphs.

A.1.1.4 See NFPA 111, *Standard on Stored Electrical Energy Emergency and Standby Power Systems.*

A.1.1.5(3) See Chapter 4.

A.3.2.1 Approved. The National Fire Protection Association does not approve, inspect, or certify any installations, procedures, equipment, or materials; nor does it approve or evaluate testing laboratories. In determining the acceptability of installations, procedures, equipment, or materials, the authority having jurisdiction may base acceptance on compliance with NFPA or other appropriate standards. In the absence of such standards, said authority may require evidence of proper installation, procedure, or use. The authority having jurisdiction may also refer to the listings or labeling practices of an organization that is concerned with product evaluations and is thus in a position to determine compliance with appropriate standards for the current production of listed items.

A.3.2.2 Authority Having Jurisdiction (AHJ). The phrase "authority having jurisdiction," or its acronym AHJ, is used in NFPA documents in a broad manner, since jurisdictions and approval agencies vary, as do their responsibilities. Where public safety is primary, the authority having jurisdiction may be a federal, state, local, or other regional department or individual such as a fire chief; fire marshal; chief of a fire prevention bureau, labor department, or health department; building official; electrical inspector; or others having statutory authority. For insurance purposes, an insurance inspection department, rating bureau, or other insurance company representative may be the authority having jurisdiction. In many circumstances, the property owner or his or her designated agent assumes the role of the authority having jurisdiction; at government installations, the commanding officer or departmental official may be the authority having jurisdiction.

A.3.2.4 Listed. The means for identifying listed equipment may vary for each organization concerned with product evaluation; some organizations do not recognize equipment as listed unless it is also labeled. The authority having jurisdiction should utilize the system employed by the listing organization to identify a listed product.

A.3.3.1 Battery Certification. One such certifier of batteries is the American Association of Battery Manufacturers.

A.3.3.4 Emergency Power Supply (EPS). For rotary energy converters, components of an EPS include the following:

(1) Prime mover
(2) Cooling system
(3) Generator
(4) Excitation system
(5) Starting system
(6) Control system
(7) Fuel system
(8) Lube system, if required

The EPS includes all the related electrical and mechanical components of the proper size and/or capacity required for the generation of the required electrical power at the EPS output terminals.

A.3.3.5 Emergency Power Supply System (EPSS). See Annex B for diagrams of typical systems.

A.4.1 This standard specifies requirements for the EPSS as a complete functioning system in terms of types, classes, and levels. It is not the intent of this standard to recommend the EPSS most suitable for any given application. The terms *emergency power supply systems* and *standby power supply systems* as used in this standard include, but are not limited to, such terms as the following:

(1) Alternate power systems
(2) Standby power systems
(3) Legally required standby systems
(4) Alternate power sources

Since this standard specifies the installation, performance, maintenance, and test requirements in terms of types, classes, and levels, any of these terms might be appropriate for describing the application or use, depending on the need and the preference of the parties involved.

Copyright National Fire Protection Association
Provided by IHS under license with NFPA
No reproduction or networking permitted without license from IHS
Not for Resale

A.4.2 Selection of the class of the EPSS should take into account past outage records and fuel delivery problems due to weather, shortages, and other geographic and environmental conditions. Class "X" is a calculated value that usually represents between 48 and 96 hours of fuel for a Level 1 facility.

A.4.4 It is recognized that EPSSs are utilized in many different locations and for many different purposes. The requirement for one application might not be appropriate for other applications.

A.4.4.1 Typically, Level 1 systems are intended to automatically supply illumination or power, or both, to critical areas and equipment in the event of failure of the primary supply or in the event of danger to elements of a system intended to supply, distribute, and control power and illumination essential for safety to human life.

Level 1 systems usually supply emergency power for assembly occupancies greater than 1000 persons or in buildings above 23 m (75 ft) in height with any of the following occupancy classes: assembly, educational, detention, correctional, business, residential, and mercantile. Another occupancy typically served by Level 1 systems is health care where the combined load of the critical branch, life safety branch, and equipment system is greater than 150 kVA.

Essential electrical systems can provide power for the following essential functions:

(1) Life safety illumination
(2) Fire detection and alarm systems
(3) Elevators
(4) Fire pumps
(5) Public safety communications systems
(6) Industrial processes where current interruption would produce serious life safety or health hazards
(7) Essential ventilating and smoke removal systems

A.4.4.2 Typically, Level 2 systems are intended to supply power automatically to selected loads (other than those classed as emergency systems) in the event of failure of the primary source.

Level 2 systems typically are installed to serve loads, such as the following, that, when stopped due to any interruption of the primary electrical supply, could create hazards or hamper rescue or fire-fighting operations:

(1) Heating and refrigeration systems
(2) Communications systems
(3) Ventilation and smoke removal systems
(4) Sewage disposal
(5) Lighting
(6) Industrial processes

A.4.4.4 It is important to recognize that an EPSS might react substantially different from commercial power during transient and short circuit conditions due to the relatively small capacities of the EPSS compared to the primary commercial power source. *(See ANSI C84.1, Standard for Electric Power Systems and Equipment Voltage Ratings.)*

A.5.1.1 Examples of probability of interruption could include the following: earthquake, flood damage, or a demonstrated utility unreliability.

A.5.1.1(1) See A.5.5.3 for shelf-life precautions for fuel supplies.

A.5.1.4 On-site energy conversion is not restricted to rotating-type generating systems. Other types of continuous energy conversion systems can be used, including fuel-cell systems.

A.5.2.2 The following devices are typical of energy converters and energy sources that should be reviewed carefully as part of Level 1 EPSs:

(1) Motor-generator/engine
(2) Motor-generator/flywheel
(3) Steam turbine

Connection to the primary power source ahead of the primary source main service disconnect and a separate service should be excluded as a sole source of EPS.

A.5.4 It is recognized that in some installations part or all of the output of the EPS might be used for peak shaving or part of the output might be used for driving nonessential loads during loss of the primary power source. Load-shedding of these loads when the output of the energy converter is needed is one way of meeting the requirements of Section 5.4. The load should be reviewed to ascertain that load growth has not exceeded EPS capability.

A.5.5.2 The low-fuel alarm point for liquid-fueled engines is defined as the point when the main fuel tank contains insufficient fuel to meet the required full load operating hours and is the point at which this condition is signaled.

A.5.5.3 Consideration should be given to sizing tanks in order to meet minimum fuel supplier delivery requirements, particularly for small tanks. Consideration also should be given to oversizing tanks, because many fuels have a shelf life and deteriorate with age. Where large tanks are required, it is recommended that fuels be periodically pumped out and used in other services and replaced with fresh fuel. Prudent disaster management could require much larger on-site temporary or permanent fuel storage.

A.5.6.4.2 See Figure A.5.6.4.2 for a diagram of cranking cycles.

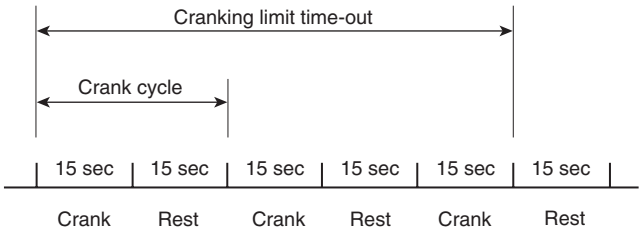

FIGURE A.5.6.4.2 Diagram of Cranking Cycles.

A.5.6.4.3 A battery unit is one or more batteries or a group of cells, a series, or a parallel series connected to provide the required battery unit voltage and capacity.

A.5.6.4.4 Cold-cranking amperes, or cranking performance, are the number of amperes a fully charged battery at −17.8°C (0°F) can continuously deliver for 30 seconds while maintaining 1.2 V per cell.

A.5.6.4.5.1 It is recommended that lead-acid starting batteries be replaced every 24 to 30 months.

A.5.6.4.6 It is intended that the battery charger be factory-built, adjusted, and approved for the specific type, construction, and capacity of the battery. For lead-acid batteries, the battery charger should be tested for the specific gravity, type, and concentration of grid alloys, such as high or low gravity, high or low antimony, calcium, or none.

Copyright National Fire Protection Association
Provided by IHS under license with NFPA
No reproduction or networking permitted without license from IHS
Not for Resale

A.5.6.5.6 For systems located outdoors, the manual shutdown should be located external to the weatherproof enclosure and should be appropriately identified.

A.5.6.9.1 See ANSI/NEMA MG1, *Standard for Motors and Generators*, and ANSI/NEMA MG2, *Safety Standard for Construction and Guide for Selection, Installation and Use of Electric Motors and Generators*.

A.5.6.10.3 Where unusual vibration conditions are anticipated, adequate isolation treatment should be supplied.

A.6.1.1 Electrical switching is electrical equipment or devices used to do any or all of the following:

(1) Transfer connected electrical loads from one power source to another
(2) Perform load-switching functions
(3) Bypass, isolate, and test the transfer switch

A.6.1.2 Electrical protection equipment is sensing and overcurrent protective devices used to protect against damage due to fault or overload to conductors and equipment connected to the output of the emergency energy source, up to and including the load terminals of the transfer switch(es).

A.6.1.6 See Section 700.6 of NFPA 70, *National Electrical Code*, and 10.8.2 of NFPA 20, *Standard for the Installation of Stationary Pumps for Fire Protection*, for listing and installation requirements for transfer switches used with fire pumps.

A.6.2.1 For most applications in this standard, the automatic transfer switch is used to transfer a load from a primary source of supply to an engine generator set.

An automatic transfer switch might include circuit breakers, contactors, switches, or vacuum and solid-state power devices operating in conjunction with automatic-sensing and logic devices to perform the defined function.

A.6.2.2.1 Where special loads require more rapid detection of power loss, underfrequency monitoring also might be provided. Upon frequency decay below the lower limit necessary for proper operation of the loads, the transfer switch should automatically initiate transfer to the alternate source. *(See A.6.2.15.)*

A.6.2.2.1(2) See 6.2.5 and 6.2.7.

A.6.2.4 Authorized personnel should be available and familiar with manual operation of the transfer switch and should be capable of determining the adequacy of the alternate source of power prior to manual transfer.

A.6.2.5 For most applications, a nominal delay of 1 second is adequate. The time delay should be short enough so that the generator can start and be on the line within the time specified for the type classification.

A.6.2.8 It is recommended that the timer for delay on retransfer to the primary source be set for 30 minutes. The 30-minute recommendation is to establish a "normalized" engine temperature, when it is beneficial for the engine. NFPA 70, *National Electrical Code*, establishes a minimum time requirement of 15 minutes.

A.6.2.13 For maintenance purposes, consideration should be given to a transfer switch counter.

A.6.2.15 Automatic transfer switches (ATSs) can be provided with accessory controls that provide a signal to operate remote motor controls that disconnect motors prior to transfer and to reconnect them after transfer when the residual voltage has been substantially reduced. Another method is to provide in-phase monitors within the ATS in order to prevent retransfer to the primary source until both sources are nearly synchronized. A third method is to use a programmed neutral position transfer switch. See Section 230.95 of NFPA 70, *National Electrical Code*.

A.6.2.16 Standards for nonautomatic transfer switches are similar to those for automatic transfer switches, as defined in 3.3.9.1 and 3.3.9.3, with the omission of automatic controls.

A.6.4.3 See Section 700.3 of NFPA 70, *National Electrical Code*.

A.6.4.4 Consideration should be given to the effect that load interruption could have on the load during maintenance and service of the transfer switch.

A.6.5.1 It is important that the various overcurrent devices be coordinated, as far as practicable, to isolate faulted circuits and to protect against cascading operation on short circuit faults. In many systems, however, full coordination is not practicable without using equipment that could be prohibitively costly or undesirable for other reasons. Primary consideration also should be given to prevent overloading of equipment by limiting the possibilities of large current inrushes due to instantaneous reestablishment of connections to heavy loads.

A.6.5.3 See 9.6.5 of NFPA 20, *Standard for the Installation of Stationary Pumps for Fire Protection*.

A.7.1.1 The performance of the EPS and the EPSS is dependent on many factors, one of which is correct initial installation, primarily as the installation relates to the location and environmental conditions. Although this standard is not intended to serve as a design standard for EPSS installation and environmental considerations, certain minimum standards are recognized as essential for successful start-up and performance, safe operation, and utilization of the EPSS where required.

A.7.1.2 The environmental conditions to be considered in the EPSS design should include, but not be limited to, heating, ventilating, and air-conditioning systems; protection from floods, fire, vandalism, wind, earthquakes, lightning, and other similar or applicable environmental conditions common to geographic locations; and other factors affecting the location of the EPSS equipment.

The probability and frequency of power failures that do or can occur as a result of lightning, wind, and rain produced by thunderstorms, hurricanes, tornadoes, and similar weather conditions associated with the user's geographic location should be considered.

A.7.2.2 The intent of this requirement is to provide maximum fire protection to the most critical, high energy systems. Consideration should be given to the potential fire hazard when locating Level 2 EPSS equipment in the normal electrical service room, or to Level 1 systems below 1000 amperes and 150 volts to ground.

A.7.2.3 EPSS equipment should be located above known previous flooding elevations where possible.

A.7.2.4 When installing the EPSS equipment and related auxiliaries, environmental considerations should be given, particularly with regard to the installation of the fuel tanks and exhaust lines, or the EPS building, or both.

Copyright National Fire Protection Association
Provided by IHS under license with NFPA
No reproduction or networking permitted without license from IHS
Not for Resale

To protect against disruption of power in the facility, it is recommended that the transfer switch be located as close to the load as possible. The following are examples of external influences:

(1) Natural conditions
  (a) Storms
  (b) Floods
  (c) Earthquakes
  (d) Tornadoes
  (e) Hurricanes
  (f) Lightning
  (g) Ice storms
  (h) Wind
  (i) Fire
(2) Human-caused conditions
  (a) Vandalism
  (b) Sabotage
  (c) Other similar occurrences
(3) Material and equipment failures

For natural conditions, EPSS design should consider the "100-year storm" flooding level or the flooding level predicted by the Sea, Lake, and Overland Surges from Hurricanes (SLOSH) models for a Class 4 hurricane.

A.7.3.3 Where units housed outdoors are used, it is recommended that a flashlight or battery-powered light with a flexible cord be maintained in the housing.

A.7.5 Generally, integral rubber vibration isolators are used on the rotating energy converters, and spring-type or pad-type isolators are used on the larger energy converter units. In some cases, high deflection spring-type isolators should be used where a high degree of vibration attenuation is required. The EPS manufacturer should be consulted during consideration of the specific type of vibration control. Inertia bases should be considered where unusual vibration conditions are anticipated.

A.7.6 Generally, exhaust noises can be attenuated by using the proper mufflers. The mufflers used should be in accordance with the EPS manufacturer's recommendations. Depending on the degree of silencing required, the muffler should be rated accordingly for "commercial," "semicritical," and "critical" (high degree of silencing) service. To attenuate other noises, line-of-sight barriers having acoustical treatment or total acoustical enclosures can be used. The EPS should be installed away from critical areas.

A.7.7.1 During operation, EPS and related equipment reject considerable heat that needs to be removed by proper ventilation or air-cooling. In some cases, outdoor installations rely on natural air circulation, but enclosed installations need properly sized, properly positioned ventilation facilities, to prevent recirculation of cooling air. The optimum position of air-supply louvers and radiator air discharge is on opposite walls, both to the outdoors.

A.7.8.2 It should be recognized that the reliability of municipal water-cooling is strictly dependent upon the reliability of the water utility. It should also be recognized that, during such natural disasters as earthquakes and floods, the water supply can be interrupted simultaneously with the primary electric power supply. Methods of cooling the energy converter(s) consist of radiator cooling, either unit-mounted or remote, utility-furnished (city) water-cooling, heat exchangers, and air-cooling.

A.7.9.1.2 Commercial distillate fuel oils used in modern diesel engines are subject to various detrimental effects. The origin of the crude oil, refinement processing techniques, time of year, and geographical consumption location all aid in the determination of fuel blend formulas. Sulfur, naturally occurring gums, waxes, soluble metallic soaps, water, dirt, and temperature all begin to degrade fuel as it is handled and stored. These effects begin at the time of fuel refinement and continue until consumption.

Proper fuel storage is critical to engine start-up, efficiency, and longevity. Storage tanks should be kept water-free and have provisions for drainage on a scheduled basis. Water can contribute to steel tank corrosion and the potential development of microbiological growth where fuel and water interface. Copper and its alloys, along with zinc or zinc coatings, should be avoided in fuel-handling systems. These elements can react with fuel to form certain gels or organic acids, resulting in clogging of filters or further system corrosion. Stable storage temperatures are conducive to fuel health. Tanks that are aboveground and subject to extreme daily temperature variations cause fuel to degrade more rapidly. This is further exacerbated with large aboveground tanks that are less than full. Airspace allows for condensation that can further add to the contaminant levels. Reflective exterior tank coatings reduce but do not eliminate the solar heating effect.

Scheduled fuel maintenance and testing help to reduce or nearly eliminate fuel contamination. Fuel maintenance filtration can remove contaminants and water and return fuel to conditions where it will provide reliability and efficiency for standby generators when called upon in emergency conditions. Fuel maintenance and testing should begin the day of installation and first fill to establish a benchmark guideline for further comparison. Fuel monitoring and testing services are available nationwide from many companies.

A.7.9.6 See NFPA 37, *Standard for the Installation and Use of Stationary Combustion Engines and Gas Turbines*; NFPA 54, *National Fuel Gas Code*; and NFPA 58, *Liquefied Petroleum Gas Code*.

A.7.9.7 Valving for natural gas–fueled prime movers should be configured so that the gas supply to the prime mover cannot be inadvertently or intentionally shut off by anyone other than qualified personnel such as the gas supplier. If valves are placed in an isolated area, a secure area or locking the valve(s) open is recommended.

A.7.10.3 Consideration should also be given to utilizing dampening supports where it is necessary to reduce exhaust noise vibration transmission.

A.7.11.2 If a fire suppression system is used in EPS rooms or separate buildings housing EPS equipment, consideration should be given to preaction-type suppression systems.

A.7.11.5 Consideration should be given to the location of the EPS equipment, both as it relates to the building structure and to the effects of an earthquake.

All emergency power equipment support or subsupport systems should be designed and constructed so that they can withstand static or anticipated seismic forces, or both, in any direction, with the minimum force value used being equal to the equipment weight.

Bolts, anchors, hangers, braces, and other restraining devices should be provided to limit earthquake-generated differential movements between the EPS nonstructural equipment and the building structure. However, the degree of isolation required for vibration and acoustical control of the EPS equipment and other equipment should be maintained.

Copyright National Fire Protection Association
Provided by IHS under license with NFPA
No reproduction or networking permitted without license from IHS
Not for Resale

Suspended items such as piping, conduit, ducts, and other auxiliary equipment related to the EPSS should be braced in two directions to resist swaying and excessive movement in earthquake risk areas.

Battery racks for EPS equipment and electrical items or related auxiliaries, or both, should be designed to resist internal damage and damage at the equipment supports resulting from earthquake-generated motion. Battery racks should be capable of withstanding seismic forces equal to the supported weight in any direction. Batteries should be restrained to their support to prevent vibration damage, and electrical interconnections should be provided with adequate slack to accommodate all relative deflections.

Transfer switch enclosures should be mounted so that their anchors and support structures can withstand static forces equal to the anticipated seismic shock in any direction.

Transfer switch components should be of the type that resist malfunction during dynamic excitation and should be designed to resist the anticipated seismic shock.

Where possible, EPS equipment and associated cooling systems and controls should be mounted on a single frame. The frame, in turn, should be rigidly attached to its foundation so that its anchorage can withstand static forces equal to the equipment weight in any direction. Where engine generator sets and associated cooling systems' controls cannot be mounted as an integral unit, each should be secured to meet the floating requirements previously described. Equipment not using the preferred rigid mounting should have vibration isolators with restraints capable of withstanding static forces equal to twice the weight of the supported equipment in any direction. In addition, interconnecting power, fuel, and cooling lines should be provided with adequate flexibility to allow maximum anticipated excursions without damage.

Appendages to the EPS equipment, such as day tanks, should be mounted to withstand static forces equal to the anticipated seismic shock in any direction.

A.7.11.6 Seismic shock should be simulated at the factory or in a testing laboratory on a prototype unit. Simulation should consist of a test(s) approximating actual time-history records of known seismic shocks applied to the equipment under test. Subassemblies of the total equipment could be tested separately where it is neither practical nor feasible to test the complete unit.

A.8.1 The continuing reliability and integrity of the EPSS are dependent on an established program of routine maintenance and operational testing.

A.8.2 Where adequately secured from public access, it is desirable to locate an instruction manual, special tools and testing devices, and spare parts in the room in which the EPS is located. The articles should be mounted at a convenient location on a wall and should be enclosed in a metal or other suitable cabinet. The cabinet should accommodate the instruction manual on the inside of the door.

A.8.3.1 The suggested maintenance procedure and frequency should follow those recommended by the manufacturer. In the absence of such recommendations, Figure A.8.3.1(a) and Figure A.8.3.1(b) indicate alternate suggested procedures.

A.8.3.5 Where sealed devices are used, replacement of the complete device might be necessary. Maintenance should be performed according to manufacturer's recommendations. In the absence of such recommendations, the list given in 8.3.5 suggests minimal procedures.

Transfer switches should be subjected to an annual maintenance program including (one) major maintenance and (three) quarterly inspections. Programs should include all of the following operations. Note: Due to the critical nature of these devices, permission should be gained to perform these tasks since some of the following recommendations could cause disruption of power to the load. The following tasks should be carefully reviewed with facility management personnel to ensure agreement and plan for contingencies.

Major Maintenance.

(1) Check connections.
   (a) A thermographic or temperature scan should be done prior to this visit while the ATS is under normal (peak) load. This thermographic scan should be repeated during the EPSS load test. Results should be available to the maintenance provider so that suspect conditions can be addressed during this activity.
   (b) With power connected to the normal source, measure and record millivolt drop levels across each pole. Note: Any reading that is greater than 25 percent of the average of all poles should be carefully inspected when the ATS is de-energized.
   (c) With power connected to the emergency source, measure and record millivolt drop levels across each pole. Note: Any reading that is greater than 25 percent of the average of all poles should be carefully inspected when the ATS is de-energized.
   (d) If the ATS is equipped with a bypass isolation feature, operate the bypass to the connected source (emergency or normal) and repeat the steps in (a), (b), and (c). Levels should drop to approximately 50 percent of initial levels and be uniform relative to initial readings. This step verifies that the bypass feature is properly connected and that the connected load will not be affected when the automatic portion is isolated for maintenance.
   (e) With power secured and both the emergency and normal sources properly locked out and tagged out, measure the micro-ohm resistance levels across the following connection points:
      i. Emergency source cabling lug to bus
      ii. Normal source cabling lug to bus
      iii. Load cabling lug to bus
      iv. Neutral cabling lug to bus
      v. Load connected to normal across each pole
      vi. Load connected to emergency across each pole

   Notes: If the ATS is equipped with an isolation bypass and the bypass remains energized, perform these tests on the isolated transfer switch unit only. DO NOT APPLY DIGITAL LOW RESISTANCE OHMMETER (DLRO) TO ENERGIZED CIRCUITS.

   Any value greater than 20 percent of the average value of all similar type connections requires further investigation.
(2) Inspect or test for evidence of overheating or excessive contact corrosion.
   (a) With power from both sources secured and properly locked out and tagged out, remove all protective pole covers and arc chutes.

Copyright National Fire Protection Association
Provided by IHS under license with NFPA
No reproduction or networking permitted without license from IHS
Not for Resale

(b) Carefully inspect main contacts and other current-carrying parts for signs of corrosion or overheating. Note: Observation should correlate with previous results (i.e., thermographic or temperature evidence of higher than normal temperatures or heat migration, abnormal millivolt drop readings as previously noted, or abnormal micro-ohm (DLRO) readings as previously noted).
(c) Carefully inspect insulating materials or standoff insulators for signs of contamination (i.e., dirt, grime, oil, etc.). The combination of contaminants and possible introduction of high humidity or moisture could lead to insulation breakdown and subsequent destructive faults. Clean contaminated surfaces with a solvent approved for this purpose.
(d) Inspect control connection, plugs, and harnesses for signs of corrosion, heat, contamination, and so forth.
(e) Using a vacuum, remove all dust and debris from the ATS cabinet, transfer switch mechanism, bus, and so forth. Note: Never use compressed air to blow out dust. Doing so can blow dust and debris into controls and the transfer switch mechanism.
(f) Inspect cabinets for proper sealing. Open conduit knockouts or other penetrations should be properly sealed to prevent the introduction of dust, moisture, or other alien matter. Enclosures installed outside should be inspected for proper seal and appropriate gasketing. Ensure that enclosure door securing devices are intact and properly secured.
(g) Replace and secure all protective pole covers and chutes. Remove lockout devices and resupply normal power. If the ATS is of the bypass isolation type, reconnect the transfer switch mechanism. Observe proper manufacturer's procedures.

(3) Verify control and feature setpoints and operation.
(a) Measure and record the following data and setpoints:
i. Normal source voltage phase to phase, phase to ground, and phase to neutral
ii. Engine start time (from crank start to source available light or relay pickup)
iii. Emergency source voltage phase to phase, phase to ground, and phase to neutral
iv. Load current each phase
v. Momentary override normal deviation where provided
vi. Transfer time delay where provided
vii. Return to normal source time delay where provided
viii. Engine cooldown where provided
(b) If the connection is to a multiple-source EPS, verify the load priority of the ATS being tested and confirm this is correct given the criticality of the connected load.
(c) Verify proper operation of all indicator lights and meters and controls.
(d) Return ATS to normal service.

Quarterly Inspections.

(1) Visually inspect the transfer switch control mechanism, control panel, harnesses, and cable connections for signs of moisture, corrosion, or heating.
(2) Measure and record the following data and setpoints:
(a) Normal source voltage phase to phase, phase to ground, and phase to neutral
(b) Engine start time (from crank start to source available light or relay pickup)
(c) Emergency source voltage phase to phase, phase to ground, and phase to neutral
(d) Load current each phase
(e) Momentary override normal deviation where provided
(f) Transfer time delay where provided
(g) Return to normal source time delay where provided
(h) Engine cooldown where provided
(3) If the connection is to a multiple-source EPS, verify the load priority of the ATS being tested and confirm this is correct given the criticality of the connected load.
(4) Verify proper operation of all indicator lights and meters and controls.
(5) Inspect cabinets for proper sealing. Open conduit knockouts or other penetrations should be properly sealed to prevent the introduction of dust, moisture, or other alien matter. Enclosures installed outside should be inspected for proper seal and appropriate gasketing. Ensure that enclosure door securing devices are intact and properly secured.
(6) Perform a load test using the test switch if permitted. Note: This will cause the emergency power source to start and the ATS to transfer. Be sure to gain permission from the facility management prior to performing this test.

A.8.3.7 A battery load test should be performed quarterly.

A.8.4.1 See Figure A.8.4.1(a) and Figure A.8.4.1(b).

A.8.4.2 Light loading creates a condition termed *wet stacking*, indicating the presence of unburned fuel or carbon, or both, in the exhaust system. Its presence is readily indicated by the presence of continual black smoke during engine-run operation. The testing requirements of 8.4.2 are intended to reduce the possibility of wet stacking. If equivalent loads are used for exercising, it is suggested that all essential loads be energized first, with the equivalent load used only to supplement the test. If the normal power were to fail during the exercise period, it would negate the urgency to automatically remove the equivalent load as described at 8.4.2.2.

A.8.4.2.2.3 The EPS should be exercised for the duration of its assigned class *(see Section 4.2)*, or for a duration agreed to by the authority having jurisdiction not to exceed 6 hours, at least once annually under the conditions required by this section.

The intent of this requirement is to provide reasonable assurance that the EPS with all of its auxiliary subsystems is capable of running for the duration of its assigned class.

A.8.4.7 Circuit breakers should be tested under simulated overload conditions every 2 years.

A.8.4.9 The intent of this requirement is to provide reasonable assurance that the EPSS with all of its auxiliary subsystems is capable of running for the duration of its assigned class with its running load. A full facility power outage is not intended for this test but is recommended where a total facility power outage has not occurred within the last 36 months. Supplemental load banks are not required. After the test, the fuel supply should be replenished if necessary.

Copyright National Fire Protection Association
Provided by IHS under license with NFPA
No reproduction or networking permitted without license from IHS
Not for Resale

Maintenance Schedule

Component (as applicable)	Procedure (X — Action, R — Replace, if needed)					Frequency (W — Weekly, M — Monthly, Q — Quarterly, S — Semiannually, A — Annually, Nos. indicate hours)	
	Visual Inspection	Check	Change	Clean	Test	Level 1	Level 2
1. Fuel							
(a) Main supply tank level		X				W	M
(b) Day tank level	X	X				W	M
(c) Day tank float switch	X				X	W	Q
(d) Supply or transfer pump operation	X				X	W	Q
(e) Solenoid valve operation	X				X	W	Q
(f) Strainer, filter, dirt leg, or combination				X		Q	Q
(g) Water in system		X		X		W	Q
(h) Flexible hose and connectors	X		R			W	M
(i) Tank vents and overflow piping unobstructed		X			X	A	A
(j) Piping	X					A	A
(k) Gasoline in main tank (when used)			R			A	A
2. Lubrication System							
(a) Oil level	X	X				W	M
(b) Oil change			R			50 or A	50 or A
(c) Oil filter(s)			R			50 or A	50 or A
(d) Lube oil heater		X				W	M
(e) Crankcase breather	X		R	X		Q	S
3. Cooling System							
(a) Level	X	X				W	M
(b) Antifreeze protection level					X	S	A
(c) Antifreeze			R			A	A
(d) Adequate cooling water to heat exchanger		X				W	M
(e) Rod out heat exchanger				X		A	A
(f) Adequate fresh air through radiator		X				W	M
(g) Clean exterior of radiator				X		A	A
(h) Fan and alternator belt	X	X				M	Q
(i) Water pump(s)	X					W	Q
(j) Condition of flexible hoses and connection	X	X				W	M
(k) Jacket water heater		X				W	M
(l) Inspect duct work, clean louvers	X	X		X		A	A
(m) Louver motors and controls	X			X	X	A	A
4. Exhaust System							
(a) Leakage	X	X				W	M
(b) Drain condensate trap		X				W	M

© 2005 National Fire Protection Association (NFPA 110, p. 1 of 3)

FIGURE A.8.3.1(a) Suggested Maintenance Schedule for Emergency Power Supply Systems.

--`,,`,,`-`-`,,`,,`,`,,`---

Copyright National Fire Protection Association
Provided by IHS under license with NFPA
No reproduction or networking permitted without license from IHS
Not for Resale

Maintenance Schedule *(continued)*

Component (as applicable)	Procedure (X — Action, R — Replace, if needed)					Frequency (W — Weekly, M — Monthly, Q — Quarterly, S — Semiannually, A — Annually, Nos. indicate hours)	
	Visual Inspection	Check	Change	Clean	Test	Level 1	Level 2
(c) Insulation and fire hazards	X					Q	Q
(d) Excessive backpressure					X	A	A
(e) Exhaust system hangers and supports	X					A	A
(f) Flexible exhaust section	X					S	S
5. Battery System							
(a) Electrolyte level		X				W	M
(b) Terminals clean and tight	X	X				Q	Q
(c) Remove corrosion, case exterior clean and dry	X			X		M	M
(d) Specific gravity or state of charge					X	M	M
(e) Charger and charge rate	X					M	M
(f) Equalize charge		X				M	M
6. Electrical System							
(a) General inspection	X					W	M
(b) Tighten control and power wiring connections		X				A	A
(c) Wire chafing where subject to movement	X	X				Q	S
(d) Operation of safeties and alarms		X			X	S	S
(e) Boxes, panels, and cabinets				X		S	S
(f) Circuit breakers, fuses Note: Do not break manufacturer's seals or perform internal inspection on these devices.	X	X	R	X	X	M	A
(g) Transfer switch main contacts	X			X		A	A
(h) Calibration of voltage-sensing relays/devices		X			X	A	A
(i) Wire insulation breakdown					X	5/500[a]	3/500[b]
7. Prime Mover							
(a) General inspection	X					W	M
(b) Service air cleaner			R	X		S	S
(c) Governor oil level and linkage	X	X				M	M
(d) Governor oil			R			A	A
(e) Ignition system — plugs, points, coil, cap, rotor, secondary wire insulation	X	X	R	X	X	A	A
(f) Choke setting and carburetor adjustment		X				S	S
(g) Injector pump and injectors for flow rate pressure and/or spray pattern					X	A	A
(h) EPS at minimum of 80% nameplate rating					X	3/4[c]	3/4[c]

© 2005 National Fire Protection Association (NFPA 110, p. 2 of 3)

FIGURE A.8.3.1(a) ***Continued***

--`,,,``-`-`,,`,,`,`,,`---

Copyright National Fire Protection Association
Provided by IHS under license with NFPA
No reproduction or networking permitted without license from IHS
Not for Resale

Maintenance Schedule *(continued)*

Component (as applicable)	Procedure (X — Action, R — Replace, if needed): Visual Inspection	Check	Change	Clean	Test	Frequency (W — Weekly, M — Monthly, Q — Quarterly, S — Semiannually, A — Annually, Nos. indicate hours): Level 1	Level 2
(i) Valve clearance					X	3/500[b]	3/500[b]
(j) Torque bolts					X	3/500[b]	3/500[b]
8. Generator							
(a) Brush length, appearance, free to move in holder	X	X		X		S	S
(b) Commutator and slip rings	X			X		A	A
(c) Rotor and stator	X			X		A	A
(d) Bearing(s)	X		R			A	A
(e) Bearing grease		X	R			A	A
(f) Exciter	X	X		X		A	A
(g) Voltage regulator	X	X		X		A	A
(h) Measure and record resistance readings of windings with insulation tester (Megger)					X	A	A
9. (a) General condition of EPSS, any unusual condition of vibration, leakage, noise, temperature, or deterioration	X			X		W	M
(b) Service room or housing housekeeping	X			X		W	M
10. Restore system to automatic operation condition	X					W	M

[a] Every 5 years or 500 hours
[b] Every 3 years or 500 hours
[c] Every 3 years for 4 hours

© 2005 National Fire Protection Association (NFPA 110, p. 3 of 3)

FIGURE A.8.3.1(a) ***Continued***

--`,,`-`-`,,`,,`,`,,`---
Copyright National Fire Protection Association
Provided by IHS under license with NFPA
No reproduction or networking permitted without license from IHS
Not for Resale

Maintenance Log

Frequency
W — Weekly S — Semiannually
M — Monthly A — Annually
Q — Quarterly Nos. indicate hours

Performed by

Component	Service Frequency Level 1	Service Frequency Level 2	Date / Fill in Appropriate Readings
1. Fuel			
(a) Main supply tank level	W	M	
(b) Day tank level	W	M	
(c) Day tank float switch	W	Q	
(d) Supply or transfer pump operation	W	Q	
(e) Solenoid valve operation	W	Q	
(f) Strainer, filter, dirt leg, or combination	Q	Q	
(g) Water in system	W	Q	
(h) Flexible hose and connectors	A	A	
(i) Tank vents and overflow piping unobstructed	A	A	
(j) Piping	A	A	
(k) Gasoline in main tank (when used)	A	A	
2. Lubrication System			
(a) Oil level	W	M	
(b) Oil change	50 or A	50 or A	
(c) Oil filter(s)	50 or A	50 or A	
(d) Lube oil heater	W	M	
(e) Crankcase breather	Q	S	
3. Cooling System			
(a) Level	W	M	
(b) Antifreeze protection level	S	A	
(c) Antifreeze	A	A	
(d) Adequate cooling water to heat exchanger	W	M	
(e) Rod out heat exchanger	A	A	
(f) Adequate fresh air through radiator	W	M	
(g) Clean exterior of radiator	A	A	
(h) Fan and alternator belt	M	Q	
(i) Water pump(s)	W	Q	
(j) Condition of flexible hoses and connection	W	M	
(k) Jacket water heater	W	M	
(l) Inspect duct work, clean louvers	A	A	
(m) Louver motors and controls	A	A	
4. Exhaust System			
(a) Leakage	W	M	
(b) Drain condensate trap	W	M	

© 2005 National Fire Protection Association (NFPA 110, p. 1 of 3)

FIGURE A.8.3.1(b) Sample Maintenance Log — Routine Maintenance, Operation, and Testing (RMOT).

Copyright National Fire Protection Association
Provided by IHS under license with NFPA
No reproduction or networking permitted without license from IHS
Not for Resale

Maintenance Log *(continued)*

Frequency
W — Weekly S — Semiannually
M — Monthly A — Annually
Q — Quarterly Nos. indicate hours

Component	Service Frequency Level 1	Service Frequency Level 2	Performed by / Date / Fill in Appropriate Readings
(c) Insulation and fire hazards	Q	Q	
(d) Excessive backpressure	A	A	
(e) Exhaust system hangers and supports	A	A	
(f) Flexible exhaust section	S	S	
5. Battery System			
(a) Electrolyte level	W	M	
(b) Terminals clean and tight	Q	Q	
(c) Remove corrosion, case exterior clean and dry	M	M	
(d) Specific gravity or state of charge	M	M	
(e) Charger and charge rate	M	M	
(f) Equalize charge	M	M	
6. Electrical System			
(a) General inspection	W	M	
(b) Tighten control and power wiring connections	A	A	
(c) Wire chafing where subject to movement	Q	S	
(d) Operation of safeties and alarms	S	S	
(e) Boxes, panels, and cabinets	S	S	
(f) Circuit breakers, fuses Note: Do not break manufacturer's seals or perform internal inspection on these devices.	2 or M	2 or A	
(g) Transfer switch main contacts	A	A	
(h) Calibration of voltage-sensing relays/devices	5 or A	5 or A	
(i) Wire insulation breakdown	5/500[a]	3/500[b]	
7. Prime Mover			
(a) General inspection	W	M	
(b) Service air cleaner	S	S	
(c) Governor oil level and linkage	M	M	
(d) Governor oil	A	A	
(e) Ignition system — plugs, points, coil, cap, rotor, secondary wire insulation	A	A	
(f) Choke setting and carburetor adjustment	S	S	
(g) Injector pump and injectors for flow rate pressure and/or spray pattern	A	A	
(h) EPS at minimum of 80% nameplate rating	3/4[c]	3/4[c]	

© 2005 National Fire Protection Association (NFPA 110, p. 2 of 3)

FIGURE A.8.3.1(b) ***Continued***

--`,,,```-`-`,,`,,`,`,,`---
Copyright National Fire Protection Association
Provided by IHS under license with NFPA
No reproduction or networking permitted without license from IHS
Not for Resale

Maintenance Log *(continued)*

Frequency
W — Weekly S — Semiannually
M — Monthly A — Annually
Q — Quarterly Nos. indicate hours

Component	Service Frequency		Performed by / Date / Fill in Appropriate Readings												
	Level 1	Level 2													
(i) Valve clearance	3/500[b]	3/500[b]													
(j) Torque bolts	3/500[b]	3/500[b]													
8. Generator															
(a) Brush length, appearance, free to move in holder	W	M													
(b) Commutator and slip rings	S	S													
(c) Rotor and stator	A	A													
(d) Bearing(s)	A	A													
(e) Bearing grease	A	A													
(f) Exciter	A	A													
(g) Voltage regulator	A	A													
(h) Measure and record resistance readings of windings with insulation tester (Megger)	A	A													
9. (a) General condition of EPSS, any unusual condition of vibration, leakage, noise, temperature, or deterioration	W	M													
(b) Service room or housing housekeeping	W	M													
10. Restore system to automatic operation condition	W	M													

[a] Every 5 years or 500 hours
[b] Every 3 years or 500 hours
[c] Every 3 years for 4 hours

© 2005 National Fire Protection Association (NFPA 110, p. 3 of 3)

FIGURE A.8.3.1(b) ***Continued***

Copyright National Fire Protection Association
Provided by IHS under license with NFPA
No reproduction or networking permitted without license from IHS
Not for Resale

Operation and Testing Log

Item*	Performed by / Date / Fill in Appropriate Readings
1. Maintenance schedule	
2. RTM	
3. Power fail	
4. T/D start	
5. Crank time	
6. Transfer	
7. (a) ac voltage	
(b) Hz	
(c) ac amperage	
8. (a) Oil pressure	
(b) dc amperage	
9. (a) Oil pressure	
(b) dc amperage	
(c) W/A temp.	
10. Restore normal	
11. (a) Oil pressure	
(b) dc amperage	
(c) W/A temp.	
(d) ac voltage	
(e) Hz	
(f) ac amperage	
12. T/D retransfer	
13. T/D stop	
14. Auto mode	

Comments

* See Suggested Operation and Testing Procedures for explanation of items.

© 2005 National Fire Protection Association

FIGURE A.8.4.1(a) Sample Operation and Testing Log for Rotating Equipment.

Copyright National Fire Protection Association
Provided by IHS under license with NFPA
No reproduction or networking permitted without license from IHS
Not for Resale

Suggested Operation and Testing Procedures

Item*	Procedure
1.	Perform maintenance per Maintenance Schedule
2.	Record running time meter (RTM) reading at start and end of test.
3.	Simulate normal power failure from a "cold start" by use of the test switch in automatic transfer switch or by opening normal power supply to EPSS.
4.	Observe and record time delay (T/D) on start.
5.	Record cranking time (terminates when engine starts).
6.	Transfer load to EPS.
7.	Record ac voltage, frequency, amperage.
8.	Record initial oil pressure and battery-charging rate.
9.	Record oil pressure, battery-charging rate, and water or air temperature after 15 minutes running time.
10.	Return test switch to normal or reestablish normal power supply at such time to cause a minimum running time of 30 minutes under load.
11.	Record prime mover and ac instruments just prior to transfer.
12.	Record time delay on retransfer.
13.	Record time delay on shutdown for units so equipped.
14.	Place unit in automatic operation mode.

*See Operation and Testing Log.

FIGURE A.8.4.1(b) Operation and Testing Procedures Suggested for Rotating Equipment.

Annex B Diagrams of Typical Systems

This annex is not a part of the requirements of this NFPA document but is included for informational purposes only.

B.1 Typical Power Supply Systems. See Figure B.1(a) through Figure B.1(d) for examples.

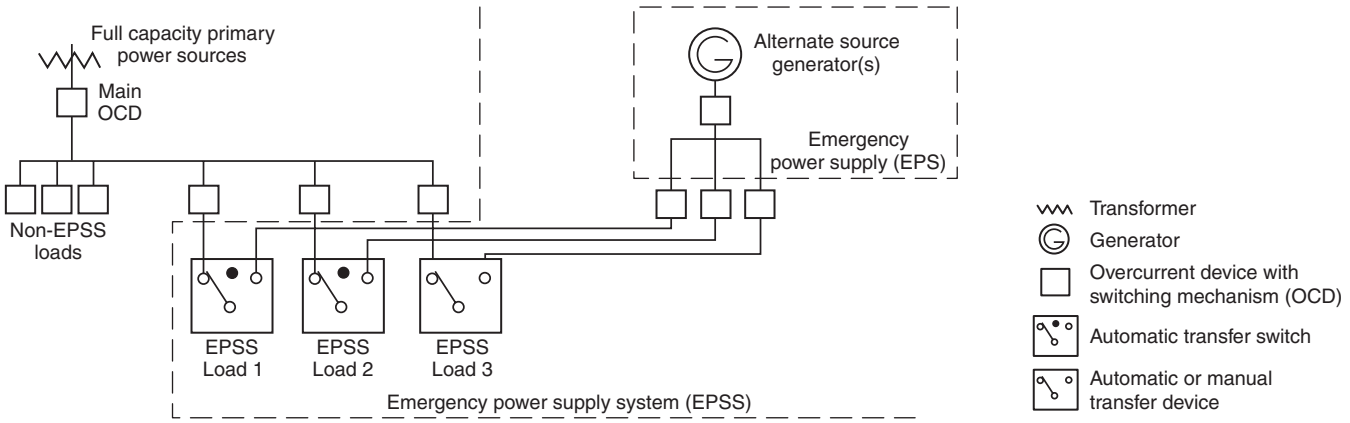

FIGURE B.1(a) Typical Rotating Emergency Power Supply System.

Copyright National Fire Protection Association
Provided by IHS under license with NFPA
No reproduction or networking permitted without license from IHS
Not for Resale

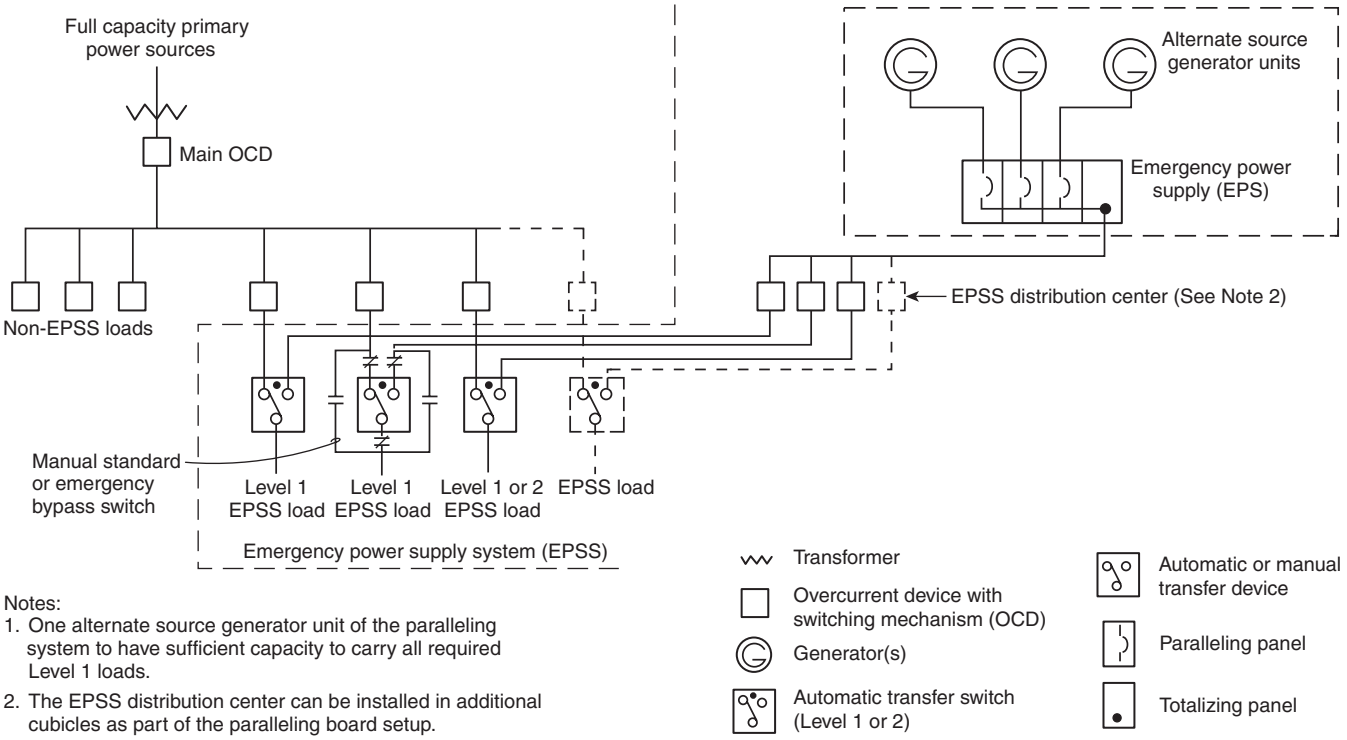

Notes:
1. One alternate source generator unit of the paralleling system to have sufficient capacity to carry all required Level 1 loads.
2. The EPSS distribution center can be installed in additional cubicles as part of the paralleling board setup.

FIGURE B.1(b) Typical Multiple-Unit Emergency Power Supply System.

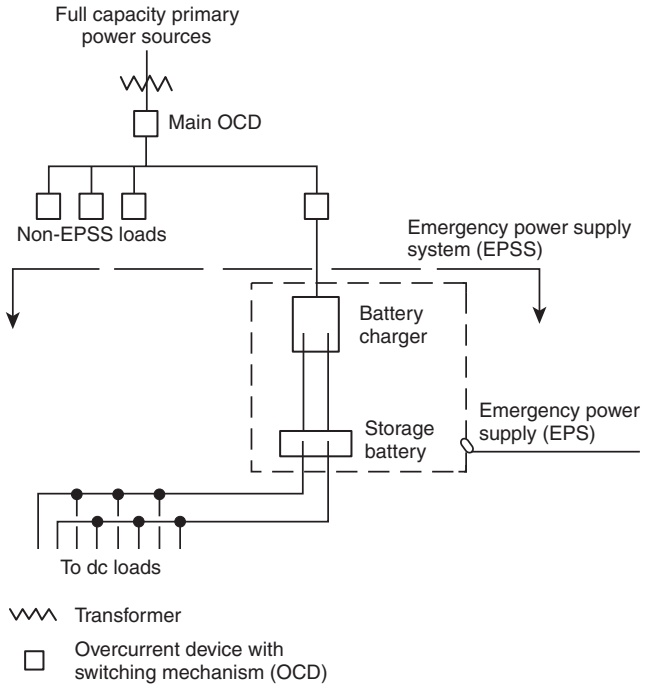

FIGURE B.1(c) Typical Uninterruptible Power Supply (UPS) System.

Copyright National Fire Protection Association
Provided by IHS under license with NFPA
No reproduction or networking permitted without license from IHS
Not for Resale

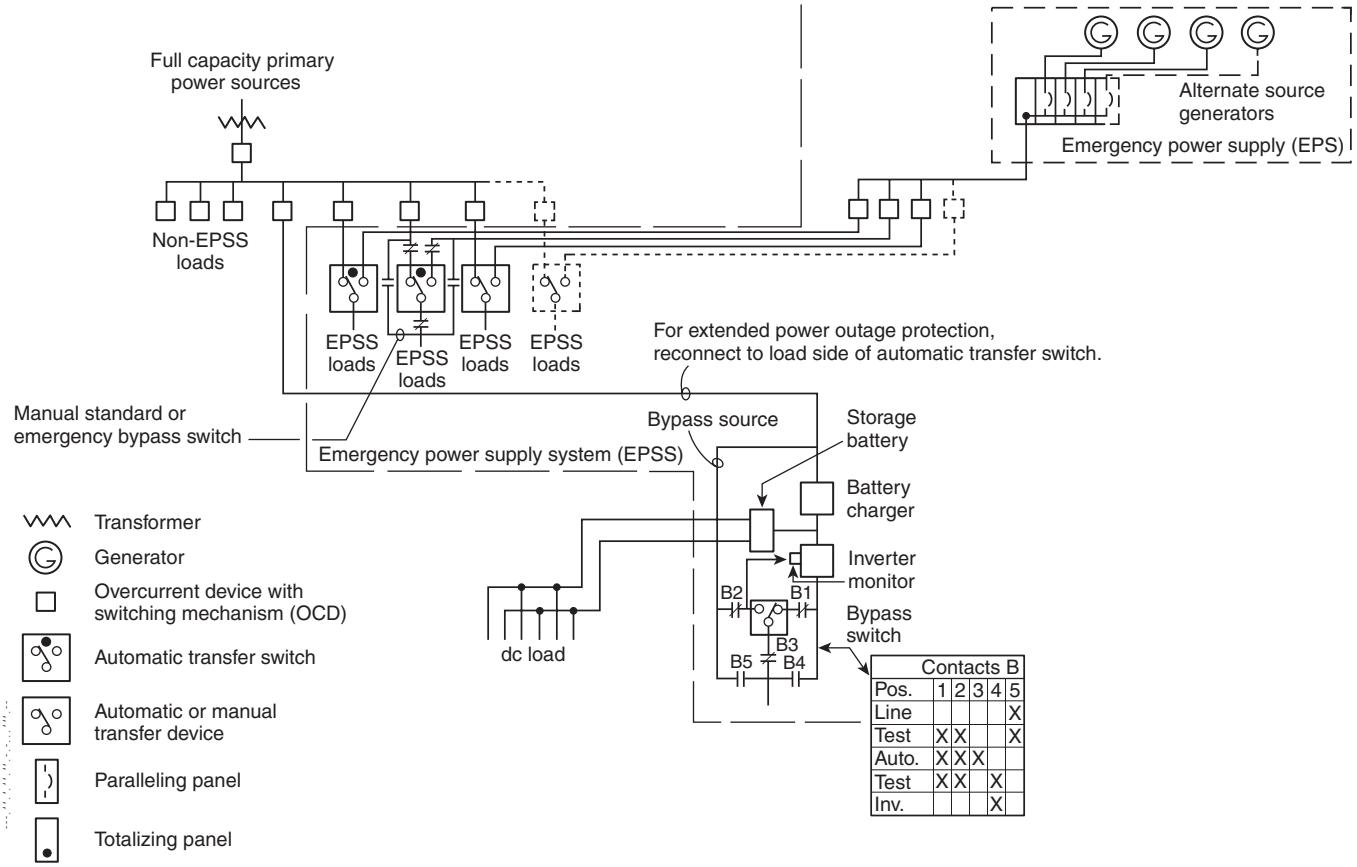

FIGURE B.1(d) Typical Composite Emergency Power Supply System.

Annex C Informational References

C.1 Referenced Publications. The following documents or portions thereof are referenced within this standard for informational purposes only and are thus not part of the requirements of this document unless also listed in Chapter 2.

C.1.1 NFPA Publications. National Fire Protection Association, 1 Batterymarch Park, Quincy, MA 02169-7471.

NFPA 20, *Standard for the Installation of Stationary Pumps for Fire Protection*, 2003 edition.

NFPA 37, *Standard for the Installation and Use of Stationary Combustion Engines and Gas Turbines*, 2002 edition.

NFPA 54, *National Fuel Gas Code*, 2002 edition.

NFPA 58, *Liquefied Petroleum Gas Code*, 2004 edition.

NFPA 70, *National Electrical Code®*, 2005 edition.

NFPA 111, *Standard on Stored Electrical Energy Emergency and Standby Power Systems*, 2001 edition.

C.1.2 Other Publications.

C.1.2.1 ANSI Publications. American National Standards Institute, Inc., 25 West 43rd Street, 4th Floor, New York, NY 10036.

ANSI C84.1, *Standard for Electric Power Systems and Equipment Voltage Ratings*, 1995.

ANSI/NEMA MG1, *Standard for Motors and Generators*, 1998.

ANSI/NEMA MG2, *Safety Standard for Construction and Guide for Selection, Installation and Use of Electric Motors and Generators*, 1989.

C.1.2.2 ASCE Publication. American Society of Civil Engineers, 1801 Alexander Bell Drive, Reston, VA 20191.

ASCE 7, *Minimum Design Loads for Buildings and Other Structures,* 2002.

C.1.2.3 Other Publications. *Merriam-Webster's Collegiate Dictionary,* 11th edition, Merriam-Webster, Inc., Springfield, MA, 2003.

C.2 Informational References. The following documents or portions thereof are referenced within this standard for informational purposes only and are thus not part of the requirements of this document unless also listed in Chapter 2.

C.2.1 NFPA Publications. National Fire Protection Association, 1 Batterymarch Park, Quincy, MA 02169-7471.

NFPA 70B, *Recommended Practice for Electrical Equipment Maintenance*, 2002 edition.

NFPA 72®, *National Fire Alarm Code®*, 2002 edition.

NFPA 99, *Standard for Health Care Facilities*, 2005 edition.

NFPA *101®*, *Life Safety Code®*, 2003 edition.

C.3 References for Extracts. (Reserved)

Copyright National Fire Protection Association
Provided by IHS under license with NFPA
No reproduction or networking permitted without license from IHS
Not for Resale

Index

© 2005 National Fire Protection Association. All Rights Reserved.

The copyright in this index is separate and distinct from the copyright in the document that it indexes. The licensing provisions set forth for the document are not applicable to this index. This index may not be reproduced in whole or in part by any means without the express written permission of NFPA.

-A-

Acceptance tests 7.13
AC instruments ..... 5.6.5.2(6)
Alarms ..... 5.6.5.2(4), Table 5.6.5.2
Ambient temperature 7.7.6
Antifreeze protection 5.3.3
Application of standard 1.3
Approved (definition) 3.2.1, A.3.2.1
ATS ..... *see* Automatic transfer switches
Authority having jurisdiction (definition) 3.2.2, A.3.2.2
Automatic transfer switches 6.2, A.6.2
Definition 3.3.9.1
Manual operation 6.2.4, A.6.2.4

-B-

Batteries
Distribution and wiring system 7.12.6
Lead-acid 5.6.4.5
Valve-regulated (VRLA) (definition) 3.3.2.1
Vented (flooded) (definition) 3.3.2.2
Nickel-cadmium 5.6.4.5
Number of 5.6.4.3, A.5.6.4.3
Seismic risk areas A.7.11.5
Size of 5.6.4.4, A.5.6.4.4
Type of 5.6.4.5, A.5.6.4.5.1
Battery certification (definition) 3.3.1, A.3.3.1
Battery charger 5.6.3.6, 7.12.6.2
Automatic 5.6.4.6, A.5.6.4.6
Black start ..... 5.6.4.1.2(4)
Definition 3.3.3
Bypass-isolation switches 6.4, A.6.4.3, A.6.4.4
Definition 3.3.9.2
Bypass valve 5.6.3.2.1

-C-

Capacity, energy converters 5.4, A.5.4
Classification of systems ..... *See* Emergency Power Supply Systems (EPSS)
Composite emergency power supply system ..... Fig. B.1(d)
Conductors, neutral, isolation of 6.2.15, A.6.2.15
Control panel
Functions 5.6.5, A.5.6.5.6
Wiring to prime mover 5.6.3.5
Control switches ..... 5.6.5.2(2)
Cooling systems 7.8, A.7.8.2
Equipment room 7.7, A.7.7.1
Factors 7.8.5
Prime movers 5.6.7
Seismic risk areas A.7.11.5
Water supply 7.8.2, 7.8.3, A.7.8.2
Cranking control equipment ..... 5.6.5.2(1)
Cranking cycle 5.6.4.2, 5.6.5.5, A.5.6.4.2

-D-

Day fuel tanks 7.9.4
Definition 3.3.6.1
Definitions ..... Chap. 3
Detection systems 7.11.3
Diagrams
Electrical 5.6.10.4
Typical systems ..... Annex B
Distribution and wiring systems 7.12
Electrical diagrams 5.6.10.4
Neutral conductors, isolation of 6.2.15, A.6.2.15
Prime mover to control panel 5.6.3.5
Testing and maintenance of 8.4.7, A.8.4.7

-E-

Electrical diagrams 5.6.10.4
Electrical equipment ..... *see* Distribution and wiring systems; Switches
Emergency Power Supply (EPS) (definition) 3.3.4, A.3.3.4
Emergency Power Supply Systems (EPSS)
Classification
Class 4.2, A.4.2
General 4.1, A.4.1
Level ..... 4.4, A.4.4; *see also* Level 1 EPSS; Level 2 EPSS
Type 4.3
Definition 3.3.5, A.3.3.5
Diagrams of typical systems ..... Annex B
Enclosed fuel tanks 5.5.1.1
Definition 3.3.6.2
Energy converters 5.1.4, 5.2, A.5.1.4, A.5.2.2
Capacity 5.4, A.5.4
Prototype tests 5.2.1.2, 5.2.1.3, 5.2.2, A.5.2.2
Supplier compliance 5.6.10.5
Temperature 5.3
Energy sources 5.1, A.5.1
Environmental considerations ..... Chap. 7
EPS ..... *see* Emergency Power Supply (EPS)
EPSS ..... *see* Emergency Power Supply Systems (EPSS)
Equivalency to standard 1.4
Exciters 5.6.9, A.5.6.9.1
Exercising timer 6.2.11
Exhaust system 7.10, A.7.10.1, A.7.10.3
Noise control 7.10.3.3, A.7.10.3
Prime mover 5.6.8

-F-

Fire-rating, EPS room 7.2.1.1
Fire suppression systems 7.11.2, A.7.11.2
Fuel-cell systems A.5.1.4
Fuel supply, energy converters 5.5, A.5.5.2, A.5.5.3
Fuel system 7.9, A.7.9.1.2, A.7.9.6, A.7.9.7
Fuel tanks ..... 7.9.1 to 7.9.5, A.7.9.1.2
Capacity 5.5.3, A.5.5.3
Day 7.9.4
Definition 3.3.6.1
Enclosed 5.5.1.1
Definition 3.3.6.2
Integral 7.9.5
Definition 3.3.6.3
Low-fuel sensing switch 5.5.2, A.5.5.2
Main 5.5.3, A.5.5.3
Definition 3.3.6.4
Seismic risk areas A.7.11.5

Copyright National Fire Protection Association
Provided by IHS under license with NFPA
No reproduction or networking permitted without license from IHS
Not for Resale

-G-

Generators 5.6.9, 5.6.10.1, A.5.1.4, A.5.6.9.1
Inspection, testing, and maintenance ..... 8.4.1 to 8.4.4, A.8.4.1, A.8.4.2
Seismic risk areas A.7.11.5
Governors 5.6.3.1

-H-

Heating 7.7

-I-

Indicating valves 7.9.11
Inspections ..... 8.3.4 to 8.3.7, 8.4, A.8.3.5, A.8.3.7
Installation of systems ..... Chap. 7
Instruments, prime mover 5.6.3.3, 5.6.3.4
Integral fuel tanks 7.9.5
Definition 3.3.6.3
Interlocking of separate power sources 6.2.3, 6.2.16.1

-L-

Labeled (definition) 3.2.3
Lamps .....*see also* Transfer switches, indicator lights
Definition 3.3.7
Level 1 EPSS 4.4.1, 4.4.3, 4.4.4, A.4.4.1, A.4.4.4
Energy converter 5.2.3
Fuel supply ..... 5.1.1 Ex., 5.5.1, A.5.1.1
Installation ..... 7.2, A.7.2.2 to A.7.2.4
Installation acceptance 7.13.2.1
Instruction manuals 8.2.2
Location ..... 7.2, A.7.2.2 to A.7.2.4
Operational inspection and testing 7, 8.4, 8.4.1, 8.4.9, A.8.4.1, A.8.4.7, A.8.4.9
Ventilation 7.7.5
Level 2 EPSS ..... 4.4.2 to 4.4.4, A.4.4.2, A.4.4.4
Location 7.2.3, 7.2.4, A.7.2.3, A.7.2.4
Operational inspection and testing 8.4.1, A.8.4.1
Lighting 7.3, A.7.3.3
Lightning protection 7.11.4
Listed (definition) 3.2.4, A.3.2.4
Load switching (shedding) 6.3
Load transfer .....*see* Motor load transfer
Location of system ..... 7.2, A.7.2.2 to A.7.2.4, A.7.11.5

-M-

Main fuel tanks 5.5.3, A.5.5.3
Definition 3.3.6.4
Maintenance Chap.8
Schedule A.8.3.1
Supervision of 8.4.8
Manual operation, automatic transfer switches 6.2.4, A.6.2.4
Manuals, instruction 8.2.1, 8.2.2, A.8.2
Motor load transfer 6.2.14
Mounting of system 7.4
Multiple-unit system, typical ..... Fig. B.1(b)

-N-

Neutral conductors, isolation of 6.2.15, A.6.2.15
Noise control 7.6, A.7.6
Nonautomatic transfer switches 6.2.16, A.6.2.16
Definition 3.3.9.3

-O-

Occupancy category (definition) 3.3.8
Operational testing ..... Chap. 8
Overcurrent protective devices 6.2.14, 6.5, A.6.5.1, A.6.5.3

-P-

Piping
Exhaust 5.6.8
Fuel 7.9.3
Prime movers 5.2.4, 5.6, 5.6.10.1, A.5.6
Accessories 5.2.2, 5.2.4.1, 5.6.1, 5.6.3, A.5.2.2
Control panel wiring to 5.6.3.5
Cooling system 5.6.7, 7.8.1
Exhaust piping 5.6.8
Fuel supply 7.9.6, 7.9.7, 7.9.9, A.7.9.6, A.7.9.7
Instruments 5.6.3.3, 5.6.3.4
Otto or diesel cycle starting 5.6.4.2, A.5.6.4.2
Ratings 5.6.2
Starting equipment ..... 5.6.4, A.5.6.4.2 to A.5.6.4.6
Protection of systems
Equipment room 7.11, A.7.11.2, A.7.11.5, A.7.11.6
Overcurrent 6.5, A.6.5.1, A.6.5.3
Prototype tests, energy converters 5.2.1.2, 5.2.1.3, 5.2.2, A.5.2.2
Public electric utility, use of as EPSS 5.1.4, A.5.1.4
Purpose of standard 1.2

-R-

References ..... Chap. 2, Annex C
Remote controls 5.6.6
Replacement parts 8.2.4, A.8.2
Rotating equipment 5.2.2, 5.2.4, 5.6, A.5.1.4, A.5.2.2, A.5.6
Diagram of typical system ..... Fig. B.1(a)

-S-

Scope of standard ..... 1.1, A.1.1.4, A.1.1.5(3)
Seismic risk 5.1.2, 7.11.5, 7.11.6, A.7.11.5, A.7.11.6
Shall (definition) 3.2.5
Should (definition) 3.2.6
Shutdowns ..... 5.6.5.2(3), 5.6.5.2(5), 5.6.5.3, 5.6.5.6, 6.2.10, A.5.6.5.6
Solenoid valves 5.6.3.2
Source monitoring 6.2.2, A.6.2.2.1
Spare parts 8.2.4, A.8.2
Standard (definition) 3.2.7
Starting equipment ..... 5.6.4, Table 5.6.4.2, A.5.6.4.2 to A.5.6.4.6
Switches
Automatic transfer .....*see* Automatic transfer switches
Bypass-isolation .....*see* Bypass-isolation switches
Low-fuel sensing 5.5.2, A.5.5.2
Nonautomatic transfer .....*see* Nonautomatic transfer switches
Test 6.2.12
Transfer .....*see* Transfer switches
Switching, load 6.3

-T-

Tanks .....*see* Fuel tanks
Temperature
Ambient 7.7.6
Energy converters 5.3
Testing devices 8.2.3, A.8.2
Tests
Acceptance 7.13
Cycle crank 7.13.10.2
Full-load 7.13.6, 7.13.7
Operational ..... Chap. 8
Prototype energy converters 5.2.1.2, 5.2.1.3, 5.2.2, A.5.2.2
Test switches 6.2.12
Time delay devices ..... 6.2.5 to 6.2.10, A.6.2.5, A.6.2.8
Timer, exercising 6.2.11

Copyright National Fire Protection Association
Provided by IHS under license with NFPA
No reproduction or networking permitted without license from IHS
Not for Resale

Tools, special maintenance 8.2.3, A.8.2
Transfer switches ..... Chap. 6; *see also* Automatic transfer switches; Nonautomatic transfer switches
Indicator lights 6.2.13, 6.2.16.2, A.6.2.13
Inspection, testing, and maintenance 8.3.5, 8.4.6, A.8.3.5
Rating 6.3.1
Seismic risk areas A.7.11.5
Time delay ..... 6.2.5 to 6.2.10, A.6.2.5, A.6.2.8
Type of EPSS system 4.3
Typical systems, diagrams of ..... Annex B

-U-

Uninterruptible power supply (UPS) system ..... Fig. B.1(c)

-V-

Valves
Bypass 5.6.3.2.1
Indicating, in fuel systems 7.9.11
Prime movers, natural gas-fueled 7.9.7, A.7.9.7
Solenoid 5.6.3.2
Vented (flooded) battery, lead-acid 3.3.9.1
Ventilating systems 7.7, A.7.7.1
Vibration isolators 5.6.10.3, 7.5, A.5.6.10.3, A.7.5
Voltage regulators 5.6.9, A.5.6.9.1

-W-

Wiring systems ..... *see* Distribution and wiring systems

Copyright National Fire Protection Association
Provided by IHS under license with NFPA
No reproduction or networking permitted without license from IHS
Not for Resale

Sequence of Events Leading to Publication of an NFPA Committee Document

Call goes out for proposals to amend existing document or for recommendations on new document.

▼

Committee meets to act on proposals, to develop its own proposals, and to prepare its report.

▼

Committee votes on proposals by letter ballot. If two-thirds approve, report goes forward. Lacking two-thirds approval, report returns to committee.

▼

Report — *Report on Proposals* (ROP) — is published for public review and comment.

▼

Committee meets to act on each public comment received.

▼

Committee votes on comments by letter ballot. If two-thirds approve, supplementary report goes forward. Lacking two-thirds approval, supplementary report returns to committee.

▼

Supplementary report — *Report on Comments* (ROC) — is published for public review.

▼

NFPA membership meets (Annual or Fall Meeting) and acts on committee report (ROP or ROC).

▼

Committee votes on any amendments to report approved at NFPA Annual or Fall Meeting.

▼

Appeals to Standards Council on Association action must be filed within 20 days of the NFPA Annual or Fall Meeting.

▼

Standards Council decides, based on all evidence, whether or not to issue standard or to take other action, including upholding any appeals.

Committee Membership Classifications

The following classifications apply to Technical Committee members and represent their principal interest in the activity of the committee.

M *Manufacturer:* A representative of a maker or marketer of a product, assembly, or system, or portion thereof, that is affected by the standard.

U *User:* A representative of an entity that is subject to the provisions of the standard or that voluntarily uses the standard.

I/M *Installer/Maintainer:* A representative of an entity that is in the business of installing or maintaining a product, assembly, or system affected by the standard.

L *Labor:* A labor representative or employee concerned with safety in the workplace.

R/T *Applied Research/Testing Laboratory:* A representative of an independent testing laboratory or independent applied research organization that promulgates and/or enforces standards.

E *Enforcing Authority:* A representative of an agency or an organization that promulgates and/or enforces standards.

I *Insurance:* A representative of an insurance company, broker, agent, bureau, or inspection agency.

C *Consumer:* A person who is, or represents, the ultimate purchaser of a product, system, or service affected by the standard, but who is not included in the *User* classification.

SE *Special Expert:* A person not representing any of the previous classifications, but who has a special expertise in the scope of the standard or portion thereof.

NOTES:

1. "Standard" connotes code, standard, recommended practice, or guide.
2. A representative includes an employee.
3. While these classifications will be used by the Standards Council to achieve a balance for Technical Committees, the Standards Council may determine that new classifications of members or unique interests need representation in order to foster the best possible committee deliberations on any project. In this connection, the Standards Council may make such appointments as it seems appropriate in the public interest, such as the classification of "Utilities" in the National Electrical Code Committee.
4. Representatives of subsidiaries of any group are generally considered to have the same classification as the parent organization.

Copyright National Fire Protection Association
Provided by IHS under license with NFPA
No reproduction or networking permitted without license from IHS
Not for Resale

NFPA Technical Committee Document Proposal Form

Note: All proposals must be received by 5:00 p.m. EST/EDST on the published proposal closing date.

For further information on the standards-making process, please contact Codes and Standards Administration at 617-984-7249. For technical assistance, please call NFPA at 617-770-3000.

FOR OFFICE USE ONLY
Log #: _____
Date Rec'd: _____

Please indicate in which format you wish to receive your ROP/ROC: ☐ **CD ROM** ☐ **paper** ☐ **download**
(Note: In choosing the download option you intend to view the ROP/ROC from our Website. No copy will be sent to you.)

Date 12/18/02 **Name** John B. Smith **Telephone** 617-555-1212
Company _____
Address 9 Seattle St. **City** Seattle **State** WA **Zip** 02255
Please indicate organization represented (if any) Fire Marshals Assn. of North America

1. **a) NFPA Document Title** National Fire Alarm Code
   b) NFPA No. & Edition NFPA 72, 2002 ed. **c) Section/Paragraph** 4.4.7.1.1

2. **Proposal Recommends:** *(check one)* ☐ **new text** ☐ **revised text** ☒ **deleted text**

3. **Proposal.** *(Include proposed new or revised wording, or identification of wording to be deleted.)* Note: Proposed text should be in legislative format, that is, use underscore to denote wording to be inserted (inserted wording) and strike-through to denote wording to be deleted (~~deleted wording~~). Delete exception.

4. **Statement of Problem and Substantiation for Proposal.** Note: State the problem that will be resolved by your recommendation. Give the specific reason for your proposal including copies of tests, research papers, fire experience, etc. If more than 200 words, it may be abstracted for publication. A properly installed and maintained system should be free of ground faults. The occurrence of one or more ground faults should be required to cause a "trouble" signal because it indicates a condition that could contribute to future malfunction of the system. Ground fault protection has been widely available on these systems for years and its cost is negligible. Requiring it on all systems will promote better installations, maintenance and reliability.

5. ☒ **This Proposal is Original Material.** Note: Original material is considered to be the submitter's own idea based on or as a result of his/her own experience, thought, or research and, to the best of his/her knowledge, is not copied from another source.

   ☐ **This Proposal is Not Original Material; Its Source** ***(if known)*** **is as Follows:** _____

Sample

I hereby grant the NFPA all and full rights in copyright to this proposal, and I understand that I acquire no rights in any publication of NFPA in which this proposal in this or another similar or analogous form is used.

Signature ***(Required)*** John B. Smith

PLEASE USE SEPARATE FORM FOR EACH PROPOSAL • NFPA FAX (617) 770-3500

Mail to: Secretary, Standards Council • NFPA • 1 Batterymarch Park • PO Box 9101 • Quincy, MA 02269-9101

--`,,`,,`-`-`,,`,,`,`,,`---
Copyright National Fire Protection Association
Provided by IHS under license with NFPA
No reproduction or networking permitted without license from IHS
Not for Resale

NFPA Technical Committee Document Proposal Form

Note: All proposals must be received by 5:00 p.m. EST/EDST on the published proposal closing date.

For further information on the standards-making process, please contact Codes and Standards Administration at 617-984-7249. For technical assistance, please call NFPA at 617-770-3000.

FOR OFFICE USE ONLY
Log #: _____
Date Rec'd: _____

Please indicate in which format you wish to receive your ROP/ROC: ☐ **CD ROM** ☐ **paper** ☐ **download**
(Note: In choosing the download option you intend to view the ROP/ROC from our Website. No copy will be sent to you.)

Date _____ **Name** _____ **Telephone** _____
Company _____
Address _____ **City** _____ **State** _____ **Zip** _____
Please indicate organization represented (if any) _____

1. **a) NFPA Document Title** _____
   b) NFPA No. & Edition _____ **c) Section/Paragraph** _____

2. **Proposal Recommends:** *(check one)* ☐ **new text** ☐ **revised text** ☐ **deleted text**

3. **Proposal.** *(Include proposed new or revised wording, or identification of wording to be deleted.)* Note: Proposed text should be in legislative format, that is, use underscore to denote wording to be inserted (inserted wording) and strike-through to denote wording to be deleted (~~deleted wording~~). _____

4. **Statement of Problem and Substantiation for Proposal.** Note: State the problem that will be resolved by your recommendation. Give the specific reason for your proposal including copies of tests, research papers, fire experience, etc. If more than 200 words, it may be abstracted for publication. _____

5. ☐ **This Proposal is Original Material.** Note: Original material is considered to be the submitter's own idea based on or as a result of his/her own experience, thought, or research and, to the best of his/her knowledge, is not copied from another source.

   ☐ **This Proposal is Not Original Material; Its Source *(if known)* is as Follows:** _____

I hereby grant the NFPA all and full rights in copyright to this proposal, and I understand that I acquire no rights in any publication of NFPA in which this proposal in this or another similar or analogous form is used.

Signature *(Required)* _____

PLEASE USE SEPARATE FORM FOR EACH PROPOSAL • NFPA FAX (617) 770-3500

Mail to: Secretary, Standards Council • NFPA • 1 Batterymarch Park • PO Box 9101 • Quincy, MA 02269-9101

Copyright National Fire Protection Association
Provided by IHS under license with NFPA
No reproduction or networking permitted without license from IHS
Not for Resale