NFPA 101B

Code for Means of Egress for Buildings and Structures

2002 Edition

NFPA, 1 Batterymarch Park, PO Box 9101, Quincy, MA 02269-9101
An International Codes and Standards Organization

NFPA License Agreement

This document is copyrighted by the National Fire Protection Association (NFPA), 1 Batterymarch Park, Quincy, MA 02269-9101 USA.
All rights reserved.

NFPA grants you a license as follows: The right to download an electronic file of this NFPA document for temporary storage on one computer for purposes of viewing and/or printing one copy of the NFPA document for individual use. Neither the electronic file nor the hard copy print may be reproduced in any way. In addition, the electronic file may not be distributed elsewhere over computer networks or otherwise. The hard copy print may only be used personally or distributed to other employees for their internal use within your organization.

Copyright National Fire Protection Association
Provided by IHS under license with NFPA
No reproduction or networking permitted without license from IHS

Not for Resale

Copyright ©
National Fire Protection Association, Inc.
One Batterymarch Park
Quincy, Massachusetts 02269

IMPORTANT NOTICE ABOUT THIS DOCUMENT

NFPA codes, standards, recommended practices, and guides, of which the document contained herein is one, are developed through a consensus standards development process approved by the American National Standards Institute. This process brings together volunteers representing varied viewpoints and interests to achieve consensus on fire and other safety issues. While the NFPA administers the process and establishes rules to promote fairness in the development of consensus, it does not independently test, evaluate, or verify the accuracy of any information or the soundness of any judgments contained in its codes and standards.

The NFPA disclaims liability for any personal injury, property or other damages of any nature whatsoever, whether special, indirect, consequential or compensatory, directly or indirectly resulting from the publication, use of, or reliance on this document. The NFPA also makes no guaranty or warranty as to the accuracy or completeness of any information published herein.

In issuing and making this document available, the NFPA is not undertaking to render professional or other services for or on behalf of any person or entity. Nor is the NFPA undertaking to perform any duty owed by any person or entity to someone else. Anyone using this document should rely on his or her own independent judgment or, as appropriate, seek the advice of a competent professional in determining the exercise of reasonable care in any given circumstances.

The NFPA has no power, nor does it undertake, to police or enforce compliance with the contents of this document. Nor does the NFPA list, certify, test or inspect products, designs, or installations for compliance with this document. Any certification or other statement of compliance with the requirements of this document shall not be attributable to the NFPA and is solely the responsibility of the certifier or maker of the statement.

NOTICES

All questions or other communications relating to this document and all requests for information on NFPA procedures governing its codes and standards development process, including information on the procedures for requesting Formal Interpretations, for proposing Tentative Interim Amendments, and for proposing revisions to NFPA documents during regular revision cycles, should be sent to NFPA headquarters, addressed to the attention of the Secretary, Standards Council, National Fire Protection Association, 1 Batterymarch Park, P.O. Box 9101, Quincy, MA 02269-9101.

Users of this document should be aware that this document may be amended from time to time through the issuance of Tentative Interim Amendments, and that an official NFPA document at any point in time consists of the current edition of the document together with any Tentative Interim Amendments then in effect. In order to determine whether this document is the current edition and whether it has been amended through the issuance of Tentative Interim Amendments, consult appropriate NFPA publications such as the *National Fire Codes*® Subscription Service, visit the NFPA website at www.nfpa.org, or contact the NFPA at the address listed above.

A statement, written or oral, that is not processed in accordance with Section 5 of the Regulations Governing Committee Projects shall not be considered the official position of NFPA or any of its Committees and shall not be considered to be, nor be relied upon as, a Formal Interpretation.

The NFPA does not take any position with respect to the validity of any patent rights asserted in connection with any items which are mentioned in or are the subject of this document, and the NFPA disclaims liability for the infringement of any patent resulting from the use of or reliance on this document. Users of this document are expressly advised that determination of the validity of any such patent rights, and the risk of infringement of such rights, is entirely their own responsibility.

Users of this document should consult applicable federal, state, and local laws and regulations. NFPA does not, by the publication of this document, intend to urge action that is not in compliance with applicable laws, and this document may not be construed as doing so.

--`,,,-`-`,,`,,`,`,,`---

Copyright National Fire Protection Association
Provided by IHS under license with NFPA
No reproduction or networking permitted without license from IHS
Not for Resale

Licensing Policy

This document is copyrighted by the National Fire Protection Association (NFPA). By making this document available for use and adoption by public authorities and others, the NFPA does not waive any rights in copyright to this document.

1. Adoption by Reference—Public authorities and others are urged to reference this document in laws, ordinances, regulations, administrative orders, or similar instruments. Any deletions, additions, and changes desired by the adopting authority must be noted separately. Those using this method are requested to notify the NFPA (Attention: Secretary, Standards Council) in writing of such use. The term "adoption by reference" means the citing of title and publishing information only.

2. Adoption by Transcription—A. Public authorities with lawmaking or rule-making powers only, upon written notice to the NFPA (Attention: Secretary, Standards Council), will be granted a royalty-free license to print and republish this document in whole or in part, with changes and additions, if any, noted separately, in laws, ordinances, regulations, administrative orders, or similar instruments having the force of law, provided that: (1) due notice of NFPA's copyright is contained in each law and in each copy thereof; and (2) that such printing and republication is limited to numbers sufficient to satisfy the jurisdiction's lawmaking or rule-making process. **B.** Once this NFPA Code or Standard has been adopted into law, all printings of this document by public authorities with lawmaking or rule-making powers or any other persons desiring to reproduce this document or its contents as adopted by the jurisdiction in whole or in part, in any form, upon written request to NFPA (Attention: Secretary, Standards Council), will be granted a nonexclusive license to print, republish, and vend this document in whole or in part, with changes and additions, if any, noted separately, provided that due notice of NFPA's copyright is contained in each copy. Such license shall be granted only upon agreement to pay NFPA a royalty. This royalty is required to provide funds for the research and development necessary to continue the work of NFPA and its volunteers in continually updating and revising NFPA standards. Under certain circumstances, public authorities with lawmaking or rule-making powers may apply for and may receive a special royalty where the public interest will be served thereby.

3. Scope of License Grant—The terms and conditions set forth above do not extend to the index of this document.

(For further explanation, see the Policy Concerning the Adoption, Printing, and Publication of NFPA Documents, which is available upon request from the NFPA.)

Copyright National Fire Protection Association
Provided by IHS under license with NFPA
No reproduction or networking permitted without license from IHS
Not for Resale

Copyright © 2002, National Fire Protection Association, All Rights Reserved

NFPA 101B

Code for

Means of Egress for Buildings and Structures

2002 Edition

This edition of NFPA 101B, *Code for Means of Egress for Buildings and Structures,* was prepared by the Technical Committee on Means of Egress, released by the Technical Correlating Committee on Safety to Life, and acted on by NFPA at its May Association Technical Meeting held May 19–23, 2002, in Minneapolis, MN. It was issued by the Standards Council on July 19, 2002, with an effective date of August 8, 2002, and supersedes all previous editions.

This edition of NFPA 101B was approved as an American National Standard on July 19, 2002.

Origin and Development of NFPA 101B

NFPA 101B, first published in 1999, was developed to address a subset of the subject areas covered by NFPA *101*®, *Life Safety Code*® — namely, means of egress. NFPA offers NFPA 101B as a model reference for mandatory use by the model building codes in lieu of those codes' individual chapters on means of egress. See A.1.3 in Annex A.

This 2002 edition reflects the requirements of the 2000 edition of NFPA *101.*

--`,,,-`-`,,`,,`,`,,`---

Copyright National Fire Protection Association
Provided by IHS under license with NFPA
No reproduction or networking permitted without license from IHS

Not for Resale

Technical Correlating Committee on Safety to Life

James R. Quiter, *Chair*
Arup Fire, CA [SE]

Ron Coté, *Nonvoting Secretary*
National Fire Protection Association, MA

Alastair J. M. Aikman, National Research Council of Canada, ON [RT]
John L. Bryan, MD [SE]
Richard W. Bukowski, National Institute of Standards and Technology, MD [RT]
Rep. National Fire Alarm Code Committee
Kenneth E. Bush, Maryland State Fire Marshals Office, MD [E]
Rep. International Fire Marshals Association
Lee J. Dosedlo, Underwriters Laboratories Inc., IL [RT]
Gene B. Endthoff, National Fire Sprinkler Association, IL [M]
Jackie T. Gibbs, Marietta Fire Department, GA [U]
Rep. International Association of Fire Chiefs
J. Edmund Kalie, Jr., Prince George's County Government, MD [E]
Ronald K. Mengel, System Sensor, IL [M]
Rep. National Electrical Manufacturers Association
Jake Pauls, Jake Pauls Consulting Services in Building Use & Safety, MD [C]
Rep. American Public Health Association
Kirby W. Perry, Kirby W. Perry Architects & Associates Inc., TX [SE]
Rep. American Institute of Architects
Lawrence G. Perry, Building Owners & Managers Association International, MD [U]
David L. Wismer, Department of Licenses & Inspections, PA [E]

Alternates

Andrew Brian Bowman, Gage-Babcock & Associates, Inc., IL [U]
(Vot. Alt. to American Health Care Association)
Russell P. Fleming, National Fire Sprinkler Association, NY [M]
(Alt. to G. B. Endthoff)
Howard Hopper, Underwriters Laboratories Inc., CA [RT]
(Alt. to L. J. Dosedlo)
Ronald H. Minter, Thomas & Betts, TN [M]
(Alt. to R. K. Mengel)
Martin H. Reiss, The RJA Group, Inc., MA [SE]
(Alt. to J. R. Quiter)
Michael D. Tomy, Heery International Inc., GA [SE]
(Alt. to K. W. Perry)

Nonvoting

William E. Fitch, Omega Point Laboratories Inc., TX, Chair SAF-FUR
Ralph Gerdes, Ralph Gerdes Consultants, LLC, IN, Chair SAF-AXM
Wayne D. Holmes, HSB Professional Loss Control, CT, Chair SAF-IND
Morgan J. Hurley, Society of Fire Protection Engineers, MD, Chair SAF-FUN
Thomas W. Jaeger, Gage-Babcock & Associates Inc., VA, Chair SAF-DET
Philip R. Jose, U.S., Department of Veterans Affairs, NY, Chair SAF-BCF
Richard L. Klinker, Klinker & Associates Inc., MD, Chair SAF-BSF
William E. Koffel, Koffel Associates, Inc., MD, Chair SAF-MEA
James K. Lathrop, Koffel Associates, Inc., CT, Chair SAF-RES
John W. McCormick, Code Consultants, Inc., MO, Chair SAF-FIR
Harold E. Nelson, Hughes Associates, Inc., VA (Member Emeritus)
Daniel J. O'Connor, Schirmer Engineering Corp., IL, Chair SAF-HEA
Ed Schultz, Code Consultants, Inc., MO, Chair SAF-MER
Catherine L. Stashak, Schirmer Engineering Corporation, IL, Chair SAF-END
David W. Stroup, National Institute of Standards and Technology, MD, Chair SAF-ALS

Ron Coté, NFPA Staff Liaison

Committee Scope: This Committee shall have primary responsibility for documents on the protection of human life from fire and other circumstances capable of producing similar consequences and for the non-emergency and emergency movement of people.

Copyright National Fire Protection Association
Provided by IHS under license with NFPA
No reproduction or networking permitted without license from IHS
Not for Resale

Technical Committee on Means of Egress

William E. Koffel, *Chair*
Koffel Associates, Inc., MD [SE]

Ron Coté, *Nonvoting Secretary*
National Fire Protection Association, MA

John L. Barrios, Dept. Business and Community Services, FL [E]
Rep. Southern Building Code Congress International Inc/International Code Council, Inc.
John L. Bryan, MD [SE]
Kenneth E. Bush, Maryland State Fire Marshals Office, MD [E]
Rep. International Fire Marshals Association
Davie J. Camp, Thyssen Krupp Elevator, TN [M]
Rep. National Elevator Industry Inc.
Steven Di Pilla, ACE USA Risk Control Services, NJ [I]
Joshua W. Elvove, U.S. Dept of Veterans Affairs (VA), CO [U]
Gene B. Endthoff, National Fire Sprinkler Association, IL [M]
Philip C. Favro, Philip C. Favro & Associates, CA [SE]
Edward L. Fixen, Schirmer Engineering Corporation, CA [SE]
Dave Frable, U.S. General Services Administration, IL [U]
Rita C. Guest, Carson Guest, Inc., GA [U]
Rep. American Society of Interior Designers
Billy G. Helton, Lithonia Emergency Systems, GA [M]
Rep. National Electrical Manufacturers Association
Lawrence J. McGinty, Central Intelligence Agency, DC [U]
Wayne Menuz, Underwriters Laboratories Inc., CA [RT]
Jake Pauls, Jake Pauls Consulting Services in Building Use and Safety, MD [C]
Rep. American Public Health Association
Robert R. Perry, Robert Perry Associates Inc., IL [M]
Rep. Door & Hardware Institute
Eric Rosenbaum, Hughes Associates, Inc., MD [SE]
John A. Sharry, Lawrence Livermore National Laboratory, CA [U]
Leslie Strull, The RJA Group, Inc., IL [SE]
Michael Tierney, Builders Hardware Manufacturers Association, CT [M]
Michael D. Tomy, Heery International Inc., GA [SE]
Rep. American Institute of Architects
Joseph H. Versteeg, Versteeg Associates, CT [E]
Rep. Fairfield Connecticut Fire Marshal's Office
David L. Wismer, Department of Licenses & Inspections, PA [E]
Jay Woodward, International Conference of Building Officials, MO [E]

Alternates

John R. Battles, Southern Building Code Congress International, AL [E]
(Alt. to J. L. Barrios)
Charles H. Berry, Baltimore Virginia Medical Center, MD [U]
(Alt. to J. W. Elvove)
Warren D. Bonisch, Schirmer Engineering Corporation, TX [SE]
(Alt. to E. L. Fixen)
Edward A. Donoghue, Edward A. Donoghue Associates, Inc., NY [M]
(Alt. to D. J. Camp)
Barbara Ebstein, Vinick Associates, Inc., CT [U]
(Alt. to R. C. Guest)
David A. Gilda, Builders Hardware Manufacturers Association, CT [M]
(Alt. to M. Tierney)
Miles J. Haber, Monument Construction Inc., MD [U]
(Vot. Alt. to NAHB Rep.)
James K. Lathrop, Koffel Associates, Inc., CT [SE]
(Alt. to W. E. Koffel)
R. T. Leicht, Delaware Fire Marshal's Office, DE [E]
(Alt. to K. E. Bush)
James A. Milke, University of Maryland, MD [SE]
(Alt. to J. L. Bryan)
Ronald H. Minter, Thomas & Betts, TN [M]
(Alt. to B. G. Helton)
Harold E. Nelson, Hughes Associates, Inc., VA [SE]
(Alt. to E. Rosenbaum)
Roy W. Schwarzenberg, Central Intelligence Agency, DC [U]
(Alt. to L. J. McGinty)
Michael S. Shulman, Underwriters Laboratories Inc., CA [RT]
(Alt. to W. Menuz)

Nonvoting

Pichaya Chantranuwat, Fusion Consultants Company Limited/Thailand, Thailand

Ron Coté, NFPA Staff Liaison

Committee Scope: This Committee shall have primary responsibility for documents on the general requirements for safe egress for protection of human life from fire and other circumstances capable of producing similar consequences and on the nonemergency and emergency movement of people.

These lists represent the membership at the time the Committees were balloted on the final text of this edition. Since that time, changes in the membership may have occurred. A key to classifications is found at the back of the document.

NOTE: Membership on a committee shall not in and of itself constitute an endorsement of the Association or any document developed by the committee on which the member serves.

Copyright National Fire Protection Association
Provided by IHS under license with NFPA
No reproduction or networking permitted without license from IHS
Not for Resale

Contents

Chapter 1 Administration **101B–** 5
1.1 Scope **101B–** 5
1.2 Purpose. (Reserved) **101B–** 5
1.3 Application **101B–** 5
1.4 Equivalency **101B–** 5
1.5 Units and Formulas **101B–** 5
1.6 Enforcement **101B–** 6

Chapter 2 Referenced Publications **101B–** 6
2.1 General **101B–** 6
2.2 NFPA Publications **101B–** 6
2.3 Other Publications **101B–** 6

Chapter 3 Definitions **101B–** 6
3.1 General **101B–** 6
3.2 NFPA Official Definitions **101B–** 6
3.3 General Definitions **101B–** 6

Chapter 4 General **101B–** 11
4.1 Mixed Occupancies. **101B–** 11
4.2 Hazard of Contents **101B–** 12

Chapter 5 New Construction **101B–** 12
5.1 General **101B–** 12
5.2 Means of Egress Components **101B–** 15
5.3 Capacity of Means of Egress **101B–** 29
5.4 Number of Means of Egress **101B–** 32
5.5 Arrangement of Means of Egress **101B–** 35
5.6 Measurement of Travel Distance to Exits **101B–** 41
5.7 Discharge from Exits **101B–** 43
5.8 Illumination of Means of Egress **101B–** 44
5.9 Emergency Lighting and Standby Power **101B–** 45
5.10 Marking of Means of Egress **101B–** 45
5.11 Special Provisions for Occupancies with High-Hazard Contents **101B–** 48
5.12 Mechanical Equipment Rooms, Boiler Rooms, and Furnace Rooms **101B–** 48
5.13 Subdivision of Building Space via Smoke Partitions **101B–** 48
5.14 Subdivision of Building Space via Smoke Barriers **101B–** 49
5.15 Special Provisions for Assembly Occupancy Seating **101B–** 51

Chapter 6 Means of Escape **101B–** 56
6.1 General **101B–** 56
6.2 One- and Two-Family Dwellings **101B–** 56
6.3 Dwelling Units in Apartment Buildings **101B–** 57
6.4 Guest Rooms or Guest Suites in Hotels and Dormitories **101B–** 57
6.5 Lodging and Rooming Houses **101B–** 57
6.6 Small Board and Care Facilities **101B–** 58

Chapter 7 Alterations, Repairs, or Change of Occupancy in Existing Structures **101B–** 59
7.1 Application **101B–** 59
7.2 Exemptions from Chapter 5 Requirements **101B–** 59

Annex A Explanatory Material **101B–** 64

Annex B Sample Ordinance Adopting NFPA 101B **101B–** 89

Annex C Informational References **101B–** 90

Index **101B–** 92

--`,,,-`-`,,`,,`,`,,`---
Copyright National Fire Protection Association
Provided by IHS under license with NFPA
No reproduction or networking permitted without license from IHS
Not for Resale

NFPA 101B

Code for

Means of Egress for Buildings and Structures

2002 Edition

NOTICE: An asterisk (*) following the number or letter designating a paragraph indicates that explanatory material on the paragraph can be found in Annex A.

Changes other than editorial are indicated by a vertical rule beside the paragraph, table, or figure in which the change occurred. These rules are included as an aid to the user in identifying changes from the previous edition. Where one or more complete paragraphs have been deleted, the deletion is indicated by a bullet between the paragraphs that remain.

A reference in brackets [ ] following a section or paragraph indicates material that has been extracted from another NFPA document. As an aid to the user, Annex C lists the complete title and edition of the source documents for both mandatory and nonmandatory extracts. Editorial changes to extracted material consist of revising references to an appropriate division in this document or the inclusion of the document number with the division number when the reference is to the original document. Requests for interpretations or revisions of extracted text shall be sent to the appropriate technical committee.

Information on referenced publications can be found in Chapter 2 and Annex C.

Chapter 1 Administration

1.1 Scope.

1.1.1 Title. NFPA 101B, *Code for Means of Egress for Buildings and Structures*, shall be known as the *Means of Egress Code*, is cited as such, and shall be referred to herein as "this *Code*" or "the *Code*."

1.1.2* Danger to Life from Fire. This *Code* addresses those egress features necessary to minimize danger to life from fire and smoke, crowd pressures, and movement of individuals and groups.

1.1.3 Egress Facilities. The *Code* establishes minimum criteria for the design of egress facilities in order to permit prompt escape of occupants from buildings or, where desirable, into safe areas within buildings.

1.1.4 Areas Not Addressed. The *Code* does not attempt to address the following:

(1) General fire prevention or building construction features that are normally a function of fire prevention codes and building codes
(2) Prevention of personal injuries incurred by an individual's own negligence
(3) Preservation of property from loss by fire

1.2* Purpose. (Reserved).

1.3* Application.

1.3.1 New Construction.

1.3.1.1 Means of egress for new construction shall comply with Chapter 5 of this *Code* except as modified by 1.3.2 and 1.3.3.

1.3.1.2 Large residential board and care occupancies with impractical evacuation capability shall meet the general requirements of Chapter 5 and those requirements specifically applicable to health care occupancies.

1.3.1.3 Where residential board and care occupancies are located within apartment buildings, the parts of the means of egress serving the apartment(s) used as a residential board and care occupancy shall meet the general requirements of Chapter 5 and those requirements specifically applicable to apartment buildings.

1.3.1.4 Ambulatory health care facilities shall be exempt from the means of egress requirements applicable to health care occupancies, provided the facility meets the general requirements of Chapter 5 and those requirements specifically applicable to business occupancies and ambulatory health care facilities.

1.3.1.5* Use Condition I detention and correctional occupancies shall meet the general requirements of Chapter 5 and those requirements specifically applicable to either residential occupancies or Use Condition II detention and correctional occupancies.

1.3.2 Means of Escape.

1.3.2.1 The means of escape provisions of Chapter 6 shall apply to the following:

(1) One- and two-family dwellings
(2) Dwelling units of apartment buildings
(3) Guest rooms or guest suites of hotels and dormitories
(4) Lodging and rooming houses
(5) Small residential board and care occupancies

1.3.2.2 Means of egress from dwelling units to the outside and from guest rooms or guest suites to the outside shall be in accordance with Chapter 5.

1.3.3 Alterations, Repairs, or Change of Occupancy in Existing Structures. Alterations, repairs, or change of occupancy in existing structures shall comply with Chapter 5 as modified by Chapter 7.

1.4 Equivalency.

1.4.1* Equivalency Option. Nothing in this *Code* is intended to prevent the use of systems, methods, or devices of equivalent or superior quality, strength, fire resistance, effectiveness, durability, and safety as alternatives to those prescribed by this *Code*, provided that technical documentation is submitted to the authority having jurisdiction to demonstrate equivalency and the system, method, or device is approved for the intended purpose by the authority having jurisdiction.

1.4.2* Equivalency Compliance. Alternative systems, methods, or devices approved as equivalent by the authority having jurisdiction shall be recognized as being in compliance with this *Code*.

1.5 Units and Formulas.

1.5.1 SI Units. Metric units of measurement in this *Code* are in accordance with the modernized metric system known as the International System of Units (SI).

1.5.2 Primary Values. The SI value for a measurement, and the equivalent inch-pound value given in parentheses, shall each be acceptable for use as primary units for satisfying the requirements of this *Code*.

Copyright National Fire Protection Association
Provided by IHS under license with NFPA
No reproduction or networking permitted without license from IHS
Not for Resale

1.6 Enforcement. This *Code* shall be administered and enforced by the authority having jurisdiction designated by the governing authority.*(See Annex B for sample wording for enabling legislation.)*

Chapter 2 Referenced Publications

2.1 General. The documents or portions thereof listed in this chapter are referenced within this code and shall be considered part of the requirements of this document.

2.2 NFPA Publications. National Fire Protection Association, 1 Batterymarch Park, P.O. Box 9101, Quincy, MA 02269-9101.

NFPA 13, *Standard for the Installation of Sprinkler Systems,* 2002 edition.

NFPA 30, *Flammable and Combustible Liquids Code,* 2000 edition.

NFPA 70, *National Electrical Code®,* 2002 edition.

NFPA 72®, National Fire Alarm Code®, 2002 edition.

NFPA 80, *Standard for Fire Doors and Fire Windows,* 1999 edition.

NFPA 99, *Standard for Health Care Facilities,* 2002 edition.

NFPA 110, *Standard for Emergency and Standby Power Systems,* 2002 edition.

NFPA 111, *Standard on Stored Electrical Energy Emergency and Standby Power Systems,* 2001 edition.

NFPA 251, *Standard Methods of Tests of Fire Endurance of Building Construction and Materials,* 1999 edition.

NFPA 252, *Standard Methods of Fire Tests of Door Assemblies,* 1999 edition.

NFPA 257, *Standard on Fire Test for Window and Glass Block Assemblies,* 2000 edition.

2.3 Other Publications.

2.3.1 ANSI Publications. American National Standards Institute, Inc., 11 West 42nd Street, 13th floor, New York, NY 10036.

ANSI A14.3, *Safety Code for Fixed Ladders,* 1992.

ICC/ANSI A117.1, *American National Standard for Accessible and Usable Buildings and Facilities*, 1998.

BHMA/ANSI A156.19, *American National Standard for Power Assist and Low Energy Power Operated Doors*, 1997.

ANSI A1264.1, *Safety Requirements for Workplace Floor and Wall Openings, Stairs and Railing Systems,* 1995.

2.3.2 ASME Publication. American Society of Mechanical Engineers, Three Park Avenue, New York, NY 10016-5990.

ASME/ANSI A17.1, *Safety Code for Elevators and Escalators,* 2000.

2.3.3 ASTM Publication. American Society for Testing and Materials, 100 Barr Harbor Drive, West Conshohocken, PA 19428-2959.

ASTM F 851, *Standard Test Method for Self-Rising Seat Mechanisms,* 1987.

2.3.4 UL Publication. Underwriters Laboratories Inc., 333 Pfingsten Road, Northbrook, IL 60062.

UL 924, *Standard for Safety Emergency Lighting and Power Equipment*, 1995.

Chapter 3 Definitions

3.1 General. The definitions contained in this chapter shall apply to the terms used in this *Code*. Where terms are not included, common usage of the terms shall apply. Words used in the present tense shall include the future; words used in the masculine gender shall include the feminine and neuter; the singular number shall include the plural and the plural shall include the singular. Where terms are not defined in this chapter, they shall be defined using their commonly accepted meanings within the context in which they are used. *Webster's Third New International Dictionary of the English Language, Unabridged,* shall be a source for commonly accepted meaning.

3.2 NFPA Official Definitions.

3.2.1* Approved. Acceptable to the authority having jurisdiction.

3.2.2* Authority Having Jurisdiction (AHJ). The organization, office, or individual responsible for approving equipment, materials, an installation, or a procedure.

3.2.3* Code. A standard that is an extensive compilation of provisions covering broad subject matter or that is suitable for adoption into law independently of other codes and standards.

3.2.4 Labeled. Equipment or materials to which has been attached a label, symbol, or other identifying mark of an organization that is acceptable to the authority having jurisdiction and concerned with product evaluation, that maintains periodic inspection of production of labeled equipment or materials, and by whose labeling the manufacturer indicates compliance with appropriate standards or performance in a specified manner.

3.2.5* Listed. Equipment, materials, or services included in a list published by an organization that is acceptable to the authority having jurisdiction and concerned with evaluation of products or services, that maintains periodic inspection of production of listed equipment or materials or periodic evaluation of services, and whose listing states that either the equipment, material, or service meets appropriate designated standards or has been tested and found suitable for a specified purpose.

3.2.6 Shall. Indicates a mandatory requirement.

3.2.7 Should. Indicates a recommendation or that which is advised but not required.

3.3 General Definitions.

3.3.1 Accessible Means of Egress. See 3.3.69.1.

3.3.2* Aisle Accessway. That initial portion of an exit access that leads to an aisle.

3.3.3 Ambulatory Health Care Facility. See 3.3.74.1.

3.3.4 Anchor Store. A department store or major merchandising center that has direct access to the covered mall but in which all required means of egress is independent of the covered mall.

3.3.5 Area.

3.3.5.1 Floor Area.

3.3.5.1.1 Gross Leasable Area. The total floor area designated for tenant occupancy and exclusive use, expressed in square meters (square feet), measured from the centerlines of adjoining partitions and exteriors of outside walls.

3.3.5.1.2 Hazardous Area. An area of a structure or building that poses a degree of hazard greater than that normal to the general occupancy of the building or structure, such as those

--`,,,`-`-`,,`,,`,`,,`---

Copyright National Fire Protection Association
Provided by IHS under license with NFPA
No reproduction or networking permitted without license from IHS

Not for Resale

areas used for the storage or use of combustibles or flammables; toxic, noxious, or corrosive materials; or heat-producing appliances.

3.3.5.1.3 Living Area. Any normally occupiable space in a residential occupancy, other than sleeping rooms or rooms that are intended for combination sleeping/living, bathrooms, toilet compartments, kitchens, closets, halls, storage or utility spaces, and similar areas.

3.3.6* Area of Refuge. An area that is either (1) a story in a building where the building is protected throughout by an approved, supervised automatic sprinkler system and has not less than two accessible rooms or spaces separated from each other by smoke-resisting partitions; or (2) a space located in a path of travel leading to a public way that is protected from the effects of fire, either by means of separation from other spaces in the same building or by virtue of location, thereby permitting a delay in egress travel from any level.

3.3.7 Atmosphere.

3.3.7.1 Common Atmosphere. The atmosphere that exists between rooms, spaces, or areas within a building that are not separated by an approved smoke barrier.

3.3.7.2 Separate Atmosphere. The atmosphere that exists between rooms, spaces, or areas that are separated by an approved smoke barrier.

3.3.8 Automatic. That which provides a function without the necessity of human intervention.

3.3.9 Barrier.

3.3.9.1* Smoke Barrier. A continuous membrane, or a membrane with discontinuities created by protected openings, where such membrane is designed and constructed to restrict the movement of smoke.

3.3.9.2* Thermal Barrier. A material that limits the average temperature rise of an unexposed surface to not more than 120°C (250°F) for a specified fire exposure complying with the standard time-temperature curve of NFPA 251, *Standard Methods of Tests of Fire Endurance of Building Construction and Materials*.

3.3.9.3 Fire Barrier (Wall). A wall, other than a fire wall, that has a fire resistance rating.

3.3.10* Birth Center. A facility in which low-risk births are expected following normal, uncomplicated pregnancies, and in which professional midwifery care is provided to women during pregnancy, birth, and postpartum.

3.3.11 Bleachers. A grandstand in which the seats are not provided with backrests.

3.3.12* Building. Any structure used or intended for supporting or sheltering any use or occupancy.

3.3.12.1* Apartment Building. A building containing three or more dwelling units with independent cooking and bathroom facilities.

3.3.12.2 Bulk Merchandising Retail Building. A building in which the sales area includes the storage of combustible materials on pallets, in solid piles, or in racks in excess of 3050 mm (120 in.) in storage height.

3.3.12.3* Covered Mall Building. A building, including the covered mall, enclosing a number of tenants and occupancies, such as retail stores, drinking and dining establishments, entertainment and amusement facilities, offices, and other similar uses, wherein two or more tenants have a main entrance into the covered mall.

3.3.12.4* Existing Building. A building erected or officially authorized prior to the effective date of the adoption of this edition of the *Code* by the agency or jurisdiction.

3.3.12.5* Flexible Plan and Open Plan Educational or Day-Care Building. A building or portion of a building designed for multiple teaching stations.

3.3.12.6* High-Rise Building. A building greater than 23 m (75 ft) in height where the building height is measured from the lowest level of fire department vehicle access to the floor of the highest occupiable story.

3.3.12.7* Special Amusement Building. A building that is temporary, permanent, or mobile and contains a device or system that conveys passengers or provides a walkway along, around, or over a course in any direction as a form of amusement arranged so that the egress path is not readily apparent due to visual or audio distractions or an intentionally confounded egress path, or is not readily available due to the mode of conveyance through the building or structure.

3.3.13 Bulk Merchandising Retail Building. See 3.3.12.2.

3.3.14 Class A Mercantile Occupancy. All stores that have an aggregate gross area of more than 2800 m^2 (30,000 ft^2) or that use more than three levels, excluding mezzanines, for sales purposes.

3.3.15* Class B Mercantile Occupancy. All stores of more than 280 m^2 (3000 ft^2) but not more than 2800 m^2 (30,000 ft^2) aggregate gross area, or that use floors above or below the street floor level for sales purposes.

3.3.16 Class C Mercantile Occupancy. All stores of not more than 280 m^2 (3000 ft^2) gross area that use a maximum of one story or one story and mezzanines for sales purposes.

3.3.17* Common Path of Travel. The portion of exit access that must be traversed before two separate and distinct paths of travel to two exits are available.

3.3.18 Court. An open, uncovered, unoccupied space, unobstructed to the sky, bounded on three or more sides by exterior building walls.

3.3.18.1 Enclosed Court. A court bounded on all sides by the exterior walls of a building or by the exterior walls and lot lines on which walls are permitted.

3.3.19 Covered Mall. A covered or roofed interior area used as a pedestrian way and connected to a building(s) or portions of a building housing single or multiple tenants.

3.3.20 Covered Mall Building. See 3.3.12.3.

3.3.21 Day-Care Home. A building or portion of a building in which more than three but not more than twelve clients receive care, maintenance, and supervision, by other than their relative(s) or legal guardian(s), for less than 24 hours per day.

3.3.22 Detention and Correctional Residential Housing Area. Sleeping areas and any contiguous day room, group activity space, or other common spaces for customary access of residents.

3.3.23 Dwelling Unit. A single unit providing complete, independent living facilities for one or more persons, including

Copyright National Fire Protection Association
Provided by IHS under license with NFPA
No reproduction or networking permitted without license from IHS
Not for Resale

permanent provisions for living, sleeping, eating, cooking, and sanitation.

3.3.24* Electroluminescent. Having the property, emanating from a light-emitting capacitor, in which alternating current excites phosphor atoms placed between electrically conductive surfaces and produces light.

3.3.25 Elevator Evacuation System. A system, including a vertical series of elevator lobbies and associated elevator lobby doors, an elevator shaft(s), and a machine room(s), that provides protection from fire effects for elevator passengers, people waiting to use elevators, and elevator equipment so that elevators can be used safely for egress.

3.3.26 Elevator Lobby. A space from which people directly enter an elevator car(s) and to which people directly leave an elevator car(s).

3.3.27 Elevator Lobby Door. A door between an elevator lobby and another building space other than the elevator shaft.

3.3.28 Emergency Access Opening. A window, panel, or similar opening in which (1) the opening has dimensions of not less than 560 mm (22 in.) in width and 610 mm (24 in.) in height and is unobstructed to allow for ventilation and rescue operations from the exterior, (2) the bottom of the opening is not more than 1120 mm (44 in.) above the floor, (3) the opening is readily identifiable from both the exterior and interior, and (4) the opening is readily openable from both the exterior and interior.

3.3.29* Evacuation Capability. The ability of occupants, residents, and staff as a group either to evacuate a building or to relocate from the point of occupancy to a point of safety.

3.3.29.1 Impractical Evacuation Capability. The inability of a group to reliably move to a point of safety in a timely manner.

3.3.29.2 Prompt Evacuation Capability. The ability of a group to move reliably to a point of safety in a timely manner that is equivalent to the capacity of a household in the general population.

3.3.29.3 Slow Evacuation Capability. The ability of a group to move reliably to a point of safety in a timely manner, but not as rapidly as members of a household in the general population.

3.3.30 Exhibit. A space or portable structure used for the display of products or services.

3.3.31* Existing. That which is already in existence on the date when this edition of the *Code* goes into effect.

3.3.32* Exit. That portion of a means of egress that is separated from all other spaces of the building or structure by construction or equipment as required to provide a protected way of travel to the exit discharge.

3.3.32.1* Horizontal Exit. A way of passage from one building to an area of refuge in another building on approximately the same level, or a way of passage through or around a fire barrier to an area of refuge on approximately the same level in the same building that affords safety from fire and smoke originating from the area of incidence and areas communicating therewith.

3.3.33 Exit Access. That portion of a means of egress that leads to an exit.

3.3.34 Exit Discharge. That portion of a means of egress between the termination of an exit and a public way.

3.3.34.1 Level of Exit Discharge. (1) The lowest story from which not less than 50 percent of the required number of exits and not less than 50 percent of the required egress capacity from such a story discharge directly outside at grade; (2) the story with the smallest elevation change needed to reach grade where no story has 50 percent or more of the required number of exits and 50 percent or more of the required egress capacity from such a story discharge directly outside at grade.

3.3.35 Exposition. An event in which the display of products or services is organized to bring together the provider and user of the products or services.

3.3.36 Exposition Facility. See 3.3.38.1.

3.3.37 Externally Illuminated. See 3.3.62.1.

3.3.38 Facility.

3.3.38.1 Exposition Facility. A convention center, hotel, or other building at which exposition events are held.

3.3.38.2* Limited Care Facility. A building or portion of a building used on a 24-hour basis for the housing of four or more persons who are incapable of self-preservation because of age, physical limitations due to accident or illness, or limitations such as mental retardation/developmental disability, mental illness, or chemical dependency.

3.3.39 Family Day-Care Home. A day-care home in which more than three but fewer than seven clients receive care, maintenance, and supervision, by other than their relative(s) or legal guardian(s), for less than 24 hours per day.

3.3.40 Festival Seating. See 3.3.88.1.

3.3.41 Fire Barrier Wall. See 3.3.9.3.

3.3.42 Fire Exit Hardware. Labeled devices for swinging fire doors installed to facilitate safe egress of persons and generally consisting of a cross bar and various types of latch mechanisms that cannot hold the latch in a retracted locked position. [**80:**3.3]

3.3.43 Fire Protection Rating. See 3.3.86.1.

3.3.44 Fire Resistance Rating. See 3.3.86.2.

3.3.45 Flexible Plan and Open Plan Educational Occupancy or Day-Care Building. See 3.3.12.5.

3.3.46 Floor Area.

3.3.46.1* Gross Floor Area. The floor area within the inside perimeter of the outside walls of the building under consideration with no deduction for hallways, stairs, closets, thickness of interior walls, columns, or other features.

3.3.46.2 Net Floor Area. The floor area that is the actual occupied area, not including accessory unoccupied areas or thickness of walls.

3.3.47 General Industrial Occupancy. See 3.3.74.8.1.

3.3.48 Grandstand. A structure that provides tiered or stepped seating.

3.3.49 Gridiron. The structural framing over a stage, supporting equipment for hanging or flying scenery and other stage effects.

3.3.50 Gross Leasable Area. See 3.3.5.1.1.

Copyright National Fire Protection Association
Provided by IHS under license with NFPA
No reproduction or networking permitted without license from IHS
Not for Resale

3.3.51 Group Day-Care Home. A day-care home in which at least seven but not more than twelve clients receive care, maintenance, and supervision, by other than their relative(s) or legal guardian(s), for less than 24 hours per day.

3.3.52 Guard. A vertical protective barrier erected along exposed edges of stairways, balconies, and similar areas.

3.3.53 Guest Room. An accommodation combining living, sleeping, sanitary, and storage facilities within a compartment.

3.3.54 Guest Suite. An accommodation with two or more contiguous rooms comprising a compartment, with or without doors between such rooms, that provides living, sleeping, sanitary, and storage facilities.

3.3.55 Handrail. A bar, pipe, or similar member designed to furnish persons with a handhold.

3.3.56 Hazardous Area. See 3.3.5.1.2.

3.3.57 High-Hazard Industrial Occupancy. See 3.3.74.8.2.

3.3.58 High-Rise Building. See 3.3.12.6.

3.3.59 Horizontal Exit. See 3.3.32.1.

3.3.60 Hospital. A building or portion thereof used on a 24-hour basis for the medical, psychiatric, obstetrical, or surgical care of four or more inpatients.

3.3.61* Hotel. A building or groups of buildings under the same management in which there are sleeping accommodations for more than 16 persons and primarily used by transients for lodging with or without meals.

3.3.62 Illuminated.

3.3.62.1* Externally Illuminated. Having the property of emanating from a source that is contained outside of the device or sign legend area that is to be illuminated.

3.3.62.2* Internally Illuminated. Having the property of emanating from a source that is contained inside the device or legend that is illuminated.

3.3.63 Internally Illuminated. See 3.3.62.2.

3.3.64 Level of Exit Discharge. See 3.3.34.1.

3.3.65 Life Safety Evaluation. A written review dealing with the adequacy of life safety features relative to fire, storm, collapse, crowd behavior, and other related safety considerations.

3.3.66 Limited Care Facility. See 3.3.38.2.

3.3.67 Living Area. See 3.3.5.1.3.

3.3.68 Lodging or Rooming House. A building or portion thereof that does not qualify as a one- or two-family dwelling, that provides sleeping accommodations for a total of 16 or fewer people on a transient or permanent basis, without personal care services, with or without meals, but without separate cooking facilities for individual occupants.

3.3.69* Means of Egress. A continuous and unobstructed way of travel from any point in a building or structure to a public way consisting of three separate and distinct parts: (1) the exit access, (2) the exit, and (3) the exit discharge.

3.3.69.1 Accessible Means of Egress. A path of travel, usable by a person with a severe mobility impairment, that leads to a public way or an area of refuge.

3.3.70 Means of Escape. A way out of a building or structure that does not conform to the strict definition of *means of egress* but does provide an alternate way out.

3.3.71 Mobility Impairment (Severe). The ability to move to stairs but without the ability to use the stairs.

3.3.72 Multilevel Play Structure. See 3.3.103.1.

3.3.73 Nursing Home. A building or portion of a building used on a 24-hour basis for the housing and nursing care of four or more persons who, because of mental or physical incapacity, might be unable to provide for their own needs and safety without the assistance of another person.

3.3.74 Occupancy. The purpose for which a building or portion thereof is used or intended to be used.

3.3.74.1 Ambulatory Health Care Occupancy. A building or portion thereof used to provide services or treatment simultaneously to four or more patients that (1) provides, on an outpatient basis, treatment for patients that renders the patients incapable of taking action for self-preservation under emergency conditions without the assistance of others; or (2) provides, on an outpatient basis, anesthesia that renders the patients incapable of taking action for self-preservation under emergency conditions without the assistance of others.

3.3.74.2* Assembly Occupancy. An occupancy (1) used for a gathering of 50 or more persons for deliberation, worship, entertainment, eating, drinking, amusement, awaiting transportation, or similar uses; or (2) used as a special amusement building, regardless of occupant load.

3.3.74.3* Business Occupancy. An occupancy used for account and record keeping or the transaction of business other than mercantile.

3.3.74.4* Day-Care Occupancy. An occupancy in which four or more clients receive care, maintenance, and supervision, by other than their relatives or legal guardians, for less than 24 hours per day.

3.3.74.5* Detention and Correctional Occupancy. An occupancy used to house four or more persons under varied degrees of restraint or security where such occupants are mostly incapable of self-preservation because of security measures not under the occupants' control.

3.3.74.6* Educational Occupancy. An occupancy used for educational purposes through the twelfth grade by six or more persons for four or more hours per day or more than 12 hours per week.

3.3.74.7* Health Care Occupancy. An occupancy used for purposes of medical or other treatment or care of four or more persons where such occupants are mostly incapable of self-preservation due to age, physical or mental disability, or because of security measures not under the occupants' control.

3.3.74.8* Industrial Occupancy. An occupancy in which products are manufactured or in which processing, assembling, mixing, packaging, finishing, decorating, or repair operations are conducted.

3.3.74.8.1* General Industrial Occupancy An industrial occupancy in which ordinary and low hazard industrial operations are conducted in buildings of conventional design suitable for various types of industrial processes.

Copyright National Fire Protection Association
Provided by IHS under license with NFPA
No reproduction or networking permitted without license from IHS
Not for Resale

3.3.74.8.2* High-Hazard Industrial Occupancy. An industrial occupancy in which industrial operations that include high hazard materials, processes, or contents are conducted.

3.3.74.8.3 Special-Purpose Industrial Occupancy. An industrial occupancy in which ordinary and low hazard industrial operations are conducted in buildings designed for and suitable only for particular types of operations, characterized by a relatively low density of employee population, with much of the area occupied by machinery or equipment.

3.3.74.9* Mercantile Occupancy. An occupancy used for the display and sale of merchandise.

3.3.74.10 Mixed Occupancy. An occupancy in which two or more classes of occupancy exist in the same building or structure and where such classes are intermingled so that separate safeguards are impracticable.

3.3.74.11* Residential Occupancy. An occupancy that provides sleeping accommodations for purposes other than health care or detention and correctional.

3.3.74.12* Residential Board and Care Occupancy. A building or portion thereof that is used for lodging and boarding of four or more residents, not related by blood or marriage to the owners or operators, for the purpose of providing personal care services.

3.3.74.12.1 Large Residential Board and Care Occupancy. A board and care occupancy that provides sleeping accommodations for more than 16 residents who receive personal care.

3.3.74.12.2 Small Residential Board and Care Occupancy. A board and care occupancy that provides sleeping accommodations for not more than 16 residents who receive personal care.

3.3.74.13* Storage Occupancy. An occupancy used primarily for the storage or sheltering of goods, merchandise, products, vehicles, or animals.

3.3.75 Occupant Load. The total number of persons that might occupy a building or portion thereof at any one time.

3.3.76 Occupiable Story. See 3.3.101.1.

3.3.77 Open Structure. See 3.3.103.2.

3.3.78 Open-Air Parking Structure. See 3.3.103.3.

3.3.79 Outside Stair. A stair with not less than one side open to the outside air.

3.3.80 Panic Hardware. A door-latching assembly incorporating a device that releases the latch upon the application of a force in the direction of egress travel.

3.3.81* Personal Care. The care of residents who do not require chronic or convalescent medical or nursing care.

3.3.82* Photoluminescent. Having the property of emitting light that continues for a length of time after excitation by visible or invisible light has been removed.

3.3.83 Point of Safety. A location that (a) is exterior to and away from a building; or (b) is within a building of any type construction protected throughout by an approved automatic sprinkler system and that is either (1) within an exit enclosure meeting the requirements of this *Code*, or (2) within another portion of the building that is separated by smoke barriers, with not less than a ½-hour fire resistance rating, and that portion of the building has access to a means of escape or exit that conforms to the requirements of this *Code* and does not necessitate return to the area of fire involvement; or (c) is within a building of Type I, Type II(222), Type II(111), Type III(211), Type IV, or Type V(111) construction and is either (1) within an exit enclosure meeting the requirements of this *Code*, or (2) within another portion of the building that is separated by smoke barriers, with not less than a ½-hour fire resistance rating, and that portion of the building has access to a means of escape or exit that conforms to the requirements of this *Code* and does not necessitate return to the area of fire involvement.

3.3.84 Public Way. A street, alley, or other similar parcel of land essentially open to the outside air deeded, dedicated, or otherwise permanently appropriated to the public for public use and having a clear width and height of not less than 3 m (10 ft).

3.3.85 Ramp. A walking surface that has a slope steeper than 1 in 20.

3.3.86 Rating.

3.3.86.1 Fire Protection Rating. The time, in minutes or hours, that materials and assemblies used as opening protection have withstood a fire exposure as established in accordance with test procedures of NFPA 252, *Standard Methods of Fire Tests of Door Assemblies*, and NFPA 257, *Standard on Fire Test for Window and Glass Block Assemblies*, as applicable. [**850:**3.3]

3.3.86.2 Fire Resistance Rating. The time, in minutes or hours, that materials or assemblies have withstood a fire exposure as established in accordance with the test procedures of NFPA 251, *Standard Methods of Tests of Fire Endurance of Building Construction and Materials.*

3.3.87 Sally Port (Security Vestibule). A compartment provided with two or more doors where the intended purpose is to prevent continuous and unobstructed passage by allowing the release of only one door at a time.

3.3.88 Seating.

3.3.88.1* Festival Seating. A form of audience/spectator accommodation in which no seating, other than a floor or ground surface, is provided for the audience/spectators gathered to observe a performance.

3.3.88.2 Smoke-Protected Assembly Seating. Seating served by means of egress that is not subject to smoke accumulation within or under the structure.

3.3.89 Self-Closing. Equipped with an approved device that ensures closing after opening.

3.3.90* Self-Luminous. Illuminated by a self-contained power source and operated independently of external power sources.

3.3.91* Self-Preservation (Day-Care Occupancy). The ability of a client to evacuate a day-care occupancy without direct intervention by a staff member.

3.3.92 Separate Atmosphere. See 3.3.7.2.

3.3.93 Severe Mobility Impairment. See 3.3.71.

3.3.94 Smoke Barrier. See 3.3.9.1.

3.3.95* Smoke Compartment. A space within a building enclosed by smoke barriers on all sides, including the top and bottom.

Copyright National Fire Protection Association
Provided by IHS under license with NFPA
No reproduction or networking permitted without license from IHS
Not for Resale

3.3.96* Smoke Partition. A continuous membrane that is designed to form a barrier to limit the transfer of smoke.

3.3.97* Smokeproof Enclosure. A stair enclosure designed to limit the movement of products of combustion produced by a fire.

3.3.98 Smoke-Protected Assembly Seating. See 3.3.88.2.

3.3.99 Special Amusement Building. See 3.3.12.7.

3.3.100 Special-Purpose Industrial Occupancy. See 3.3.74.8.3.

3.3.101 Story. The portion of a building located between the upper surface of a floor and the upper surface of the floor or roof next above.

3.3.101.1* Occupiable Story. A story occupied by people on a regular basis. Stories used exclusively for mechanical equipment rooms, elevator penthouses, and similar spaces are not occupiable stories.

3.3.102* Street Floor. A story or floor level accessible from the street or from outside the building at ground level, with the floor level at the main entrance not more than three risers above or below ground level, and arranged and utilized to qualify as the main floor.

3.3.103* Structure. That which is built or constructed.

3.3.103.1 Multilevel Play Structure. A structure that consists of tubes, slides, crawling areas, and jumping areas, located within a building, and used for climbing and entertainment, generally by children.

3.3.103.2* Open Structure. A structure that supports equipment and operations not enclosed within building walls.

3.3.103.3 Open-Air Parking Structure. A structure used for the parking or storage of motor vehicles that have (1) uniformly distributed openings in exterior walls on not less than two sides totaling not less than 40 percent of the building perimeter, (2) aggregate areas of such openings in exterior walls in each level not less than 20 percent of the total perimeter wall area of each level, and (3) interior wall lines and columns not less than 20 percent open with openings distributed to allow ventilation.

3.3.103.4* Underground Structure. A structure or portions of a structure in which the floor level is below the level of exit discharge.

3.3.103.5 Water-Surrounded Structure. A structure fully surrounded by water.

3.3.103.6 Windowless Structure. A structure or portions of a structure lacking emergency access openings.

3.3.104 Thermal Barrier. See 3.3.9.2.

3.3.105 Tower. An enclosed independent structure or portion of a building with elevated levels for support of equipment or occupied for observation, control, operation, signaling, or similar limited use where (1) the elevated levels are provided to allow adequate observation or line-of-sight for personnel or equipment, and (2) the levels within the tower below the observation level and equipment room for that level are not occupied.

3.3.106 Underground Structure. See 3.3.103.4.

3.3.107 Use Condition I — Free Egress — Detention and Correctional Occupancy. Free movement is allowed from sleeping areas and other spaces where access or occupancy is permitted to the exterior via means of egress that meet the necessary requirements.

3.3.108 Use Condition II — Zoned Egress — Detention and Correctional Occupancy. Free movement is allowed from sleeping areas and any other occupied smoke compartment to one or more other smoke compartments.

3.3.109 Use Condition III — Zoned Impeded Egress — Detention and Correctional Occupancy. Free movement is allowed within individual smoke compartments with egress impeded by remote-controlled release of means of egress from such smoke compartment to another smoke compartment.

3.3.110 Use Condition IV — Impeded Egress — Detention and Correctional Occupancy. Free movement is restricted from an occupied space. Remote-controlled release is provided to permit movement from all sleeping rooms, activity spaces, and other occupied areas within the smoke compartment to another smoke compartment.

3.3.111 Use Condition V — Contained — Detention and Correctional Occupancy. Free movement is restricted from an occupied space. Staff-controlled manual release at each door is provided to permit movement from all sleeping rooms, activity spaces, and other occupied areas within the smoke compartment to another smoke compartment.

3.3.112 Wall (Fire Barrier). See 3.3.9.3.

3.3.113 Water-Surrounded Structure. See 3.3.103.5.

3.3.114 Windowless Structure. See 3.3.103.6.

3.3.115 Yard. An open, unoccupied space, other than a court, unobstructed from the ground to the sky on the lot on which a building is situated.

Chapter 4 General

4.1 Mixed Occupancies.

4.1.1 Egress for Mixed Occupancies.

4.1.1.1 Where the means of egress of two or more classes of occupancy are intermingled in the same building or structure, the means of egress shall comply with the most restrictive requirements of the occupancies involved.

4.1.1.2 Where occupancies are separated by horizontal exits, egress through the horizontal exit shall not be the basis for designation as a mixed occupancy.

4.1.2 Special Mixed Occupancy Provisions for Health Care Occupancies.

4.1.2.1 All means of egress from health care occupancies that traverse non–health care spaces shall conform to the requirements of this *Code* for health care occupancies.

Exception: Egress through a horizontal exit into other contiguous occupancies that do not conform with health care egress provisions but that do comply with the requirements set forth in the appropriate occupancy chapter of this Code shall be permitted, provided the occupancy does not contain high-hazard contents. The horizontal exit shall comply with the requirements of 5.2.4.

4.1.2.2 Egress provisions for areas of health care facilities that correspond to other occupancies shall meet the corresponding requirements of this *Code* for such occupancies. Where the clinical needs of the occupant necessitate locking the means

Copyright National Fire Protection Association
Provided by IHS under license with NFPA
No reproduction or networking permitted without license from IHS
Not for Resale

of egress, staff shall be present for the supervised release of occupants during all times of use.

4.1.2.3 Non–health care related occupancies classified as containing high-hazard contents shall not be permitted in buildings housing health care occupancies.

4.1.3 Special Mixed Occupancy Provisions for Detention and Correctional Occupancies.

4.1.3.1 Egress provisions for areas of detention and correctional facilities that correspond to other occupancies shall meet the corresponding requirements of this *Code* for such occupancies. Where security operations necessitate locking the required means of egress, staff shall be present for the supervised release of occupants during all times of use.

4.1.3.2 All means of egress from detention and correctional occupancies that traverse other use areas shall conform, as a minimum, to the requirements of this *Code* for detention and correctional occupancies.

Exception: Egress through a horizontal exit into other contiguous occupancies that do not conform to detention and correctional occupancy egress provisions but that do comply with the requirements set forth in the appropriate occupancy chapter of this Code shall be permitted, provided the occupancy does not contain high-hazard contents. The horizontal exit shall comply with the requirements of 5.2.4.

4.1.3.3 Nondetention or noncorrectional related occupancies classified as containing high-hazard contents shall not be permitted in buildings housing detention or correctional occupancies.

4.1.4* Special Mixed Occupancy Provisions for Residential Occupancies.

4.1.4.1 No dwelling unit of a residential occupancy shall have its sole means of egress pass through any nonresidential occupancy in the same building.

Exception: Day-care homes within a dwelling unit.

4.1.4.2 No residential board and care occupancy shall have its sole means of egress pass through any nonresidential or non–health care occupancy in the same building.

4.1.4.3 No multiple dwelling unit of a residential occupancy shall be located above any nonresidential occupancy.

Exception No. 1: Where the dwelling unit of the residential occupancy and exits therefrom are separated from the nonresidential occupancy by construction having a fire resistance rating of not less than 1 hour.

Exception No. 2: Where the nonresidential occupancy is protected throughout by an approved, supervised automatic sprinkler system.

4.1.4.4 No residential board and care occupancy shall be located above any nonresidential or non–health care occupancy.

Exception: Where the residential board and care occupancy and exits therefrom are separated from the nonresidential or non–health care occupancy by construction having a fire resistance rating of not less than 2 hours.

4.2 Hazard of Contents.

4.2.1 General.

4.2.1.1 The hazard of contents, for the purpose of this *Code*, shall be the relative danger of the start and spread of fire, the danger of smoke or gases generated, and the danger of explosion or other occurrence potentially endangering the lives and safety of the occupants of the building or structure.

4.2.1.2 Hazard of contents shall be determined by the authority having jurisdiction on the basis of the character of the contents and the processes or operations conducted in the building or structure.

4.2.1.3 Where different degrees of hazard of contents exist in different parts of a building or structure, the most hazardous shall govern the classification for the purpose of this *Code* unless hazardous areas are separated or protected as required by the building code.

4.2.2 Classification of Hazard of Contents.

4.2.2.1 General. The hazard of contents of any building or structure shall be classified as low, ordinary, or high in accordance with 4.2.2.2, 4.2.2.3, and 4.2.2.4.

4.2.2.2 Low Hazard. Low-hazard contents shall be classified as those of such low combustibility that no self-propagating fire therein can occur.

4.2.2.3* Ordinary Hazard. Ordinary-hazard contents shall be classified as those that are likely to burn with moderate rapidity or to give off a considerable volume of smoke.

4.2.2.4* High Hazard. High-hazard contents shall be classified as those that are likely to burn with extreme rapidity or from which explosions are likely. *(For means of egress requirements, see Section 5.11.)*

Chapter 5 New Construction

5.1* General.

5.1.1 Separation of Means of Egress.

5.1.1.1* Exit Access Corridors. Corridors used as exit access shall be separated from other parts of the building by walls having a minimum 1-hour fire resistance rating and doors having a minimum 20-minute fire protection rating unless otherwise specified by 5.1.1.1.1 through 5.1.1.1.9.

5.1.1.1.1 Assembly Occupancies.

(A) Corridor and lobby protection shall not be required where assembly rooms served by the corridor or lobby have at least 50 percent of their exit capacity discharging directly to the outside, independent of corridors and lobbies.

(B) Corridor and lobby protection shall not be required in buildings protected throughout by an approved, supervised automatic sprinkler system.

(C) Lobbies that serve only one assembly area and that meet the requirements for intervening rooms shall not be required to have a fire resistance rating. *(See 5.5.1.7.)*

5.1.1.1.2 Educational Occupancies.

(A) Corridor protection shall not be required where all spaces normally subject to student occupancy have at least one door opening directly to the outside or to an exterior exit access balcony or corridor.

(B) In buildings protected throughout by an approved, supervised automatic sprinkler system, corridor walls shall not be required to be rated, provided such walls, in conjunction with the openings therein and ceilings at which they terminate, resist the passage of smoke.

Copyright National Fire Protection Association
Provided by IHS under license with NFPA
No reproduction or networking permitted without license from IHS
Not for Resale

(C) Toilet rooms shall not be required to be separated from corridors, provided they are separated from all other spaces by walls having not less than a 1-hour fire resistance rating.

5.1.1.1.3 Health Care Occupancies.

(A)* General. Health care occupancy corridors shall be separated from all other areas by partitions complying with (B) through (E).

Exception No. 1: Spaces shall be permitted to be unlimited in area and open to the corridor under the following conditions:

(1) The spaces are not used for patient sleeping rooms, treatment rooms, or hazardous areas.
(2) The corridors onto which the spaces open in the same smoke compartment are protected by an electrically supervised, automatic smoke detection system, or the smoke compartment in which the space is located is protected throughout by quick-response sprinklers.
(3) The open space is protected by an electrically supervised, automatic smoke detection system, or the entire space is arranged and located to permit direct supervision by the facility staff from a nurses' station or similar space.
(4) The space does not obstruct access to required exits.

Exception No. 2: Waiting areas shall be permitted to be open to the corridor under the following conditions:

(1) The aggregate waiting area in each smoke compartment does not exceed 55.7 m^2 (600 ft^2).
(2) Each area is protected by an electrically supervised, automatic smoke detection system, or each area is arranged and located to permit direct supervision by the facility staff from a nurses' station or similar space.
(3) The area does not obstruct access to required exits.

Exception No. 3: Space for nurses' stations shall be permitted to open to the corridor.

Exception No. 4: In a limited care facility, group meeting or multipurpose therapeutic spaces shall be permitted to open to the corridor under the following conditions:

(1) The space is not a hazardous area.
(2) The space is protected by an electrically supervised, automatic smoke detection system, or the space is arranged and located to permit direct supervision by the facility staff from the nurses' station or similar space.
(3) The area does not obstruct access to required exits.

(B)* Construction of Health Care Occupancy Corridor Walls. Corridor walls shall form a barrier to limit the transfer of smoke. Such walls shall be permitted to terminate at the ceiling where the ceiling is constructed to limit the transfer of smoke. A fire resistance rating shall not be required for corridor walls.

(C)* Health Care Occupancy Corridor Doors. Corridor doors in health care occupancies shall meet the following requirements:

(1)*Doors protecting corridor openings shall be constructed to resist the passage of smoke. Doors to toilet rooms, bathrooms, shower rooms, sink closets, and similar auxiliary spaces that do not contain flammable or combustible materials shall be exempt from this requirement. Compliance with NFPA 80, *Standard for Fire Doors and Fire Windows*, shall not be required. Clearance between the bottom of the door and the floor covering not exceeding 25 mm (1 in.) shall be permitted for corridor doors.
(2) Doors shall be provided with positive latching hardware. Doors to toilet rooms, bathrooms, shower rooms, sink closets, and similar auxiliary spaces that do not contain flammable or combustible materials shall be exempt from this requirement. Roller latches shall be prohibited.
(3) Hold-open devices that release when the door is pushed or pulled shall be permitted.
(4) Door-closing devices shall not be required on doors in corridor wall openings other than those serving required exits, smoke barriers, or enclosures of vertical openings and hazardous areas.
(5) Nonrated, factory- or field-applied protective plates extending not more than 1220 mm (48 in.) above the bottom of the door shall be permitted.
(6) Dutch doors shall be permitted where they conform to 5.1.1.1.3(C), where both upper leaf and lower leaf are equipped with a latching device, and where the meeting edges of the upper and lower leaves are equipped with an astragal, rabbet, or bevel.

(D) Health Care Occupancy Corridor Transfer Grilles. Transfer grilles, regardless of whether they are protected by fusible link-operated dampers, shall not be used in health care occupancy corridor walls or doors.

Exception: Doors to toilet rooms, bathrooms, shower rooms, sink closets, and similar auxiliary spaces that do not contain flammable or combustible materials shall be permitted to have ventilating louvers or to be undercut.

(E) Health Care Occupancy Corridor Openings. In other than smoke compartments containing patient bedrooms, miscellaneous openings such as mail slots, pharmacy pass-through windows, laboratory pass-through windows, and cashier pass-through windows shall be permitted to be installed in corridor vision panels or doors without special protection if the aggregate area of openings per room does not exceed 520 cm^2 (80 $in.^2$) and the openings are installed at or below half the distance from the floor to the room ceiling.

5.1.1.1.4 Detention and Correctional Occupancies. See 5.5.1.26.

5.1.1.1.5 Residential Occupancies.

(A) In hotels, dormitories, or apartment buildings, in buildings protected throughout by an approved, supervised automatic sprinkler system, corridor walls shall have a minimum ½-hour fire resistance rating.

(B) In hotels, dormitories, or apartment buildings, spaces shall be permitted to be unlimited in area and open to the corridor under the following conditions:

(1) The spaces are not used for guest rooms or guest suites, dwelling units, or hazardous areas.
(2) The building is protected throughout by an approved, supervised automatic sprinkler system.
(3) The space does not obstruct access to required exits.

(C) In lodging and rooming houses, all sleeping rooms shall be separated from escape route corridors by walls and doors that are smoke resistant. There shall be no louvers or operable transoms or other passages penetrating the wall except properly installed heating and utility installations other than transfer grilles. Transfer grilles shall be prohibited. Doors shall be provided with latches or other mechanisms suitable for keeping the doors closed. No doors shall be arranged to prevent the occupant from closing the door. In nonsprinklered build-

--`,,`-`-`,,`,,`,`,,`---
Copyright National Fire Protection Association
Provided by IHS under license with NFPA
No reproduction or networking permitted without license from IHS
Not for Resale

ings, doors shall be self-closing or automatic-closing upon detection of smoke.

5.1.1.1.6 Large Residential Board and Care Occupancy Means of Egress Corridors.

(A) Access shall be provided from every resident use area to at least one means of egress that is separated from all sleeping rooms by walls complying with (C) through (F).

(B) Sleeping rooms shall be separated from corridors, living areas, and kitchens by walls complying with (C) through (F).

(C) Walls required by (A) or (B) shall have a fire resistance rating of not less than ½ hour.

Exception: In conversions from an existing residential or health care occupancy to a residential board and care occupancy, no fire resistance rating shall be required, but the wall shall resist the passage of smoke.

(D) Doors in walls required by (A) or (B) shall have a fire protection rating of not less than 20 minutes. *(See 7.2.1 for exemptions to these requirements.)*

Exception: Walls without a fire resistance rating that are required only to resist the passage of smoke shall be permitted to have doors without a fire protection rating that resist the passage of smoke.

(E) Walls and doors required by (A) or (B) shall be constructed as smoke partitions in accordance with 5.13. The provisions of 5.13.3.5 shall not apply. There shall be no louvers, transfer grilles, operable transoms, or other air passages penetrating such walls or doors, except properly installed heating and utility installations.

(F) Doors to hazardous areas, vertical openings, exits, and exit passageways shall be self-closing or automatic-closing.

5.1.1.1.7 Mercantile and Business Occupancies.

(A) There shall be no requirements for corridor wall construction where exits are available from an open floor area.

(B) Corridors shall not be required within a space occupied by a single tenant.

(C) Corridors shall not be required within buildings protected throughout by an approved, supervised automatic sprinkler system.

5.1.1.1.8 Industrial and Storage Occupancies. There shall be no requirements for corridor wall construction.

5.1.1.1.9 Ambulatory Health Care Facilities. Pass-through windows and other miscellaneous openings shall be permitted to be installed in corridor vision panels or doors without special protection if the aggregate area of openings per room does not exceed 0.015 m^2 (0.14 ft^2) and the openings are installed at or below half the distance from the floor to the room ceiling. For rooms protected throughout by an approved, supervised automatic sprinkler system, the aggregate area of openings per room shall not exceed 0.05 m^2 (0.55 ft^2).

5.1.1.2 Exits.

5.1.1.2.1 Where an exit is required in this *Code* to be separated from other parts of the building, the separating construction shall meet the requirements in (A) through (F).

(A) The separation shall have not less than a 1-hour fire resistance rating where the exit connects three stories or less. Opening protectives shall have not less than a 1-hour fire protection rating.

(B) The separation shall have not less than a 2-hour fire resistance rating where the exit connects four or more stories. It shall be supported by construction having not less than a 2-hour fire resistance rating. Opening protectives shall have not less than a 1½-hour fire protection rating.

Exception: In hotels, dormitories, and apartment buildings protected throughout by an approved, supervised automatic sprinkler system, exit enclosures shall have a fire resistance rating of not less than 1 hour, and the fire protection rating of doors shall be not less than 1 hour.

(C) Openings therein shall be protected by fire door assemblies that are equipped with door closers that comply with 5.2.1.8.

(D)* Openings in exit enclosures shall be limited to those necessary for access to the enclosure from normally occupied spaces and corridors and for egress from the enclosure.

Exception: In covered mall buildings, rooms housing building service equipment, janitor closets, and service elevators shall be permitted to open directly onto exit passageways under the following conditions:

(1) The required fire resistance rating between such rooms or areas and the exit passageway shall be maintained in accordance with 5.1.1.2.
(2) Such rooms or areas shall be protected by an approved, supervised automatic sprinkler system. The exceptions in NFPA 13, Standard for the Installation of Sprinkler Systems, that would permit the omission of sprinklers from such rooms shall not apply.
(3) Service elevators opening into the exit passageway shall not open into areas other than exit passageways.
(4) Where exit stair enclosures discharge into the exit passageway, Exception No. 2 to 5.2.1.5.3 shall not apply.

(E) Penetrations into and openings through an exit enclosure assembly shall be prohibited except for electrical conduit serving the stairway, required exit doors, ductwork and equipment necessary for independent stair pressurization, water or steam piping necessary for the heating or cooling of the exit enclosure, sprinkler piping, and standpipes.

Exception: Penetrations for fire alarm circuits shall be permitted within enclosures where fire alarm circuits are installed in metallic conduit and penetrations are protected.

(F) Penetrations or communicating openings shall be prohibited between adjacent exit enclosures.

5.1.1.2.2 An exit enclosure shall provide a continuous protected path of travel to an exit discharge.

5.1.1.2.3* An exit enclosure shall not be used for any purpose that has the potential to interfere with its use as an exit and, if so designated, as an area of refuge. *(See also 5.2.2.5.3.)*

5.1.2* Headroom. Means of egress shall be designed and maintained to provide headroom as provided in other sections of this *Code* and shall be not less than 2285 mm (90 in.) with projections from the ceiling not less than 2030 mm (80 in.) nominal height above the finished floor. The minimum ceiling height shall be maintained for not less than two-thirds of the ceiling area of any room or space, provided the ceiling height of remaining ceiling area is not less than 2 m (6 ft 8 in.). Headroom on stairs shall be a minimum of 2030 mm (80 in.) and shall be measured vertically above a plane parallel to and tangent with the most forward projection of the stair tread.

Copyright National Fire Protection Association
Provided by IHS under license with NFPA
No reproduction or networking permitted without license from IHS
Not for Resale

Exception: Industrial equipment access walkways, platforms, ramps, and stairs that serve as a component of the means of egress from the involved equipment and do not serve more than 20 people shall be permitted a headroom of not less than 2030 mm (80 in.).

5.1.3 Walking Surfaces in the Means of Egress.

5.1.3.1 General. Walking surfaces in the means of egress shall comply with 5.1.3.2 through 5.1.3.4.

5.1.3.2 Changes in Elevation. Abrupt changes in elevation of walking surfaces shall not exceed 6.3 mm (¼ in.). Changes in elevation exceeding 6.3 mm (¼ in.) but not exceeding 13 mm (½ in.) shall be beveled 1 to 2. Changes in elevation exceeding 13 mm (½ in.) shall be considered a change in level and shall be subject to the requirements of 5.1.5. *(See 7.2.2 for exemption to these requirements.)*

5.1.3.3 Level. Walking surfaces shall be nominally level. The slope of a walking surface in the direction of travel shall not exceed 1 in 20 unless the ramp requirements of 5.2.5 are met. The slope perpendicular to the direction of travel shall not exceed 1 in 48. *(See 7.2.2 for exemption to these requirements.)*

5.1.3.4* Slip Resistance. Walking surfaces shall be slip resistant under foreseeable conditions. The walking surface of each element in the means of egress shall be uniformly slip resistant along the natural path of travel. *(See 7.2.2 for exemption to these requirements.)*

5.1.4 Changes in Level in Means of Egress.

5.1.4.1 Changes in level in means of egress shall be either by a ramp or by a stair if the elevation difference is more than 305 mm (12 in.).

5.1.4.2* Changes in level in means of egress not in excess of 305 mm (12 in.) shall be achieved either by a ramp or by a stair that complies with the requirements of 5.2.2. The presence and location of ramped portions of walkways shall be readily apparent. The tread depth of such stair shall be not less than 330 mm (13 in.), and the presence and location of each step shall be readily apparent.

Exception: Industrial equipment access stairs that serve as a component of the means of egress from the involved equipment and do not serve more than 20 people shall be permitted a tread depth of not less than 25.4 cm (10 in.).

5.1.5 Guards. Guards in accordance with 5.2.2.4 shall be provided at the open sides of means of egress that are more than 760 mm (30 in.) above the floor or the grade below.

5.1.6 Impediments to Egress. Any device or alarm installed to restrict the improper use of a means of egress shall be designed and installed so that it cannot, even in case of failure, impede or prevent emergency use of such means of egress.

Exception No. 1: Special locking arrangements for means of egress doors as specified in 5.2.1.6.

Exception No. 2: As provided for health care occupancies and detention and correctional occupancies in 5.2.1.

5.2 Means of Egress Components.

5.2.1 Doors.

5.2.1.1 General.

5.2.1.1.1 A door assembly shall be permitted in a means of egress. A door assembly in a means of egress shall conform to the general requirements of Section 5.1 and to the special requirements of 5.2.1. Such an assembly shall be designated as a *door.*

5.2.1.1.2 Every door and every principal entrance that is required to serve as an exit shall be designed and constructed so that the path of egress travel is obvious and direct. Windows that, because of their physical configuration or design and the materials used in their construction, have the potential to be mistaken for doors shall be made inaccessible to the occupants by barriers or railings.

5.2.1.1.3* For the purposes of Section 5.2, a building shall be considered to be occupied at any time it is open for general occupancy, open to the public, or at any other time it is occupied by more than 10 persons.

5.2.1.2 Width.

5.2.1.2.1* Egress Capacity Width. In determining the egress width for swinging doors for purposes of calculating capacity, only the clear width of the doorway when the door is open 90 degrees shall be measured. In determining the egress width for other types of doors for purposes of calculating capacity, only the clear width of the doorway when the door is in the full open position shall be measured. Clear width of doorways shall be measured between the face of the door and the stop in accordance with 5.3.2. *(See 7.2.3 for exemption to these requirements.)*

5.2.1.2.2* Minimum Width Measurement. For purposes of determining minimum door width, the door leaf width shall be used unless clear width is specified. Where clear width is specified, there shall be no projections into the required clear door opening width, measured in accordance with 5.2.1.2.1, lower than 865 mm (34 in.) above the floor or ground. Projections into the required clear door opening width that are not less than 865 mm (34 in.) but that do not exceed 2030 mm (80 in.) above the floor or ground shall be limited to the hinge side of each door opening and shall not exceed 100 mm (4 in.). Projections exceeding 2030 mm (80 in.) above the floor or ground shall not be limited.

5.2.1.2.3 Door openings in means of egress shall be not less than 810 mm (32 in.) in clear width. Where a pair of doors is provided, at least one of the doors shall provide not less than a 810 mm (32 in.) clear width opening.

Exception No. 1: Exit access doors serving a room not larger than 6.5 m^2 (70 ft^2) and not required to be accessible to persons in wheelchairs shall be not less than 610 mm (24 in.) in door width.

Exception No. 2: Doors serving a building or portion thereof not required to be accessible to persons with severe mobility impairments shall be permitted to be 710 mm (28 in.) in door leaf width.

Exception No. 3: In detention and correctional occupancies, door openings to resident sleeping rooms shall be not less than 710 mm (28 in.) in clear width.

Exception No. 4: Doors within dwelling units shall be not less than 710 mm (28 in.) wide, except bathroom doors shall be not less than 610 mm (24 in.) wide.

Exception No. 5: A power-operated door leaf located within a two-leaf opening shall be exempt from the minimum 810-mm (32-in.) single-leaf requirement in accordance with Exception No. 2 to 5.2.1.9.1.

Exception No. 6: This requirement shall not apply to revolving doors as provided in 5.2.1.10.

5.2.1.2.4 In health care occupancies, the minimum clear width for doors in the means of egress from sleeping rooms;

Copyright National Fire Protection Association
Provided by IHS under license with NFPA
No reproduction or networking permitted without license from IHS
Not for Resale

diagnostic and treatment areas such as X-ray, surgery, or physical therapy; and nursery rooms shall be as required in (A) and (B).

(A) In hospitals and nursing homes, the minimum clear width for doors in the means of egress from the areas required in 5.2.1.2.4 shall be 1055 mm (41.5 in.).

(B) In psychiatric hospitals and limited care facilities, the minimum clear width for doors in the means of egress from the areas required in 5.2.1.2.4 shall be 810 mm (32 in.).

Exception No. 1: Doors that are located so as not to be subject to use by any health care occupant shall be not less than 810 mm (32 in.) in clear width.

Exception No. 2: Doors in exit stair enclosures shall be not less than 810 mm (32 in.) in clear width.

Exception No. 3: Doors serving newborn nurseries shall be not less than 810 mm (32 in.) in clear width.

Exception No. 4: Where a pair of doors is provided, at least one of the doors shall provide not less than a 810-mm (32-in.) clear width opening and a rabbet, bevel, or astragal shall be provided at the meeting edge. The inactive leaf shall have an automatic flush bolt to provide positive latching.

5.2.1.3 Floor Level. The elevation of the floor surfaces on both sides of a door shall not vary by more than 13 mm (½ in.). The elevation shall be maintained on both sides of the doorway for a distance not less than the width of the widest leaf. Thresholds at doorways shall not exceed 13 mm (½ in.) in height. Raised thresholds and floor level changes in excess of 6.3 mm (¼ in.) at doorways shall be beveled with a slope not steeper than 1 in 2. *(See 7.2.4 for exemption to these requirements.)*

Exception No. 1: In one- and two-family dwellings where the door discharges to the outside or to an exterior balcony or exterior exit access, the floor level outside the door shall be permitted to be one step lower than the inside but shall not be in excess of 205 mm (8 in.) lower.

Exception No. 2: In one- and two-family dwellings, a door at the top of a stair shall be permitted to open directly at a stair, provided that the door does not swing over the stair and the door serves an area with an occupant load of fewer than 50 persons.

5.2.1.4 Swing and Force to Open.

5.2.1.4.1* Any door in a means of egress shall be of the side-hinged or pivoted-swinging type. The door shall be designed and installed so that it is capable of swinging from any position to the full required width of the opening in which it is installed.

Exception No. 1: In detention and correctional occupancies, doors in a means of egress shall be permitted to be of the horizontal sliding type if the force to slide the door to its fully open position does not exceed 222 N (50 lbf) with a perpendicular force against the door of 222 N (50 lbf).

Exception No. 2: Within dwelling units, doors shall be swinging or sliding.

Exception No. 3: Security grilles as specified in 5.2.1.4.2 shall be permitted.

Exception No. 4: In large residential board and care occupancies, doors within individual rooms and suites of rooms shall be permitted to be swinging or sliding.

Exception No. 5: Horizontal sliding doors that comply with 5.2.1.14 shall be permitted.

Exception No. 6: Doors to private garages and business industrial and storage areas with an occupant load of not more than 10, where such garages and business industrial and storage areas contain low- or ordinary-hazard contents, shall be permitted.

Exception No. 7: Revolving doors that comply with 5.2.1.10 shall be permitted.

5.2.1.4.2 Horizontal sliding or vertical rolling security grilles or doors that are part of the required means of egress shall be permitted for the occupancies shown in Table 5.2.1.4.2 under the following conditions:

(1) They remain secured in the full open position during the period of occupancy by the general public.
(2) On or adjacent to the door, there is a readily visible, durable sign in letters at least 25 mm (1 in.) high on a contrasting background that reads as follows: THIS DOOR TO REMAIN OPEN WHEN THE BUILDING IS OCCUPIED.
(3) Doors or grilles are not brought to the closed position when the space is occupied.
(4) Doors or grilles are operable from within the space without the use of any special knowledge or effort.
(5) Where two or more means of egress are required, not more than half of the means of egress is equipped with horizontal sliding or vertical rolling grilles or doors.

Table 5.2.1.4.2 Occupancies Permitting Sliding or Rolling Security Grilles or Doors

Occupancy	Conditions
Assembly	Main entrance/exits of assembly occupancies with occupant loads of 300 or fewer in covered mall buildings
Mercantile	From tenant spaces
Business	From tenant spaces

5.2.1.4.3 Doors that are required to be of the side-hinged or pivoted-swinging type shall swing in the direction of egress travel if serving a room or area with an occupant load of 50 or more.

5.2.1.4.4 Doors shall swing in the direction of egress travel if used in an exit enclosure or if serving a high-hazard contents area.

Exception: Doors from individual living units that open directly into an exit enclosure.

5.2.1.4.5* During its swing, any door in a means of egress shall leave unobstructed not less than one-half of the required width of an aisle, corridor, passageway, or landing and shall not project more than 180 mm (7 in.) into the required width of an aisle, corridor, passageway, or landing when fully open. Doors shall not open directly onto a stair without a landing. The landing shall have a width not less than the width of the door. *(See 5.2.1.3. See also 7.2.5 for exemptions to these requirements.)*

5.2.1.4.6 In educational occupancies, doors that swing into an exit access corridor shall be recessed to prevent interference with corridor traffic. *(See also 5.2.1.4.5.)*

5.2.1.4.7 The forces required to fully open any door manually in a means of egress shall not be more than 67 N (15 lbf) to release the latch, 133 N (30 lbf) to set the door in motion,

Copyright National Fire Protection Association
Provided by IHS under license with NFPA
No reproduction or networking permitted without license from IHS
Not for Resale

and 67 N (15 lbf) to open the door to the minimum required width. Opening forces for interior side-hinged or pivoted-swinging doors without closers shall not be more than 22 N (5 lbf). These forces shall be applied at the latch stile.

Exception No. 1: Horizontal sliding doors in detention and correctional occupancies as specified in Exception No. 1 to 5.2.1.4.1.

Exception No. 2: Power-operated doors as specified in 5.2.1.9.

5.2.1.5 Locks, Latches, and Alarm Devices.

5.2.1.5.1 Doors shall be arranged to be opened readily from the egress side whenever the building is occupied. Locks, if provided, shall not require the use of a key, a tool, or special knowledge or effort for operation from the egress side of the building.

Exception No. 1: On patient sleeping room doors, in health care occupancies, locking devices that restrict access to the room from the corridor and that are operable only by staff from the corridor side shall be permitted. Such devices shall not restrict egress from the room. Only one such locking device shall be permitted on each door.

Exception No. 2: Door-locking arrangements shall be permitted in health care occupancies or portions of health care occupancies where the clinical needs of the patients require specialized security measures for their safety if keys are carried by staff at all times. Only one such locking device shall be permitted on each door.

Exception No. 3: Key-operated locks as specified in 5.2.1.5.2 shall be permitted.

Exception No. 4: In lodging or rooming houses, doors serving a single dwelling unit only shall be permitted to be key operated if the key cannot be removed when the door is locked from the side from which egress is to be made.

Exception No. 5: In detention and correctional occupancies, doors shall be permitted to be locked in accordance with the applicable use condition. (See definitions of Use Conditions in Section 3.3; see also 5.2.1.6.3.)

5.2.1.5.2 Exterior doors for the occupancies shown in Table 5.2.1.5.2 shall be permitted to have key-operated locks from the egress side under the following conditions:

(1) On or adjacent to the door, there is a readily visible, durable sign in letters not less than 25 mm (1 in.) high on a contrasting background that reads as follows: THIS DOOR TO REMAIN OPEN WHEN THE BUILDING IS OCCUPIED.
(2) The locking device is of a type that is readily distinguishable as locked.
(3) A key is immediately available to any occupant inside the building when it is locked. This provision shall be permitted to be revoked by the authority having jurisdiction for cause.

5.2.1.5.3* Every stair enclosure door shall permit reentry from the stair enclosure to the interior of the building, or an automatic release shall be provided to unlock all stair enclosure doors to permit reentry. Such automatic release shall be actuated with the initiation of the building fire alarm system.

Exception No. 1: Doors on stair enclosures shall be permitted to be equipped with hardware that prevents reentry into the interior of the building, provided the following conditions are met:

(1) There are at least two levels where it is possible to leave the stair enclosure.
(2) There are not more than four stories intervening between stories where it is possible to leave the stair enclosure.
(3) Reentry is possible on the top or next to top story, permitting access to another exit.
(4) Doors permitting reentry are identified as such on the stair side of the door.
(5) Doors not permitting reentry are provided with a sign on the stair side indicating the location of the nearest door, in each direction of travel, permitting reentry or exit.

Exception No. 2: Stairs serving not more than four stories.

Exception No. 3: Stair enclosures serving a building permitted to have a single exit in accordance with the provisions of this chapter.

Exception No. 4: Non–high-rise health care occupancy buildings.

Exception No. 5: Detention and correctional occupancies.

5.2.1.5.4 If a stair enclosure allows access to the roof of the building, the door to the roof either shall be kept locked or shall allow reentry from the roof.

5.2.1.5.5* A latch or other fastening device on a door shall be provided with a releasing device that has an obvious method of operation and that is readily operated under all lighting conditions. The releasing mechanism for any latch shall be located not less than 865 mm (34 in.) and not more than 1220 mm (48 in.) above the finished floor. Doors shall be openable with not more than one releasing operation.

Exception: Egress doors from individual living units and guest rooms of residential occupancies shall be permitted to be provided with devices that require not more than one additional releasing operation if such device is operable from the inside without the use of a key or tool and is mounted at a height not exceeding 1220 mm (48 in.) above the finished floor. Automatic latching devices shall not be located more than 1220 mm (48 in.) above the finished floor.

5.2.1.5.6 Where pairs of doors are required in a means of egress, each leaf of the pair shall be provided with its own releasing device. Devices that depend on the release of one door before the other shall not be used.

Exception: Where exit doors are used in pairs and approved, automatic flush bolts are used, the door leaf having the automatic flush bolts shall have no doorknob or surface-mounted hardware. The unlatching of any leaf shall not require more than one operation.

5.2.1.5.7* Devices shall not be installed in connection with any door on which panic hardware or fire exit hardware is required if such device prevents or is intended to prevent the free use of the door for purposes of egress.

Exception: As otherwise provided in 5.2.1.6.

Table 5.2.1.5.2 Occupancies Permitting Key-Operated Locks

Occupancy	Condition
Assembly	Main entrance/exits consisting of single door or single pair of doors in assembly occupancies with occupant loads of 500 or fewer
Mercantile	Principal entrance/exit doors
Business	Principal entrance/exit doors

Copyright National Fire Protection Association
Provided by IHS under license with NFPA
No reproduction or networking permitted without license from IHS
Not for Resale

5.2.1.6 Special Locking Arrangements.

5.2.1.6.1 Delayed Egress Locks. In occupancies shown in Table 5.2.1.6.1, approved, listed, delayed egress locks shall be permitted to be installed on doors serving low- and ordinary-hazard contents in buildings protected throughout by an approved, supervised automatic fire detection system or an approved, supervised automatic sprinkler system, provided the criteria in (A) through (D) are met.

Table 5.2.1.6.1 Occupancies Permitting Delayed Egress Locks

Occupancy	Condition
Assembly	Doors other than main entrance/exit
Educational	—
Day care	—
Health care	Not more than one such device is located in any egress path
Ambulatory health care	Limited to exterior doors
Hotels and dormitories	Not more than one such device is located in any egress path
Apartment buildings	Not more than one such device is located in any egress path
Residential board and care, large	Not more than one such device is located in any egress path
Mercantile	—
Business	—
Industrial	—
Storage	—

(A) The doors shall unlock upon actuation of an approved, supervised automatic sprinkler system, or upon the actuation of any heat detector or activation of not more than two smoke detectors of an approved, supervised automatic fire detection system.

(B) The doors shall unlock upon loss of power controlling the lock or locking mechanism.

(C)* An irreversible process shall release the lock within 15 seconds upon activation of a force to the release device required in 5.2.1.5.5. The force to initiate the lock-releasing process shall not have to be applied continuously for more than 3 seconds. The force applied to initiate the lock-releasing process shall not have to exceed 67 N (15 lbf). The initiation of the release process shall activate an audible signal in the vicinity of the door. Once the door lock has been released by the application of force to the releasing device, relocking shall be by manual means only.

Exception: Where approved by the authority having jurisdiction, a delay of not more than 30 seconds shall be permitted.

(D)* On the door adjacent to the release device, there shall be a readily visible, durable sign in letters not less than 25 mm (1 in.) high and not less than 3.2 mm (⅛ in.) in stroke width on a contrasting background that reads as follows: PUSH UNTIL ALARM SOUNDS. DOOR CAN BE OPENED IN 15 SECONDS.

5.2.1.6.2 Access-Controlled Egress Doors. In occupancies shown in Table 5.2.1.6.2, doors in the means of egress shall be permitted to be equipped with an approved entrance and egress access control system, provided the following criteria are met:

(1) A sensor, arranged to detect an occupant approaching the doors, shall be provided on the egress side, and the doors shall be arranged to unlock in the direction of egress upon detection of an approaching occupant or loss of power to the sensor.
(2) Loss of power to that part of the access control system that locks the doors shall automatically unlock the doors in the direction of egress.
(3) The doors shall be arranged to unlock in the direction of egress from a manual release device located 1015 mm (40 in.) to 1220 mm (48 in.) vertically above the floor and within 1525 mm (60 in.) of the secured doors. The manual release device shall be readily accessible and clearly identified by a sign that reads as follows: PUSH TO EXIT. When operated, the manual release device shall result in direct interruption of power to the lock — independent of the access control system electronics — and the doors shall remain unlocked for at least 30 seconds.
(4) Activation of the building fire-protective signaling system, if provided, shall automatically unlock the doors in the direction of egress, and the doors shall remain unlocked until the fire-protective signaling system has been manually reset.
(5) Activation of the building automatic sprinkler or fire detection system, if provided, shall automatically unlock the doors in the direction of egress, and the doors shall remain unlocked until the fire-protective signaling system has been manually reset.

Table 5.2.1.6.2 Occupancies Permitting Access-Controlled Egress Doors

Occupancy	Condition
Assembly	Doors not locked from egress side when assembly occupancy is occupied
Educational	—
Day care	—
Health care	—
Ambulatory health care	Limited to exterior doors
Hotels and dormitories	—
Apartment buildings	—
Residential board and care, large	—
Mercantile	In buildings protected throughout by an approved, supervised fire detection system or an approved, automatic sprinkler system
Business	—
Industrial	—
Storage	—

5.2.1.6.3* Locking Provisions for Detention and Correctional Occupancies.

5.2.1.6.3.1 Doors from areas of refuge to the exterior shall be permitted to be locked with key locks in lieu of locking meth-

Copyright National Fire Protection Association
Provided by IHS under license with NFPA
No reproduction or networking permitted without license from IHS
Not for Resale

ods described in 5.2.1.6.3.2. The keys to unlock such doors shall be maintained and available at the facility at all times, and the locks shall be operable from the outside.

5.2.1.6.3.2* Any remote-controlled release used in a means of egress shall be provided with a reliable means of operation, remotely located from the resident living areas, to release locks on all doors. The remote location shall have sight and sound supervision of the resident living areas.

Exception: Provisions for remote-controlled locking and unlocking of occupied rooms in Use Condition IV shall not be required, provided that not more than 10 locks are necessary to be unlocked in order to move all occupants from one smoke compartment to an area of refuge as promptly as required to relocate occupants when remote-controlled unlocking is used. Unlocking of all necessary locks shall be accomplished with not more than two separate keys. (See 5.13.3 for requirements for smoke barrier doors.)

5.2.1.6.3.3 All remote-controlled release-operated doors shall be provided with a redundant means of operation as follows:

(1) Power-operated sliding doors or power-operated locks shall be constructed so that, in the event of a power failure, a manual mechanical means to release and open the doors is provided at each door, and either emergency power arranged in accordance with 5.9.2.2 is provided for the power operation or a remote-controlled manual mechanical release is provided.
(2) Mechanically operated sliding doors or mechanically operated locks shall be provided with a manual mechanical means at each door to release and open the door.

5.2.1.6.3.4 Doors unlocked by means of remote control under emergency conditions shall not automatically relock when closed unless specific action is taken at the remote-control location to enable doors to relock.

5.2.1.6.3.5 Emergency power shall be provided for all electrically operated sliding doors and locks. Power shall be arranged to automatically operate within 10 seconds of failure of normal power and to maintain the necessary power source for a minimum of 1½ hours.

Exception: This provision shall not be applicable for facilities with 10 or fewer locks that comply with the exception to 5.2.1.6.3.2.

5.2.1.7 Panic Hardware and Fire Exit Hardware.

5.2.1.7.1 In the occupancies shown in Table 5.2.1.7.1, doors shall be equipped with panic or fire exit hardware. Such a releasing device shall meet the following criteria:

(1) It shall consist of cross bars or push pads, the actuating portion of which extends across not less than one-half of the width of the door leaf and not less than 865 mm (34 in.) nor more than 1220 mm (48 in.) above the floor. *(See 7.2.6 for exemption to this requirement.)*
(2) It shall be constructed so that a horizontal force not exceeding 67 N (15 lbf) actuates the cross bar or push pad and latches.

5.2.1.7.2 Only approved panic hardware shall be used on doors that are not fire doors. Only approved fire exit hardware shall be used on fire doors.

5.2.1.7.3 Required panic hardware and fire exit hardware shall not be equipped with any locking device, set screw, or other arrangement that prevents the release of the latch when pressure is applied to the releasing device. Devices that hold the latch in the retracted position shall be prohibited on fire exit hardware.

Table 5.2.1.7.1 Occupancies Requiring Panic Hardware or Fire Exit Hardware

Occupancy	Condition
Assembly	Any latching or locking door in means of egress from area having an occupant load of 100 or more persons
Educational	Any latching or locking door in means of egress from area having an occupant load of 100 or more persons
Day care	Any latching or locking door in means of egress from area having an occupant load of 100 or more persons
Any occupancy	Any door serving high-hazard contents area with an occupant load of 5 or more persons

Exception No. 1: Doors that are permitted to be locked in detention and correctional occupancies shall be permitted to be equipped with devices that prevent the release of the latch.

Exception No. 2: Listed and approved devices that hold the latch in the retracted position shall be permitted on fire exit hardware.

5.2.1.8 Self-Closing Devices.

5.2.1.8.1* A door normally required to be kept closed shall not be secured in the open position at any time and shall be self-closing or automatic-closing in accordance with 5.2.1.8.2.

5.2.1.8.2 In any building of low- or ordinary-hazard contents, as defined in Section 4.2, or where approved by the authority having jurisdiction, doors shall be permitted to be automatic-closing, provided the following criteria are met:

(1) Upon release of the hold-open mechanism, the door becomes self-closing.
(2) The release device is designed so that the door instantly releases manually and upon release becomes self-closing, or the door readily closes.
(3) The automatic releasing mechanism or device is activated by the operation of approved smoke detectors installed in accordance with the requirements for smoke detectors for door release service in *NFPA 72, National Fire Alarm Code®*. *(See 7.2.7 for an exemption to this requirement.)*
(4) Upon loss of power to the hold-open device, the hold-open mechanism is released and the door becomes self-closing.
(5) The release by means of smoke detection of one door in a stair enclosure results in the closing of all doors serving that stair.
(6) In health care occupancies, the automatic sprinkler system, the fire alarm system, and the systems listed in (3) are arranged to initiate the closing action of all such doors throughout the smoke compartment or throughout the entire facility.
(7) In ambulatory health care facilities, the systems listed in (3) are arranged to initiate the closing action of all such doors by zone or throughout the entire facility.

5.2.1.9 Powered Doors.

5.2.1.9.1* General. Where means of egress doors are operated by power upon the approach of a person or where doors are

Copyright National Fire Protection Association
Provided by IHS under license with NFPA
No reproduction or networking permitted without license from IHS
Not for Resale

equipped with power-assisted manual operation, the design shall be such that, in the event of power failure, the door opens manually to allow egress travel or closes where necessary to safeguard the means of egress. The forces required to open these doors manually shall not exceed those required in 5.2.1.4.7, except that the force required to set the door in motion shall not be more than 222 N (50 lbf). The door shall be designed and installed so that, when a force is applied to the door on the side from which egress is made, it shall be capable of swinging from any position to the full use of required width of the opening in which it is installed. *(See 5.2.1.4.)* On the egress side of each door, there shall be a readily visible, durable sign that reads as follows: IN EMERGENCY, PUSH TO OPEN. The sign shall be in letters not less than 25 mm (1 in.) high on a contrasting background.

Exception No. 1: In an exit access that serves an occupant load of fewer than 50, sliding, power-operated doors that manually open in the direction of door travel with forces not exceeding those required in 5.2.1.4.7 shall not be required to have a swing-out feature. The required sign shall read as follows: IN EMERGENCY, PUSH TO OPEN.

Exception No. 2: In the emergency break-out mode, a door leaf located within a two-leaf opening shall be exempt from the minimum 810-mm (32-in.) single-leaf requirement of 5.2.1.2.3 if the clear width of the single leaf is at least 760 mm (30 in.).

Exception No. 3: For a biparting sliding door in the emergency break-out mode, a door leaf located within a multiple-leaf opening shall be exempt from the minimum 810-mm (32-in.) single-leaf requirement of 5.2.1.2.3 if a clear opening of not less than 810-mm (32-in.) is provided by all leafs broken out.

Exception No. 4: Doors complying with 5.2.1.14 shall be permitted to be used.

Exception No. 5: Power-operated doors as permitted in detention and correctional occupancies.

5.2.1.9.2 Doors Required to Be Self-Closing. Where doors are required to be self-closing and (1) are operated by power upon the approach of a person or (2) are provided with power-assisted manual operation, they shall be permitted in the means of egress under the following conditions:

(1) Doors can be opened manually in accordance with 5.2.1.9.1 to allow egress travel in the event of power failure.
(2) New doors remain in the closed position unless actuated or opened manually.
(3) When actuated, new doors remain open for not more than 30 seconds.
(4) Doors are held open for any period of time close — and the power-assist mechanism ceases to function — upon operation of approved smoke detectors installed in such a way as to detect smoke on either side of the door opening in accordance with the provisions of *NFPA 72, National Fire Alarm Code.*
(5) Doors required to be self-latching are either self-latching or become self-latching upon operation of approved smoke detectors per 5.2.1.9.2(4).
(6) New power-assisted swinging doors comply with BHMA/ANSI A156.19, *American National Standard for Power Assist and Low Energy Power Operated Doors.*

5.2.1.10 Revolving Doors.

5.2.1.10.1 Revolving doors shall comply with (A) through (E).

(A) Revolving doors shall be capable of being collapsed into a book-fold position.

(B) When in the book-fold position, the parallel egress paths formed shall provide an aggregate width of 915 mm (36 in.).

(C) Revolving doors shall not be used within 3050 mm (120 in.) of the foot or top of stairs or escalators. Under all conditions, there shall be a dispersal area acceptable to the authority having jurisdiction between the stairs or escalators and the revolving door.

(D) The revolutions per minute (rpm) of revolving doors shall not exceed those shown in Table 5.2.1.10.1.

Table 5.2.1.10.1 Speed Limitations of Revolving Door Revolution

Inside Diameter		Power Driven–Type Speed Control	Manual-Type Speed Control
mm	in.	(rpm)	(rpm)
1980	78	11	12
2135	84	10	11
2285	90	9	11
2440	96	9	10
2590	102	8	9
2745	108	8	9
2895	114	7	8
3050	120	7	8

(E) Each revolving door shall have a conforming side-hinged swinging door in the same wall as the revolving door and within 3050 mm (120 in.) of the revolving door.

Exception: Revolving doors shall be permitted without adjacent swinging doors for street floor elevator lobbies if no stairways or doors from other parts of the building discharge through the lobby and if the lobby has no occupancy other than as a means of travel between elevators and street.

5.2.1.10.2 In assembly, hotel and dormitory, apartment building, large residential board and care, mercantile, and business occupancies, revolving doors shall be permitted as a component in a means of egress under the following conditions:

(1) Revolving doors are not given credit for more than 50 percent of the required egress capacity.
(2) Each revolving door is credited with not more than a 50-person capacity.
(3) Revolving doors with not less than 2745-mm (108-in.) in diameter is credited with an egress capacity based on the clear opening width created when the door is collapsed into a book-fold position.
(4) Revolving doors are capable of being collapsed into a book-fold position when a force of not more than 580 N (130 lbf) is applied to wings within 75 mm (3 in.) of the outer edge.

5.2.1.10.3 Revolving doors that are not used as a component of a means of egress shall have a collapsing force of not more than 800 N (180 lbf).

Exception: Revolving doors, provided that the collapsing force is reduced to not more than 580 N (130 lbf) under the following conditions:

(1) Power to the device holding the wings in position fails or is removed.

Copyright National Fire Protection Association
Provided by IHS under license with NFPA
No reproduction or networking permitted without license from IHS
Not for Resale

(2) There is actuation of the automatic sprinkler system where such a system is provided.
(3) There is actuation of a smoke detection system that is installed to provide coverage in all areas within the building that are within 23 m (75 ft) of the revolving doors.
(4) There is actuation of a clearly identified manual control switch in an approved location that reduces the holding force to not more than 580 N (130 lbf).

5.2.1.11 Turnstiles.

5.2.1.11.1 Turnstiles or similar devices that restrict travel to one direction or are used to collect fares or admission charges shall not be placed so as to obstruct any required means of egress.

Exception No. 1: Approved turnstiles not exceeding 990 mm (39 in.) high that turn freely in the direction of egress travel shall be permitted where revolving doors are permitted in 5.2.1.10.2.

Exception No. 2: Where turnstiles are approved by the authority having jurisdiction, each turnstile shall be credited for a capacity of 50 persons, provided such turnstiles meet the following criteria:

(1) Each turnstile freewheels in the egress direction when primary power is lost and freewheels in the direction of egress travel upon the manual release by an employee assigned in the area
(2) Each turnstile is not given credit for more than 50 percent of the required egress width
(3) Each turnstile is not more than 990 mm (39 in.) high and has a clear width of at least 420 mm (16½ in.)

5.2.1.11.2 Turnstiles exceeding 990 mm (39 in.) high shall meet the requirements for revolving doors.

5.2.1.11.3 Turnstiles in or furnishing access to required exits shall provide not less than 420 mm (16½ in.) clear width at and below a height of 990 mm (39 in.) and not less than 560 mm (22 in.) clear width at heights above 990 mm (39 in.).

5.2.1.12 Doors in Folding Partitions. Where permanently mounted folding or movable partitions divide a room into smaller spaces, a swinging door or open doorway shall be provided as an exit access from each such space.

Exception No. 1: A door or opening in the folding partition shall not be required under the following conditions:

(1) The subdivided space is not used by more than 20 persons at any time.
(2) The use of the space is under adult supervision.
(3) The partitions are arranged so that they do not extend across any aisle or corridor used as an exit access to the required exits from the story.
(4) The partitions conform to the interior finish and other requirements of this Code.
(5) The partitions are of an approved type, have a simple method of release, and are capable of being opened quickly and easily by experienced persons in case of emergency.

Exception No. 2: Where a subdivided space is provided with at least two means of egress, the swinging door in the folding partition shall not be required, and one such means of egress shall be permitted to be equipped with a horizontal sliding door that complies with 5.2.1.14.

5.2.1.13 Balanced Doors. If panic hardware is installed on balanced doors, the panic hardware shall be of the push-pad type, and the pad shall not extend more than approximately one-half the width of the door measured from the latch side. *[See 5.2.1.7.1(1).]*

5.2.1.14 Horizontal Sliding Doors.

5.2.1.14.1 Horizontal sliding doors shall be permitted in means of egress under the following conditions:

(1) The door is readily operable from either side without special knowledge or effort.
(2) The force, applied to the operating device in the direction of egress, required to operate the door is not more than 67 N (15 lbf).
(3) The force required to operate the door in the direction of door travel is not more than 133 N (30 lbf) to set the door in motion and not more than 67 N (15 lbf) to close the door or open it to the minimum required width.
(4) The door is operable with a force not more than 222 N (50 lbf) when a force of 1110 N (250 lbf) is applied perpendicularly to the door adjacent to the operating device.
(5) The door assembly complies with the fire protection rating and, where rated, is self-closing or automatic-closing by smoke detection in accordance with 5.2.1.8.
(6) In apartment buildings, hotels, and dormitories, horizontal sliding doors shall not be used across corridors.

5.2.1.14.2 In health care occupancies, horizontal sliding doors, as permitted by 5.2.1.14.1, that are not automatic-closing shall be limited to a single leaf and shall have a latch or other mechanism that ensures that doors will not rebound into a partially open position when closed.

5.2.2 Stairs.

5.2.2.1 General. Stairs shall be permitted in the means of egress. Stairs used in the means of egress shall conform to the general requirements of Section 5.1 and to the special requirements of 5.2.2.

Exception: Aisle steps in assembly occupancies as specified in 5.15.4.

5.2.2.2 Dimensional Criteria.

5.2.2.2.1 Standard Stairs. Stairs shall be in accordance with Table 5.2.2.2.1. *(See 7.2.8 for exemption to this requirement.)*

Table 5.2.2.2.1 Stair Criteria

Element	Dimension
Minimum width clear of all obstructions, except projections not exceeding 90 mm (3½ in.) at or below handrail height on each side	1120 mm (44 in.); 915 mm (36 in.) where total occupant load of all stories served by stairways is fewer than 50
Maximum height of risers	180 mm (7 in.)
Minimum height of risers	100 mm (4 in.)
Minimum tread depth	280 mm (11 in.)
Minimum headroom	2030 mm (80 in.)
Maximum height between landings	3660 mm (144 in.)
Landing	*(See 5.2.1.3 and 5.2.2.3.2.)*

Exception No. 1: Industrial equipment access stairs and landings that serve as a component of the means of egress from the involved equipment and do not serve more than 20 people shall be permitted to have a clear width not less than 560 mm (22 in.), a tread depth not less than 255 mm (10 in.), a riser height not exceeding 230 mm

--`,,,-`-`,,`,,`,`,,`---
Copyright National Fire Protection Association
Provided by IHS under license with NFPA
No reproduction or networking permitted without license from IHS
Not for Resale

(9 in.), a headroom not less than 2030 mm (80 in.), and a height between landings not exceeding 3660 mm (144 in.).

Exception No. 2: In assembly occupancies, the limitation on height between landings in Table 5.2.2.2.1 shall not apply to aisle stairs.

5.2.2.2.2 Curved Stairs. Curved stairs shall be permitted as a component in a means of egress where the minimum depth of tread is 280 mm (11 in.) at a point 305 mm (12 in.) from the narrower end of the tread, and the smallest radius is at least twice the stair width.

5.2.2.2.3 Spiral Stairs. *(See 7.2.9 for exemptions to these requirements.)*

5.2.2.2.3.1 In the occupancies shown in Table 5.2.2.2.3.1, spiral stairs shall be permitted as a component in a means of egress in accordance with 5.2.2.2.3.2 and 5.2.2.2.3.3.

Table 5.2.2.2.3.1 Occupancies Permitting Spiral Stairs

Occupancy	Condition
Assembly	From lighting and access catwalks, galleries, and gridirons
Detention and correctional	For access to and between staff locations
Apartment buildings	Within a single dwelling unit
Dwellings	Within a single dwelling unit
Mercantile	—
Business	—
Industrial	—
Storage	—

5.2.2.2.3.2 Spiral stairs shall be permitted, provided the following criteria are met:

(1) Riser heights shall not exceed 180 mm (7 in.).
(2) The stairway shall have a tread depth of not less than 280 mm (11 in.) for a portion of the stairway width sufficient to provide egress capacity for the occupant load served in accordance with 5.3.3.1.
(3) At the outer side of the stairway, an additional 265 mm (10½ in.) of width shall be provided clear to the other handrail, and this width shall not be included as part of the required egress capacity.
(4) Handrails complying with 5.2.2.4 shall be provided on both sides of the spiral stairway.
(5) The inner handrail shall be located within 610 mm (24 in.), measured horizontally, of the point where a tread depth not less than 280 mm (11 in.) is provided.
(6) The turn of the stairway shall be such that descending users have the outer handrail at their right side.

5.2.2.2.3.3 Where the occupant load served does not exceed three, spiral stairs shall be permitted, provided that the following criteria are met:

(1) The clear width of the stairs shall be not less than 66 cm (26 in.).
(2) The height of risers shall not exceed 240 mm (9½ in.).
(3) The headroom shall be not less than 1980 mm (78 in.).
(4) Treads shall have a depth not less than 190 mm (7½ in.) at a point 305 mm (12 in.) from the narrower edge.
(5) All treads shall be identical.
(6) Handrails shall be provided on both sides of the stairway.

5.2.2.2.4* Winders. In the occupancies shown in Table 5.2.2.2.4, winders shall be permitted in stairs. Winders shall have a tread depth not less than 150 mm (6 in.) and a depth of tread not less than 280 mm (11 in.) at a point 305 mm (12 in.) from the narrowest edge.

Table 5.2.2.2.4 Occupancies Permitting Winders

Occupancy	Condition
Apartment buildings	Within a single dwelling unit
Lodging or rooming houses	—
Dwellings	Within a single dwelling unit
Residential board and care, small	—

5.2.2.3 Stair Details.

5.2.2.3.1 Construction. All stairs serving as required means of egress shall be of permanent, fixed construction.

Exception: In assembly occupancies, stairs that serve seating that is designed to be repositioned.

5.2.2.3.2 Landings. Stairs shall have landings at door openings. Every landing shall have a dimension measured in the direction of travel that is at least equal to the width of the stair. *(See 5.2.1.3.)* Stairs and intermediate landings shall continue with no decrease in width along the direction of egress travel.

Exception No. 1: Landings shall be permitted to be not more than 1220 mm (48 in.) in the direction of travel, provided the stair has a straight run.

Exception No. 2: In one- and two-family dwellings, a door at the top of a stair shall be permitted to open directly at a stair, provided the door does not swing over the stair and the door serves an area with an occupant load of fewer than 50 persons.

5.2.2.3.3* Tread and Landing Surfaces. Stair treads and landings shall be solid, without perforations, and free of projections or lips that could trip stair users. If not vertical, risers shall be permitted to slope under the tread at an angle of not more than 30 degrees from vertical; however, the permitted projection of the nosing shall not exceed 38 mm (1½ in.).

Exception: Grated stair treads and landing floors shall be permitted in the following:

(1) Detentional and correctional occupancies
(2) Industrial occupancies
(3) Assembly occupancies in means of egress from lighting and access catwalks, galleries, and gridirons

5.2.2.3.4* Tread Slope. Tread slope shall not exceed a slope of 1 in 48.

5.2.2.3.5* Riser Height and Tread Depth. Riser height shall be measured as the vertical distance between tread nosings. Tread depth shall be measured horizontally between the vertical planes of the foremost projection of adjacent treads and at a right angle to the tread's leading edge, but tread depth shall not include beveled or rounded tread surfaces that slope more than 20 degrees (a slope of 1 in 2.75). At tread nosings, such beveling or rounding shall not exceed 13 mm (½ in.) in horizontal dimension.

--`,,,-`-`,,`,,`,`,,`---
Copyright National Fire Protection Association
Provided by IHS under license with NFPA
No reproduction or networking permitted without license from IHS
Not for Resale

5.2.2.3.6 Dimensional Uniformity. There shall be no variation exceeding 4.8 mm (3⁄16 in.) in the depth of adjacent treads or in the height of adjacent risers, and the tolerance between the largest and smallest riser or between the largest and smallest tread shall not exceed 9.5 mm (3⁄8 in.) in any flight.

Exception: Where the bottom riser adjoins a sloping public way, walk, or driveway having an established grade and serving as a landing, a variation in height of the bottom riser not exceeding 75 mm (3 in.) in every 915 mm (36 in.) of stairway width shall be permitted.

5.2.2.4 Guards and Handrails.

5.2.2.4.1* Guards. Means of egress that are more than 760 mm (30 in.) above the floor or grade below shall be provided with guards to prevent falls over the open side. *(See also 5.2.2.4.6.)*

5.2.2.4.2* Handrails. Stairs and ramps shall have handrails on both sides. In addition, handrails shall be provided within 760 mm (30 in.) of all portions of the required egress width of stairs. The required egress width shall be along the natural path of travel. *(See also 5.2.2.4.5.) (See 7.2.10 for exemption to this requirement.)*

Exception No. 1: If part of a curb separates a sidewalk from a vehicular way, a single step or a ramp shall not be required to have a handrail.

Exception No. 2: Stairs within dwelling units and guest rooms, and ramps within dwelling units and guest rooms, shall have a handrail on at least one side.

5.2.2.4.3 Continuity. Required guards and handrails shall continue for the full length of each flight of stairs. At turns of stairs, inside handrails shall be continuous between flights at landings. *(See 7.2.11 for exemption to this requirement.)*

5.2.2.4.4 Projections. The design of guards and handrails and the hardware for attaching handrails to guards, balusters, or walls shall be such that there are no projections that might engage loose clothing. Openings in guards shall be designed to prevent loose clothing from becoming wedged in such openings.

5.2.2.4.5* Handrail Details.

5.2.2.4.5.1* Handrails on stairs or ramps shall have a consistent height of at least 865 mm (34 in.) and not more than 965 mm (38 in.) above the surface of the stair tread or ramp walking surface, measured vertically to the top of the rail from the leading edge of the tread or the ramp walking surface. *(See 7.2.11.1 for exemption to this requirement.)*

Exception No. 1: The height of required handrails that form part of a guard shall be permitted to be not more than 1065 mm (42 in.), measured vertically to the top of the rail from the leading edge of the tread.

Exception No. 2: Additional handrails that are lower or higher than the main handrail shall be permitted.

5.2.2.4.5.2* Handrails shall provide a clearance of not less than 38 mm (1½ in.) between the handrail and the wall to which it is fastened. *(See 7.2.11.2 for exemption to this requirement.)*

5.2.2.4.5.3* Handrails shall have a circular cross section with an outside diameter of not less than 32 mm (1¼ in.) and not more than 51 mm (2 in.). *(See 7.2.11.3 for exemption to this requirement.)*

Exception: Any other shape with a perimeter dimension of not less than 100 mm (4 in.), but not more than 160 mm (6¼ in.), and with the largest cross-sectional dimension not more than 57 mm (2¼ in.) shall be permitted, provided that edges are rounded so as to provide a minimum radius of 3.2 mm (⅛ in.).

5.2.2.4.5.4 Handrails shall be continuously graspable along the entire length.

Exception: Handrail brackets or balusters attached to the bottom surface of the handrail shall not be considered to be obstructions to graspability, provided the following criteria are met:

(1) They do not project horizontally beyond the sides of the handrail within 38 mm (1½ in.) of the bottom of the handrail and provided that, for each 13 mm (½ in.) of additional handrail perimeter dimension above 100 mm (4 in.), the vertical clearance dimension of 38 mm (1½ in.) can be reduced by 3 mm (⅛ in.).
(2) They have edges with a radius of not less than 0.25 mm (0.01 in.).
(3) They obstruct not in excess of 20 percent of the handrail length if the graspable perimeter dimension is less than 140 mm (5½ in.).

5.2.2.4.5.5 Handrail ends shall be returned to the wall or floor or shall terminate at newel posts. *(See 7.2.11.4 for exemption to this requirement.)*

5.2.2.4.5.6 Handrails that are not continuous between flights shall extend horizontally, at the required height, not less than 305 mm (12 in.) beyond the top riser and continue to slope for a depth of one tread beyond the bottom riser. *(See 7.2.11.5 for exemption to this requirement.)*

Exception: Within dwelling units, the handrail shall be permitted to extend, at the required height, to points directly above the top and bottom risers.

5.2.2.4.6 Guard Details.

5.2.2.4.6.1 The height of guards required in 5.2.2.4.1 shall be measured vertically to the top of the guard from the surface adjacent thereto.

5.2.2.4.6.2 Guards shall be not less than 1065 mm (42 in.) high. *(See 7.2.11.6 for exemption to this requirement.)*

Exception: As specified in the assembly seating provisions of Section 5.15.

5.2.2.4.6.3* Open guards shall have intermediate rails or an ornamental pattern such that a sphere 100 mm (4 in.) in diameter shall not pass through any opening up to a height of 865 mm (34 in.). *(See 7.2.11.7 for exemption to this requirement.)*

Exception No. 1: The triangular openings formed by the riser, tread, and bottom element of a guardrail at the open side of a stair shall be of such size that a sphere 150 mm (6 in.) in diameter shall not pass through the triangular opening.

Exception No. 2: In detention and correctional occupancies, in industrial occupancies, and in storage occupancies, the clear distance between intermediate rails measured at right angles to the rails shall not exceed 535 mm (21 in.).

5.2.2.5 Enclosure and Protection of Stairs.

5.2.2.5.1 Enclosures. All inside stairs serving as an exit or exit component shall be enclosed in accordance with 5.1.1.2.

5.2.2.5.2* Exposures. Where nonrated walls or unprotected openings enclose the exterior of a stairway and the walls or openings are exposed by other parts of the building at an angle of not more than 180 degrees, the building enclosure

Copyright National Fire Protection Association
Provided by IHS under license with NFPA
No reproduction or networking permitted without license from IHS
Not for Resale

walls within 3050 mm (120 in.) horizontally of the nonrated wall or unprotected opening shall be constructed as required for stairway enclosures, including opening protectives. Construction shall extend vertically from the ground to a point 3050 mm (120 in.) above the topmost landing of the stairs or to the roofline, whichever is lower. *(See 7.2.12 for exemption to these requirements.)*

Exception: The fire resistance rating of the separation extending 3050 mm (120 in.) from the stairs shall not be required to be more than 1 hour with openings having a ¾-hour fire resistance rating.

5.2.2.5.3* Usable Space. There shall be no enclosed, usable space within an exit enclosure, including under stairs, nor shall any open space within the enclosure be used for any purpose that has the potential to interfere with egress.

Exception: Enclosed usable space shall be permitted under stairs if the space is separated from the stair enclosure by the same fire resistance as the exit enclosure. Entrance to such enclosed usable space shall not be from within the stair enclosure. (See also 5.1.1.2.3.)

5.2.2.5.4* Stair Identification Signs. Stairs serving five or more stories shall be provided with signage within the enclosure at each floor landing. The signage shall indicate the story, the terminus of the top and bottom of the stair enclosure, and the identification of the stair. The signage also shall state the story of, and the direction to, exit discharge. The signage shall be inside the enclosure and shall be located approximately 1525 mm (60 in.) above the floor landing in a position that is readily visible when the door is in the open or closed position.

5.2.2.5.5 Egress Direction Signs. Where an enclosed stair requires travel in an upward direction to reach the level of exit discharge, signs with directional indicators that indicate the direction to the level of exit discharge shall be provided at each floor level landing from which upward direction of travel is required. Such signage shall be readily visible when the door is in the open or closed position.

Exception No. 1: Where signs required by 5.2.2.5.4 are provided.

Exception No. 2: Stairs that extend not more than one story below the level of exit discharge where the exit discharge is clearly obvious.

5.2.2.6 Special Provisions for Outside Stairs.

5.2.2.6.1 Access. If approved by the authority having jurisdiction, outside stairs shall be permitted where leading to roofs of other sections of the building or an adjoining building, where the construction is fire resistive and where there is a continuous means of egress from the roof. *(See also 5.7.6.)*

5.2.2.6.2 Visual Protection. Outside stairs shall be arranged to avoid any impediments to the use of the stairs by persons having a fear of high places. For stairs more than three stories in height, any arrangement intended to meet this requirement shall be no less than 1220 mm (48 in.) in height.

5.2.2.6.3 Separation and Protection of Outside Stairs. Outside stairs shall be separated from the interior of the building by walls with the fire resistance rating required for enclosed stairs with fixed or self-closing opening protectives. This construction shall extend vertically from the ground to a point 3050 mm (120 in.) above the topmost landing of the stairs or to the roofline, whichever is lower, and no less than 3050 mm (120 in.) horizontally.

Exception No. 1: Outside stairs serving an exterior exit access balcony that has two remote outside stairways or ramps shall be permitted to be unprotected.

Exception No. 2: Outside stairs serving not more than two adjacent stories, including the story of exit discharge, shall be permitted to be unprotected where there is a remotely located second exit.

Exception No. 3: The fire resistance rating of the separation extending 3050 mm (120 in.) from the stairs shall not be required to be more than 1 hour with openings having a ¾-hour fire protection rating.

5.2.2.6.4 Protection of Openings. All openings below an outside stair shall be protected with an assembly having a ¾-hour fire protection rating under one of the following conditions:

(1) Where located in a court, the smallest dimension of which is not more than one-third its height
(2) Where located in an alcove having a width not exceeding one-third its height and a depth exceeding one-fourth its height

5.2.2.6.5* Water Accumulation. Outside stairs and landings shall be designed to minimize water accumulation on their surfaces.

5.2.2.6.6 Openness. Outside stairs shall be at least 50 percent open on one side and shall be arranged to restrict the accumulation of smoke.

5.2.3 Smokeproof Enclosures.

5.2.3.1 General. Smokeproof enclosures shall be permitted to be used in the means of egress. Where smokeproof enclosures are used in the means of egress, they shall conform to the general requirements of Section 5.1, the special requirements of 5.2.3, and the building code. *(See 7.2.13 for exemption to this requirement.)*

5.2.3.2 Enclosure. A smokeproof enclosure shall be enclosed from the highest point to the lowest point by barriers that have 2-hour fire resistance ratings. Where a vestibule is used, it shall be within the 2-hour rated enclosure and shall be considered part of the smokeproof enclosure.

5.2.3.3 Vestibule. Where a vestibule is provided, the doorway into the vestibule shall be protected with an approved fire door assembly that has a 1½-hour fire protection rating, and the fire door assembly from the vestibule to the smokeproof enclosure shall have at least a 20-minute fire protection rating. Doors shall be designed to minimize air leakage and shall be self-closing or shall be automatic-closing by actuation of a smoke detector within 3050 mm (120 in.) of the vestibule door.

5.2.3.4 Discharge. Every smokeproof enclosure shall discharge into a public way, into a yard or court having direct access to a public way, or into an exit passageway. Such exit passageways shall be without openings other than the entrance from the smokeproof enclosure and the door to the outside yard, court, or public way. The exit passageway shall be separated from the remainder of the building by a 2-hour fire resistance rating.

5.2.4 Horizontal Exits.

5.2.4.1* General. Horizontal exits shall be permitted to be used in the means of egress. Where horizontal exits are used in the means of egress, they shall conform to the general requirements of Section 5.1 and the special requirements of 5.2.4. Horizontal exits shall be permitted to be substituted for other exits to the extent that the total egress capacity of the other exits (stairs, ramps, doors leading outside the building) shall be at least half that required for the entire area of the

Copyright National Fire Protection Association
Provided by IHS under license with NFPA
No reproduction or networking permitted without license from IHS
Not for Resale

building or connected buildings, provided no horizontal exits exist.

Exception No. 1: In health care occupancies, the total egress capacity of the other exits shall be permitted to be reduced to one-third that required for the entire area of the building.

Exception No. 2: In detention and correctional occupancies, horizontal exits shall be permitted to comprise 100 percent of the exits required, provided that an exit, other than a horizontal exit, is accessible in some other (not necessarily adjacent) fire compartment without requiring return through the compartment of fire origin.

5.2.4.2 Health Care Occupancy Horizontal Exits.

5.2.4.2.1 Health care occupancy horizontal exits shall comply with the requirements of 5.2.4.1 and 5.2.4.3 through 5.2.4.5 except as modified by 5.2.4.2.

5.2.4.2.2 A single door shall be permitted in a horizontal exit if the exit serves one direction only. Such door shall be a swinging door or a horizontal sliding door that complies with 5.2.1.14. The door shall be not less than 1055 mm (41.5 in.) in clear width.

5.2.4.2.3 A horizontal exit involving a corridor not less than 2440 mm (96 in.) in width that serves as a means of egress from both sides of the doorway shall have the opening protected by a pair of swinging doors arranged to swing in opposite directions from each other, with each door having a clear width not less than 1055 mm (41.5 in.), or by a horizontal sliding door that complies with 5.2.1.14 and provides a clear width not less than 2110 mm (83 in.).

5.2.4.2.4 A horizontal exit involving a corridor not less than 1830 mm (72 in.) in width that serves as a means of egress from both sides of the doorway shall have the opening protected by a pair of swinging doors arranged to swing in opposite directions from each other, with each door having a clear width not less than 810 mm (32 in.), or a horizontal sliding door that complies with 5.2.1.14 and provides a clear width not less than 1625 mm (64 in.).

5.2.4.2.5 An approved vision panel shall be required in each horizontal exit. Center mullions shall be prohibited.

5.2.4.3 Fire Compartments.

5.2.4.3.1 Every fire compartment for which credit is allowed in connection with a horizontal exit shall have, in addition to the horizontal exit or exits, at least one exit, but not less than 50 percent of the required number and capacity of exits, that is not a horizontal exit. Any fire compartment not having an exit leading outside shall be considered as part of an adjoining compartment with an exit leading to the outside.

Exception: As provided for health care occupancies and detention and correctional occupancies in Exception No. 1 and No. 2 to 5.2.4.1.

5.2.4.3.2 Every horizontal exit for which credit is given shall be arranged so that there are continuously available paths of travel leading from each side of the exit to stairways or other means of egress leading to outside the building.

5.2.4.3.3 Wherever either side of the horizontal exit is occupied, the doors used in connection with the horizontal exit shall be unlocked from the egress side.

Exception: As provided for health care occupancies and detention and correctional occupancies in 5.2.1.5.

5.2.4.3.4 The floor area on either side of a horizontal exit shall be sufficient to hold the occupants of both floor areas, providing a clear floor area per person not less than that shown in Table 5.2.4.3.4.

Table 5.2.4.3.4 Minimum Floor Area on Each Side of Horizontal Exit

	Clear Floor Area	
Occupancy/Use	**net m^2**	**net ft^2**
Health care — hospital, nursing home	2.8/patient	30/patient
Health care — limited care facility	1.4/patient	15/patient
Health care — stories not housing bed or litter patients	0.56/occupant	6/occupant
Detention and correctional	0.56/occupant	6/occupant
All others	0.28/occupant	3/occupant

5.2.4.4 Fire Barriers.

5.2.4.4.1 Fire barriers separating building areas between which there are horizontal exits shall have a 2-hour fire resistance rating with 1½-hour fire protection–rated opening protectives and shall provide a separation continuous to ground.

Exception: Where a fire barrier provides a horizontal exit in any story of a building, such fire barrier shall not be required on other stories under the following conditions:

(1) The stories on which the fire barrier is omitted are separated from the story with the horizontal exit by construction having a fire resistance rating not less than that of the horizontal exit fire barrier.
(2) Vertical openings between the story with the horizontal exit and the open fire area story are enclosed with construction having a fire resistance rating not less than that of the horizontal exit fire barrier.
(3) All required exits, other than horizontal exits, discharge directly to the outside.

5.2.4.4.2 Where fire barriers that serve horizontal exits terminate at outside walls and the outside walls, for a distance of 3050 mm (120 in.) on each side of the horizontal exit, are at an angle of not more than 180 degrees, the outside walls shall have a 1-hour fire resistance rating with ¾-hour fire protection–rated opening protectives for a distance of 3050 mm (120 in.) on each side of the horizontal exit. *(See 7.2.14 for exemption to this requirement.)*

5.2.4.4.3 Fire barriers forming horizontal exits shall not be penetrated by ducts. *(See 7.2.15 for exemption to this requirement.)*

Exception No. 1: In buildings protected throughout by an approved, supervised automatic sprinkler system.

Exception No. 2: In detention and correctional occupancies, duct penetrations that are protected by combination fire dampers/smoke leakage–rated dampers.

5.2.4.4.4 Any opening in such fire barriers shall be protected.

5.2.4.4.5 Doors in horizontal exits shall comply with 5.2.1.4.

Copyright National Fire Protection Association
Provided by IHS under license with NFPA
No reproduction or networking permitted without license from IHS
Not for Resale

Exception: In horizontal exits in industrial and storage occupancies, where the doorway is protected by a fire door on each side of the wall in which it is located and one fire door is of the swinging type, the other door shall be permitted to be an automatic sliding fire door that shall be kept open whenever the building is occupied.

5.2.4.4.6 Swinging fire doors shall be permitted in horizontal exits, provided the following conditions are met *(See 7.2.16 for exemption to these requirements)*:

(1) The doors swing in the direction of egress travel.
(2) Where a horizontal exit serves areas on both sides of a fire barrier, there are adjacent openings with swinging doors, opening in opposite directions, with signs on each side of the fire barrier indicating the door that swings with the travel from that side. Sleeping room areas in detention and correctional occupancies shall be exempt from the sign requirement.
(3) The doors are of any other approved arrangement, provided that they always swing in the direction of any possible egress travel.

5.2.4.4.7* Doors in horizontal exits shall be designed and installed so as to minimize air leakage.

5.2.4.4.8* All fire doors in horizontal exits shall be self-closing or automatic-closing in accordance with 5.2.1.8. Horizontal exit doors located across a corridor shall be automatic-closing in accordance with 5.2.1.8. *(See 7.2.17 for exemption to this requirement.)*

5.2.4.5 Bridges and Balconies.

5.2.4.5.1 Each bridge or balcony utilized in conjunction with horizontal exits shall have guards and handrails that comply with the requirements of 5.2.2.4.

5.2.4.5.2 Every bridge or balcony shall be at least as wide as the door leading to it and at least 1120 mm (44 in.) wide. *(See 7.2.18 for exemption to this requirement.)*

5.2.4.5.3 Where a bridge or balcony serves as a horizontal exit in one direction, the door shall be required to swing only in the direction of egress travel.

5.2.4.5.4 Where a bridge or balcony serves as a horizontal exit in both directions, doors shall be provided in pairs, swinging in opposite directions. Only the door swinging in the direction of egress travel shall be counted in the determination of egress capacity. *(See 7.2.19 for exemption to these requirements.)*

5.2.4.5.5 In climates subject to the accumulation of snow and ice, the bridge or balcony shall be protected to prevent the accumulation of snow and ice on the floor.

5.2.4.5.6 All wall openings, in both of the connected buildings or fire areas, any part of which is within 3050 mm (120 in.) of any bridge or balcony as measured horizontally or from below, shall be protected with fire doors or fixed fire window assemblies that have a ¾-hour fire protection rating. *(See 7.2.20 for exemption to this requirement.)*

5.2.5 Ramps.

5.2.5.1 General. Ramps shall be permitted to be used in the means of egress. Where ramps are used in the means of egress, they shall conform to the general requirements of Section 5.1 and to the special requirements of 5.2.5.

5.2.5.2* Dimensional Criteria. Ramps shall be in accordance with Table 5.2.5.2. *(See 7.2.21 for exemption to this requirement.)*

Table 5.2.5.2 Ramps

Element	Dimension
Minimum width clear of all obstructions, except projections not more than 90 mm (3½ in.) at or below handrail height on each side	1120 mm (44 in.)
Maximum slope	1 in 12
Maximum cross slope	1 in 48
Maximum rise for a single ramp run	760 mm (30 in.)

Exception No. 1: Where not part of an accessible means of egress, ramps shall be permitted to have a slope not steeper than 1 in 8.

Exception No. 2: Industrial equipment access ramps and landings that serve as a component of the means of egress from the involved equipment and do not serve more than 20 people shall be permitted to have a minimum clear width of 560 mm (22 in.) and a maximum height between landings of 3660 mm (144 in.).

Exception No. 3: Ramps that provide access to vehicles, vessels, mobile structures, and aircraft shall not be required to comply with the maximum slope or maximum rise for a single ramp run.

5.2.5.3 Ramp Details.

5.2.5.3.1 Construction.

5.2.5.3.1.1 All ramps that serve as required means of egress shall be of permanent fixed construction.

5.2.5.3.1.2 The ramp floor and landings shall be solid and without perforations.

5.2.5.3.2 Landings. *(See 7.2.22 for exemption to these requirements.)*

5.2.5.3.2.1 Ramps shall have landings at the top, at the bottom, and at doors opening onto the ramp. The slope of the landing shall not be steeper than 1 in 48. Every landing shall have a width at least the width of the ramp. Every landing shall be not less than 1525 mm (60 in.) long in the direction of travel.

5.2.5.3.2.2 Any changes in travel direction shall be made only at landings. Such landings shall have minimum dimensions of 1525 mm × 1525 mm (60 in. × 60 in.).

5.2.5.3.3 Drop-Offs. Ramps and landings with drop-offs shall have curbs, walls, railings, or projecting surfaces that prevent people from traveling off the edge of the ramp. Curbs or barriers shall be no less than 100 mm (4 in.) in height.

5.2.5.4 Guards and Handrails. Guards that comply with 5.2.2.4 shall be provided for ramps. Handrails that comply with 5.2.2.4 shall be provided along both sides of a ramp run with a rise greater than 150 mm (6 in.). The height of handrails and guards shall be measured vertically to the top of the guard or rail from the walking surface adjacent thereto.

Exception: Guards and handrails provided for ramped aisles in assembly occupancies in accordance with the provisions of Section 5.15.

5.2.5.5 Enclosure and Protection of Ramps. Ramps in a required means of egress shall be enclosed or protected as a stair in accordance with 5.2.2.5 and 5.2.2.6. The use of Exception No. 2 to 5.2.2.6.3 shall be prohibited.

--`,,,`-`-`,,`,,`,`,,`---

Copyright National Fire Protection Association
Provided by IHS under license with NFPA
No reproduction or networking permitted without license from IHS

Not for Resale

5.2.5.6 Special Provisions for Outside Ramps.

5.2.5.6.1* Visual Protection. Outside ramps shall be arranged to avoid any impediments to their use by persons having a fear of high places. For ramps more than three stories in height, any arrangement intended to meet this requirement shall be no less than 1220 mm (48 in.) in height.

5.2.5.6.2 Water Accumulation. Outside ramps and landings shall be designed to minimize water accumulation on their surfaces.

5.2.6* Exit Passageways.

5.2.6.1* General. Exit passageways shall be permitted to be used in the means of egress. Where exit passageways are used in the means of egress, they shall conform to the general requirements of Section 5.1 and to the special requirements of 5.2.6.

5.2.6.2 Enclosure. An exit passageway shall be separated from other parts of the building as specified in 5.1.1.2.

Exception: Fire windows shall be permitted to be installed in such a separation in a building protected throughout by an approved, supervised automatic sprinkler system.

5.2.6.3 Stair Discharge. An exit passageway that serves as a discharge from a stair enclosure shall have not less than the same fire resistance rating and opening protective fire protection rating as those required for the stair enclosure. *(See 7.2.23 for an exemption to this requirement.)*

5.2.6.4* Width. The width of an exit passageway shall be adequate to accommodate the aggregate required capacity of all exits discharging through it.

Exception No. 1: Where an exit passageway serves occupants of the level of exit discharge as well as other stories, capacity shall not be required to be aggregated.

Exception No. 2: An exit passageway in a covered mall building shall be permitted to accommodate the following independently:

(1) Its assigned occupant load from only the covered mall/pedestrian way
(2) The largest occupant load assigned to it from a single tenant space/store

5.2.6.5 Floor. The floor shall be solid and without perforations.

5.2.7 Escalators and Moving Walks. Escalators and moving walks shall not constitute a part of the required means of egress.

5.2.8 Fire Escape Stairs. Fire escape stairs shall not constitute any of the required means of egress. *(See 7.2.24 for exemption to this requirement.)*

5.2.9 Fire Escape Ladders.

5.2.9.1 General. Fire escape ladders shall be permitted in the means of egress to provide any of the following:

(1) Access to unoccupied roof spaces
(2) A second means of egress from storage elevators
(3) A means of egress from towers and elevated platforms around machinery or similar spaces subject to occupancy by no more than three persons
(4) A secondary means of egress from boiler rooms or similar spaces subject to occupancy by no more than three persons

5.2.9.2 Construction and Installation.

5.2.9.2.1 Fire escape ladders shall comply with ANSI A14.3, *Safety Requirements for Fixed Ladders. (See 7.2.25 for exemption to this requirement.)*

Exception: In industrial occupancies, industrial stairs that comply with the minimum requirements for fixed stairs of ANSI A1264.1, Safety Requirements for Workplace Floor and Wall Openings, Stairs and Railing Systems, shall be permitted where fire escape ladders are permitted.

5.2.9.2.2 Ladders shall be installed with a pitch of not less than 75 degrees.

5.2.9.3 Access. The lowest rung of any ladder shall not be more than 305 mm (12 in.) above the level of the surface beneath it.

5.2.10 Slide Escapes.

5.2.10.1 General.

5.2.10.1.1 Slide escapes that comply with the general requirements of Section 5.1 and the special requirements of 5.2.10 shall be permitted in the means of egress in the following occupancies:

(1) High-hazard industrial occupancies, provided the slide escapes are used in drills to familiarize occupants with their use through practice
(2) Storage occupancies

5.2.10.1.2 Each slide escape shall be of an approved type.

5.2.10.2 Capacity.

5.2.10.2.1 Slide escapes, where permitted as required means of egress, shall be rated at a capacity of 60 persons.

5.2.10.2.2 Slide escapes shall not constitute more than 25 percent of the egress capacity from any building or structure or any individual story thereof.

Exception: Slide escapes shall be permitted to constitute 100 percent of the egress capacity in high-hazard industrial occupancies.

5.2.11* Alternating Tread Devices.

5.2.11.1 Alternating tread devices shall be permitted in the means of egress to provide any of the following:

(1) Access to unoccupied roof spaces
(2) A second means of egress from storage elevators
(3) A means of egress from towers and elevated platforms around machinery or similar spaces subject to occupancy by no more than three persons
(4) A secondary means of egress from boiler rooms or similar spaces subject to occupancy by no more than three persons

5.2.11.2 Alternating tread devices shall comply with the following:

(1) Handrails are provided on both sides of alternating tread devices in accordance with 5.2.2.4.5.
(2) The clear width between handrails is not less than 430 mm (17 in.) and not more than 610 mm (24 in.).
(3) Headroom is not less than 2030 mm (80 in.).
(4) The angle of the device is between 50 and 68 degrees to horizontal.
(5) The height of the riser does not exceed 240 mm (9.5 in.).

Copyright National Fire Protection Association
Provided by IHS under license with NFPA
No reproduction or networking permitted without license from IHS
Not for Resale

(6) Treads have a projected tread depth not less than 145 mm (5.8 in.), measured in accordance with 5.2.2.3.5, with each tread providing a depth not less than 240 mm (9.5 in.) including tread overlap.
(7) A distance not less than 150 mm (6 in.) is provided between the stair handrail and any other object.
(8) The initial tread of the stair begins at the same elevation as the platform, landing, or floor surface.
(9) The alternating treads are not laterally separated by more than 51 mm (2 in.).
(10) The occupant load served is not more than three persons.

5.2.12 Areas of Refuge.

5.2.12.1 General. An area of refuge used as part of a required accessible means of egress in accordance with 5.5.4, or used as a part of any required means of egress, shall conform to the general requirements of Section 5.1 and the special requirements of 5.2.12.2 and 5.2.12.3.

Exception No. 1: Areas of refuge consisting of stories of buildings that are protected throughout by an approved, supervised automatic sprinkler system.

Exception No. 2: In buildings protected throughout by an approved, supervised automatic sprinkler system, two rooms or spaces separated from each other by smoke-resistant partitions in accordance with 3.3.6, Area of Refuge, shall not be required in hotels and dormitories, apartment buildings, mercantile occupancies, and business occupancies.

5.2.12.2 Accessibility.

5.2.12.2.1 Required portions of an area of refuge shall be accessible from the space they serve by an accessible means of egress.

5.2.12.2.2 Required portions of an area of refuge shall have access to a public way, without requiring return to the building spaces through which travel to the area of refuge occurred, via an exit or an elevator.

5.2.12.2.3* Where the exit providing egress from an area of refuge to a public way, in accordance with 5.2.12.2.2, includes stairs, the minimum clear width of landings and stair flights, measured between handrails and at all points below handrail height, shall be 1220 mm (48 in.). *(See 7.2.26 for exemption to this requirement.)*

Exception No. 1: The minimum 1220 mm (48 in.) clear width shall not be required if the area of refuge is separated from the remainder of the story by a horizontal exit that meets the requirements of 5.2.4. (See also 5.2.12.3.4.)

Exception No. 2: For stairs where egress is in the descending direction, a minimum 940 mm (37 in.) clear width, measured at and below handrail height, shall be permitted if approved alternative measures are provided that do not require carrying occupied wheelchairs on the stairs.

5.2.12.2.4* If an elevator provides access from an area of refuge to a public way, in accordance with 5.2.12.2.2, the elevator shall be approved for fire fighter service as specified in Section 211 of ASME/ANSI A17.1, *Safety Code for Elevators and Escalators*. The power supply shall be protected against interruption from fire that occurs within the building but outside the area of refuge. The elevator shall be located in a shaft system that meets the requirements of 5.2.3 for smokeproof enclosures.

Exception No. 1: The smokeproof enclosure shall not be required for areas of refuge that exceed 93 m^2 (1000 ft^2) in size and are created by a horizontal exit that meets the requirements of 5.2.4.

Exception No. 2: Elevators that comply with 5.2.13.

5.2.12.2.5 The area of refuge shall be provided with a two-way communication system for communication between the area of refuge and a central control point. The door to the stair enclosure or the elevator door and the associated portion of the area of refuge that the stair enclosure door or elevator door serves shall be identified by signage. *(See 5.2.12.3.5.)*

5.2.12.2.6* Instructions for summoning assistance, via the two-way communication system, and written identification of the area of refuge location shall be posted adjacent to the two-way communication system.

5.2.12.3 Details.

5.2.12.3.1* Each area of refuge shall be sized to accommodate one wheelchair space of 760 mm × 1220 mm (30 in. × 48 in.) for each 200 occupants, or portion thereof, based on the occupant load served by the area of refuge. Such wheelchair spaces shall maintain the width of a means of egress to no less than that required for the occupant load served and no less than 915 mm (36 in.).

5.2.12.3.2* For any area of refuge not exceeding 93 m^2 (1000 ft^2) in size, it shall be demonstrated by calculation or test that tenable conditions are maintained within the area of refuge for a period of 15 minutes when the exposing space on the other side of the separation creating the area of refuge is subjected to the maximum expected fire conditions.

5.2.12.3.3 Access to any designated wheelchair space in an area of refuge shall not be through more than one adjoining wheelchair space.

5.2.12.3.4* Each area of refuge shall be separated from the remainder of the story by a barrier with a fire resistance rating not less than 1 hour, unless a greater rating is required in other provisions of this *Code*. Such barriers, and any openings in them, shall minimize air leakage and retard the passage of smoke. Doors in such barriers shall have not less than a 20-minute fire protection rating, unless a greater rating is required in other provisions of this *Code*, and shall be either self-closing or automatic-closing in accordance with 5.2.1.8.2. Ducts shall be permitted to penetrate such barriers, unless prohibited in other provisions of this *Code*, and shall be provided with smoke-actuated dampers or other approved means to resist the transfer of smoke into the area of refuge. *(See 7.2.27 for exemption to this requirement.)*

5.2.12.3.5 Each area of refuge shall be identified by tactile and visual signs stating the following: AREA OF REFUGE. The signs shall conform to the requirements of ICC/ANSI A117.1, *American National Standard for Accessible and Usable Buildings and Facilities*, for such signage and shall display the international symbol of accessibility. Such signs shall be located at each door that provides access to the area of refuge.

5.2.12.3.6 Visual signs shall be installed at all exits not providing an accessible means of egress, as defined in 3.3.69.1, and where necessary to indicate clearly the direction to an area of refuge.

5.2.12.3.7 Signs required by 5.2.12.3.5 and 5.2.12.3.6 shall be illuminated as required for exit signs where exit sign illumination is required.

5.2.13 Elevators.

5.2.13.1* General. An elevator that complies with the requirements of 5.2.13 shall be permitted to be used as a second

Copyright National Fire Protection Association
Provided by IHS under license with NFPA
No reproduction or networking permitted without license from IHS
Not for Resale

means of egress from towers as defined in 3.3.105 under the following conditions:

(1) The tower and any attached structure is protected throughout by an approved, supervised automatic sprinkler system.
(2) The tower is subject to occupancy by not more than 90 persons.
(3) Primary egress discharges directly to the outside.
(4) There are no high-hazard content areas in the tower or attached structure.
(5) 100 percent of the egress capacity is provided independent of the elevators.
(6) An evacuation plan is implemented specifically including the elevator. As a part of that plan, staff personnel shall be trained in operation and procedures for elevator emergency use in normal operating mode prior to fire fighter recall.
(7) The tower is not used by the general public.

5.2.13.2 Elevator Evacuation System Capacity.

5.2.13.2.1 The elevator car shall have a capacity of not less than eight persons.

5.2.13.2.2 The elevator lobby shall have a capacity of not less than 50 percent of the occupant load of the area served by the lobby. The capacity shall be calculated by using 0.28 m^2 (3 ft^2) per person and shall also include one wheelchair space of 760 mm × 1220 mm (30 in. × 48 in.) for each 50 persons, or fraction thereof, of the total occupant load served by that lobby.

5.2.13.3 Elevator Lobby. On every floor served by the elevator, there shall be an elevator lobby. Barriers forming the elevator lobby shall have a fire resistance rating of not less than 1 hour and shall be arranged as a smoke barrier.

5.2.13.4 Elevator Lobby Doors. Elevator lobby doors shall have a fire protection rating of not less than 1 hour and shall be self-closing doors or automatic-closing doors in accordance with 5.2.1.8.

5.2.13.5 Door Activation. The elevator lobby doors shall close in response to a signal from a smoke detector located directly outside the elevator lobby and adjacent to or on each door opening. The closing of lobby doors in response to a signal from the building fire alarm system shall be permitted. The closing of one elevator lobby door by means of a smoke detector or a signal from the building fire alarm system shall result in the closing of all elevator lobby doors that serve that elevator evacuation system.

5.2.13.6* Water Protection. Building elements shall be used to restrict water exposure of elevator equipment.

5.2.13.7* Power and Control Wiring. Elevator equipment, elevator communications, elevator machine room cooling, and elevator controller cooling shall be supplied by both normal and standby power. Wiring for power and control shall be located and properly protected to ensure not less than 1 hour of operation in the event of a fire.

5.2.13.8* Communications. Two-way communication systems shall be provided between elevator lobbies and a central control point and between elevator cars and a central control point. Communications wiring shall be protected to ensure not less than 1 hour of operation in the event of a fire.

5.2.13.9* Elevator Operation. Elevators shall be provided with fire fighter service in accordance with ASME/ANSI A17.1, *Safety Code for Elevators and Escalators.*

5.2.13.10 Maintenance. Where an elevator lobby is served by only one elevator car, the elevator evacuation system shall have a program of scheduled maintenance during times of building shutdown or low building activity. Repairs shall be performed within 24 hours of a breakdown.

5.2.13.11 Earthquake Protection. Elevators shall be capable of orderly shutdowns during earthquakes at locations where such a shutdown is an option of ASME/ANSI A17.1, *Safety Code for Elevators and Escalators.*

5.2.13.12 Signage. See 5.10.8.2.

5.3 Capacity of Means of Egress.

5.3.1 Occupant Load.

5.3.1.1 The total capacity of the means of egress for any story, balcony, tier, or other occupied space shall be sufficient for the occupant load thereof.

Exception No. 1: In mixed educational and assembly occupancies, where the assembly occupancy is of a type suitable for use only by the school occupant load (and therefore not subject to simultaneous occupancy), the same egress capacity shall be permitted to serve both sections.

Exception No. 2: In mixed educational and dormitory occupancies, where the classroom and dormitory sections are not subject to simultaneous occupancy, the same egress capacity shall be permitted to serve both sections.

5.3.1.2* The occupant load in any building or portion thereof shall be at least the number determined by dividing the floor area assigned to that use by the occupant load factor for that use as specified in Table 5.3.1.2 and Figure 5.3.1.2. If both gross and net area figures are given for the same occupancy, the following calculations shall be made:

(1) Applying the gross area figure to the gross area of the portion of the building devoted to the use for which the gross area figure is specified
(2) Applying the net area figure to the net area of the specific use for which the net area figure is specified

Exception No. 1: In a special-purpose industrial occupancy, the occupant load shall be the maximum number of persons to occupy the area under any probable conditions.

Exception No. 2: The occupant load for towers shall be the number of persons expected to occupy the space, with spaces not subject to human occupancy because of machinery or equipment excluded from consideration.

5.3.1.3 Occupant Load Increases.

5.3.1.3.1 The occupant load permitted in any building or portion thereof shall be permitted to be increased from that number established for the given use in accordance with 5.3.1.2, where all other requirements of this *Code* are also met, based on such increased number.

5.3.1.3.2 The authority having jurisdiction shall be permitted to require an approved aisle, seating, or fixed equipment diagram to substantiate any increase in occupant load and shall be permitted to require that such diagram be posted in an approved location.

Copyright National Fire Protection Association
Provided by IHS under license with NFPA
No reproduction or networking permitted without license from IHS
Not for Resale

Table 5.3.1.2 Occupant Load Factors

Use	Occupant Load Factor[1]	
	m^2 per person	ft^2 per person
Assembly Use		
Concentrated use, without fixed seating	0.65 net	7 net
Less concentrated use, without fixed seating	1.4 net	15 net
Bench-type seating	1 person/45.7 linear cm	1 person/18 linear in.
Fixed seating	Number of fixed seats	Number of fixed seats
Waiting spaces	*See 5.3.1.3.4.*	*See 5.3.1.3.4.*
Kitchens	9.3	100
Library stack areas	9.3	100
Library reading rooms	4.6 net	50 net
Swimming pools	4.6 — of water surface	50 — of water surface
Swimming pool decks	2.8	30
Exercise rooms with equipment	4.6	50
Exercise rooms without equipment	1.4	15
Stages	1.4 net	15 net
Lighting and access catwalks, galleries, gridirons	9.3 net	100 net
Casinos and similar gaming areas	1	11
Skating rinks	4.6	50
Educational Use		
Classrooms	1.9 net	20 net
Shops, laboratories, vocational rooms	4.6 net	50 net
Day-Care Use	3.3 net	35 net
Health Care Use		
Inpatient treatment departments	22.3	240
Sleeping departments	11.1	120
Detention and Correctional Use	11.1	120
Residential Use		
Hotels and dormitories	18.6	200
Apartment buildings	18.6	200
Board and care, large	18.6	200
Industrial Use		
General and high-hazard industrial	9.3	100
Special-purpose industrial	NA[2]	NA[2]
Business Use	9.3	100
Storage Use (other than mercantile storerooms)	NA[2]	NA[2]
Mercantile Use		
Sales area on street floor[3,4]	2.8	30
Sales area on two or more street floors[4]	3.7	40
Sales area on floor below street floor[4]	2.8	30
Sales area on floors above street floor[4]	5.6	60
Floors or portions of floors used only for offices	*See business use.*	*See business use.*
Floors or portions of floors used only for storage, receiving, and shipping, and not open to general public	27.9	300
Covered mall buildings	Per factors applicable to use of space[5]	Per factors applicable to use of space[5]

Notes:

[1] All factors expressed in gross area unless marked "net."

[2] Not applicable. The occupant load shall be not less than the maximum probable number of occupants present at any time.

[3] For the purpose of determining occupant load in mercantile occupancies where, due to differences in grade of streets on different sides, two or more floors directly accessible from streets (not including alleys or similar back streets) exist, each such floor shall be considered a street floor. The occupant load factor shall be one person for each 3.7 m^2 (40 ft^2) of gross floor area of sales space.

[4] In mercantile occupancies with no street floor, as defined in 3.3.102, but with access directly from the street by stairs or escalators, the principal floor at the point of entrance to the mercantile occupancy shall be considered the street floor.

[5] The portions of the covered mall, where considered a pedestrian way and not used as gross leasable area, shall not be assessed an occupant load based on Table 5.3.1.2. However, means of egress from a covered mall pedestrian way shall be provided for an occupant load determined by dividing the gross leasable area of the covered mall building (not including anchor stores) by the appropriate lowest whole number occupant load factor from Figure 5.3.1.2.

Each individual tenant space shall have means of egress to the outside or to the covered mall based on occupant loads figured by using the appropriate occupant load factor from Table 5.3.1.2.

Each individual anchor store shall have means of egress independent of the covered mall.

Copyright National Fire Protection Association
Provided by IHS under license with NFPA
No reproduction or networking permitted without license from IHS
Not for Resale

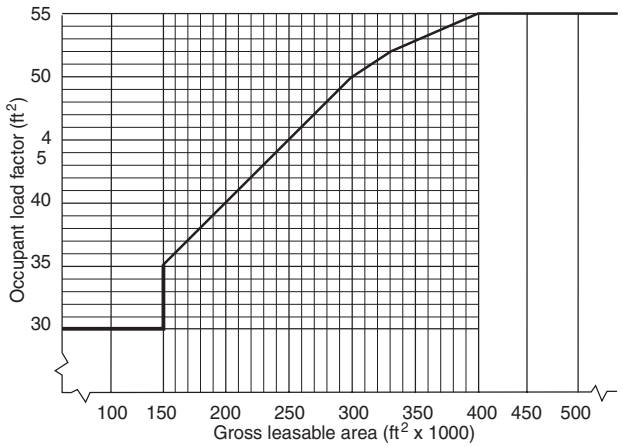

Note: For SI units, 1 ft^2 = 0.0929 m^2.

FIGURE 5.3.1.2 Covered Mall Occupant Load Factors.

5.3.1.3.3 In assembly occupancy areas not larger than 929 m^2 (10,000 ft^2), the occupant load shall not exceed one person in 0.46 m^2 (5 ft^2); in areas larger than 929 m^2 (10,000 ft^2), the occupant load shall not exceed one person in 0.65 m^2 (7 ft^2).

Exception: Waiting spaces as permitted by 5.3.1.3.4.

5.3.1.3.4 In assembly occupancies where persons are admitted to the building at times when seats are not available to them, or when the permitted occupant load has been reached based on Table 5.3.1.2 and persons are allowed to wait in a lobby or similar space until seats or space is available, such use of lobby or similar space shall not encroach upon the required clear width of exits. Such waiting shall be restricted to areas other than the required means of egress. Exits shall be provided for such waiting spaces on the basis of one person for each 0.28 m^2 (3 ft^2) of waiting space area. Such exits shall be in addition to the exits specified for the main auditorium area and shall conform in construction and arrangement to the general rules for exits given in this chapter.

5.3.1.3.5 Where the occupant load of an assembly occupancy is greater than 6000, a life safety evaluation shall be performed in accordance with 5.15.9.

Exception: Where approved by the authority having jurisdiction, the number of usually seated occupants provided with not less than 1.4 m^2 (15 ft^2) of lawn surface in outdoor facilities shall be permitted to be excluded in determining the need for a life safety evaluation.

5.3.1.4 Where exits serve more than one story, the occupant load of each story considered individually shall be permitted to be used in computing the capacity of the exits at that story, provided that the required egress capacity of the exit is not decreased in the direction of egress travel.

5.3.1.5 Where means of egress from stories above and below converge at an intermediate story, the capacity of the means of egress from the point of convergence shall be not less than the sum of the two.

5.3.1.6 Where any required egress capacity from a balcony or mezzanine passes through the room below, that required capacity shall be added to the required egress capacity of the room in which it is located.

5.3.1.7 In assembly occupancies, the occupant load of a stage area that is part of an assembly area shall be included in determining the occupant load for the assembly area.

5.3.2* Measurement of Means of Egress. Width of means of egress shall be measured in the clear at the narrowest point of the exit component under consideration within not more than 2030 mm (80 in.) above the floor.

Exception: For egress components, projections not exceeding 90 mm (3½ in.) on each side shall be permitted at and below a height of 965 mm (38 in.).

5.3.3 Egress Capacity.

5.3.3.1 Egress capacity for approved components of means of egress shall be based on the capacity factors shown in Table 5.3.3.1.

Table 5.3.3.1 Egress Capacity Factors

	Capacity Factor			
	Stairways		Level Components and Ramps	
Occupancy	mm/ person	in./ person	mm/ person	in./ person
Residential board and care	10	0.4	5	0.2
Health care, sprinklered	7.6	0.3	5	0.2
Health care, nonsprinklered	15	0.6	13	0.5
High-hazard contents	18	0.7	10	0.4
All others	7.6	0.3	5	0.2

Exception No. 1: Assembly seating means of egress capacity sized in accordance with Section 5.15.

Exception No. 2: Open structures shall be exempt from the requirements for capacity of means of egress.

5.3.3.2 The required capacity of a corridor shall be the occupant load utilizing the corridor for exit access divided by the required number of exits to which the corridor connects, but the required capacity shall be at least that of the exit to which the corridor leads.

5.3.3.3 In apartments, hotels and dormitories, business occupancies, mercantile occupancies, and large residential board and care facilities, street floor exits shall be sufficient for the occupant load of the street floor plus the required capacity of means of egress stairs and ramps discharging through the street floor.

5.3.4 Minimum Width.

5.3.4.1* The minimum width of any means of egress shall be that required by this chapter for a given egress component and shall be not less than 915 mm (36 in.).

Exception No. 1: The minimum width of an exit access formed by furniture and movable partitions, serving not more than six people, and not more than 15 m (50 ft) in length, shall be at least 455 mm

Copyright National Fire Protection Association
Provided by IHS under license with NFPA
No reproduction or networking permitted without license from IHS
Not for Resale

(18 in.) at and below a height of 965 mm (38 in.) or 710 mm (28 in.) above a height of 965 mm (38 in.) if the minimum 915 mm (36 in.) width can be provided without moving permanent walls. (See 7.2.28 for exemption to this exception.)

Exception No. 2: Doors as specified for in 5.2.1.2 shall not be required to meet the minimum width requirement.

Exception No. 3: In assembly occupancies, aisles, and aisle accessways as specified in Section 5.15 shall not be required to meet the minimum width requirement.

Exception No. 4: Industrial equipment access walkways, platforms, ramps, and stairs that serve as a component of the means of egress from the involved equipment and do not serve more than 20 people shall be permitted to have a minimum 560 mm (22 in.) clear width.

5.3.4.2* Business Occupancy Corridor Width. In business occupancies, the minimum width of any corridor or passageway serving an occupant load of 50 or more shall be 1120 mm (44 in.) in the clear.

5.3.4.3 Assembly Occupancy Corridor Width. In assembly occupancies, the minimum width of any exit access corridor serving 50 or more persons shall be 1120 mm (44 in.).

5.3.4.4 Hotel and Dormitory Corridor Width. In hotels and dormitories, the minimum corridor width shall be not less than 1120 mm (44 in.).

Exception: Corridors within individual guest rooms or individual guest suites.

5.3.4.5 Apartment Building Corridor Width. In apartment buildings, the minimum corridor width shall be not less than 1120 mm (44 in.).

Exception: Corridors with a required capacity of not more than 50 persons shall be not less than 915 mm (36 in.) in width.

5.3.4.6 Large Residential Board and Care Occupancy Corridor Width. In large residential board and care occupancies, the width of corridors shall be sufficient for the occupant load served but shall be not less than 1120 mm (44 in.).

Exception: Corridors serving an occupant load of fewer than 50 shall be not less than 915 mm (36 in.) wide.

5.3.4.7 Educational Occupancy Corridor Width. In educational occupancies, exit access corridors shall be not less than 1830 mm (72 in.) clear width.

5.3.4.8 Educational Occupancy Aisle Width. In educational occupancies, aisles shall be not less than 915 mm (36 in.) wide. The space between parallel rows of seats shall not be subject to the minimum aisle width, provided that the number of seats that intervene between any seat and an aisle does not exceed six.

5.3.4.9 Health Care Occupancy Corridor Width.

5.3.4.9.1* Aisles, corridors, and ramps that are required for exit access in a hospital or nursing home shall be not less than 2440 mm (96 in.) in clear and unobstructed width.

Exception No. 1: Aisles, corridors, and ramps in adjunct areas not intended for the housing, treatment, or use of inpatients shall be not less than 1120 mm (44 in.) in clear and unobstructed width.

Exception No. 2: Exit access within a room or suite of rooms that complies with the requirements of 5.5.1.21.

5.3.4.9.2* Aisles, corridors, and ramps that are required for exit access in a limited care facility or hospital for psychiatric care shall be not less than 1830 mm (72 in.) in clear and unobstructed width.

Exception No. 1: Aisles, corridors, and ramps in adjunct areas not intended for the housing, treatment, or use of inpatients shall be not less than 1120 mm (44 in.) in clear and unobstructed width.

Exception No. 2: Exit access within a room or suite of rooms that complies with the requirements of 5.5.1.21.

5.3.4.10 Ambulatory Health Care Facility Corridor Width. In ambulatory health care facilities, the width of any corridor or passageway that is required for exit access shall be not less than 1120 mm (44 in.) in clear width.

5.3.4.11 Detention and Correctional Occupancy Corridor Width. In detention and correctional occupancies, corridors and ramps that are required for egress shall be not less than 1220 mm (48 in.) in width.

5.3.4.12 Mercantile Occupancy Aisle Width.

5.3.4.12.1 In mercantile occupancies, any required aisle shall be not less than 915 mm (36 in.) in clear width.

5.3.4.12.2 In Class A mercantile occupancies, at least one aisle not less than 1525 mm (60 in.) in width shall lead directly to an exit.

5.3.4.13 Where a single exit access leads to an exit, its capacity, in terms of width, shall be not less than that required of the exit to which it leads. Where more than one exit access leads to an exit, each shall have a minimum width sized in accordance with 5.3.3 for the number of persons it accommodates but not less than required by 5.3.4.12.1.

5.4 Number of Means of Egress.

5.4.1 The minimum number of means of egress from any balcony, mezzanine, story, or portion thereof shall be two unless otherwise specified by this section.

5.4.1.1 Mezzanine or Balcony. A mezzanine or balcony shall be permitted to have a single means of egress where the common path of travel limitations of 5.5.1.8 are met.

5.4.1.2 Assembly Occupancies.

5.4.1.2.1 Balconies or mezzanines that have an occupant load not exceeding 50 shall be permitted to be served by a single means of egress, and such means of egress shall be permitted to lead to the floor below.

5.4.1.2.2 Balconies or mezzanines that have an occupant load exceeding 50 but not exceeding 100 shall have at least two remote means of egress, but both such means of egress shall be permitted to lead to the floor below.

5.4.1.2.3 A second means of egress shall not be required from lighting and access catwalks, galleries, and gridirons if a means of escape to a floor or a roof is provided. Ladders, alternating tread devices, or spiral stairs shall be permitted in such means of escape.

5.4.1.3 Residential Occupancies.

5.4.1.3.1 Hotels, dormitories, or apartment buildings that are protected by an approved, supervised automatic sprinkler system and have four stories or less with not more than four guest rooms or suites or apartments per floor shall be permitted to have a single exit under the following conditions:

(1) The stairway is completely enclosed or separated by barriers that have a fire resistance rating of not less than 1 hour

Copyright National Fire Protection Association
Provided by IHS under license with NFPA
No reproduction or networking permitted without license from IHS
Not for Resale

with self-closing 1-hour fire protection–rated doors protecting all openings between the stairway enclosure and the building.
(2) The stairway does not serve more than one-half story below the level of exit discharge.
(3) All corridors serving as access to exits have not less than a 1-hour fire resistance rating.
(4) There is not more than 10.7 m (35 ft) of travel distance from the entrance door of any guest room or guest suite or apartment to an exit.
(5) One-half-hour fire–rated horizontal and vertical separation between guest rooms or guest suites or apartments is provided.

5.4.1.3.2 In apartment buildings, any dwelling unit shall be permitted to have a single exit, provided that one of the following conditions is met:

(1) The dwelling unit has an exit door opening directly to the street or yard at ground level.
(2) The dwelling unit has direct access to an outside stair complying with 5.2.2 that serves a maximum of two units, both of which are located on the same floor.
(3) The dwelling unit has direct access to an interior stair serving only that unit and separated from all other portions of the building by fire barriers having a minimum 1-hour fire-resistance rating with no openings therein.

5.4.1.4 Mercantile Occupancies.

5.4.1.4.1 A single means of egress shall be permitted in a Class C mercantile occupancy, provided that one of the following conditions is met:

(1) The travel distance does not exceed 23 m (75 ft) to the exit or to a covered mall (if it is considered a pedestrian way).
(2) The travel distance does not exceed 30 m (100 ft) to the exit or to a covered mall (if it is considered a pedestrian way), and the story on which the occupancy is located and all communicating levels that must be traversed to reach the exit or covered mall are protected throughout by an approved, supervised automatic sprinkler system.

5.4.1.4.2 A single means of egress to an exit or to a covered mall (if it is considered a pedestrian way) shall be permitted from a mezzanine if the common path of travel does not exceed 23 m (75 ft) or 30 m (100 ft) if the building is protected throughout by an approved, supervised automatic sprinkler system.

5.4.1.5 Business Occupancies.

5.4.1.5.1 For a room or area with a total occupant load of less than 100 persons and having an exit that discharges directly to the outside at the level of exit discharge for the building, with a total distance of travel, including travel within the exit, from any point not over 30 m (100 ft), a single exit shall be permitted. Such travel shall be on the same floor level or, if traversing of stairs is required, such stairs shall be not more than 4570 mm (180 in.) in height, and the stairs shall be provided with complete enclosures to separate them from any other part of the building with no door openings therein. A single outside stair, in accordance with 5.2.2, shall be permitted to serve all floors allowed within the 4570-mm (180-in.) vertical travel limitation.

5.4.1.5.2 Any business occupancy not over three stories and not exceeding an occupant load of 30 people per floor shall be permitted a single separate exit for each floor if the total travel distance to the outside of the building does not exceed 30 m (100 ft) and if such exit is enclosed in accordance with 5.1.1.2, serves no other levels, and discharges directly to the outside. A single outside stair in accordance with 5.2.2 shall be permitted to serve all floors.

5.4.1.5.3 A single means of egress shall be permitted from a mezzanine if the common path of travel does not exceed 23 m (75 ft), or 30 m (100 ft) if the building is protected throughout by an approved, supervised automatic sprinkler system.

5.4.1.5.4 A single exit shall be permitted for a maximum two-story tenant space/building protected throughout by an approved, supervised automatic sprinkler system if the total travel distance to the outside does not exceed 30 m (100 ft).

5.4.1.6 Industrial Occupancies. In low- and ordinary-hazard industrial occupancies, a single means of egress shall be permitted from any story or section if the exit can be reached within 15 m (50 ft) or 30 m (100 ft) in buildings protected throughout by an approved, supervised automatic sprinkler system.

5.4.1.7 Storage Occupancies.

5.4.1.7.1 A single means of egress shall be permitted from any story or section if the exit can be reached within 15 m (50 ft) or 30 m (100 ft) in buildings protected throughout by an approved, supervised automatic sprinkler system.

5.4.1.7.2 In low-hazard occupancies, a single means of egress shall be permitted from any story or section.

5.4.1.7.3 In bulk storage elevators, there shall be at least two means of egress from all working levels of the head house. One of these means of egress shall be a stair to the level of exit discharge that is enclosed by a dust-resistant 1-hour fire resistance–rated enclosure in accordance with 5.1.1.2. The second means of egress shall be either of the following:

(1) An exterior stair or basket ladder-type fire escape accessible from all working levels of the head house that provides a passage to ground level.
(2) An exterior stair or basket ladder-type fire escape accessible from all working levels of the head house that provides access to the top of adjoining structures and that provides a continuous path to the ground level.

5.4.1.7.4 In underground spaces of bulk storage elevators, one means of egress and one means of escape shall be permitted in lieu of two means of egress.

5.4.1.7.5 Parking Structures.

5.4.1.7.5.1 An opening for the passage of automobiles shall be permitted to serve as an exit from a street floor, provided no door or shutter is installed therein.

5.4.1.7.5.2 In a ramp-type, open-air parking structure with open vehicle ramps not subject to closure, the ramp shall be permitted to serve in lieu of the second means of egress from floors above the level of exit discharge, provided the ramp discharges directly outside at the street level.

5.4.1.7.5.3 For parking structures extending only one floor below the level of exit discharge, a vehicle ramp leading directly to the outside shall be permitted to serve in lieu of the second means of egress, provided no door or shutter is installed therein.

Copyright National Fire Protection Association
Provided by IHS under license with NFPA
No reproduction or networking permitted without license from IHS
Not for Resale

5.4.1.8 Group Day Care Homes.

5.4.1.8.1 Every story occupied by clients shall have not fewer than two remotely located means of escape.

5.4.1.8.2 Every room used for sleeping, living, or dining purposes shall have at least two means of escape, at least one of which shall be a door or stairway that provides a means of unobstructed travel to the outside of the building at street or ground level. The second means of escape shall be permitted to be a window in accordance with 5.5.1.14. No room or space that is accessible only by a ladder or folding stairs or through a trap door shall be occupied for living or sleeping purposes.

5.4.1.8.3 Where spaces on the story above the story of exit discharge are used by clients, at least one means of escape shall be an exit discharging directly to the outside. The second means of escape shall be permitted to be a window in accordance with 5.5.1.14.

5.4.1.8.4 Where clients occupy a story below the level of exit discharge (basement), at least one means of escape shall be an exit discharging directly to the outside, and the vertical travel to ground level shall not exceed 2440 mm (96 in.). The second means of escape shall be permitted to be a window in accordance with 5.5.1.14. No facility shall be located more than one story below the ground. Any stairway to the story above shall be cut off by a fire barrier containing a door that has at least a 20-minute fire protection rating and is equipped with a self-closing device.

5.4.1.9 Open Structures.

5.4.1.9.1 The grade level is exempt from the requirements for the number of means of egress.

5.4.1.9.2 Open structures occupied by not more than three persons, with a travel distance of not more than 60 m (200 ft), shall be permitted to have a single exit.

5.4.1.10 Towers.

5.4.1.10.1 Towers shall be permitted to have a single exit if the following conditions are met:

(1) The tower is subject to occupancy by fewer than 25 persons.
(2) The tower is not used for living or sleeping purposes.
(3) The tower is of noncombustible, limited-combustible, or heavy timber construction.
(4) The tower has no combustible materials in, under, or in the immediate vicinity, except necessary furniture.
(5) There are no high-hazard occupancies in the tower or in the immediate vicinity.
(6) Where the tower is located above a building, the single exit from the tower shall be provided by one of the following:
    (a) An exit enclosure separated from the building with no door openings to or from the building.
    (b) An exit enclosure leading directly to an exit enclosure serving the building with walls and doors separating these enclosures from each other, and another door allowing access to the top floor of the building, which provides access to a second exit serving that floor.

5.4.1.10.2 Towers with 360 degree line-of-sight requirements shall be permitted to have a single means of egress for a distance of travel not exceeding 23 m (75 ft) or 30 m (100 ft) if the tower is sprinklered throughout by an approved, supervised automatic sprinkler system.

5.4.1.11 Piers. Piers used exclusively to moor cargo vessels and to store material shall be exempt from the requirements for the number of means of egress where provided with proper means of egress from structures thereon to the pier and with a single means of access to the mainland, as appropriate with the pier's arrangement.

5.4.2 The minimum number of means of egress from any story or portion thereof shall be as follows:

(1) Occupant load more than 500 but not more than 1000 — 3
(2) Occupant load more than 1000 — 4
(3) For a fenced outdoor assembly occupancy — ≥2 widely separated means of egress from the enclosure. If more than 6000 persons are to be served by such means of egress, there shall be at least three means of egress; if more than 9000 persons are to be served, there shall be at least four means of egress.

5.4.3 In mercantile occupancies and business occupancies, where a minimum of two means of egress are required, a minimum of two exits shall be provided on every story and accessible from every part of every story and mezzanine.

Exception: Exit access travel shall be permitted to be common for the distances allowed as common paths of travel by 5.5.1.8.

5.4.4 In industrial occupancies, where a minimum of two means of egress are required, a minimum of one exit shall be reached without traversing another story.

5.4.5 In detention and correctional occupancies, a minimum of two separate exits shall be provided on every story and accessible from every part of every story, fire compartment, or smoke compartment.

Exception: Exit access travel shall be permitted to be common for the distances allowed as common paths of travel by 5.5.1.8.

5.4.6* In detention and correctional occupancies, a minimum of one approved exit shall be accessible from each fire compartment and each required smoke compartment into which residents are potentially moved in a fire emergency, with the exits arranged so that egress shall not require return through the zone of fire origin.

5.4.7 Accessible means of egress, in accordance with 5.5.4, not utilizing elevators shall be permitted to serve as any or all of the required minimum number of means of egress.

5.4.8 Only the occupant load of each story considered individually shall be required to be used in computing the number of means of egress at that story, provided that the required number of means of egress is not decreased in the direction of egress travel.

5.4.9 Doors other than the hoistway door and the elevator car door shall be prohibited at the point of access to an elevator car.

Exception: Doors that are readily openable from the car side without a key, tool, special knowledge, or special effort.

5.4.10 Elevator lobbies shall have access to at least one exit. Such exit access shall not require the use of a key, tool, special knowledge, or special effort.

5.4.11 Assembly Occupancy Exits.

5.4.11.1* Main Entrance/Exit. Every assembly occupancy shall be provided with a main entrance/exit. The main entrance/exit shall have minimum width sufficient to accommodate

Copyright National Fire Protection Association
Provided by IHS under license with NFPA
No reproduction or networking permitted without license from IHS
Not for Resale

one-half of the total occupant load and shall be at the level of exit discharge or shall connect to a stairway or ramp leading to a street. Each level of an assembly occupancy shall have access to the main entrance/exit, and such access shall have sufficient capacity to accommodate 50 percent of the occupant load of such levels. Where the main entrance/exit from an assembly occupancy is through a lobby or foyer, the aggregate capacity of all exits from the lobby or foyer shall be permitted to provide the required capacity of the main entrance/exit regardless of whether all such exits serve as entrances to the building.

Exception No. 1: A bowling establishment shall have a main entrance/exit capacity sufficient to accommodate 50 percent of the total occupant load regardless of the number of aisles that it serves.

Exception No. 2: In assembly occupancies where there is no well-defined main entrance/exit, exits shall be permitted to be distributed around the perimeter of the building, provided the total exit width furnishes a minimum of 100 percent of the width needed to accommodate the permitted occupant load.

5.4.11.2 Other Exits. Each level of an assembly occupancy shall have access to the main entrance/exit and shall be provided with additional exits of sufficient width to accommodate a minimum of one-half of the total occupant load served by that level. Such exits shall discharge in accordance with Section 5.7. Such exits shall be located as far apart as practicable and as far from the main entrance/exit as practicable. Such exits shall be accessible from a cross aisle or a side aisle.

Exception: In assembly occupancies where there is no well-defined main entrance/exit, exits shall be permitted to be distributed around the perimeter of the building, provided the total exit width furnishes a minimum of 100 percent of the width needed to accommodate the permitted occupant load.

5.4.12 In assembly occupancies, the upper deck of multilevel exhibits exceeding 27.9 m^2 (300 ft^2) shall have at least two remote means of egress.

5.4.13 Health Care Occupancy Exits.

5.4.13.1 In health care occupancies, at least one exit from each floor or fire section shall be one of the following:

(1) A door leading directly outside the building
(2) A stair
(3) A smokeproof enclosure
(4) A ramp
(5) An exit passageway

5.4.13.2 Any fire section not complying with 5.4.13.1 shall be considered part of an adjoining zone. Egress shall not require return through the zone of fire origin.

5.4.14* In health care occupancies, at least two exits shall be accessible from each smoke compartment. Egress shall be permitted through an adjacent compartment(s) but shall not require return through the compartment of fire origin.

5.5 Arrangement of Means of Egress.

5.5.1 General.

5.5.1.1 Exits shall be located and exit access shall be arranged such that exits are readily accessible at all times.

5.5.1.2* Where exits are not immediately accessible from an open floor area, continuous passageways, aisles, or corridors leading directly to every exit shall be provided and shall be arranged to provide access for each occupant to at least two exits by separate paths of travel. Exit access corridors shall provide access to at least two approved exits without passing through any intervening rooms other than corridors, lobbies, and other spaces permitted to be open to the corridor.

Exception No. 1: Where a single exit is permitted by Section 5.4.

Exception No. 2: Common paths of travel as permitted by 5.5.1.8.

Exception No. 3: Existing corridors that require passage through a room to access an exit shall be permitted to continue to be used under the following conditions:

(1) Such arrangement is approved by the authority having jurisdiction.
(2) The path of travel is marked in accordance with Section 5.10.
(3) Doors to such rooms comply with 5.2.1.
(4) Such arrangement is not prohibited by the occupancy chapter.

Exception No. 4: Corridors that are not required to be fire resistance rated shall be permitted to discharge into open floor plan areas.

5.5.1.3 Where more than one exit is required from a building or portion thereof, such exits shall be remotely located from each other and shall be arranged and constructed to minimize the possibility that more than one has the potential to be blocked by any one fire or other emergency condition.

5.5.1.4* Where two exits or exit access doors are required, they shall be placed at a distance from each other that is equal to and not less than one-half the length of the maximum overall diagonal dimension of the building or area to be served, measured in a straight line between the nearest edge of the exit doors or exit access doors. Where exit enclosures are provided as the required exits and are interconnected by a minimum 1-hour fire resistance–rated corridor, exit separation shall be permitted to be measured along the line of travel within the corridor. *(See 7.2.29 for exemption to these requirements.)* Where more than two exits or exit access doors are required, at least two of the required exits or exit access doors shall be arranged to comply with this section. The other exits or exit access doors shall be located so that, if one becomes blocked, the others are available.

Exception No. 1: In buildings protected throughout by an approved, supervised automatic sprinkler system, the minimum separation distance between two exits or exit access doors, measured in accordance with 5.5.1.4, shall be at least one-third the length of the maximum overall diagonal dimension of the building or area to be served.

Exception No. 2: In apartment buildings and hotels and dormitories, the distance between exits addressed by 5.5.1.4 shall not be applicable to common nonlooped exit access corridors in buildings that have corridor doors from the guest room or guest suite or apartments that are arranged such that the exits are located in opposite directions from such doors.

5.5.1.5* Interlocking or scissor stairs shall be permitted to be considered separate exits if enclosed in accordance with 5.1.1.2 and separated from each other by 2-hour fire resistance–rated construction. There shall be no penetrations or communicating openings, whether protected or not, between the stair enclosures.

5.5.1.6* Exit access shall be arranged so that there are no dead ends in corridors.

Exception: Dead ends as permitted by 5.5.1.8.

5.5.1.7 Exit access from rooms or spaces shall be permitted to be through adjoining or intervening rooms or areas, provided

Copyright National Fire Protection Association
Provided by IHS under license with NFPA
No reproduction or networking permitted without license from IHS
Not for Resale

such adjoining rooms are accessory to the area served and are not hazardous areas. Foyers, lobbies, and reception rooms constructed as required for corridors shall not be construed as intervening rooms. *(See also 5.5.2.)*

5.5.1.8 Common paths of travel and dead-end corridors shall be limited to the distances shown in Table 5.5.1.8. *(See 7.2.30 for exemption to this requirement.)*

5.5.1.9 Underground Structures.

5.5.1.9.1 A structure or portions of a structure shall not be considered an underground structure if the story is provided on at least two sides with not less than 1.9 m^2 (20 ft^2) of access opening entirely above the adjoining grade level in each 15 lineal m (50 lineal ft) of exterior enclosing wall area.

5.5.1.9.2 Exits from underground structures that have an occupant load of more than 100 persons in the underground portions of the structure and have a floor used for human occupancy that is more than 9.1 m (30 ft), or more than one level, below the lowest level of exit discharge shall be as follows:

(1) Cut off from the level of exit discharge per Section 5.1
(2) Provided with outside smoke-venting facilities or other means to prevent the exits from becoming charged with smoke from any fire in the areas served by the exits

5.5.1.9.3 Underground Assembly Occupancies.

5.5.1.9.3.1 In assembly occupancies, underground buildings or portions of buildings that have a floor level more than 9.1 m (30 ft) below the level of exit discharge shall comply with the requirements of 5.5.1.9.3.2 through 5.5.1.9.3.4.

Exception No. 1: Areas within buildings used only for service to the building, such as boiler/heater rooms, cable vaults, and dead storage.

Exception No. 2: Auditoriums without intervening occupiable levels that comply with the requirements of this chapter.

5.5.1.9.3.2 Each level more than 9.1 m (30 ft) below the level of exit discharge shall be divided into not less than two smoke compartments by a smoke barrier having a 1-hour fire resistance rating.

(A) Each smoke compartment shall have access to at least one exit without passing through the other required compartment. Any doors connecting required compartments shall be tight-fitting, minimum 1-hour–rated fire doors designed and installed to minimize smoke leakage and to close and latch automatically upon detection of smoke.

(B) Each smoke compartment shall be provided with a mechanical means of moving people vertically, such as an elevator or escalator.

(C) Each smoke compartment shall have an independent air supply and exhaust system that is capable of smoke control or smoke exhaust functions and provides a minimum smoke exhaust rate of six air changes per hour.

(D) Each smoke compartment shall be provided throughout with an automatic smoke detection system. The system shall be designed such that the activation of any two detectors shall cause the smoke control system to operate and the building voice alarm to sound.

5.5.1.9.3.3 Any required smoke control or exhaust system shall be provided with a standby power system that complies with Article 701 of NFPA 70, *National Electrical Code®*.

5.5.1.9.3.4 The building shall be provided with an approved, supervised voice alarm system. A prerecorded evacuation message shall be provided.

5.5.1.10 Industrial Occupancy Ancillary Facilities.

5.5.1.10.1* Industrial occupancy ancillary facilities shall be arranged to allow travel in independent directions after leaving the ancillary facility so that both means of egress paths do not become compromised by the same fire or similar emergency.

5.5.1.10.2* Ancillary facilities in special-purpose industrial occupancies where delayed evacuation is anticipated shall have no less than a 2-hour fire resistance–rated separation from the predominant industrial occupancy and shall have one means of egress that is separated from the predominant industrial occupancy by 2-hour fire resistance–rated construction.

5.5.1.11 Parking Structures with Fuel Dispensing. Where fuel dispensing devices are located within a parking structure, travel away from the fuel dispensing device in any direction shall lead to an exit with no dead end in which occupants might be trapped by fire. Within closed parking structures, exits shall be arranged and located to meet the following additional requirements:

(1) Exits shall lead to the outside of the building on the same level or to stairs; no upward travel shall be permitted unless direct outside exits are available from that floor.
(2) Any story below that story at which fuel is being dispensed shall have exits leading directly to the outside via outside stairs or doors at ground level.

5.5.1.12* Day-Care Occupancies: Closet Doors. In day-care occupancies and dwellings, every closet door latch shall be such that clients can open the door from inside the closet.

5.5.1.13 Day-Care Occupancies: Bathroom Doors. In day-care occupancies and dwellings, every bathroom door lock shall be designed to permit opening of the locked door from the outside in an emergency.

5.5.1.14 Educational and Day-Care Occupancies: Windows for Rescue.

5.5.1.14.1 In educational occupancies, every room or space greater than 23.2 m^2 (250 ft^2) used for classroom or other educational purposes or normally subject to student occupancy shall have not less than one outside window for emergency rescue that complies with (A) through (D):

(A) Such windows shall be openable from the inside without the use of tools and shall provide a clear opening of not less than 510 mm (20 in.) in width, 610 mm (24 in.) in height, and 0.53 m^2 (5.7 ft^2) in area.

(B) The bottom of the opening shall be not more than 1120 mm (44 in.) above the floor, and any latching device shall be capable of being operated from not more than 1370 mm (54 in.) above the finished floor.

(C) The clear opening shall allow a rectangular solid, with a width and height that provides not less than the required 0.53-m^2 (5.7-ft^2) opening and a depth of not less than 510 mm (20 in.), to pass fully through the opening.

(D) Such windows shall be accessible by the fire department and shall open into an area having access to a public way.

Exception No. 1: This requirement shall not apply to buildings protected throughout by an approved, supervised automatic sprinkler system.

Copyright National Fire Protection Association
Provided by IHS under license with NFPA
No reproduction or networking permitted without license from IHS
Not for Resale

Table 5.5.1.8 Common Path and Dead-End Corridor Limits by Occupancy

	Common Path Limit				Dead-End Corridor Limit			
	Unsprinklered		Sprinklered[a]		Unsprinklered		Sprinklered[b]	
Type of Occupancy	m	ft	m	ft	m	ft	m	ft
Assembly	6.1/23[c,d]	20/75[c,d]	6.1/23[c,d]	20/75[c,d]	0[d,e]	0[d,e]	0[d,e]	0[d,e]
Educational	23	75	30	100	6.1	20	15	50
Day Care								
Day-care center	23	75	30	100	6.1	20	15	50
Health Care								
Hospital, nursing home, limited care	NR[g]	NR[g]	NR[g]	NR[g]	9.1	30	9.1	30
Ambulatory Health Care	23[f]	75[f]	30[f]	100[f]	6.1[f]	20[f]	15[f]	50[f]
Detention and Correctional								
Use Conditions II, III, IV	15	50	30	100	15	50	15	50
Use Condition V	15	50	30	100	6.1	20	6.1	20
Residential								
One- and two-family dwellings	NR[g]	NR[g]	NR[g]	NR[g]	NR[g]	NR[g]	NR[g]	NR[g]
Lodging and rooming houses	NR[g]	NR[g]	NR[g]	NR[g]	NR[g]	NR[g]	NR[g]	NR[g]
Hotels and dormitories	10.7[h]	35[h]	15[h]	50[h]	10.7	35	15	50
Apartments	10.7[h]	35[h]	15[h]	50[h]	10.7	35	15	50
Residential board and care								
Small	NR[g]	NR[g]	NR[g]	NR[g]	NR[g]	NR[g]	NR[g]	NR[g]
Large	NA[i]	NA[i]	38	125	NA[i]	NA[i]	15	50
Mercantile								
Stores	23	75	30	100	6.1	20	15	50
Open air	NR[g]	NR[g]	NR[g]	NR[g]	0	0	0	0
Covered mall	23	75	30	100	6.1	20	15	50
Business	23[j]	75[j]	30	100	6.1	20	15	50
Industrial								
General	15	50	30	100	15	50	15	50
Special purpose	15	50	30	100	15	50	15	50
High hazard	0	0	0	0	0	0	0	0
Aircraft servicing hangars, ground floor	15[k]	50[k]	30[k]	100[k]	15[k]	50[k]	15[k]	50[k]
Aircraft servicing hangars, mezzanine floor	15[k]	50[k]	23[k]	75[k]	15[k]	50[k]	15[k]	50[k]
Storage								
Low hazard	NR[g]	NR[g]	NR[g]	NR[g]	NR[g]	NR[g]	NR[g]	NR[g]
Ordinary hazard	15	50	30	100	15	50	30	100
High hazard	0	0	0	0	0	0	0	0
Parking garages, open	15	50	15	50	15	50	15	50
Parking garages, enclosed	15	50	15	50	15	50	15	50
Aircraft storage hangars, ground floor	15[k]	50[k]	30[k]	100[k]	15[k]	50[k]	15[k]	50[k]
Aircraft storage hangars, mezzanine floor	15[k]	50[k]	23[k]	75[k]	15[k]	50[k]	15[k]	50[k]
Underground spaces in grain elevators	15[k]	50[k]	30[k]	100[k]	15[k]	50[k]	30[k]	100[k]

[a] Sprinkler system must be electrically supervised for educational, day care, health care, ambulatory health care, detention and correctional, hotels and dormitories, apartments, large residential board and care, mercantile, business, industrial, and storage occupancies.

[b] Sprinkler system must be electrically supervised for educational, day care, health care, ambulatory health care, detention and correctional, hotels and dormitories, apartments, large residential board and care, mercantile, business, and storage occupancies.

[c] 6.1 m (20 ft) for common path serving >50 persons; 23 m (75 ft) for common path serving ≤50 persons.

[d] See Section 5.15 for special considerations for assembly seating and mezzanines.

[e] Dead-end corridors not permitted; 6.1 m (20 ft) dead-end aisles permitted.

[f] Per business occupancy common path and dead-end corridor limits.

[g] No requirement.

[h] This dimension is from the room/corridor or suite/corridor exit access door to the exit; thus it applies to corridor common path.

[i] Not applicable because *Code* assumes sprinklers are required by the building code. *(See A.1.3, second paragraph.)*

[j] For single tenant spaces with an occupant load of not more than 30 persons, 30 m (100 ft) permitted where common path occurs wholly within the single tenant space.

[k] 0 m (0 ft) if high hazard except as permitted by exception to 5.11.3.

Copyright National Fire Protection Association
Provided by IHS under license with NFPA
No reproduction or networking permitted without license from IHS
Not for Resale

Exception No. 2: This requirement shall not apply where the room or space has a door leading directly to the outside of the building.

Exception No. 3: This requirement shall not apply to rooms located higher than three stories above grade.

5.5.1.14.2 In day-care occupancies, every room or space normally subject to client occupancy, other than bathrooms, shall have not less than one outside window for emergency rescue that complies with (A) through (C):

(A) Such windows shall be openable from the inside without the use of tools and shall provide a clear opening of not less than 510 mm (20 in.) in width, 610 mm (24 in.) in height, and 0.53 m^2 (5.7 ft^2) in area.

(B) The bottom of the opening shall be not more than 1120 mm (44 in.) above the floor.

(C) The clear opening shall allow a rectangular solid, with a width and height that provides not less than the required 0.53-m^2 (5.7-ft^2) opening and a depth of not less than 510 mm (20 in.), to pass fully through the opening.

Exception No. 1: This requirement shall not apply to buildings protected throughout by an approved, supervised automatic sprinkler system.

Exception No. 2: This requirement shall not apply where the room or space has a door leading directly to the outside of the building.

5.5.1.15 Day-Care Occupancies in Apartment Buildings. If the two exit accesses from a day-care occupancy or group day-care occupancy enter the same corridor as the apartment occupancy, the exit accesses shall be separated in the corridor by a smoke barrier having not less than a 1-hour fire resistance rating. The smoke barrier shall be located so that it has an exit on each side.

5.5.1.16 Educational and Day-Care Occupancies: Flexible Plan and Open Plan Buildings. In educational and day-care occupancies, each room occupied by more than 300 persons shall have two or more means of egress entering into separate atmospheres. If three or more means of egress are required, not more than two of them shall enter into a common atmosphere.

5.5.1.17 Arena Floor Egress. Where the floor area of auditoriums and arenas is used for activities and events, at least 50 percent of the occupant load of the floor area shall have means of egress provided without passing through adjacent fixed seating areas.

5.5.1.18 Educational Occupancy Floor Location. In educational occupancies, rooms normally occupied by preschool, kindergarten, or first-grade pupils shall not be located above or below the level of exit discharge. Rooms normally occupied by second-grade pupils shall not be located more than one story above the level of exit discharge.

Exception: Rooms or areas located on floor levels other than as specified in 5.5.1.18 shall be permitted to be used where provided with independent means of egress dedicated for use by the preschool, kindergarten, first-grade, or second-grade students.

5.5.1.19 Educational Occupancy Corridor Obstructions. In educational occupancies, drinking fountains or other equipment, fixed or movable, shall not be placed so as to obstruct the required minimum 1830-mm (72-in.) corridor width.

5.5.1.20 Educational Occupancy Corridor Access. In educational occupancies, every room that is normally occupied shall have an exit access door that leads directly to an exit access corridor or exit.

Exception No. 1: This requirement shall not apply where there is an exit door opening directly to the outside or to an exterior balcony or corridor.

Exception No. 2: One room shall be permitted to intervene between a normally occupied student room and an exit access corridor, provided the following:

(1) The total travel from a room served by an intervening room to the corridor door or exit shall not exceed 23 m (75 ft); and
(2) Clothing, personal effects, or other materials deemed hazardous by the authority having jurisdiction shall be stored in metal lockers, provided they do not obstruct the exit access, or the intervening room shall be sprinklered; and either
(3) The intervening room shall have installed approved fire detection that will activate the building alarm, or
(4) The building shall be protected by an approved, supervised automatic sprinkler system.

5.5.1.21 Special Provisions for Health Care Occupancy Arrangement of Means of Egress.

5.5.1.21.1 Every habitable room shall have an exit access door that leads directly to an exit access corridor.

Exception No. 1: This requirement shall not apply where there is an exit door opening directly to the outside from the room at the ground level.

Exception No. 2: Patient sleeping rooms shall be permitted to have one intervening room if the intervening room is not used as an exit access for more than eight patient sleeping beds.

Exception No. 3: Special nursing suites shall be permitted to have one intervening room, provided that the arrangement allows for direct and constant visual supervision by nursing personnel.

Exception No. 4: For rooms other than patient sleeping rooms, one or more adjacent rooms shall be permitted to intervene in accordance with 5.5.1.21.8.

5.5.1.21.2 Any patient sleeping room, or any suite that includes patient sleeping rooms, of more than 93 m^2 (1000 ft^2) shall have at least two exit access doors remotely located from each other.

5.5.1.21.3 Any room or any suite of rooms, other than patient sleeping rooms, of more than 232 m^2 (2500 ft^2) shall have at least two exit access doors remotely located from each other.

5.5.1.21.4 Any suite of rooms that complies with the requirements of 5.5.1.21 shall be permitted to be subdivided with non–fire-rated, noncombustible or limited-combustible partitions.

5.5.1.21.5 Intervening rooms shall not be hazardous areas.

5.5.1.21.6 Suites of sleeping rooms shall not exceed 465 m^2 (5000 ft^2).

5.5.1.21.7 Suites of rooms, other than patient sleeping rooms, shall not exceed 929 m^2 (10,000 ft^2).

5.5.1.21.8 Suites of rooms, other than patient sleeping rooms, shall be permitted to have one intervening room if the travel distance within the suite to the exit access door is not greater than 30 m (100 ft) and shall be permitted to have two intervening rooms if the travel distance within the suite to the exit access door is not greater than 15 m (50 ft).

--`,,,-`-`,,`,,`,`,,`---

Copyright National Fire Protection Association
Provided by IHS under license with NFPA
No reproduction or networking permitted without license from IHS

Not for Resale

5.5.1.21.9 Every corridor shall provide access to at least two approved exits without occupants having to pass through any intervening rooms or spaces other than corridors or lobbies.

5.5.1.21.10 Windowless buildings or windowless portions of buildings shall not be used for patient sleeping rooms.

5.5.1.22 In ambulatory health care facilities, any room and any suite of rooms of more than 232 m^2 (2500 ft^2) shall have at least two exit access doors remotely located from each other.

5.5.1.23 In ambulatory health care facilities, at least two exits shall be accessible from each smoke compartment. Egress shall be permitted through adjacent compartments but shall not require return through the compartment of fire origin.

5.5.1.24 In detention and correctional occupancies, every sleeping room shall have a door that leads directly to an exit access corridor.

Exception No. 1: This requirement shall not apply where there is an exit door opening directly to the outside from the room at the ground level.

Exception No. 2: One adjacent room, such as a day room, group activity space, or other common space, shall be permitted to intervene. Where sleeping rooms directly adjoin a day room or group activity space that is utilized for access to an exit, such sleeping rooms shall be permitted to open directly to the day room or space and shall be permitted to be separated in elevation by a one-half or full story height.

5.5.1.25 In detention and correctional occupancies, a sally port shall be permitted in a means of egress, provided that there are provisions for continuous and unobstructed travel through the sally port during an emergency egress condition.

5.5.1.26 Subdivision of Detention and Correctional Occupancy Resident Housing Spaces. Subdivision of facility spaces shall comply with Table 5.5.1.26. *(See 7.2.31 for exemption to this requirement.)*

5.5.1.27 In hotels and dormitories, any guest room or any guest suite of rooms in excess of 185 m^2 (2000 ft^2) shall be provided with at least two exit access doors remotely located from each other.

5.5.1.28 In large board and care facilities, any room or any suite of rooms in excess of 185 m^2 (2000 ft^2) shall be provided with at least two exit access doors remotely located from each other.

5.5.1.29 Special Provisions for Mercantile Occupancy Arrangement of Means of Egress.

5.5.1.29.1 Open Stairs and Ramps. No inside open stairway or inside open ramp shall be permitted to serve as a component of the required means of egress system for more than one floor.

5.5.1.29.2 Floors Below Street Floor. Where there are two or more floors below the street floor, the same stair or other exit

Table 5.5.1.26 Subdivision of Resident Housing Spaces

	Use Condition						
Feature	**II**	**III**		**IV**		**V**
Room-to-room separation	NR	NR		NR		SR
Room face–to–corridor separation	NR	NR		NR		SR
Room face–to–common space separation	NR	NR ≤15 m[a] (≤50 ft)[a]	SR >15 m[a] (>50 ft)[a]	NR ≤15 m[a] (≤50 ft)[a]	SR >15 m[a] (>50 ft)[a]	SR
Common space–to–corridor separation	NR	NR		NR		SR
Total openings in solid room face where room face is required to be smoke resistant or fire rated[b]	0.08 m^2 (0.85 ft^2)	0.08 m^2 (0.85 ft^2)		0.08 m^2 (0.85 ft^2)		0.08 m^2 (0.85 ft^2), closable from inside, or 0.08 m^2 (0.85 ft^2) with smoke control

NR: No requirement.
SR: Smoke resistant.
Notes:
1. Doors in openings in partitions required to be smoke resistant (SR) in accordance with Table 5.5.1.26 shall be substantial doors of construction that resists the passage of smoke. Latches and door closers shall not be required on cell doors.
2. Under Use Condition II, Use Condition III, or Use Condition IV, a space subdivided by open construction (any combination of grating doors and grating walls or solid walls) shall be permitted to be considered one room if housing not more than 16 persons. The perimeter walls of such space shall be of smoke-resistant construction. Smoke detection shall be provided in such space. Under Use Condition IV, common walls between sleeping areas within the space shall be smoke resistant, and grating doors and fronts shall be permitted to be used. Under Use Condition II and Use Condition III, open dormitories shall be permitted to house more than 16 persons as permitted by other sections of this chapter.
3. Where barriers are required to be smoke resistant (SR), the provisions of 5.13 applicable to smoke partitions shall not apply.
[a]Travel distance through the common space to the exit access corridor.
[b]"Total openings in solid room face" includes all openings (for example, undercuts, food passes, grilles), the total of which shall not exceed 0.08 m^2 (0.85 ft^2). All openings shall be 915 mm (36 in.) or less above the floor.

Copyright National Fire Protection Association
Provided by IHS under license with NFPA
No reproduction or networking permitted without license from IHS
Not for Resale

shall be permitted to serve all floors, but all required exits from such areas shall be independent of any open stairways between the street floor and the floor below it.

5.5.1.29.3 Outside Exits. Where a level, outside exit from upper floors is possible because of hills, such outside exits shall be permitted to serve instead of horizontal exits. Where, however, such outside exits from the upper floor also serve as an entrance from a principal street, the upper floor shall be classified as a street floor in accordance with the definition in 3.3.102 and shall be subject to the requirements of this chapter for street floors.

5.5.1.29.4 Doors at Stairs. All doors at the foot of stairs from upper floors or at the head of stairs leading to floors below the street floor shall swing in the direction of egress travel.

5.5.1.29.5 Aisles Leading to Exits. Aisles leading to each exit shall be required. The aggregate width of such aisles shall be equal to at least the required width of the exit.

5.5.1.29.6 Exterior Wall Entrance. If the only means of customer entrance is through one exterior wall of the building, two-thirds of the required egress width shall be located in this wall.

Exception: Bulk merchandising retail buildings.

5.5.1.29.7 Egress Through Checkout Stands. At least one-half of the required exits shall be located so as to be reached without passing through checkout stands. In no case shall checkout stands or associated railings or barriers obstruct exits, required aisles, or approaches thereto.

5.5.1.29.8* Use of Carts. Where wheeled carts or buggies are used by customers, adequate provision shall be made for the transit and parking of such carts to minimize the possibility that they might obstruct means of egress.

5.5.1.29.9 Exit Access Through Storerooms. Exit access in Class A and Class B mercantile occupancies that are protected throughout by an approved, supervised automatic sprinkler system, and exit access in all Class C mercantile occupancies, shall be permitted to pass through storerooms, provided that the following conditions are met:

(1) Not more than 50 percent of exit access shall be provided through the storeroom.
(2) The storeroom shall not be subject to locking.
(3) The main aisle through the storeroom shall be not less than 1120 mm (44 in.) wide.
(4) The path of travel, defined with fixed barriers, through the storeroom shall be direct and continuously maintained in an unobstructed condition.

5.5.1.30 Special Provisions for Covered Mall Buildings.

5.5.1.30.1* The covered mall building shall be treated as a single building for the purpose of calculation of means of egress and shall be subject to the requirements for appropriate occupancies. The covered mall shall be at least of sufficient clear width to accommodate egress requirements as set forth in other sections of this *Code*.

Exception: The covered mall shall be permitted to be considered a pedestrian way, in which case the distance of travel within a tenant space to an exit or to the covered mall shall not exceed 60 m (200 ft) [see 5.6.1] or shall be the maximum for the appropriate occupancy; plus, an additional 60 m (200 ft) shall be permitted for travel through the covered mall space if all of the following requirements are met:

(1) The covered mall shall be at least of sufficient clear width to accommodate egress requirements as set forth in other sections of this chapter, but in no case shall be less than 6100 mm (240 in.) wide in its narrowest dimension.
(2) On each side of the mall floor area, the covered mall shall be provided with an unobstructed exit access of not less than 3050 mm (120 in.) in clear width parallel to and adjacent to the mall tenant front. Such exit access shall lead to an exit having a width of not less than 1675 mm (66 in.).
(3) The covered mall and all buildings connected thereto shall be protected throughout by an approved, supervised automatic sprinkler system. The system shall be installed in such a manner that any portion of the system that serves tenant spaces can be taken out of service without affecting the operation of the portion of the system that serves the covered mall.
(4) Walls that divide stores from each other shall extend from the floor to the underside of the roof deck, floor deck above, or ceiling where the ceiling is constructed to limit the transfer of smoke. Where the tenant areas are provided with an engineered smoke control system, walls shall not be required to divide stores from each other. No separation shall be required between a tenant space and the covered mall.
(5) The covered mall shall be provided with a smoke control system.

5.5.1.30.2 Covered Mall Egress Details.

5.5.1.30.2.1 Every floor of a covered mall shall be provided with a number of means of egress as specified by Section 5.4 with no less than two means of egress remotely located from each other.

5.5.1.30.2.2 Class A and Class B mercantile occupancies connected to a covered mall shall be provided with the number of means of egress required by Section 5.4 with no less than two means of egress remotely located from each other.

5.5.1.30.2.3* Each individual anchor store shall have means of egress independent of the covered mall.

5.5.1.30.2.4 Every covered mall shall be provided with unobstructed exit access parallel to and adjacent to the mall tenant fronts. This exit access shall extend to each mall exit.

5.5.1.31 Special Provisions for Bulk Merchandising Retail Buildings.

5.5.1.31.1 New bulk merchandising retail buildings that exceed 1115 m^2 (12,000 ft^2) in area shall comply with the requirements of this chapter as modified by 5.5.1.31.2.

5.5.1.31.2 Not less than 50 percent of the required egress capacity shall be located independent of the main entrance/exit doors.

5.5.1.32 Long Piers. Piers not meeting the conditions of 5.4.1.11 and occupied for other than cargo handling and storage shall have means of egress arranged in accordance with this chapter. In addition, one of the following measures shall be provided on piers that extend over 46 m (150 ft) from shore, to minimize the possibility that fire under or on the pier might block escape of occupants to the shore:

(1) The pier shall be arranged to provide two separate paths of travel to shore, such as two well separated walkways or independent structures.
(2) The pier deck shall be open and fire resistive, and set on noncombustible supports.
(3) The pier shall be open and unobstructed and shall be 15 m (50 ft) or more in width if less than 152 m (500 ft) long, or its

Copyright National Fire Protection Association
Provided by IHS under license with NFPA
No reproduction or networking permitted without license from IHS
Not for Resale

width shall be not less than 10 percent of its length if over 152 m (500 ft) long.

(4) The pier deck shall be provided with automatic sprinkler protection for its combustible substructure and all superstructures.

5.5.2 Impediments to Egress. See 5.1.6.

5.5.2.1 In no case shall access to an exit be through kitchens, storerooms, restrooms, workrooms, closets, bedrooms or similar spaces, or other rooms subject to locking.

Exception No. 1: Exit access shall be permitted to pass through rooms or spaces in health care occupancies and detention and correctional occupancies subject to locking as permitted by 5.2.1.

Exception No. 2: Exit access shall be permitted to pass through storerooms in mercantile occupancies in accordance with 5.5.1.29.9.

5.5.2.2* Exit access and exit doors shall be designed and arranged to be clearly recognizable. Hangings or draperies shall not be placed over exit doors or be located such that they conceal or obscure any exit. Mirrors shall not be placed on exit doors. Mirrors shall not be placed in or adjacent to any exit in such a manner as to confuse the direction of exit.

Exception: Curtains shall be permitted across means of egress openings in tent walls under the following conditions:

(1) Curtains are distinctly marked in contrast to the tent wall so as to be recognizable as means of egress.
(2) Curtains are installed across an opening that is at least 1830 mm (72 in.) in width.
(3) Curtains are hung from slide rings or equivalent hardware so as to be readily moved to the side to create an unobstructed opening in the tent wall of a width no less than that required of door openings.

5.5.3 Exterior Paths of Exit Access.

5.5.3.1 Exit access shall be permitted to be by means of any exterior balcony, porch, gallery, or roof that conforms to the requirements of this chapter.

5.5.3.2 The long side of the balcony, porch, gallery, or similar space shall be at least 50 percent open and shall be arranged to restrict the accumulation of smoke.

5.5.3.3 Exterior exit access balconies shall be separated from the interior of the building by walls and opening protectives as required for corridors.

Exception No. 1: Where the exterior exit access balcony is served by at least two remote stairs that are accessed without any occupant needing to travel past an unprotected opening to reach one of the stairs.

Exception No. 2: Where dead ends on the exterior exit access do not exceed 6100 mm (240 in.).

5.5.3.4 Exterior exit access shall be arranged such that there are no dead ends in excess of those permitted for dead-end corridors by 5.5.1.8.

5.5.4 Accessible Means of Egress.

5.5.4.1* Areas accessible to people with severe mobility impairment shall have at least two accessible means of egress. *(See 3.3.69.1, Accessible Means of Egress.)* Access shall be provided to no less than one area of refuge or to one accessible exit that provides an accessible route to an exit discharge, within the allowable travel distance.

Exception No. 1: Exit access travel along the accessible means of egress shall be permitted to be common for the distances permitted as common paths of travel.

Exception No. 2: A single accessible means of egress shall be permitted from buildings or areas of buildings that are permitted to have a single exit.

Exception No. 3: This requirement shall not apply where health care occupancies are protected throughout by an approved, supervised automatic sprinkler system.

5.5.4.2 If two accessible means of egress are required, the exits serving these paths shall be placed at a distance from each other of not less than one-half the length of the maximum overall diagonal dimension of the building or area to be served, measured in a straight line between the nearest edge of the exit doors or exit access doors. If exit enclosures are provided as the required exits and are interconnected by a minimum 1-hour fire resistance–rated corridor conforming to the requirements of 5.1.1.1, exit separation shall be permitted to be measured along the line of travel within the corridor.

Exception No. 1: Buildings protected throughout by an approved, supervised automatic sprinkler system.

Exception No. 2: Where the physical arrangement of means of egress prevents the possibility that access to both accessible means of egress will be blocked by any one fire or other emergency condition as approved by the authority having jurisdiction.

5.5.4.3 Each required accessible means of egress shall be continuous from each accessible occupied area to a public way or area of refuge in accordance with 5.2.12.2.2.

5.5.4.4 Where an exit stair is used in an accessible means of egress, it shall comply with 5.2.12.2.3 and either shall incorporate an area of refuge within an enlarged story-level landing or shall be accessed from an area of refuge.

5.5.4.5 To be considered part of an accessible means of egress, an elevator shall be in accordance with 5.2.12.2.4.

5.5.4.6 A smoke barrier that additionally has a minimum 1-hour fire resistance rating, and a horizontal exit in accordance with 5.2.4, to be considered part of an accessible means of egress, shall discharge to an area of refuge in accordance with 5.2.12.

5.5.4.7 Accessible stories that are four or more stories above or below a story of exit discharge shall have at least one elevator that complies with 5.2.12.2.4.

5.6 Measurement of Travel Distance to Exits.

5.6.1* The travel distance in any occupied space to at least one exit, measured in accordance with the following requirements, shall not be more than the limits specified in Table 5.6.1. *(See 7.2.32 for exemptions to these requirements.)*

Exception No. 1: Open structures shall be exempt from travel distance limitations.

Exception No. 2: Towers occupied by not more than three persons shall be exempt from travel distance limitations.

5.6.2* The travel distance to an exit shall be measured on the floor or other walking surface along the centerline of the natural path of travel, starting from the most remote point subject to occupancy, curving around any corners or obstructions with a 305-mm (12-in.) clearance therefrom, and ending at the center of the doorway or other point at which the exit begins. If measurement includes stairs, the measurement shall be taken in the plane of the tread nosing.

Copyright National Fire Protection Association
Provided by IHS under license with NFPA
No reproduction or networking permitted without license from IHS
Not for Resale

Table 5.6.1 Travel Distance Limits by Occupancy

Type of Occupancy	Travel Distance Limit			
	Unsprinklered		Sprinklered[a]	
	m	ft	m	ft
Assembly	45[b]	150[b]	60[b]	200[b]
Within the exhibit booth or exhibit enclosure to an exit access aisle	15	50	15	50
Educational	45	150	60	200
Day care				
Day care center				
From room door to exit	30	100	45	150
Total travel distance	45	150	60	200
Within sleeping room to exit access door	15	50	15	50
Health care				
Hospital, nursing home, and limited care				
Within room to exit access door	NA[c]	NA[c]	15	50
From room door to exit	NA[c]	NA[c]	45	150
Total travel distance	NA[c]	NA[c]	60	200
Ambulatory health care				
From room door to exit	30	100	45	150
Total travel distance	45	150	60	200
Detention and correctional				
Within sleeping room to exit access door	NA[c]	NA[c]	30	100
Within open dormitory, with smoketight construction and minimum two exit access doors, to exit access door	NA[c]	NA[c]	30	100
From room door to exit	NA[c]	NA[c]	45	150
Total travel distance	NA[c]	NA[c]	60	200
Residential				
One- and two- family dwellings	NR[d]	NR[d]	NR[d]	NR[d]
Lodging and rooming houses	NR[d]	NR[d]	NR[d]	NR[d]
Hotels and dormitories				
Within guest room or guest suite to corridor door	23	75	38	125
From corridor door to exit	30	100	60	200
From corridor door to exit via exterior exit access	60	200	60	200
Total travel distance if exterior exit access (addressed in above line) is used	84	275	99	325
Total travel distance without exterior exit access	53	175	99	325
Apartments				
Within living unit to corridor door	23	75	38	125
From corridor door to exit	30	100	60	200
From corridor door to exit via exterior exit access	60	200	60	200
From areas other than living units to exit	60	200	76	250
Total travel distance if exterior exit access (addressed in above line) is used	84	275	99	325
Total travel distance without exterior exit access	53	175	99	325
Board and care				
Small	NR[d]	NR[d]	NR[d]	NR[d]
Large				
Within room, suite, or living unit to corridor door	23	75	38	125
From corridor door to exit	30	100	60	200
From corridor door to exit via exterior exit access	60	200	60	200
Total travel distance if exterior exit access (addressed in above line) is used	84	275	99	325
Total travel distance without exterior exit access	53	175	99	325

Copyright National Fire Protection Association
Provided by IHS under license with NFPA
No reproduction or networking permitted without license from IHS
Not for Resale

Table 5.6.1 *Continued*

Type of Occupancy	Travel Distance Limit			
	Unsprinklered		Sprinklered[a]	
	m	ft	m	ft
Mercantile				
Stores	30	100	60	200
Open air	NR[d]	NR[d]	NR[d]	NR[d]
Covered mall	30	100	120[e]	400[e]
Business	60	200	91	300
Industrial				
General	60	200	75[f]	250[f]
Special purpose, not high hazard	91	300	122	400
High hazard	23	75	23	75
Aircraft servicing hangars, ground floor	Note g	Note g	Note g	Note g
Aircraft servicing hangars, mezzanine floor	23	75	23	75
Storage				
Low hazard	NR[d]	NR[d]	NR[d]	NR[d]
Ordinary hazard	60	200	122	400
High hazard	23	75	30[h]	100[h]
Parking garages, open	60	200	91	300
Parking garages, enclosed	45	150	60	200
Aircraft storage hangars, ground floor	Note g	Note g	Note g	Note g
Aircraft servicing hangars, mezzanine floor	23	75	23	75
Underground spaces in grain elevators	60	200	122	400

[a] Sprinkler system must be electrically supervised.
[b] See 5.15.10 for special considerations for smoke-protected assembly seating.
[c] Not applicable because *Code* assumes sprinklers are required by the building code. *(See A.1.3, second paragraph.)*
[d] No requirement.
[e] See 5.5.1.30 for special travel distance considerations in covered malls that are considered pedestrian ways.
[f] 122 m (400 ft) if single-story low or ordinary hazard with smoke and heat venting.
[g] Provide exits along exterior wall at ≤45-m (≤150-ft) intervals and in horizontal exits at ≤30-m (≤100-ft) intervals.
[h] 45 m (150 ft) where flammable and combustible liquid products are stored and protected in accordance with NFPA 30, *Flammable and Combustible Liquids Code*.

5.6.3* If open stairways or ramps are permitted as a path of travel to required exits, the distance shall include the travel on the stairway or ramp and the travel from the end of the stairway or ramp to an outside door or other exit in addition to the distance traveled to reach the stairway or ramp.

5.6.4 Travel distance limitations shall be as specified in Table 5.6.1 and for high-hazard areas in accordance with Section 5.11.

5.6.5 If any part of an exterior exit is within 3050 mm (120 in.) horizontal distance of any unprotected building opening, as permitted in the Exceptions to 5.2.2.6.3 for outside stairs, the travel distance to the exit shall include the length of travel to ground level.

5.7 Discharge from Exits.

5.7.1* All exits shall terminate at a public way or at an exterior exit discharge. Yards, courts, open spaces, or other portions of the exit discharge shall be of required width and size to provide all occupants with access to a public way.

Exception No. 1: Interior exit discharge as permitted in 5.7.2.

Exception No. 2: Rooftop exit discharge as permitted in 5.7.6.

Exception No. 3: In detention and correctional occupancies, exits shall be permitted to discharge into a fenced or walled courtyard, provided that not more than two walls of the courtyard are the building walls from which egress is being made. Enclosed yards or courts shall be of sufficient size to accommodate all occupants at a distance of no less than 15 m (50 ft) from the building with a net area of 1.4 m^2 (15 ft^2) per person.

5.7.2 Not more than 50 percent of the required number of exits, and not more than 50 percent of the required egress capacity, shall be permitted to discharge through areas on the level of exit discharge, provided that the requirements of (A), (B), and (C) are met.

Exception No. 1: In detention and correctional occupancies, all exits shall be permitted to discharge through the level of exit discharge. The requirements of 5.7.2 shall be waived if not more than 50 percent of the exits discharge into a single fire compartment separated from other compartments by construction having not less than a 1-hour fire resistance rating.

Exception No. 2: Open structures that are permitted to have a single exit per 5.4.1.9.2 shall be permitted to have 100 percent of the exit discharge through areas on the level of exit discharge.

Copyright National Fire Protection Association
Provided by IHS under license with NFPA
No reproduction or networking permitted without license from IHS
Not for Resale

Exception No. 3: Towers that are permitted to have a single exit per 5.4.1.10.1 or 5.4.1.10.2 shall be permitted to have 100 percent of the exit discharge through areas on the level of exit discharge.

(A) Such discharge shall lead to a free and unobstructed path to the exterior of the building, and such path shall be readily visible and identifiable from the point of discharge from the exit.

(B) The level of discharge shall be protected throughout by an approved, automatic sprinkler system, or the portion of the level of discharge used for this purpose shall be protected by an approved, automatic sprinkler system and separated from the nonsprinklered portion of the floor by a fire resistance rating that meets the requirements for the enclosure of exits *(see 5.1.1.2.1).*

Exception: Where the discharge area is a vestibule or foyer that meets all of the following criteria:

(1) The depth from the exterior of the building shall not be more than 3050 mm (120 in.) and the length shall not be more than 9140 mm (360 in.).
(2) The foyer shall be separated from the remainder of the level of discharge by construction that provides protection no less than the equivalent of wired glass in steel frames.
(3) The foyer serves only as means of egress and includes an exit directly to the outside.

(C) The entire area on the level of discharge shall be separated from areas below by construction that has a fire resistance rating no less than that required for the exit enclosure.

Exception: Levels below the level of discharge shall be permitted to be open to the level of discharge in an atrium.

5.7.3 The exit discharge shall be arranged and marked to make clear the direction of egress to a public way. Stairs shall be arranged so as to make clear the direction of egress to a public way. Stairs that continue more than one-half story beyond the level of exit discharge shall be interrupted at the level of exit discharge by partitions, doors, or other effective means.

5.7.4 Doors, stairs, ramps, corridors, exit passageways, bridges, balconies, escalators, moving walks, and other components of an exit discharge shall comply with the detailed requirements of this chapter for such components.

5.7.5 Signs. See 5.2.2.5.4 and 5.2.2.5.5.

5.7.6 Where approved by the authority having jurisdiction, exits shall be permitted to discharge to roofs of other sections of the building or to an adjoining building where the roof construction has a fire resistance rating not less than the equivalent of that required for the exit enclosure and where there is a continuous means of egress from the roof.

5.7.7 In assembly occupancies where the principal entrance to an assembly occupancy is via a terrace, either raised or depressed, such terrace shall be permitted to be considered to be the level of exit discharge under the following conditions:

(1) The terrace is at least as long (measured parallel to the building) as the total width of the exit(s) it serves but not less than 1525 mm (60 in.) long.
(2) The terrace is at least as wide (measured perpendicularly to the building) as the exit(s) it serves but not less than 3050 mm (120 in.) wide.
(3) Required stairs leading from the terrace to grade are protected in accordance with 5.2.2.6.3 or are a minimum of 3050 mm (120 in.) from the building.

5.7.8 In educational occupancies, every classroom or room used for educational purposes or student occupancy below the floor of exit discharge shall have access to at least one exit that leads directly to the exterior at level of discharge without entering the floor above.

5.7.9 In hotels and dormitories, the distance of travel from the termination of the exit enclosure to an exterior door that leads to a public way shall not exceed 30 m (100 ft).

5.7.10* In mercantile occupancies, 50 percent of the exits shall be permitted to discharge through the level of exit discharge in accordance with 5.7.2 only where the building is protected throughout by an approved, supervised automatic sprinkler system, and the distance of travel from the termination of the exit enclosure to an outside street door shall not exceed 15 m (50 ft).

5.8 Illumination of Means of Egress.

5.8.1 General.

5.8.1.1* Illumination of means of egress shall be provided in accordance with this section for every building and structure. For the purposes of this requirement, exit access shall include only designated stairs, aisles, corridors, ramps, escalators, and passageways leading to an exit. For the purposes of this requirement, exit discharge shall include only designated stairs, aisles, corridors, ramps, escalators, walkways, and exit passageways leading to a public way.

Exception No. 1: With permission of the authority having jurisdiction, illumination of means of egress shall not be required in industrial and storage occupancy structures that are occupied only during daylight hours, with skylights or windows arranged to provide the required level of illumination on all portions of the means of egress during these hours.

Exception No. 2: Assembly occupancy private party tents that are not larger than 111.5 m^2 (1200 ft^2) shall be exempt from illumination of means of egress requirements.

Exception No. 3: Open structures shall be exempt from illumination of means of egress requirements.

Exception No. 4: Towers occupied by not more than three persons shall be exempt from illumination of means of egress requirements.

5.8.1.2 Illumination of means of egress shall be continuous during the time that the conditions of occupancy require that the means of egress be available for use. Artificial lighting shall be employed at such places and for such periods of time as required to maintain the illumination to the minimum criteria values herein specified.

Exception: Automatic, motion sensor–type lighting switches shall be permitted within the means of egress, provided that switch controllers are equipped for fail-safe operation, illumination timers are set for no less than a 15-minute duration, and the motion sensor is activated by any occupant movement in the area served by the lighting units.

5.8.1.3* The floors and other walking surfaces within an exit and within the portions of the exit access and exit discharge designated in 5.8.1.1 shall be illuminated to values of not less than 10 lux (1 ft-candle) measured at the floor.

--`,,`-`-`,,`,,`,`,,`---
Copyright National Fire Protection Association
Provided by IHS under license with NFPA
No reproduction or networking permitted without license from IHS
Not for Resale

Exception No. 1: In assembly occupancies, the illumination of the floors of exit access shall be at least 2 lux (0.2 ft-candle) during periods of performances or projections involving directed light.

Exception No. 2: This requirement shall not apply where operations or processes require low lighting levels.

5.8.1.4* Required illumination shall be arranged so that the failure of any single lighting unit will not result in an illumination level in any designated area of less than 2 lux (0.2 ft-candle).

5.8.1.5 The equipment or units installed to meet the requirements of Section 5.10 shall be permitted also to serve the function of illumination of means of egress, provided that all requirements of Section 5.8 for such illumination are met.

5.8.2 Sources of Illumination.

5.8.2.1* Illumination of means of egress shall be from a source considered reliable by the authority having jurisdiction.

5.8.2.2 Battery-operated electric lights and other types of portable lamps or lanterns shall not be used for primary illumination of means of egress. Battery-operated electric lights shall be permitted to be used as an emergency source to the extent permitted by Section 5.9.

5.9 Emergency Lighting and Standby Power.

5.9.1 General.

5.9.1.1* Emergency lighting facilities for means of egress shall be provided in accordance with this section for the following:

(1) Every building or structure where required in Table 5.9.1.1
(2) Except for one- and two-family dwellings, windowless and underground structures as defined in 3.3.103.4
(3) High-rise buildings as defined in 3.3.12.6
(4) At doors equipped with delayed egress locks
(5) The stair shaft and vestibule of smokeproof enclosures. A standby generator that is installed for the smokeproof enclosure mechanical ventilation equipment shall be permitted to be used for such stair shaft and vestibule power supply.

Exception No. 1: Towers shall be exempt from emergency lighting requirements under the following conditions:

(1) Where occupied by not more than three persons
(2) In locations not routinely inhabited by humans
(3) In structures occupied only during daylight hours, with windows arranged to provide the required level of illumination of all portions of the means of egress during these hours, upon approval of the authority having jurisdiction

Exception No. 2: Water-surrounded structures shall be exempt from emergency lighting in the following:

(1) Locations not routinely inhabited by humans
(2) In structures occupied only during daylight hours, with windows arranged to provide the required level of illumination of all portions of the means of egress during these hours, upon approval of the authority having jurisdiction

5.9.1.2 For the purposes of this requirement, exit access shall include only designated stairs, aisles, corridors, ramps, escalators, and passageways that lead to an exit. For the purposes of this requirement, exit discharge shall include only designated stairs, ramps, aisles, walkways, and escalators that lead to a public way.

5.9.1.3 Where maintenance of illumination depends on changing from one energy source to another, a delay of not more than 10 seconds shall be permitted.

5.9.2 Performance of System.

5.9.2.1* Emergency illumination shall be provided for a period of 1½ hours in the event of failure of normal lighting. Emergency lighting facilities shall be arranged to provide initial illumination that is not less than an average of 10 lux (1 ft-candle) and a minimum at any point of 1 lux (0.1 ft-candle), measured along the path of egress at floor level. Illumination levels shall be permitted to decline to an average of 6 lux (0.6 ft-candle) and a minimum at any point of 0.6 lux (0.06 ft-candle) at the end of the emergency lighting time duration. A maximum-to-minimum illumination uniformity ratio of 40 to 1 shall not be exceeded.

5.9.2.2* The emergency lighting system shall be arranged to provide the required illumination automatically in the event of any interruption of normal lighting, such as any failure of a public utility or other outside electrical power supply; the opening of a circuit breaker or fuse; or any manual act(s), including accidental opening of a switch controlling normal lighting facilities.

5.9.2.3 Emergency generators that provide power to emergency lighting systems shall be installed in accordance with NFPA 110, *Standard for Emergency and Standby Power Systems*. Stored electrical energy systems, where required in this *Code*, shall be installed in accordance with NFPA 111, *Standard on Stored Electrical Energy Emergency and Standby Power Systems*.

5.9.2.4* Battery-operated emergency lights shall use only reliable types of rechargeable batteries provided with suitable facilities for maintaining them in properly charged condition. Batteries used in such lights or units shall be approved for their intended use and shall comply with NFPA 70, *National Electrical Code*.

5.9.2.5 The emergency lighting system either shall be continuously in operation or shall be capable of repeated automatic operation without manual intervention.

5.9.3 Standby Power. High-rise buildings shall be provided with Class 1, Type 60 standby power in accordance with NFPA 70, *National Electrical Code*, and NFPA 110, *Standard for Emergency and Standby Power Systems*. The standby power system shall have a capacity and rating sufficient to supply all required equipment. Selective load pickup and load shedding shall be permitted in accordance with NFPA 70. The standby power system shall be connected to the following:

(1) Emergency lighting system
(2) At least one elevator serving all floors and transferable to any elevator
(3) Mechanical equipment for smokeproof enclosures

5.10 Marking of Means of Egress.

5.10.1 General.

5.10.1.1 Where Required. Means of egress shall be marked in accordance with this section for every building and structure except as exempted by Table 5.10.1.1.

Copyright National Fire Protection Association
Provided by IHS under license with NFPA
No reproduction or networking permitted without license from IHS
Not for Resale

Table 5.9.1.1 Emergency Lighting Requirements

Occupancy	Conditions	Exceptions
Assembly	—	Private party tents <111.5 m^2 (<1200 ft^2)
Educational	For interior stairs and corridors, assembly use spaces, flexible and open-plan areas, interior or windowless portions, shops and labs	
Day-care centers	For interior stairs and corridors, normally occupied spaces, flexible and open-plan areas, interior or windowless portions, shops and labs	Exempted from administrative areas, general classrooms, mechanical rooms, and storage rooms
Health care		
Hospital, nursing home, limited care	And supply the required power from life safety branch of electricals *(see NFPA 99, Standard for Health Care Facilities)* if using life-support systems	—
Ambulatory health care	And supply from the required power essential electrical system *(see NFPA 99, Standard for Health Care Facilities)* if using life-support systems for other than emergency purposes only	—
Detention and correctional	—	—
Residential		
Hotels and dormitories	>25 rooms	All rooms direct to grade
Apartment buildings	>12 units or >3 stories	All apartments direct to grade
Board and care, large	>25 rooms	All rooms direct to grade
Mercantile	>1 story or >280 m^2 (>3000 ft^2) gross sales area, and malls	—
Business	≥2 stories above LED, or ≥50 people above or below LED, or ≥300 people total	—
Industrial	—	Special purpose without routine occupancy, or daylight operations with windows
Storage	—	Not normally occupied, or daylight operations with windows

5.10.1.2* Exits. Exits, other than main exterior exit doors that obviously and clearly are identifiable as exits, shall be marked by an approved sign readily visible from any direction of exit access.

5.10.1.3 Exit Stair Door Tactile Signage. Tactile signage shall be located at each door into an exit stair enclosure, and such signage shall read as follows: EXIT. Signage shall comply with ICC/ANSI A117.1, *American National Standard for Accessible and Usable Buildings and Facilities,* and shall be installed adjacent to the latch side of the door 152 cm (60 in.) above the finished floor to the centerline of the sign.

5.10.1.4* Exit Access. Access to exits shall be marked by approved, readily visible signs in all cases where the exit or way to reach the exit is not readily apparent to the occupants. Sign placement shall be such that no point in an exit access corridor exceeds the rated viewing distance or 30 m (100 ft), whichever is less, from the nearest sign.

5.10.1.5* Floor Proximity Exit Signs. Where floor proximity exit signs are required elsewhere in this *Code*, signs shall be placed near the floor level in addition to those signs required for doors or corridors. These signs shall be illuminated in accordance with 5.10.5. Externally illuminated signs shall be sized in accordance with 5.10.6.1. The bottom of the sign shall be not less than 150 mm (6 in.) but not more than 205 mm (8 in.) above the floor. For exit doors, the sign shall be mounted on the door or adjacent to the door with the nearest edge of the sign within 10.2 cm (4 in.) of the door frame.

5.10.1.6* Floor Proximity Egress Path Marking. Where floor proximity egress path marking is required elsewhere in this *Code,* a listed and approved floor proximity egress path mark-

Copyright National Fire Protection Association
Provided by IHS under license with NFPA
No reproduction or networking permitted without license from IHS
Not for Resale

Table 5.10.1.1 Exit Marking Exceptions

Occupancy	Exceptions
Assembly	On seating side of vomitories from seating areas where exit marking is provided in the concourse and where such marking is readily apparent from the vomitories
Educational	Where locations of exits are otherwise obvious and familiar to occupants
Detention and Correctional	In residential housing areas
Residential	
1- and 2-family dwellings	All 1- and 2-family dwellings
Lodging or rooming houses	All lodging or rooming houses
Apartment buildings	Apartment buildings that require only one exit
Board and care, small	All small board and care facilities
Mercantile	Where an exit is immediately apparent from all portions of the sales area
Unusual Structures	
Towers	Where occupied by not more than three persons or not routinely inhabited by humans
Open structures	All open structures
Water-surrounded structures	Not routinely inhabited by humans

ing system that is internally illuminated shall be installed within 205 mm (8 in.) of the floor. The system shall provide a visible delineation of the path of travel along the designated exit access and shall be essentially continuous, except as interrupted by doorways, hallways, corridors, or other such architectural features. The system shall operate continuously or at any time the building fire alarm system is activated. The activation, duration, and continuity of operation of the system shall be in accordance with 5.9.2.

5.10.1.7* Visibility. Every sign required in Section 5.10 shall be located and of such size, distinctive color, and design that it is readily visible and shall provide contrast with decorations, interior finish, or other signs. No decorations, furnishings, or equipment that impairs visibility of a sign shall be permitted. No brightly illuminated sign (for other than exit purposes), display, or object in or near the line of vision of the required exit sign that could detract attention from the exit sign shall be permitted.

5.10.2* Directional Signs. A sign complying with 5.10.3 with a directional indicator showing the direction of travel shall be placed in every location where the direction of travel to reach the nearest exit is not apparent.

5.10.3* Sign Legend. Signs required by 5.10.1 and 5.10.2 shall have the word EXIT or other appropriate wording in plainly legible letters.

Exception: Where approved by the authority having jurisdiction, pictograms shall be permitted.

5.10.4* Power Source. Where emergency lighting facilities are required by 5.9.1.1, the signs, other than approved self-luminous signs and listed photoluminescent signs in accordance with 5.10.7.2, shall be illuminated by the emergency lighting facilities. The level of illumination of the signs shall be in accordance with 5.10.6.3 or 5.10.7 for the required emergency lighting duration as specified in 5.9.2.1. However, the level of illumination shall be permitted to decline to 60 percent at the end of the emergency lighting duration.

5.10.5 Illumination of Signs.

5.10.5.1 General. Every sign required by 5.10.1.2 or 5.10.1.4, other than where operations or processes require low lighting levels, shall be suitably illuminated by a reliable light source. Externally and internally illuminated signs shall be legible in both the normal and emergency lighting mode.

5.10.5.2* Continuous Illumination. Every sign required to be illuminated by 5.10.6.3 and 5.10.7 shall be continuously illuminated as required under the provisions of Section 5.8.

Exception: Illumination for signs shall be permitted to flash on and off upon activation of the fire alarm system.

5.10.6 Externally Illuminated Signs.

5.10.6.1* Size of Signs. Externally illuminated signs required by 5.10.1 and 5.10.2 shall have the word EXIT or other appropriate wording in plainly legible letters not less than 150 mm (6 in.) high, with the principal strokes of letters not less than 19 mm (¾ in.) wide. The word EXIT shall have letters of a width not less than 5 cm (2 in.), except the letter I, and the minimum spacing between letters shall be not less than 9.5 mm (⅜ in.). Signs larger than the minimum established in this paragraph shall have letter widths, strokes, and spacing in proportion to their height. *(See 7.2.33 for exemption to this requirement.)*

Exception No. 1: This requirement shall not apply to marking required by 5.10.1.3 and 5.10.1.5.

Exception No. 2: Where approved by the authority having jurisdiction, pictograms shall be permitted.

5.10.6.2* Size and Location of Directional Indicator. The directional indicator shall be located outside of the EXIT legend, not less than 9.5 mm (⅜ in.) from any letter. The directional indicator shall be of a chevron type, as shown in Figure 5.10.6.2. The directional indicator shall be identifiable as a directional indicator at a distance of 12 m (40 ft). A directional indicator larger than the minimum established in this paragraph shall be proportionately increased in height, width, and stroke. The directional indicator shall be located at the end of the sign for the direction indicated.



FIGURE 5.10.6.2 Chevron-Type Indicator.

Copyright National Fire Protection Association
Provided by IHS under license with NFPA
No reproduction or networking permitted without license from IHS
Not for Resale

5.10.6.3* Level of Illumination. Externally illuminated signs shall be illuminated by not less than 54 lux (5 ft-candles) at the illuminated surface and shall have a contrast ratio of not less than 0.5.

5.10.7 Internally Illuminated Signs.

5.10.7.1 Listing. Internally illuminated signs shall be listed in accordance with UL 924, *Standard for Safety Emergency Lighting and Power Equipment.*

Exception: This requirement shall not apply to signs that are in accordance with 5.10.1.3 and 5.10.1.6.

5.10.7.2* Photoluminescent Signs. The face of a photoluminescent sign shall be continually illuminated while the building is occupied. The illumination levels on the face of the photoluminescent sign shall be in accordance with its listing. The charging illumination shall be a reliable light source as determined by the authority having jurisdiction. The charging light source shall be of a type specified in the product markings.

5.10.8 Special Signs.

5.10.8.1* No Exit. Any door, passage, or stairway that is neither an exit nor a way of exit access and that is located or arranged so that it is likely to be mistaken for an exit shall be identified by a sign that reads as follows: NO EXIT. Such sign shall have the word NO in letters 5 cm (2 in.) high with a stroke width of 9.5 mm (⅜ in.) and the word EXIT in letters 2.5 cm (1 in.) high, with the word EXIT below the word NO.

5.10.8.2 Elevator Signs. Elevators that are a part of a means of egress *(see 5.2.13.1)* shall have the following signs, with minimum letter height of 16 mm (⅝ in.), in every elevator lobby:

(1)*Signs that indicate that the elevator can be used for egress, including any restrictions on use
(2)*Signs that indicate the operational status of elevators

5.11 Special Provisions for Occupancies with High-Hazard Contents. See Section 4.2.

5.11.1* Where the contents are classified as high hazard, exits of such types and numbers shall be provided and arranged to permit all occupants to escape from the building or structure or from the hazardous area thereof to the outside or to a place of safety with a travel distance of not more than 23 m (75 ft), measured as required in 5.6.2.

Exception: A travel distance of not more than 45 m (150 ft) shall be permitted where flammable and combustible products are stored and protected in accordance with NFPA 30, Flammable and Combustible Liquids Code.

5.11.2 Egress capacity for high-hazard contents areas shall be based on 18 mm per person (0.7 in. per person) for stairs or 10 mm per person (0.4 in. per person) for level components and ramps in accordance with 5.3.3.1.

5.11.3 At least two means of egress shall be provided from each building or hazardous area thereof.

Exception: Rooms or spaces not more than 18.6 m^2 (200 ft^2) and having an occupant load of not more than three persons and a travel distance to the room door of not more than 7620 mm (300 in.).

5.11.4 Means of egress shall be arranged so that there are no dead ends in corridors.

Exception: Spaces meeting the requirements of the Exception to 5.11.3.

5.11.5 Doors that serve high-hazard contents areas with occupant loads of more than five shall be permitted to be provided with a latch or lock only if it is panic hardware or fire exit hardware that complies with 5.2.1.7.

5.12 Mechanical Equipment Rooms, Boiler Rooms, and Furnace Rooms.

5.12.1 Mechanical equipment rooms, boiler rooms, furnace rooms, and similar spaces shall be arranged to limit common path of travel to not more than 15 m (50 ft).

Exception: A common path of travel not more than 30 m (100 ft) shall be permitted in either of the following:

(1) In buildings protected throughout by an approved, supervised automatic sprinkler system
(2) In mechanical equipment rooms with no fuel-fired equipment

5.12.2 Stories used exclusively for mechanical equipment, furnaces, or boilers shall be permitted to have a single means of egress where the travel distance to an exit on that story is not more than the common path of travel limitations of 5.12.1.

5.13 Subdivision of Building Space via Smoke Partitions.

5.13.1 Where required elsewhere in this *Code*, smoke partitions shall be provided to limit the transfer of smoke.

5.13.2* Smoke partitions shall extend from the floor to the underside of the floor or roof deck above, through any concealed spaces, such as those above suspended ceilings, and through interstitial structural and mechanical spaces.

Exception: Smoke partitions shall be permitted to terminate at the underside of a monolithic or suspended ceiling system where the following conditions are met:

(1) The ceiling system forms a continuous membrane.
(2) A smoketight joint is provided between the top of the smoke partition and the bottom of the suspended ceiling.
(3) The space above the ceiling is not used as a plenum.

5.13.3 Doors.

5.13.3.1 Doors in smoke partitions shall comply with 5.13.3.2 through 5.13.3.5.

5.13.3.2 Doors shall comply with the provisions of 5.2.1.

5.13.3.3 Doors shall not include louvers.

5.13.3.4* Door clearances shall be in accordance with NFPA 80, *Standard for Fire Doors and Fire Windows.*

5.13.3.5 Doors shall be self-closing or automatic-closing in accordance with 5.2.1.8.

5.13.4 Penetrations and Miscellaneous Openings in Smoke Partitions.

5.13.4.1 Pipes, conduits, bus ducts, cables, wires, air ducts, pneumatic tubes and ducts, and similar building service equipment that pass through smoke partitions shall be protected as follows:

(1) The space between the penetrating item and the smoke partition shall meet one of the following conditions:
  (a) It shall be filled with a material that is capable of limiting the transfer of smoke.
  (b) It shall be protected by an approved device that is designed for the specific purpose.

--`,,`-`-`,,`,,`,`,,`---

Copyright National Fire Protection Association
Provided by IHS under license with NFPA
No reproduction or networking permitted without license from IHS
Not for Resale

(2) Where the penetrating item uses a sleeve to penetrate the smoke partition, the sleeve shall be solidly set in the smoke partition, and the space between the item and the sleeve shall meet one of the following conditions:
   (a) It shall be filled with a material that is capable of limiting the transfer of smoke.
   (b) It shall be protected by an approved device that is designed for the specific purpose.
(3) Where designs take transmission of vibrations into consideration, any vibration isolation shall meet one of the following conditions:
   (a) It shall be made on either side of the smoke partitions.
   (b) It shall be made by an approved device that is designed for the specific purpose.

5.13.4.2 Openings located at points where smoke partitions meet the outside walls, other smoke partitions, smoke barriers, or fire barriers of a building shall meet one of the following conditions:

(1) They shall be filled with a material that is capable of limiting the transfer of smoke.
(2) They shall be made by an approved device that is designed for the specific purpose.

5.13.4.3* Air transfer openings in smoke partitions shall be provided with approved dampers designed to limit the transfer of smoke. Dampers in air transfer openings shall close upon detection of smoke by approved smoke detectors installed in accordance with *NFPA 72, National Fire Alarm Code*.

5.14 Subdivision of Building Space via Smoke Barriers.

5.14.1 Health Care Occupancies.

5.14.1.1 Buildings containing health care facilities shall be subdivided by smoke barriers in accordance with (A) through (D).

(A) Smoke barriers shall be used to divide every story used by inpatients for sleeping or for treatment into at least two smoke compartments.

(B) Smoke barriers shall be used to divide every story having an occupant load of 50 or more persons, regardless of use, into at least two smoke compartments.

(C) Smoke barriers shall limit the size of each smoke compartment required by (A) and (B) to an area not exceeding 2100 m^2 (22,500 ft^2).

Exception: The area of an atrium shall not be limited in size.

(D) Smoke barriers shall be used to limit the travel distance from any point to reach a door in the required smoke barrier to 60 m (200 ft).

Exception No. 1: Stories that do not contain a health care occupancy, located totally above the health care occupancy.

Exception No. 2: Areas that do not contain a health care occupancy and that are separated from the health care occupancy by a fire barrier that complies with 5.2.4.2.

Exception No. 3: Stories that do not contain health care occupancies and that are more than one story below the health care occupancy.

Exception No. 4: Open-air parking structures protected throughout by an approved, supervised automatic sprinkler system.

5.14.1.2 Smoke barriers shall be provided on stories that are usable but unoccupied.

5.14.1.3* Any required smoke barrier shall have a fire resistance rating of not less than 1 hour.

Exception No. 1: Where an atrium is used, smoke barriers shall be permitted to terminate at an atrium wall. A minimum of two separate smoke compartments shall be provided on each floor.

Exception No. 2: Dampers shall not be required in duct penetrations of smoke barriers in fully ducted heating, ventilating, and air-conditioning systems.

5.14.1.4 Not less than 2.8 net m^2 (30 net ft^2) per patient in a hospital or nursing home or 1.4 net m^2 (15 net ft^2) per resident in a limited care facility shall be provided within the aggregate area of corridors, patient rooms, treatment rooms, lounge or dining areas, and other low-hazard areas on each side of the smoke barrier. On stories not housing bed or litter patients, no less than 0.56 net m^2 (6 net ft^2) per occupant shall be provided on each side of the smoke barrier for the total number of occupants in adjoining compartments.

5.14.1.5* Doors in smoke barriers shall be substantial doors, such as 44 mm (1¾-in.) thick, solid bonded wood core, or of construction that will resist fire for no less than 20 minutes. Nonrated factory- or field-applied protective plates extending not more than 1220 mm (48 in.) above the bottom of the door shall be permitted. Cross-corridor openings in smoke barriers shall be protected by a pair of swinging doors or a horizontal sliding door that complies with 5.2.1.14. Swinging doors shall be arranged so that each door swings in a direction opposite from the other.

5.14.1.5.1 The minimum clear width for swinging doors shall be as follows:

(1) Hospitals and nursing homes — 1055 mm (41.5 in.)
(2) Psychiatric hospitals and limited care facilities — 810 mm (32 in.)

5.14.1.5.2 The minimum clear width opening for horizontal sliding doors shall be as follows:

(1) Hospitals and nursing homes — 2110 mm (83 in.)
(2) Psychiatric hospitals and limited care facilities — 1625 mm (64 in.)

5.14.1.6* Doors in smoke barriers shall be self-closing or automatic-closing in accordance with 5.2.1.8.

5.14.1.7* Vision panels that consist of fire-rated glazing or wired glass panels in approved frames shall be provided in each cross-corridor swinging door and at each cross-corridor horizontal sliding door in a smoke barrier.

5.14.1.8 Rabbets, bevels, or astragals shall be required at the meeting edges, and stops shall be required at the head and sides of door frames in smoke barriers. Positive latching hardware shall not be required. Center mullions shall be prohibited.

5.14.2 Ambulatory Health Care Facilities.

5.14.2.1 The ambulatory health care facility shall be divided into no less than two smoke compartments on patient treatment floors.

Exception No. 1: Facilities of less than 465 m^2 (5000 ft^2) and protected by an approved, automatic smoke detection system.

Copyright National Fire Protection Association
Provided by IHS under license with NFPA
No reproduction or networking permitted without license from IHS
Not for Resale

Exception No. 2: Facilities of less than 930 m² (10,000 ft²) and protected throughout by an approved, supervised automatic sprinkler system.

Exception No. 3: An area in an adjoining occupancy shall be permitted to serve as a smoke compartment for the ambulatory health care facility if the following criteria are met:

(1) The separating wall and both compartments meet the requirements of 5.14.2.
(2) The ambulatory health care facility is less than 2100 m² (22,500 ft²)
(3) Access from the ambulatory health care facility to the other occupancy is unrestricted.

5.14.2.2 Any required smoke barrier shall have a fire resistance rating of at least 1 hour.

Exception: Dampers shall not be required in duct penetrations of smoke barriers in fully ducted heating, ventilating, and air-conditioning systems for buildings protected throughout by an approved, supervised automatic sprinkler system.

5.14.2.3 Vision panels in the smoke barrier shall be of fixed fire window assemblies.

5.14.2.4 At least 1.4 net m² (15 net ft²) per ambulatory health care facility occupant shall be provided within the aggregate area of corridors, patient rooms, treatment rooms, lounges, and other low-hazard areas on each side of the smoke compartment for the total number of occupants in adjoining compartments. Smoke barriers shall be provided to limit the size of each smoke compartment to an area not exceeding 2100 m² (22,500 ft²) and to limit the travel distance from any point to reach a door in the required smoke barrier to 60 m (200 ft).

Exception: The area of an atrium shall not be limited in size.

5.14.2.5* Doors in smoke barriers shall be at least 44-mm (1¾-in.) thick, solid bonded wood core or the equivalent and shall be self-closing. A vision panel shall be required.

5.14.2.6 Doors in smoke barriers shall normally be kept closed, or, if held open, they shall be equipped with automatic devices that release the doors upon activation of the following:

(1) The fire alarm system, and either
(2) A local smoke detector, or
(3) A complete automatic fire-extinguishing system or complete automatic fire detection system

5.14.3 Detention and Correctional Occupancies.

5.14.3.1* Smoke barriers shall be provided to divide every story used for sleeping by residents, or any other story having an occupant load of 50 or more persons, into a minimum of two compartments.

Exception No. 1: Protection shall be permitted to be accomplished with horizontal exits. (See 5.2.4.)

Exception No. 2: The requirement for subdivision of building space shall be permitted to be fulfilled by one of the following: (1), (2), or (3). Doors used to access the areas specified in (1), (2), and (3) of this exception shall meet the requirements for doors at smoke barriers for the applicable use condition.

(1) Smoke compartments having exit to a public way where such exit serves only one area and has no openings to other areas
(2) A building separated from the resident housing area by a 2-hour fire resistance rating or 15 m (50 ft) of open space
(3) A secured, open area having a holding space located 15 m (50 ft) from the housing area that provides 1.4 m² (15 ft²) or more of refuge area for each person (resident, staff, visitors) potentially present at the time of a fire.

5.14.3.2 Where smoke barriers are required by 5.14.3.1, smoke barriers shall be provided to limit the following:

(1) The housing not to exceed 200 residents in any smoke compartment
(2) The travel distance to a door in a smoke barrier as follows:
  (a) From any room door required as exit access to a maximum of 45 m (150 ft)
  (b) From any point in a room to a maximum of 60 m (200 ft) *(See 7.2.34 for exemption to this requirement.)*

5.14.3.3* Any required smoke barrier shall be of substantial construction and shall have structural fire resistance.

5.14.3.4* Openings in smoke barriers shall be protected.

Exception No. 1: There shall be no restriction on the total number of vision panels in any barrier.

Exception No. 2: Sliding doors in smoke barriers that are designed to normally be kept closed and are remotely operated from a continuously attended location shall not be required to be self-closing.

5.14.3.5 Not less than 0.56 net m² (6 net ft²) per occupant shall be provided on each side of the smoke barrier for the total number of occupants in adjoining compartments. This space shall be readily available wherever occupants are moved across the smoke barrier in a fire emergency.

5.14.3.6 Doors shall provide resistance to the passage of smoke. Swinging doors shall be self-latching, or the opening resistance of the door shall be a minimum of 22 N (5 lbf).

5.14.3.7 Doors in smoke barriers shall conform with the requirements for doors in means of egress and shall have locking and release arrangements according to the applicable use condition. The provisions of the Exception to 5.2.1.6.3.2 shall not be used for smoke barrier doors that serve a smoke compartment containing more than 20 persons.

5.14.3.8 Vision panels shall be provided in smoke barriers at points where the barrier crosses an exit access corridor.

5.14.3.9 Smoke dampers shall be provided.

Exception: Other arrangements and positioning of smoke detectors shall be permitted to prevent damage or tampering or to be used for other purposes, provided the function of detecting any fire is fulfilled and the placement of detectors is such that the speed of detection shall be equivalent to that provided by the required spacing and arrangement.

5.14.3.10 Smoke Venting. (Reserved)

5.14.4 Educational Occupancies.

5.14.4.1 School buildings shall be subdivided into compartments by smoke barriers having a 1-hour fire resistance rating where one or both of the following conditions exist: (1) The maximum area of a compartment, including the aggregate area of all floors having a common atmosphere, exceeds 2800 m² (30,000 ft²). (2) The length or width of the building exceeds 91 m (300 ft).

Exception No. 1: This requirement shall not apply where all spaces normally subject to student occupancy have not less than one door opening directly to the outside or to an exterior or exit access balcony or corridor in accordance with 5.5.3.

Copyright National Fire Protection Association
Provided by IHS under license with NFPA
No reproduction or networking permitted without license from IHS
Not for Resale

Exception No. 2: This requirement shall not apply to buildings that consist of only one story and are protected throughout by an approved, supervised automatic sprinkler system.

5.14.4.2 The area of a smoke compartment shall not exceed 2800 m^2 (30,000 ft^2), with no dimension exceeding 91 m (300 ft).

Exception: In buildings protected throughout by an approved, supervised automatic sprinkler system, there shall be no limitation on smoke compartment size, provided that the floor is divided into not less than two smoke compartments.

5.15 Special Provisions for Assembly Occupancy Seating.

5.15.1 Seating Arranged in Rows. Minimum clear widths of aisles and other means of egress serving theater-type seating, or similar seating arranged in rows, shall be in accordance with Table 5.15.1. The minimum clear widths shown shall be modified in accordance with all of the following:

(1) If risers exceed 178 mm in height, multiply the stair width in the table by factor *A*, where

$$A = 1 + \frac{\text{riser height} - 178}{125}$$

(2) If risers exceed 7 in. in height, multiply the stair width in the table by factor *A*, where

$$A = 1 + \frac{\text{riser height} - 7}{5}$$

(3) Stairs not having a handrail within a 760-mm (30-in.) horizontal distance shall be 25 percent wider than otherwise calculated; that is, multiply by factor *B*, which equals 1.25.
(4) Ramps steeper than 1 in 10 slope where used in ascent shall have their width increased by 10 percent; that is, multiply by factor *C*, which equals 1.10.

Table 5.15.1 Capacity Factors for Assembly Occupancy Seating

	Clear Width per Seat Served			
	Stairs		Passageways, Ramps, and Doorways	
No. of Seats	mm	in.	mm	in.
Unlimited	7.6 *AB*	0.3 *AB*	5.6 *C*	0.22 *C*

Exception No. 1: Lighting and access catwalks.

Exception No. 2: Grandstands, bleachers, and folding and telescopic seating.

5.15.2 General Requirements for Access and Egress Routes Within Assembly Areas.

5.15.2.1 Festival seating shall be prohibited within a building. *(See 3.3.88.1, Festival Seating.)*

Exception No. 1: Festival seating shall be permitted in assembly occupancies with occupant loads not exceeding 1000.

Exception No. 2: Festival seating shall be permitted in assembly occupancies with occupant loads exceeding 1000 with an approved life safety evaluation. (See 5.15.9.)

5.15.2.2* The width of aisle accessways and aisles shall provide sufficient egress capacity for the number of persons accommodated by the catchment area served by the aisle accessway or aisle. Where aisle accessways or aisles converge to form a single path of egress travel, the required egress capacity of that path shall not be less than the combined required capacity of the converging aisle accessways and aisles.

5.15.2.3 Those portions of aisle accessways and aisles where egress is possible in either of two directions shall be uniform in required width.

Exception: Those portions of aisle accessways where the required width, not including the seat space described by 5.15.5.2, does not exceed 305 mm (12 in.).

5.15.2.4 In the case of side boundaries, other than nonfixed seating at tables, for aisle accessways or aisles, the clear width shall be measured to boundary elements such as walls, guardrails, handrails, edges of seating, tables, and side edges of treads, with the measurement made horizontally to the vertical projection of the elements resulting in the smallest width measured perpendicularly to the line of travel.

5.15.3* Aisle Accessways Serving Seating Not at Tables.

5.15.3.1* To determine the required clear width of aisle accessways between rows of seating, horizontal measurements shall be made (between vertical planes) from the back of one seat to the front of the most forward projection of the seat immediately behind it. Where the entire row consists of automatic or self-rising seats that comply with ASTM F 851, *Standard Test Method for Self-Rising Seat Mechanisms*, the measurement shall be permitted to be made with the seats in the up position.

5.15.3.2 The aisle accessway between rows of seating shall have a clear width of not less than 305 mm (12 in.), and this minimum shall be increased as a function of row length in accordance with 5.15.3.3 and 5.15.3.4.

Exception No. 1: If used by not more than four persons, there shall be no minimum clear width requirement for the portion of the aisle accessway that has a length not exceeding 1830 mm (72 in.), measured from the center of the seat farthest from the aisle.

Exception No. 2: The maximum number of seats permitted between the farthest seat in an aisle in grandstands, bleachers, and folding and telescopic seating shall not exceed that shown in Table 5.15.3.2 Exception No. 2.

Table 5.15.3.2 Exception No. 2 Maximum Number of Seats Permitted Between Farthest Seat and an Aisle

Application	*Outdoors*	*Indoors*
Grandstands	*11*	*6*
Bleachers (see 5.15.4.1, Exception No. 1)	*20*	*9*

5.15.3.3* Rows of seating served by aisles or doorways at both ends shall have no more than 100 seats per row. The 305-mm (12-in.) minimum clear width of aisle accessway between such rows shall be increased by 7.6 mm (0.3 in.) for every seat over a total of 14 but shall not be required to exceed 560 mm (22 in.).

Exception: Smoke-protected assembly seating as permitted by 5.15.10.4.

Copyright National Fire Protection Association
Provided by IHS under license with NFPA
No reproduction or networking permitted without license from IHS
Not for Resale

5.15.3.4 Rows of seating served by an aisle or doorway at one end only shall have a path of travel not exceeding 9140 mm (360 in.) in length from any seat to an aisle. The 305 mm (12 in.) minimum clear width of aisle accessway between such rows shall be increased by 15 mm (0.6 in.) for every seat over a total of seven.

Exception: Smoke-protected assembly seating as permitted by 5.15.10.5 and 5.15.10.6.

5.15.3.5 Rows of seating utilizing tablet-arm chairs shall be permitted only if the clear width of aisle accessways complies with the requirements of 5.15.3 where the tablet is in the usable position.

Exception: Tablet arms shall be permitted to be measured in the stored position where the tablet arm automatically returns to the stored position when raised manually to a vertical position in one motion and falls to the stored position by force of gravity.

5.15.3.6 The depth of seat boards shall not be less than 230 mm (9 in.) where the same level is not used for both seat boards and footboards. Footboards, independent of seats, shall be provided such that there is no horizontal opening permitting the passage of a 13-mm (½-in.) diameter sphere.

5.15.4 Aisles Serving Seating Not at Tables.

5.15.4.1 Aisles shall be provided so that the number of seats served by the nearest aisle is in accordance with 5.15.3.2 through 5.15.3.4.

Exception No. 1: Aisles shall not be required in bleachers if all of the following conditions are met:

(1) Egress from the front row is not obstructed by a rail, guard, or other obstruction.
(2) Row spacing is 710 mm (28 in.) or less.
(3) The rise per row, including the first row, is 150 mm (6 in.) or less.
(4) The number of rows does not exceed 16.
(5) Seat spaces are not physically defined.
(6) Seat boards that are also used as stepping surfaces for descent shall provide a walking surface with a minimum width of 305 mm (12 in.), and, where there is a depressed footboard, the gap between seat boards of adjacent rows shall not exceed 305 mm (12 in.) measured horizontally. Leading edges of such surfaces shall be provided with a contrasting marking stripe so that the location of such leading edge is readily apparent, particularly where viewed in descent. Such stripe shall be at least 25 mm (1 in.) wide and shall not exceed 51 mm (2 in.) in width. The marking stripe shall not be required where bleacher surfaces and environmental conditions under all conditions of use are such that the location of each leading edge is readily apparent, particularly when viewed in descent.

Exception No. 2: In seating composed entirely of bleachers, in which the row-to-row dimension is 710 mm (28 in.) or less, and from which front egress is not limited, aisles shall not be required to be more than 1675 mm (66 in.) in width. Such aisles shall not be considered as dead-end aisles.

5.15.4.2 Dead-end aisles shall not exceed 6100 mm (240 in.) in length.

Exception No. 1: A longer dead-end aisle shall be permitted where seats served by the dead-end aisle are not more than 24 seats from another aisle, measured along a row of seats having a minimum clear width of not less than 305 mm (12 in.) plus 15 mm (0.6 in.) for each additional seat over a total of 7 in the row.

Exception No. 2: A 16-row, dead-end aisle shall be permitted in folding and telescopic seating and grandstands.

5.15.4.3 The minimum clear width of aisles shall be sufficient to provide egress capacity in accordance with 5.15.1 but shall be not less than the following:

(1) 1220 mm (48 in.) for stairs having seating on each side, or 915 mm (36 in.) where the aisle does not serve more than 50 seats
(2) 915 mm (36 in.) for stairs having seating on only one side
(3) 585 mm (23 in.) between a handrail and seating or a guardrail where the aisle is subdivided by a handrail
(4) 1065 mm (42 in.) for level or ramped aisles having seating on both sides, or 915 mm (36 in.) where the aisle does not serve more than 50 seats
(5) 915 mm (36 in.) for level or ramped aisles having seating on only one side
(6) 585 mm (23 in.) between a handrail or guardrail and seating where the aisle does not serve more than five rows on one side

5.15.4.4* Aisle Stairs and Ramps. Aisles that have a gradient steeper than 1 in 20 but not steeper than 1 in 8 shall consist of a ramp. Aisles that have a gradient steeper than 1 in 8 shall consist of an aisle stair. The exception to 5.15.4.8 shall not apply.

Exception: Aisles in folding and telescopic seating shall be permitted to be by stepped aisles.

5.15.4.5 Aisle Stair Treads.

5.15.4.5.1 There shall be no variation exceeding 4.8 mm (3⁄16 in.) in the depth of adjacent treads.

5.15.4.5.2* Treads shall be a minimum of 280 mm (11 in.).

5.15.4.5.3 All treads shall extend the full width of the aisle.

5.15.4.6 Aisle Stair Risers.

5.15.4.6.1 Riser heights shall be a minimum of 100 mm (4 in.).

Exception: The riser height of aisle stairs in folding and telescopic seating shall be permitted to be not less than 90 mm (3½ in.) and not greater than 280 mm (11 in.).

5.15.4.6.2 Riser heights shall not exceed 205 mm (8 in.).

Exception No. 1: Where the gradient of an aisle is steeper than 205 mm (8 in.) in rise in 280 mm (11 in.) of run (to maintain necessary sight lines in the adjoining seating area), the riser height shall be permitted to exceed 205 mm (8 in.) but shall not exceed 230 mm (9 in.).

Exception No. 2: The riser height of aisle stairs in folding and telescopic seating shall be permitted to be not less than 90 mm (3½ in.) and not greater than 280 mm (11 in.).

5.15.4.6.3 Riser heights shall be designed to be uniform in each aisle, and the construction-caused nonuniformities shall not exceed 4.8 mm (3⁄16 in.) between adjacent risers.

Exception: Riser height shall be permitted to be nonuniform only for the purpose of accommodating necessary changes in gradient to maintain necessary sight lines within a seating area and shall be permitted to exceed 4.8 mm (3⁄16 in.) in any flight. Where nonuniformities exceed 4.8 mm (3⁄16 in.) between adjacent risers, the exact location of such nonuniformities shall be indicated by a distinctive marking stripe on each tread at the nosing or leading edge adjacent to the nonuniform risers.

Copyright National Fire Protection Association
Provided by IHS under license with NFPA
No reproduction or networking permitted without license from IHS
Not for Resale

5.15.4.7* Aisle Handrails.

5.15.4.7.1 Ramped aisles that have a gradient exceeding 1 in 12 and aisle stairs shall be provided with handrails at one side or along the centerline in accordance with 5.2.2.4.5.1, 5.2.2.4.5.2, and 5.2.2.4.5.3.

5.15.4.7.2 Where there is seating on both sides of the aisle, the handrails required by 5.15.4.7.1 shall be discontinuous with gaps or breaks at intervals not exceeding five rows to facilitate access to seating and to permit crossing from one side of the aisle to the other. These gaps or breaks shall have a clear width of not less than 560 mm (22 in.) and not greater than 915 mm (36 in.) measured horizontally, and the handrail shall have rounded terminations or bends. Where handrails are provided in the middle of aisle stairs, there shall be an additional intermediate rail located approximately 305 mm (12 in.) below the main handrail.

Exception No. 1: Handrails shall not be required for ramped aisles that have a gradient not steeper than 1 in 8 and have seating on both sides.

Exception No. 2: The requirement for a handrail shall be permitted to be satisfied by the use of a guard providing a rail that complies with the graspability requirements for handrails and is located at a consistent height between 865 mm (34 in.) and 1065 mm (42 in.), measured vertically from the top of the rail to the leading edge (nosing) of stair treads or to the adjacent walking surface in the case of a ramp.

5.15.4.8* Aisle Marking. A contrasting marking stripe shall be provided on each tread at the nosing or leading edge such that the location of such tread is readily apparent, particularly when viewed in descent. Such stripes shall be not less than 25 mm (1 in.) wide and shall not exceed 51 mm (2 in.) in width.

Exception: The marking stripe shall not be required where tread surfaces and environmental conditions under all conditions of use are such that the location of each tread is readily apparent, particularly when viewed in descent.

5.15.5* Aisle Accessways Serving Seating at Tables.

5.15.5.1* The minimum required clear width of an aisle accessway shall be 305 mm (12 in.) where measured in accordance with 5.15.5.2 and increased as a function of length in accordance with 5.15.5.3.

Exception: Where used by not more than four persons, there shall be no minimum clear width requirement for the portion of aisle accessway having a length not exceeding 1830 mm (72 in.) and located farthest from an aisle.

5.15.5.2* Where nonfixed seating is located between a table and an aisle accessway, the measurement of required clear width of the aisle accessway shall be made to a line 485 mm (19 in.) away from the edge of the table. The 485-mm (19-in.) distance shall be measured perpendicularly to the edge of the table.

5.15.5.3* The minimum required clear width of an aisle accessway shall be increased beyond the 305-mm (12-in.) requirement by 13 mm (0.5 in.) for each additional 305 mm (12 in.) or fraction thereof beyond 3660 mm (144 in.) of aisle accessway length where measured from the center of the seat farthest from an aisle.

5.15.5.4 The path of travel along the aisle accessway shall not exceed 11 m (36 ft) from any seat to the closest aisle or egress doorway.

5.15.6 Aisles Serving Seating at Tables.

5.15.6.1* Aisles that contain steps or that are ramped, such as the aisles serving dinner theater–style configurations, shall comply with the requirements of 5.15.4.

5.15.6.2* Aisles that serve seating at tables shall be no less than 1120 mm (44 in.) wide where serving an occupant load greater than 50 and 915 mm (36 in.) where serving an occupant load of 50 or fewer.

5.15.6.3* Where nonfixed seating is located between a table and an aisle, the measurement of required clear width of the aisle shall be made to a line 485 mm (19 in.) away from the edge of the table, measured perpendicularly to the edge of the table.

5.15.7 Approval of Layouts. Where required by the authority having jurisdiction, plans drawn to scale showing the arrangement of furnishings or equipment shall be submitted to the authority by the building owner, manager, or authorized agent to substantiate conformance with the provisions of this section and shall constitute the only acceptable arrangement until revised or additional plans are submitted and approved.

Exception: Temporary deviations from the specifications of the approved plans shall be permitted, provided the occupant load is not increased and the intent of this section is maintained.

5.15.8 Guards and Railings.

5.15.8.1* Sightline-Constrained Rail Heights. Unless subject to the requirements of 5.15.8.2, a fascia or railing system that complies with the guard requirements of 5.2.2.4 and has a height not less than 660 mm (26 in.) shall be provided where the floor or footboard elevation is more than 760 mm (30 in.) above the floor or grade below and the fascia or railing system would otherwise interfere with sightlines of immediately adjacent seating.

5.15.8.2 At Foot of Aisles. A fascia or railing system that complies with the guard requirements of 5.2.2.4 shall be provided for the full width of the aisle where the foot of the aisle is more than 760 mm (30 in.) above the floor or grade below. The fascia or railing shall be not less than 915 mm (36 in.) high and shall provide not less than 1065 mm (42 in.) measured diagonally between the top of the rail and the nosing of the nearest tread.

5.15.8.3 At Cross Aisles.

5.15.8.3.1 Cross aisles located behind seating rows shall be provided with railings not less than 660 mm (26 in.) above the adjacent floor.

Exception: Where the backs of seats located at the front of the aisle project 610 mm (24 in.) or more above the adjacent floor of the aisle.

5.15.8.3.2 Where cross aisles are more than 760 mm (30 in.) above the floor or grade below, guards shall be provided in accordance with 5.2.2.4.

5.15.8.4 At Side and Back of Seating Areas. Guards that comply with the guard requirements of 5.2.2.4 shall be provided with a height not less than 1065 mm (42 in.) above the aisle, aisle accessway, or footboard where the floor elevation is more than 760 mm (30 in.) above the floor or grade to the side or back of seating.

5.15.8.5 Below Seating. Openings between footboards and seat boards shall be provided with intermediate construction

Copyright National Fire Protection Association
Provided by IHS under license with NFPA
No reproduction or networking permitted without license from IHS
Not for Resale

so that a 100-mm (4-in.) diameter sphere cannot pass through the opening.

5.15.8.6 Locations Not Requiring Guards.

5.15.8.6.1 Guards shall not be required on the audience side of stages, of raised platforms, and of other raised floor areas such as runways, ramps, and side stages used for entertainment or presentations.

5.15.8.6.2 Permanent guards shall not be required at vertical openings in the performance area of stages.

5.15.8.6.3 Guards shall not be required where the side of an elevated walking surface is required to be open for the normal functioning of special lighting or for access and use of other special equipment.

5.15.9 Life Safety Evaluation.

5.15.9.1* Where a life safety evaluation is required by other provisions of the *Code*, it shall be done by persons acceptable to the authority having jurisdiction. The life safety evaluation shall include a written assessment of safety measures for conditions listed in 5.15.9.2. The life safety evaluation shall be approved annually by the authority having jurisdiction and shall be updated for special or unusual conditions.

5.15.9.2 Life safety evaluations shall include an assessment of the following conditions and the related appropriate safety measures:

(1) Nature of the events and the participants and attendees
(2) Access and egress movement, including crowd density problems
(3) Medical emergencies
(4) Fire hazards
(5) Permanent and temporary structural systems
(6) Severe weather conditions
(7) Earthquakes
(8) Civil or other disturbances
(9) Hazardous materials incidents within and near the facility
(10) Relationships among facility management, event participants, emergency response agencies, and others having a role in the events accommodated in the facility

5.15.9.3* Life safety evaluations shall include assessments of both building systems and management features upon which reliance is placed for the safety of facility occupants. Such assessments shall consider scenarios appropriate to the facility.

5.15.10* Smoke-Protected Assembly Seating.

5.15.10.1 Fire Protection Requirements. To be considered smoke protected, an assembly seating facility shall comply with (A) and (B).

(A)* All enclosed areas with walls and ceilings in buildings or structures containing smoke-protected assembly seating shall be protected with an approved, automatic sprinkler system.

Exception No. 1: The floor area used for the contest, performance, or entertainment, provided the roof construction is more than 15 m (50 ft) above the floor level and use is restricted to low fire hazard uses.

Exception No. 2: Sprinklers shall be permitted to be omitted over the floor area used for contest, performance, or entertainment and over the seating areas, if an approved engineering analysis substantiates the ineffectiveness of the sprinkler protection due to building height and combustible loading.

(B) All means of egress serving a smoke-protected assembly seating area shall be provided with smoke-actuated ventilation facilities or natural ventilation designed to maintain the level of smoke not less than 1830 mm (72 in.) above the floor of the means of egress.

5.15.10.2 Life Safety Evaluation. For facilities to utilize the provisions of smoke-protected assembly seating, a life safety evaluation shall be done in accordance with 5.15.9.

5.15.10.3 Using Table 5.15.10.3, the number of seats specified shall be within a single assembly space, and interpolation shall be permitted between the specific values shown. The minimum clear widths shown shall be modified in accordance with all of the following:

(1) If risers exceed 178 mm in height, multiply the stair width in the table by factor *A*, where

$$A = 1 + \frac{\text{riser height} - 178}{125}$$

(2) If risers exceed 7 in. in height, multiply the stair width in the table by factor *A*, where

$$A = 1 + \frac{\text{riser height} - 7}{5}$$

(3) Stairs not having a handrail within a 760-mm (30-in.) horizontal distance shall be 25 percent wider than otherwise calculated; that is, multiply by factor *B*, which equals 1.25.
(4) Ramps steeper than a 1 in 10 slope where used in ascent shall have their width increased by 10 percent; that is, multiply by factor *C*, which equals 1.10.

Table 5.15.10.3 Capacity Factors for Smoke-Protected Seating

Number of Seats	Clear Width per Seat Served			
	Stairs		Passageways, Ramps, and Doorways	
	mm	in.	mm	in.
2,000	7.6 *AB*	0.300 *AB*	5.6 *C*	0.220 *C*
5,000	5.1 *AB*	0.200 *AB*	3.8 *C*	0.150 *C*
10,000	3.3 *AB*	0.130 *AB*	2.5 *C*	0.100 *C*
15,000	2.4 *AB*	0.096 *AB*	1.8 *C*	0.070 *C*
20,000	1.9 *AB*	0.076 *AB*	1.4 *C*	0.056 *C*
25,000 or more	1.5 *AB*	0.060 *AB*	1.1 *C*	0.044 *C*

5.15.10.4 With smoke-protected assembly seating for rows of seats served by aisles or doorways at both ends, there shall be not more than 100 seats per row and the minimum clear width of 305 mm (12 in.) for aisle accessways shall be increased by 7.6 mm (0.3 in.) for every additional seat beyond the number stipulated in Table 5.15.10.4, but the minimum clear width shall not be required to exceed 560 mm (22 in.).

Copyright National Fire Protection Association
Provided by IHS under license with NFPA
No reproduction or networking permitted without license from IHS
Not for Resale

Table 5.15.10.4 Smoke-Protected Assembly Seating

Total Number of Seats in the Space	Number of Seats per Row Permitted to Have a Minimum 305 mm (12 in.) Clear Width Aisle Accessway	
	Aisle or Doorway at Both Ends of Row	Aisle or Doorway at One End of Row
<4,000	14	7
4,000–6,999	15	7
7,000–9,999	16	8
10,000–12,999	17	8
13,000–15,999	18	9
16,000–18,999	19	9
19,000–21,999	20	10
≥22,000	21	11

5.15.10.5 With smoke-protected assembly seating for rows of seats served by an aisle or doorway at one end only, the aisle accessway minimum clear width of 305 mm (12 in.) shall be increased by 15 mm (0.6 in.) for every additional seat beyond the number stipulated in Table 5.15.10.4, but the minimum clear width shall not be required to exceed 560 mm (22 in.).

5.15.10.6 Smoke-protected assembly seating shall be permitted to have a common path of travel of 15 m (50 ft) from any seat to a point where a person has a choice of two directions of egress travel.

5.15.10.7 Aisle Termination. For smoke-protected assembly seating, the dead ends in aisle stairs shall not exceed a distance of 21 rows.

Exception: A longer dead-end aisle shall be permitted for smoke-protected assembly seating where seats served by the dead-end aisle are not more than 40 seats from another aisle, measured along a row of seats having an aisle accessway with a minimum clear width of 305 mm (12 in.) plus 7.6 mm (0.3 in.) for each additional seat above seven in the row.

5.15.10.8 For smoke-protected assembly seating, the travel distance from each seat to the nearest entrance to an egress vomitory portal or egress concourse shall not exceed 122 m (400 ft). The travel distance from the entrance to vomitory portal or from egress concourse to an approved egress stair, ramp, or walk at the building exterior shall not exceed 60 m (200 ft).

Exception: In outdoor assembly seating facilities of noncombustible or limited-combustible construction, where all portions of the means of egress are essentially open to the outside, the distance shall not be limited.

5.15.11 Grandstands.

5.15.11.1 General. Grandstands shall comply with the provisions of this chapter as modified by 5.15.11.

5.15.11.2 Seating.

5.15.11.2.1 Where grandstand seating without backs is used indoors, rows of seats shall be spaced not less than 560 mm (22 in.) back to back.

5.15.11.2.2 The depth of footboards and seat boards in grandstands shall be not less than 230 mm (9 in.). Where the same level is not used for both seat foundations and footrests, footrests independent of seats shall be provided.

5.15.11.2.3 Seats and footrests of grandstands shall be supported securely and fastened in such a manner that they cannot be displaced inadvertently.

5.15.11.2.4 Individual seats or chairs shall be permitted only if secured in rows in an approved manner, unless seats do not exceed 16 in number and are located on level floors and within railed-in enclosures, such as boxes.

5.15.11.3 Guards and Railings.

5.15.11.3.1 Railings or guards not less than 1065 mm (42 in.) above the aisle surface or footrest or not less than 915 mm (36 in.) vertically above the center of the seat or seat board surface, whichever is adjacent, shall be provided along those portions of the backs and ends of all grandstands where the seats are more than 1220 mm (48 in.) above the floor or ground.

Exception: This requirement shall not apply where an adjacent wall or fence affords equivalent safeguard.

5.15.11.3.2 Where the front footrest of any grandstand is more than 610 mm (24 in.) above the floor, railings or guards not less than 825 mm (33 in.) above such footrests shall be provided.

Exception: In grandstands, or where the front row of seats includes backrests, the rails shall be not less than 660 mm (26 in.) high.

5.15.11.3.3 Cross aisles located within the seating area shall be provided with rails not less than 660 mm (26 in.) high along the front edge of the cross aisle.

Exception: Where the backs of the seats in front of the cross aisle project 610 mm (24 in.) or more above the surface of the cross aisle, the rail shall not be required.

5.15.11.3.4 Vertical openings between guardrails and footboards or seat boards shall be provided with intermediate construction so that a 100-mm (4-in.) diameter sphere cannot pass through the opening.

5.15.11.3.5 An opening between the seat board and footboard located more than 760 mm (30 in.) above grade shall be provided with intermediate construction so that a 100-mm (4-in.) diameter sphere cannot pass through the opening.

5.15.12 Folding and Telescopic Seating.

5.15.12.1 General. Folding and telescopic seating shall comply with the provisions of this chapter as modified by 5.15.12.

5.15.12.2 Seating.

5.15.12.2.1 The horizontal distance of seats, measured back to back, shall be not less than 560 mm (22 in.) for seats without backs. There shall be a space of not less than 305 mm (12 in.) between the back of each seat and the front of each seat immediately behind it. If seats are of the chair type, the 305-mm (12-in.) dimension shall be measured to the front edge of the rear seat in its normal unoccupied position. All measurements shall be taken between plumb lines.

5.15.12.2.2 The depth of footboards (footrests) and seat boards in folding and telescopic seating shall be not less than 230 mm (9 in.). Where the same level is not used for both seat foundations and footrests, footrests independent of seats shall be provided.

Copyright National Fire Protection Association
Provided by IHS under license with NFPA
No reproduction or networking permitted without license from IHS
Not for Resale

5.15.12.2.3 Individual chair-type seats shall be permitted in folding and telescopic seating only if firmly secured in groups of not less than three.

5.15.12.3 Guards and Railings.

5.15.12.3.1 Railings or guards not less than 1065 mm (42 in.) above the aisle surface or footrest or not less than 915 mm (36 in.) vertically above the center of the seat or seat board surface, whichever is adjacent, shall be provided along those portions of the backs and ends of all folding and telescopic seating where the seats are more than 1220 mm (48 in.) above the floor or ground.

Exception: This requirement shall not apply where an adjacent wall or fence affords equivalent safeguard.

5.15.12.3.2 Where the front footrest of folding or telescopic seating is more than 610 mm (24 in.) above the floor, railings or guards not less than 840 mm (33 in.) above such footrests shall be provided.

Exception: Where the front row of seats includes backrests, the rails shall be not less than 660 mm (26 in.) high.

5.15.12.3.3 Cross aisles located within the seating area shall be provided with rails not less than 660 mm (26 in.) high along the front edge of the cross aisle.

Exception: Where the backs of the seats in front of the cross aisle project 610 mm (24 in.) or more above the surface of the cross aisle, the rail shall not be required.

5.15.12.3.4 Vertical openings between guardrails and footboards or seat boards shall be provided with intermediate construction so that a 100-mm (4-in.) diameter sphere cannot pass through the opening.

5.15.12.3.5 An opening between the seat board and footboard located more than 760 mm (30 in.) above grade shall be provided with intermediate construction so that a 100-mm (4-in.) diameter sphere cannot pass through the opening.

Chapter 6 Means of Escape

6.1* General.

6.1.1 The provisions of this chapter shall apply to the following:

(1) One- and two-family dwellings *(see Section 6.2)*
(2) Dwelling units in apartment buildings *(see Section 6.3)*
(3) Guest rooms or guest suites in hotels and dormitories *(see Section 6.4)*
(4) Lodging and rooming houses *(see Section 6.5)*
(5) Small board and care facilities *(see Section 6.6)*
(6) Group day-care homes

6.1.2 The provisions of Chapter 5 shall not be applicable to means of escape unless specifically referenced in this chapter.

6.1.3 Means of egress from dwelling units to the outside and from guest rooms or guest suites to the outside shall be in accordance with Chapter 5.

6.2 One- and Two-Family Dwellings.

6.2.1 Number and Types of Means of Escape.

6.2.1.1 Number of Means of Escape. In any dwelling or dwelling unit of two rooms or more, every sleeping room and every living area shall have at least one primary means of escape and one secondary means of escape.

Exception: A secondary means of escape shall not be required under either of the following conditions:

(1) Where the bedroom or living area has a door leading directly to the outside of the building at or to grade level
(2) Where the dwelling unit is protected throughout by an approved, automatic sprinkler system

6.2.1.2 Primary Means of Escape. The primary means of escape shall be a door, stairway, or ramp that provides a means of unobstructed travel to the outside of the dwelling unit at street or ground level.

6.2.1.3* Secondary Means of Escape. The secondary means of escape shall be one of the following:

(1) A door, stairway, passage, or hall that provides a way of unobstructed travel to the outside of the dwelling at street or ground level and that is independent of and remote from the primary means of escape.
(2) A passage through an adjacent nonlockable space, independent of and remote from the primary means of escape, to any approved means of escape.
(3)* An outside window or door that is operable from the inside without the use of tools, keys, or special effort and that provides a clear opening of not less than 0.53 m^2 (5.7 ft^2) with the width not less than 510 mm (20 in.) and the height not less than 610 mm (24 in.). The bottom of the opening shall be not more than 1120 mm (44 in.) above the floor. Such means of escape shall be acceptable under any of the following conditions:
   (a) The window is within 6100 mm (240 in.) of grade.
   (b) The window is directly accessible to fire department rescue apparatus as approved by the authority having jurisdiction.
   (c) The window or door opens onto an exterior balcony.
   (d) The window has a sill height below the adjacent ground level and is provided with a window well meeting the following criteria:
      i. The window well shall have horizontal dimensions that allow the window to be fully opened.
      ii. The window well shall have an accessible net clear opening of not less than 0.82 m^2 (9 ft^2) with a length and width of not less than 915 mm (36 in.).
      iii. A window well with a vertical depth of more than 1120 mm (44 in.) shall be equipped with an approved, permanently affixed ladder or steps where the ladder or steps do not encroach more than 150 mm (6 in.) in the required dimensions of the window well and are not obstructed by the window.

6.2.1.4 Two Primary Means of Escape. Every story exceeding 185 m^2 (2000 ft^2) in area or with a travel distance to the primary means of escape exceeding 23 m (75 ft) shall be provided with two primary means of escape that are remotely located from each other.

Exception: Buildings protected throughout by an approved, supervised automatic sprinkler system.

6.2.2 Arrangement of Means of Escape. No required path of travel in a means of escape from any room to the outside shall be through another room or apartment not under the immediate control of the occupant of the first room or through a bathroom or other space subject to locking.

Copyright National Fire Protection Association
Provided by IHS under license with NFPA
No reproduction or networking permitted without license from IHS
Not for Resale

6.2.3 Doors.

6.2.3.1 No door in the path of travel of a means of escape shall be less than 710 mm (28 in.) wide.

Exception: Bathroom doors shall be not less than 610 mm (24 in.) wide.

6.2.3.2 Doors shall be not less than 1980 mm (78 in.) in nominal height.

6.2.3.3 Every closet door latch shall be such that children can open the door from inside the closet.

6.2.3.4 Every bathroom door shall be designed to allow opening from the outside during an emergency when locked.

6.2.3.5* No door in any means of escape shall be locked against egress when the building is occupied. All locking devices that impede or prohibit egress or that cannot be easily disengaged shall be prohibited.

6.2.4 Stairs, Landings, Ramps, Balconies, or Porches.

6.2.4.1 Stairs, ramps, guards, and handrails shall be in accordance with 5.2.2 for stairs and 5.2.5 for ramps.

Exception No. 1: The provisions of 5.2.2.5, 5.2.5.5, and 5.7.3 shall not apply.

Exception No. 2: If serving as a secondary means of escape, stairs that comply with the width, riser height, tread depth, and handrail requirements of Table 7.2.24(E), and ramps with slopes not steeper than 1 in 6 shall be permitted.

6.2.4.2 The clear width of stairs, landings, ramps, balconies, and porches shall be not less than 915 mm (36 in.), measured in accordance with 5.3.2.

6.2.4.3 Spiral stairs and winders in accordance with 5.2.2 shall be permitted within a single dwelling unit.

6.2.4.4 No sleeping rooms or living rooms shall be accessible by only a ladder, stair ladder, alternating tread device, folding stairs, or through a trap door.

6.2.5 Hallways. The minimum width of hallways shall be 915 mm (36 in.), measured in accordance with 5.3.2. The minimum height shall be not less than 2135 mm (84 in.) nominal height, with projections from the ceiling providing not less than 2030 mm (80 in.) nominal height.

6.3 Dwelling Units in Apartment Buildings.

6.3.1 Means of escape within the apartment dwelling unit shall comply with the provisions of Section 6.2 for one- and two-family dwellings.

6.3.2 Within any individual apartment dwelling unit, stairs more than one story above or below the entrance floor level of the apartment dwelling unit shall not be permitted.

6.4 Guest Rooms or Guest Suites in Hotels and Dormitories. Means of escape within the guest room or guest suite shall comply with the provisions of Section 6.2 for one- and two-family dwellings. For the purpose of application of the requirements of Section 6.2, guest room and guest suite shall be synonymous with dwelling or living unit.

6.5 Lodging and Rooming Houses.

6.5.1 Number and Types of Means of Escape.

6.5.1.1 Every sleeping room and living area shall have access to a primary means of escape that complies with Section 6.2 for one- and two-family dwellings and is located to provide a safe path of travel to the outside. Where the sleeping room is above or below the level of exit discharge, the primary means of escape shall be an interior stair in accordance with 6.5.2, an exterior stair in accordance with 6.5.3, a horizontal exit in accordance with 5.2.4, or an existing fire escape stair in accordance with 7.2.24.

6.5.1.2 In addition to the primary route, each sleeping room and living area shall have a second means of escape in accordance with 6.2.1.3.

Exception: If the sleeping room or living area has a door leading directly outside the building with access to grade or to a stairway that meets the requirements for exterior stairs, that escape shall be considered as meeting all of the escape requirements for that sleeping room or living area.

6.5.1.3 Every story exceeding 185 m^2 (2000 ft^2) in area or with travel distance to the primary means of escape exceeding 23 m (75 ft) shall be provided with two primary means of escape that are remotely located from each other.

Exception: Buildings protected throughout by an approved, supervised automatic sprinkler system.

6.5.2 Interior stairways shall be enclosed by ½-hour fire barriers with all openings protected with smoke-actuated automatic-closing or self-closing doors that have a fire protection rating comparable to that required for the enclosure. The stairway shall comply with 5.2.2.5.3.

Exception No. 1: Where an interior stair connects the street floor with the story next above or below only, but not both, the interior stair shall be required to be enclosed only on the street floor.

Exception No. 2: In buildings that are three or fewer stories in height and are protected throughout by an approved, supervised automatic sprinkler system, stairways shall be permitted to be unprotected. However, in such cases, there shall still remain a primary means of escape from each sleeping area that does not require occupants to pass through a portion of a lower floor, unless that route is separated from all spaces on that floor by construction having a ½-hour fire resistance rating.

6.5.3 Exterior stairs shall be protected against blockage caused by fire that would simultaneously expose both the interior and exterior means of escape. This shall be permitted to be accomplished through separation by physical distance, arrangement of the stairs, protection of the openings exposing the stairs, or other means acceptable to the authority having jurisdiction.

6.5.4 No door or path of travel in a means of escape shall be less than 710 mm (28 in.) wide.

Exception: Bathroom doors shall be not less than 610 mm (24 in.) wide.

6.5.5 Every closet door latch shall be such that it can be readily opened from the inside in case of emergency.

6.5.6 Every bathroom door shall be designed to allow it to be opened from the outside during an emergency when locked.

6.5.7 Winders in accordance with 5.2.2.2.4 shall be permitted.

6.5.8* No door in any means of escape shall be locked against egress when the building is occupied.

Exception: Delayed egress locks that comply with 5.2.1.6.1 shall be permitted, provided that not more than one such device is located in any one escape path.

--`,,,-`-`,,`,,`,`,,`---

Copyright National Fire Protection Association
Provided by IHS under license with NFPA
No reproduction or networking permitted without license from IHS
Not for Resale

6.5.9 Doors serving a single dwelling unit shall be permitted to be provided with a lock in accordance with 5.2.1.5.2.

6.5.10 All sleeping rooms shall be separated from escape route corridors by walls and doors that are smoke resistant. There shall be no louvers or operable transoms or other air passages penetrating the wall except properly installed heating and utility installations other than transfer grilles. Transfer grilles shall be prohibited. Doors shall be provided with latches or other mechanisms suitable for keeping the doors closed. No doors shall be arranged to prevent the occupant from closing the door. Doors shall be self-closing or automatic-closing upon detection of smoke.

Exception: Door-closing devices shall not be required in buildings that are protected throughout by an approved, automatic sprinkler system.

6.6 Small Board and Care Facilities.

6.6.1 Number of Means of Escape. Each normally occupied story of the facility shall have at least two remotely located means of escape that do not involve using windows. At least one of these means of escape shall comply with 6.6.2.

Exception No. 1: In prompt evacuation capability facilities, one means of escape shall be permitted to involve windows that comply with 6.6.3(3).

Exception No. 2: A second means of escape from each story shall not be required if the entire building is protected throughout by an approved, automatic sprinkler system and the facility has two means of escape.

6.6.2 Primary Means of Escape. Every sleeping room and living area shall have access to a primary means of escape located to provide a safe path of travel to the outside. Where sleeping rooms or living areas are above or below the level of exit discharge, the primary means of escape shall be an interior stair in accordance with 6.6.4, an exterior stair, a horizontal exit, or an existing fire escape stair.

6.6.3* Secondary Means of Escape from Sleeping Rooms. In addition to the primary route, each sleeping room in small residential board and care homes that are not protected by an approved, automatic sprinkler system shall have a secondary means of escape that consists of one of the following:

(1) A door, stairway, passage, or hall that provides a path of unobstructed travel to the outside of the dwelling at street or ground level and is independent of and remotely located from the primary means of escape
(2) A passage through an adjacent nonlockable space, independent of and remotely located from the primary means of escape, to any approved means of escape
(3) An outside window or door that is operable from the inside without the use of tools, keys, or special effort and provides a clear opening of not less than 0.53 m^2 (5.7 ft^2) with the width not less than 510 mm (20 in.) and the height not less than 610 mm (24 in.). The bottom of the opening shall be not more than 1120 mm (44 in.) above the floor. Such means of escape shall be acceptable under any of the following conditions:
    (a) The window is within 6100 mm (240 in.) of grade.
    (b) The window is directly accessible to fire department rescue apparatus, as approved by the authority having jurisdiction.
    (c) The window or door opens onto an exterior balcony.

Exception: Where a sleeping room has a door leading directly to the outside of the building with access to grade or to a stairway that meets the requirements of exterior stairs, that means of escape shall be considered as meeting all the escape requirements for the sleeping room.

6.6.4 Interior Stairs Used for Primary Means of Escape. Interior stairs shall be enclosed with ½-hour fire barriers with all openings equipped with smoke-actuated automatic-closing or self-closing doors that have a fire protection rating comparable to that required for the enclosure. Stairs shall comply with 5.2.2.5.3. The entire primary means of escape shall be arranged so that occupants are not required to pass through a portion of a lower story unless that route is separated from all spaces on that story by construction having not less than a ½-hour fire resistance rating. The supporting construction shall be protected to afford the required fire resistance rating of the wall supported in buildings of other than nonrated construction.

Exception No. 1: Stairs that connect a story at street level to only one other story shall be permitted to be open to the story that is not at street level.

Exception No. 2: For prompt and slow evacuation capability facilities in buildings that are three or fewer stories in height and have an approved, automatic sprinkler system using quick-response or residential sprinklers, stair enclosures shall not be required, provided there still remains a primary means of escape from each sleeping area that does not require occupants to pass through a portion of a lower floor, unless that route is separated from all spaces on that floor by construction having a ½-hour fire resistance rating.

Exception No. 3: In buildings that are two or fewer stories in height and house prompt evacuation capability facilities with not more than eight residents, stair enclosures shall not be required.

6.6.5 Exterior stairs shall be reasonably protected against blockage caused by fire that would simultaneously expose both the interior and the exterior means of escape. This shall be accomplished through separation by physical distance, arrangement of the stairs, protection of the openings exposing the stairs, or other means acceptable to the authority having jurisdiction.

6.6.6 Doors.

6.6.6.1 No door or path of travel to a means of escape shall be less than 810 mm (32 in.) wide.

Exception No. 1: In conversions, 710-mm (28-in.) doors shall be permitted to continue to be used.

Exception No. 2: Bathroom doors shall be not less than 610 mm (24 in.) wide.

6.6.6.2 Every closet door latch shall be readily opened from the inside in case of an emergency.

6.6.6.3 Every bathroom door shall be designed to allow opening from the outside during an emergency when locked.

6.6.6.4 No door in any means of escape shall be locked against egress when the building is occupied.

Exception: Delayed egress locks that comply with 5.2.1.6.1 shall be permitted on exterior doors.

6.6.6.5 Door opening forces shall comply with 5.2.1.4.7.

6.6.6.6 Door latch releasing shall comply with 5.2.1.5.5.

6.6.7 Stairs.

6.6.7.1 Stairs shall comply with 5.2.2.

6.6.7.2 Winders that comply with 5.2.2.2.4 shall be permitted.

--`,,,-`-`,,`,,`,`,,`---

Copyright National Fire Protection Association
Provided by IHS under license with NFPA
No reproduction or networking permitted without license from IHS
Not for Resale

6.6.8 Means of Escape Corridors.

6.6.8.1* The separation walls of sleeping rooms shall be capable of resisting fire for at least ½ hour, which is considered to be achieved if the partitioning is finished on both sides with lath and plaster or material that provides a 15-minute thermal barrier. Sleeping room doors shall be substantial doors, such as those of 44-mm (1¾-in.) thick, solid bonded wood core construction or of other construction of equal or greater stability and fire integrity. Any vision panels shall be fixed fire window assemblies or shall be wired glass not exceeding 0.84 m^2 (9 ft^2) each in area and installed in approved frames.

Exception No. 1: In prompt evacuation capability facilities, all sleeping rooms shall be separated from the escape route by smoke partitions in accordance with 5.13. Door closings shall be regulated by 6.6.8.4. The provisions of 5.13.3.5 shall not apply.

Exception No. 2: This requirement shall not apply to corridor walls and doors that are smoke partitions in accordance with 5.13 and that are protected by approved, automatic sprinklers on both sides of the wall and door. In such instances, there shall be no limitation on the type or size of glass panels. Door closings shall be regulated by 6.6.8.4. The provisions of 5.13.3.5 shall not apply.

Exception No. 3: Sleeping arrangements that are not located in sleeping rooms shall be permitted for staff members, provided alarm audibility in the sleeping area is sufficient to awaken staff who might be sleeping.

6.6.8.2 There shall be no louvers or operable transoms or other air passages penetrating the wall except properly installed heating and utility installations other than transfer grilles. Transfer grilles shall be prohibited.

6.6.8.3 Doors shall be provided with latches or other mechanisms suitable for keeping the doors closed. No doors shall be arranged to prevent the occupant from closing the door.

6.6.8.4 Doors shall be self-closing or automatic-closing in accordance with 5.2.1.8.

Exception: Door-closing devices shall not be required in buildings that are protected throughout by an approved, automatic sprinkler system.

Chapter 7 Alterations, Repairs, or Change of Occupancy in Existing Structures

7.1 Application. Means of egress in existing buildings undergoing alterations, repairs, or change of occupancy shall comply with Chapter 5 as modified by this chapter.

7.2 Exemptions from Chapter 5 Requirements.

7.2.1 Existing Corridor Doors in Large Residential Board and Care Facilities [Exemption to 5.1.1.1.6(D)]. In large residential board and care facility buildings that are protected throughout by an approved, automatic sprinkler system, existing corridor doors in renovations and conversions, from any existing residential or health care occupancy to a residential board and care occupancy, that are nonrated doors that resist the passage of smoke shall be permitted to continue to be used.

7.2.2 Walking Surfaces in the Means of Egress [Exemption from 5.1.3.2, 5.1.3.3, and 5.1.3.4]. Existing walking surfaces shall be exempt from the provisions of 5.1.3.2, 5.1.3.3, and 5.1.3.4 where approved by the authority having jurisdiction.

7.2.3 Egress Capacity Width [Exemption from 5.2.1.2.1]. In determining the width of any existing door installation for purposes of calculating capacity, only the clear width of the doorway when the door is in the full open position shall be measured. Clear width shall be determined in accordance with 5.3.2.

7.2.4 Floor Level at Doors to the Exterior [Exemption to 5.2.1.3]. If approved by the authority having jurisdiction, in existing buildings, where the door discharges to the outside or to an exterior balcony or exterior exit access, the floor level outside the door shall be permitted to be one step lower than the floor level inside, but not more than 205 mm (8 in.) lower. In existing buildings, a door at the top of a stair shall be permitted to open directly at a stair, provided that the door does not swing over the stair and the door serves an area with an occupant load of fewer than 50 persons.

7.2.5 Door Swing at Landings [Exemption to 5.2.1.4.5]. In existing buildings, a door providing access to a stair shall not be required to maintain any minimum unobstructed width during its swing, provided that it meets the requirement that limits its projection to not more than 180 mm (7 in.) into the required width of a stair or landing when the door is fully open. Existing landings shall be permitted to have a width less than the width of the door where approved by the authority having jurisdiction.

7.2.6 Panic Hardware and Fire Exit Hardware Mounting Height [Exemption to 5.2.1.7.1(1)]. The positioning of the actuating portion of the panic hardware or fire exit hardware shall be permitted to remain in the range of 760 mm to 1220 mm (30 in. to 48 in.) above the floor.

7.2.7 Self-Closing Devices [Exemption to 5.2.1.8.2(3)]. Existing smoke detectors installed in such a way as to detect smoke on either side of the door opening shall be permitted in lieu of smoke detectors installed in accordance with the requirements for smoke detectors for door release service in *NFPA 72, National Fire Alarm Code*, where approved by the authority having jurisdiction.

7.2.8* Stair Dimensional Criteria [Exemption to 5.2.2.2.1]. Existing stairs shall be permitted to remain in use, provided they meet the requirements for existing stairs shown in Table 7.2.8. Where approved by the authority having jurisdiction, existing stairs shall be permitted to be rebuilt in accordance with the table's dimensional criteria and in accordance with other *Code* requirements in 5.2.2 for stairs.

Table 7.2.8 Existing Stairs

Element	Dimension
Minimum width clear of all obstructions, except projections not more than 90 mm (3½ in.) at or below handrail height on each side	1120 mm (44 in.); 915 mm (36 in.) if total occupant load of all stories served by stairways is fewer than 50
Maximum height of risers	205 mm (8 in.)
Minimum tread depth	230 mm (9 in.)
Minimum headroom	2030 cm (80 in.)
Maximum height between landings	3660 mm (144 in.)
Landing	*(See 5.2.1.3 and 5.2.2.3.2.)*

Copyright National Fire Protection Association
Provided by IHS under license with NFPA
No reproduction or networking permitted without license from IHS
Not for Resale

7.2.9 Spiral Stairs [Exemption to 5.2.2.2.3]. In the occupancies shown in Table 7.2.9, existing spiral stairs shall be permitted as a component in a means of egress under the following conditions:

(1) The occupant load served shall not exceed five persons.
(2) The clear width of the stairs shall be not less than 660 mm (26 in.).
(3) The height of risers shall not exceed 240 mm (9½ in.).
(4) The headroom shall be not less than 1980 mm (78 in.).
(5) Treads shall have a minimum depth of 190 mm (7½ in.) at a point 305 mm (12 in.) from the narrower edge.
(6) All treads shall be identical.

Table 7.2.9 Occupancies Permitting Spiral Stairs

Occupancy	Condition
Assembly	From lighting and access catwalks, galleries, and gridirons
Detention and correctional	For access to and between staff locations
Apartment buildings	Within a single dwelling unit
Dwellings	Within a single dwelling unit
Mercantile	—
Business	—
Industrial	—
Storage	—

7.2.10 Handrails at Sides of Stairs and Intermediate Handrails [Exemption to 5.2.2.4.2]. Existing stairs and existing ramps shall have a handrail on at least one side. Existing handrails shall be provided within 1120 mm (44 in.) of all portions of the required egress width of stairs.

7.2.11 Guard and Handrail Continuity [Exemption to 5.2.2.4.3]. Existing handrails shall not be required to be continuous between flights of stairs at landings.

7.2.11.1 Handrail Minimum Height [Exemption to 5.2.2.4.5.1]. Existing required handrails shall be not less than 760 mm (30 in.) and not more than 965 mm (38 in.) above the upper surface of the tread, measured vertically to the top of the rail from the leading edge of the tread.

7.2.11.2 Handrail Minimum Clearance to Wall [Exemption to 5.2.2.4.5.2]. Existing handrails shall not be required to provide a minimum 38 mm (1½ in.) clearance between the handrail and the wall to which it is fastened.

7.2.11.3 Handrail Grasp Continuity [Exemption to 5.2.2.4.5.3]. Existing handrails shall not be required to be continuously graspable along the entire length.

7.2.11.4 Handrail Termination [Exemption to 5.2.2.4.5.5]. Existing handrail ends shall not be required to be returned to the wall or floor or to terminate at newel posts.

7.2.11.5 Handrail Continuation Beyond Top and Bottom Riser [Exemption to 5.2.2.4.5.6]. Where approved by the authority having jurisdiction because of space limitations, the horizontal extension of new handrails at the top of the flight shall not be required, provided that the handrail extends, at the required height, to a point directly above the top riser. Existing handrails shall not be required to extend beyond points above the top and bottom risers.

7.2.11.6* Guard Minimum Height [Exemption to 5.2.2.4.6.2]. Existing guards on existing stairs shall be at least 760 mm (30 in.) high. Existing guards, for other than stairs, within dwelling units shall be at least 915 mm (36 in.) high.

7.2.11.7 Guard Openings Maximum Dimension [Exemption to 5.2.2.4.6.3]. Subject to the approval of the authority having jurisdiction, existing guards shall not be required to meet the 100-mm (4-in.) diameter maximum opening requirement.

7.2.12 Stairway Exposure Protection [Exemption to 5.2.2.5.2]. Existing stairways shall not be required to meet the provision for a 3050-m (120-in.) extension to fire resistance–rated walls.

7.2.13 Smokeproof Enclosures [Exemption to 5.2.3.1]. Where approved by the authority having jurisdiction, existing smokeproof enclosures shall not be required to meet the provisions of 5.2.3.

7.2.14 Horizontal Exit Fire Compartment Exposure Protection [Exemption to 5.2.4.4.2]. Existing horizontal exits shall not be required to meet the provision for a 3050-mm (120-in.) extension to fire resistance–rated walls.

7.2.15 Duct Penetrations of Horizontal Exits [Exemption to 5.2.4.4.3]. Existing duct penetrations protected by approved and listed fire dampers shall be permitted to remain.

7.2.16 Horizontal Exit Door Swing Direction [Exemption to 5.2.4.4.6]. Horizontal exit doors in corridors not exceeding 1830 mm (72 in.) wide in existing buildings shall not be required to be provided in pairs and shall be permitted to swing against the direction of egress travel. Existing horizontal exit doors in health care occupancies and detention and correctional occupancies shall be permitted to swing against the direction of egress travel.

7.2.17 Horizontal Exit Cross-Corridor Doors' Closers [Exemption to 5.2.4.4.8]. Where approved by the authority having jurisdiction, existing doors in horizontal exits shall be permitted to be self-closing in lieu of automatic-closing.

7.2.18 Horizontal Exit Bridge and Balcony Width [Exemption to 5.2.4.5.2]. Existing bridges or balconies shall be exempt from the minimum width provisions specified in 5.2.4.5.2.

7.2.19 Horizontal Exit Door Swing to Bridges and Balconies [Exemption to 5.2.4.5.4]. Where approved by the authority having jurisdiction, existing horizontal exit doors on both ends of the bridge or balcony shall be permitted to swing out from the building.

7.2.20 Horizontal Exit Bridge and Balcony Exposure Protection [Exemption to 5.2.4.5.6]. Where approved by the authority having jurisdiction, existing bridges and balconies shall be exempt from the exposure protection provisions of 5.2.4.5.6.

7.2.21 Ramp Dimensional Criteria [Exemption to 5.2.5.2]. New ramps built in existing buildings or facilities, where existing space limitations necessitate a steepness greater than permitted for new construction, shall be permitted to have slopes not exceeding 1 in 10 for rises exceeding 75 mm (3 in.) but not exceeding 150 mm (6 in.); and shall be permitted to have slopes not exceeding 1 in 8 for rises not exceeding 75 mm (3 in.). Existing ramps shall be permitted to remain in use or to be rebuilt if they meet the requirements shown in Table 7.2.21. Existing ramps with slopes not steeper than 1 in 6 shall be permitted to remain in use, where approved by the authority having jurisdiction.

Copyright National Fire Protection Association
Provided by IHS under license with NFPA
No reproduction or networking permitted without license from IHS
Not for Resale

Table 7.2.21 Existing and Rebuilt Ramps

Element	Dimension
Minimum width	760 mm (30 in.)
Maximum slope	1 in 8
Maximum height between landings	3660 mm (144 in.)

7.2.22 Ramp Landings [Exemption to 5.2.5.3.2]. Existing ramps with slopes not steeper than 1 in 10 shall not be required to be provided with landings. Existing landings shall be permitted to be not more than 1220 mm (48 in.) long in the direction of travel, provided the ramp has a straight run. Existing ramps shall be permitted to change direction without a landing.

7.2.23 Exit Passageway Enclosure Openings [Exemption to 5.2.6.3]. Existing fixed wired glass panels in steel sash and fire windows shall be permitted to be continued in use in existing exit passageway separations in a building protected throughout by an approved, automatic sprinkler system.

7.2.24 Fire Escape Stairs [Exemption to 5.2.8]. When approved by the authority having jurisdiction, fire escape stairs shall be permitted to constitute not more than 50 percent of the required means of egress in assembly, detention and correctional, hotel and dormitory, apartment building, mercantile, business, industrial, and storage occupancies. Such fire escape stairs shall comply with the following provisions:

(A)* New Fire Escape Stairs. New fire escape stairs shall be permitted to be erected on existing buildings only where approved by the authority having jurisdiction.

(B) Arrangement. Fire escape stairs shall be of the return platform–type with superimposed runs or of the straight run–type with a platform that continues in the same direction. Fire escape stairs shall be permitted to be parallel to or at angles to buildings. Fire escape stairs shall be permitted to be attached to buildings or erected independently of buildings and connected by walkways.

(C)* Protection of Openings. Each opening shall be protected with approved fire door or fire window assemblies where the opening or any portion of the opening is located as follows:

(1) *Horizontally.* If within 4570 mm (180 in.) of any balcony, platform, or stairway that constitutes a component of the fire escape stair.
(2) *Below.* If within three stories or 10.7 m (35 ft) of any balcony, platform, walkway, or stairway that constitutes a component of the fire escape stair or within two stories or 6100 mm (240 in.) of a platform or walkway leading from any story to the fire escape stair.
(3) *Above.* If within 3050 mm (120 in.) of any balcony, platform, or walkway as measured vertically or of any stair tread surface as measured vertically.
(4) *Top Story.* Protection for wall openings shall not be required where stairs do not lead to the roof.
(5) *Court.* Any wall facing a court served by a fire escape stair where the least dimension of the court is not greater than one-third of the height to the uppermost platform of the fire escape stair measured from the ground.
(6) *Alcove.* Any wall facing an alcove served by a fire escape stair where the width of the alcove is not greater than one-third or the depth more than one-fourth of the height to the uppermost platform of the fire escape stair measured from the ground.

(D) Access. Access to fire escape stairs shall comply with the following:

(1) Access to fire escape stairs shall be in accordance with 7.2.24(E) and 5.5.1.2. New fire escape stairs shall not incorporate ladders or access windows, regardless of occupancy classification or occupant load served.
(2) Fire escape stairs shall extend to the roof in all cases where the roof is subject to occupancy or provides an area of refuge. If the roof has a pitch not exceeding 1 to 6, fire escape ladders in accordance with 5.2.9 or alternating tread devices in accordance with 5.2.11 shall be provided for access to the roof.
(3) Access to a fire escape stair shall be directly to a balcony, landing, or platform and shall be no higher than the floor or windowsill level and no lower than 205 mm (8 in.) below the floor level or 455 mm (18 in.) below the windowsill.

(E) Stair Details. Fire escape stairs shall comply with the requirements of Table 7.2.24(E).

(F) Guards, Handrails, and Visual Enclosures. All fire escape stairs shall have walls or guards and handrails on both sides in accordance with 5.2.2.4. Existing handrails on existing fire escape stairs shall be permitted to serve as guards and handrails, provided the height is does not exceed 1065 mm (42 in.).

(G) Materials. Noncombustible materials shall be used for the construction of all components of fire escape stairs.

(H)* Swinging Stairs. Swinging stairs shall comply with the following:

(1) Where approved by the authority having jurisdiction, a single, swinging stair section shall be permitted to serve as the terminus for fire escape stairs over sidewalks, alleys, or driveways.
(2) Swinging stair sections shall not be located over doors, over the path of travel from any other exit, or in any locations where there are likely to be obstructions.
(3) The width of swinging stair sections shall be not less than that of the fire escape stairs above.
(4) The pitch of swinging stair sections shall be no steeper than that of the fire escape stairs above.
(5) Guards and handrails shall be provided in accordance with 7.2.24(F). Guards and handrails shall be designed to minimize the possibility of injury to persons where stairs swing downward. The minimum clearance between moving sections and any other portion of the stair system where hands have the potential to be caught shall be 100 mm (4 in.).
(6) Where the distance from the lowest platform to ground is not less than 3660 mm (144 in.), an intermediate balcony not exceeding 3660 mm (144 in.) from the ground and not less than 2135 mm (84 in.) in the clear underneath shall be provided, with the width not less than that of the stairs and length not less than 1220 mm (48 in.).
(7) Swinging stairs shall be counterbalanced about a pivot, and cables shall not be used. A weight of 68 kg (150 lb) located one step from the pivot shall not cause the stairs to swing downward, and a weight of 68 kg (150 lb) located one-quarter of the length of the swinging stairs from the pivot shall cause the stairs to swing down.

Copyright National Fire Protection Association
Provided by IHS under license with NFPA
No reproduction or networking permitted without license from IHS
Not for Resale

Table 7.2.24(E) Fire Escape Stairs

Element	Serving More Than 10 Occupants	Serving 10 or Fewer Occupants
Minimum widths	560 mm (22 in.) clear between rails	Same
Minimum horizontal dimension of any landing or platform	560 mm (22 in.)	Same
Maximum riser height	230 mm (9 in.)	Same
Minimum tread, exclusive of nosing	255 mm (10 in.)	Same
Tread construction	Solid, 13 mm (½-in.) diameter. Perforations permitted	Same
Winders	Not permitted	Permitted subject to 5.2.2.2.4
Spiral	Not permitted	Permitted subject to 5.2.2.2.3
Maximum height between landings	3660 mm (144 in.)	Same
Headroom, minimum	203 cm (6 ft 8 in.)	Same
Access to escape *[See 7.2.24(D)(1).]*	Door or casement windows 610 mm × 1980 mm (24 in. × 78 in.) or double-hung windows 760 mm × 915 mm (30 in. × 36 in.) clear opening	Windows providing a clear opening of not less than 510 mm (20 in.) in width, 610 mm (24 in.) in height, and 0.53 m^2 (5.7 ft^2) in area
Level of access opening	Not exceeding 305 mm (12 in.) above floor; steps if higher	Same
Discharge to ground	Swinging stair section permitted if approved by authority having jurisdiction	Same
Capacity, number of persons	13 mm (0.5 in.) per person, if access by door; 25 mm (1 in.) per person if access by climbing over windowsill	10

(8) The pivot for swinging stairs shall be of a corrosion-resistant assembly or have clearances to prevent sticking due to corrosion.
(9)*Devices shall not be installed to lock a swinging stair section in the up position.

(I) Intervening Spaces. Intervening spaces shall comply with the following:

(1) Where approved by the authority having jurisdiction, fire escape stairs shall be permitted to lead to an adjoining roof that is crossed before downward travel is continued. The direction of travel shall be clearly marked, and walkways with guards and handrails that comply with 5.2.2.4 shall be provided.
(2) Where approved by the authority having jurisdiction, fire escape stairs shall be permitted to be used in combination with inside or outside stairs that comply with 5.2.2, provided a continuous path of travel is maintained.

7.2.25 Construction and Installation of Fire Escape Ladders [Exemption to 5.2.9.2.1]. Where approved by the authority having jurisdiction, existing ladders shall be exempt from the provisions of ANSI A14.3, *Safety Code for Fixed Ladders.*

7.2.26 Area of Refuge Minimum Stair Width [Exemption to 5.2.12.2.3]. Existing exit stairs and landings that provide not less than 940 mm (37 in.) in clear width, measured at and below handrail height, shall be permitted to provide egress from an area of refuge to a public way.

7.2.27 Area of Refuge Minimum Separating Construction [Exemption to 5.2.12.3.4]. Existing barriers with a minimum ½-hour fire resistance rating shall be permitted to separate the area of refuge from the remainder of the story.

7.2.28 Minimum Width of Exit Access Abutted by Furniture and Movable Partitions [Exemption to 5.3.4.1 Exception No. 1]. The minimum width of an exit access formed by furniture and movable partitions, serving not more than six people, and not exceeding 15 m (50 ft) in length, shall be not less than 455 mm (18 in.) at and below a height of 965 mm (38 in.) or 710 mm (28 in.) above a height of 965 mm (38 in.) if the minimum 710-mm (28-in.) width can be provided without moving permanent walls.

7.2.29 Remoteness of Exit and Exit Access Doors [Exemption to 5.5.1.4]. In existing buildings, exit and exit access doors shall be exempt from the minimum one-half diagonal measurement remoteness rule, provided that such exits or exit access doors are remotely located in accordance with 5.5.1.3.

7.2.30 Common Path of Travel in Detention and Correctional Occupancies [Exemption to 5.5.1.8]. In existing nonsprinklered detention and correctional occupancies undergoing alterations or repairs, no common path of travel shall exceed 15 m (50 ft).

7.2.31* Subdivision of Detention and Correctional Occupancy Resident Housing Spaces [Exemption to 5.5.1.26]. In nonsprinklered detention and correctional occupancies undergoing alterations or repairs, subdivision of facility spaces shall comply with Table 7.2.31.

7.2.32 Travel Distance in Detention and Correctional Occupancies [Exemption to 5.6.1]. In existing nonsprinklered detention and correctional occupancies undergoing alterations or repairs, travel distance shall not be more than the limits specified in Table 7.2.32.

Copyright National Fire Protection Association
Provided by IHS under license with NFPA
No reproduction or networking permitted without license from IHS
Not for Resale

Table 7.2.31 Subdivision of Resident Housing Spaces — Nonsprinklered Buildings

Feature	Use Condition				
	II	III		IV	V
Room to room separation	NR	NR		SR	FR(½)
Room face to corridor separation	SR	SR		SR	FR
Room face to common space separation	NR	NR ≤15 m[a] (≤50 ft)[a]	SR >15 m[a] (>50 ft)[a]	SR	FR
Common space to corridor separation	FR	FR		FR	FR
Total openings in solid room face where room face is required to be smoke resistant or fire rated[b]	0.08 m^2 (0.85 ft^2)	0.08 m^2 (0.85 ft^2)		0.08 m^2 (0.85 ft^2)	0.08 m^2 (0.85 ft^2), closable from inside, or 0.08 m^2 (0.85 ft^2) with smoke control

NR: No requirement. SR: Smoke resistant. FR(½): Fire rated — ½ hour. FR: Fire rated — 1 hour.

Notes:

1. Doors in openings in partitions required to be fire rated (FR(½), FR) in accordance with Table 7.2.31 in other than required enclosures of exits or hazardous areas shall be substantial doors of construction that resists fire for not less than 20 minutes. Vision panels with wired glass or glass with not less than 45-minute fire-rated glazing shall be permitted. Latches and door closers shall not be required on cell doors.
2. Doors in openings in partitions required to be smoke resistant (SR) in accordance with Table 7.2.31 shall be substantial doors of construction that resists the passage of smoke. Latches and door closers shall not be required on cell doors.
3. Under Use Condition II, Use Condition III, or Use Condition IV, a space subdivided by open construction (any combination of grating doors and grating walls or solid walls) shall be permitted to be considered one room if housing not more than 16 persons. The perimeter walls of such space shall be of smoke-resistant construction. Smoke detection shall be provided in such space. Under Use Condition IV, common walls between sleeping areas within the space shall be smoke resistant, and grating doors and fronts shall be permitted to be used. In Use Condition II and Use Condition III, open dormitories shall be permitted to house more than 16 persons as permitted by other sections of this chapter.
4. Where barriers are required to be smoke resistant (SR), the provisions of 5.13 applicable to smoke partitions shall not apply.

[a]Travel distance through the common space to the exit access corridor.

[b]"Total openings in solid room face" includes all openings (for example, undercuts, food passes, grilles), the total of which shall not exceed 0.08 m^2 (0.85 ft^2). All openings shall be 915 mm (36 in.) or less above the floor.

Table 7.2.32 Travel Distance Limits in Nonsprinklered Detention and Correctional Occupancies

Feature	Travel Distance Limit Unsprinklered	
	m	ft
Within sleeping room to exit access door	15	50
Within open dormitory, with smoketight construction and minimum two exit access doors, to exit access door	30	100
From room door to exit	30	100
Total travel distance	45	150

7.2.33 [Exemption to 5.10.6.1]. Where compliance with the headroom requirements of 5.1.2 does not permit the use of signs with 15.2-cm (6-in.) letters, smaller letters shall be permitted subject to approval of the authority having jurisdiction.

7.2.34 Smoke Barriers in Detention and Correctional Occupancies [Exemption to 5.14.3.2(2)]. In nonsprinklered buildings undergoing alterations or repairs for which smoke barriers are required by 5.14.3.1, smoke barriers shall be provided to limit the following:

(1) The housing not to exceed 200 residents in any smoke compartment
(2) The travel distance to a door in a smoke barrier as follows:
  (a) From any room door required as exit access to a maximum of 30 m (100 ft)
  (b) From any point in a room to a maximum of 45 m (150 ft)

7.2.35 Smoke Venting in Detention and Correctional Occupancies. In nonsprinklered buildings undergoing alterations or repairs, means shall be provided to evacuate smoke from the smoke compartment of fire origin. Any of the following means shall be acceptable:

(1) Operable windows on at least two sides of the building, spaced not more than 9.1 m (30 ft) apart, that provide openings with minimum dimensions of not less than 560 mm (22 in.) in width and 610 mm (24 in.) in height
(2)*Manual or automatic smoke vents
(3) Engineered smoke-control system
(4) Mechanical exhaust system providing at least six air changes per hour
(5) Another method acceptable to the authority having jurisdiction

Copyright National Fire Protection Association
Provided by IHS under license with NFPA
No reproduction or networking permitted without license from IHS
Not for Resale

Annex A Explanatory Material

Annex A is not a part of the requirements of this NFPA document but is included for informational purposes only. This annex contains explanatory material, numbered to correspond with the applicable text paragraphs.

A.1.1.2 The *Code* recognizes that panic in a burning building might be uncontrollable, but it deals with the potential panic hazard through measures designed to prevent the development of panic. Experience indicates that panic seldom develops, even in the presence of potential danger, as long as occupants of buildings are moving toward exits that they can see within a reasonable distance, with no obstructions or undue congestion in the path of travel. However, any uncertainty regarding the location or adequacy of means of egress, the presence of smoke, or the stoppage of egress travel, such as might occur when one person stumbles and falls on the stairs, could be conducive to panic. Panic danger is greatest when there are large numbers of people in a confined area.

A.1.2 The purpose of this *Code* is to provide minimum requirements, with due regard to function, for the design and installation of means of egress in buildings and structures for safety to life from fire. Its provisions also aid life safety in similar emergencies.

The *Code* endeavors to avoid requirements that might involve unreasonable hardships or unnecessary inconvenience or interference with the normal use and occupancy of a building, but it provides minimum requirements for means of egress that are consistent with the public interest. The protection methods assume a single fire source.

A.1.3 This document is intended to be used as part of a building code, not as a stand-alone document. This document was developed with the understanding that the building code with which it is used addresses fire protection and life safety features essential to safe egress. These features include classification and separation of occupancies, protection of vertical openings, requirements for fire protection systems and equipment (fire alarms, extinguishers, automatic extinguishing systems, standpipes, and smoke control), interior finish, building construction and compartmentation, building service equipment, and special hazard protection, among others.

This document was written with the expectation that automatic sprinkler protection is provided throughout new health care occupancies and new detention and correctional occupancies. Thus, the provisions of this document are meant for application to sprinklered health care occupancies and sprinklered detention and correctional occupancies. If the building code with which NFPA 101B is to be used does not require automatic sprinkler protection throughout health care occupancies and detention and correctional occupancies, NFPA 101B will not provide the necessary level of life safety for those occupancies. In such cases, NFPA 101B should not be used.

Examples of how the occupancy classifications addressed by this document might compare with the occupancy classifications used in the *International Building Code (IBC)* are illustrated in Table A.1.3.

This document also recognizes that the building code will scope the application of this document as it relates to new construction, additions, alterations, renovations, and change of use.

Table A.1.3 Occupancy Classification Comparison

General	*IBC*	NFPA 101B
Assembly	A1, A2, A3, A4, A5	Assembly
Business	B	Business
Educational	E	Educational
Factory	F1, F2	General and special-purpose industrial
Industrial hazardous	H1, H2, H3	High-hazard industrial, other occupancies with high-hazard contents
	H4	Business, general industrial, storage
	H5	General or high-hazard industrial
Institutional	I1	Large residential board and care
	I2	Health care (hospital, nursing home, limited care)
	I3 (Condition 1-5)	Detention and correctional
	I4 (Adult care, child care, child day care, child day-care home)	Day care (day-care occupancy, group day-care home, family day-care home)
Mercantile	M	Mercantile (Class A, Class B, Class C)
Residential	R1	Hotels
	R2	Apartments, dormitories, lodging, and rooming houses
	R3	One- and two- family dwellings
	R4	Small residential board and care
Storage	S1, S2	Storage
Utility/Misc.	U	(not applicable)

A.1.3.1.5 If the Use Condition I facility conforms to the requirements of residential occupancies under this *Code*, no staffing requirements apply. If the Use Condition I facility conforms to the requirements of Use Condition II facilities, staffing is required.

A.1.4.1 Before a particular mathematical fire model or evaluation system is used, its purpose and limitations must be known. The technical documentation should clearly identify any assumptions included in the evaluation. Also, it is the intent of the Committee on Safety to Life to recognize that future editions of this *Code* are a further refinement of this edition and earlier editions. The changes in future editions will reflect the continuing input of the fire protection/life safety community in its attempt to meet the purpose stated in this *Code*.

This document does not offer a performance-based option, because means of egress is only a portion of an overall life safety system. NFPA *101, Life Safety Code*, presents a performance-based option, because it addresses all aspects of life safety from fire.

--`,,,-`-`,,`,,`,`,,`---

Copyright National Fire Protection Association
Provided by IHS under license with NFPA
No reproduction or networking permitted without license from IHS

Not for Resale

A.1.4.2 An equivalent method of protection is one that provides an equal or greater level of safety. It is not a waiver or deletion of a *Code* requirement.

A.3.2.1 Approved. The National Fire Protection Association does not approve, inspect, or certify any installations, procedures, equipment, or materials; nor does it approve or evaluate testing laboratories. In determining the acceptability of installations, procedures, equipment, or materials, the authority having jurisdiction may base acceptance on compliance with NFPA or other appropriate standards. In the absence of such standards, said authority may require evidence of proper installation, procedure, or use. The authority having jurisdiction may also refer to the listings or labeling practices of an organization that is concerned with product evaluations and is thus in a position to determine compliance with appropriate standards for the current production of listed items.

A.3.2.2 Authority Having Jurisdiction (AHJ). The phrase "authority having jurisdiction," or its acronym AHJ, is used in NFPA documents in a broad manner, since jurisdictions and approval agencies vary, as do their responsibilities. Where public safety is primary, the authority having jurisdiction may be a federal, state, local, or other regional department or individual such as a fire chief; fire marshal; chief of a fire prevention bureau, labor department, or health department; building official; electrical inspector; or others having statutory authority. For insurance purposes, an insurance inspection department, rating bureau, or other insurance company representative may be the authority having jurisdiction. In many circumstances, the property owner or his or her designated agent assumes the role of the authority having jurisdiction; at government installations, the commanding officer or departmental official may be the authority having jurisdiction.

A.3.2.3 Code. The decision to designate a standard as a "code" is based on such factors as the size and scope of the document, its intended use and form of adoption, and whether it contains substantial enforcement and administrative provisions.

A.3.2.5 Listed. The means for identifying listed equipment may vary for each organization concerned with product evaluation; some organizations do not recognize equipment as listed unless it is also labeled. The authority having jurisdiction should utilize the system employed by the listing organization to identify a listed product.

A.3.3.2 Aisle Accessway. *Aisle accessway* is the term used for the previously unnamed means of egress component leading to an aisle or other means of egress. For example, circulation space between parallel rows of seats having a width of 305 mm to 610 mm (12 in. to 24 in.) and a length not exceeding 30 m (100 ft) is an aisle accessway. Some of the circulation space between tables or seats in restaurants might be considered aisle accessway.

Depending on the width of aisle accessway, which is influenced by its length and expected utilization, the movement of a person through the aisle accessway might require others to change their individual speed of movement, alter their postures, move their chairs out of the way, or proceed ahead of the person.

A.3.3.6 Area of Refuge. An area of refuge has a temporary use during egress. It generally serves as a staging area that provides relative safety to its occupants while potential emergencies are assessed, decisions are made, and mitigating activities are begun. Taking refuge within such an area is thus a stage of the total egress process; a stage between egress from the immediately threatened area and egress to a public way.

An area of refuge might be another building connected by a bridge or balcony, a compartment of a subdivided story, an elevator lobby, or an enlarged story-level exit stair landing. An area of refuge is accessible by means of horizontal travel or, as a minimum, via an accessible route meeting the requirements of ICC/ANSI A117.1, *American National Standard for Accessible and Usable Buildings and Facilities*.

This *Code* recognizes any floor in a building protected throughout by an approved, supervised automatic sprinkler system as an area of refuge. This recognition acknowledges the ability of a properly designed and functioning automatic sprinkler system to control a fire at its point of origin and to limit the production of toxic products to a level that is not life threatening.

The requirement for separated rooms or spaces can be met on an otherwise undivided floor by enclosing the elevator lobby with ordinary glass or other simple enclosing partitions that are smoke resisting. For some occupancies, one accessible room or space is permitted.

A.3.3.9.1 Smoke Barrier. A smoke barrier might be vertically or horizontally aligned, as are a wall, a floor, or a ceiling assembly. A smoke barrier might or might not have a fire resistance rating.

A.3.3.9.2 Thermal Barrier. Finish ratings, as published in the UL *Fire Resistance Directory,* are one way of determining thermal barrier.

A.3.3.10 Birth Center. A birth center is a low-volume service for healthy, childbearing women and their families who are capable of ambulation in the event of fire or fire-threatening events. Birth center mothers and babies have minimal analgesia, receive no general or regional anesthesia, and are capable of ambulation, even in second-stage labor.

A.3.3.12 Building. The term *building* is to be understood as though followed by the words *or portions thereof. (See also Structure, A.3.3.103).*

A.3.3.12.1 Apartment Building. The *Code* specifies that a building that contains three or more living units is considered an apartment building. Townhouse units are considered to be apartment buildings if there are three or more units in their building. The type of wall required between units in order to classify them as separate buildings is normally established by the authority having jurisdiction. Where the units are separated by a wall of sufficient fire resistance and structural integrity to be considered as separate buildings, the provisions for dwellings apply to each townhouse. Condominium status is a form of ownership, not occupancy; for example, there are condominium warehouses, condominium apartments, and condominium offices.

A.3.3.12.3 Covered Mall Building. Covered mall buildings are occupied primarily by mercantile occupancies. However, they can include other occupancies such as drinking and dining establishments, entertainment and amusement facilities, offices, and similar uses that are incidental to the primary use of the building.

A.3.3.12.4 Existing Building. The deciding factor in determining whether a building is existing is not when the building was designed or when construction was started but rather the

Copyright National Fire Protection Association
Provided by IHS under license with NFPA
No reproduction or networking permitted without license from IHS
Not for Resale

date plans were approved for construction by the appropriate authority having jurisdiction.

A.3.3.12.5 Flexible Plan and Open Plan Educational or Day-Care Building. Flexible plan buildings have movable corridor walls and movable partitions of full-height construction with doors leading from rooms to corridors. Open plan buildings have rooms and corridors delineated by tables, chairs, desks, bookcases, counters, low-height partitions, or similar furnishings. It is the intent that low-height partitions not exceed 1.5 m (5 ft).

A.3.3.12.6 High-Rise Building. It is the intent of this definition that, in determining the level from which the highest occupiable floor is to be measured, the enforcing agency should exercise reasonable judgment, including consideration of overall accessibility to the building by fire department personnel and vehicular equipment. Where a building is situated on a sloping terrain and there is building access on more than one level, the enforcing agency might select the level that provides the most logical and adequate fire department access.

A.3.3.12.7 Special Amusement Building. These structures include amusements such as a haunted house, a roller coaster–type ride within a building, a multilevel play structure within a building, a submarine ride, and similar amusements where the occupants are not in the open air.

A.3.3.15 Class B Mercantile Occupancy. Mezzanines are permitted in Class B mercantile occupancies. If more than three floors, excluding mezzanines, are used, the mercantile occupancy is Class A, regardless of area.

A.3.3.17 Common Path of Travel. Common path of travel is measured in the same manner as travel distance but terminates at that point where two separate and distinct routes become available. Paths that merge are common paths of travel.

A.3.3.24 Electroluminescent. This light source is typically contained inside a device.

A.3.3.29 Evacuation Capability. The evacuation capability of the residents and staff is a function of both the ability of the residents to evacuate and the assistance provided by the staff. It is intended that the evacuation capability be determined by the procedure acceptable to the authority having jurisdiction. It is also intended that the timing of drills, the rating of residents, and similar actions related to determining the evacuation capability be performed by persons approved by or acceptable to the authority having jurisdiction. The evacuation capability can be determined by use of the definitions in Section 3.3, the application of NFPA 101A, *Guide on Alternative Approaches to Life Safety*, or a program of drills (timed).

Where drills are used in determining evacuation capability, it is suggested that the facility conduct and record fire drills six times per year on a bimonthly basis, with a minimum of two drills conducted during the night when residents are sleeping, and that the facility conduct the drills in consultation with the authority having jurisdiction. Records should indicate the time taken to reach a point of safety, date and time of day, location of simulated fire origin, escape paths used, and comments relating to residents who resisted or failed to participate in the drills.

Translation of drill times to evacuation capability is determined as follows:

(1) 3 minutes or less — prompt
(2) Over 3 minutes but not in excess of 13 minutes — slow
(3) More than 13 minutes — impractical

Evacuation capability, in all cases, is based on the time of day or night when evacuation of the facility would be most difficult, for example, when residents are sleeping or fewer staff are present.

Evacuation capability is considered slow if the following conditions are met:

(1) All residents are able to travel to centralized dining facilities without continuous staff assistance.
(2) There is continuous staffing whenever there are residents in the facility.

A.3.3.31 Existing. See 3.3.12.4.

A.3.3.32 Exit. Exits include exterior exit doors, exit passageways, horizontal exits, exit stairs, and exit ramps. In the case of a stairway, the exit incudes the stair enclosure, the door to the stair enclosure, stairs and landings inside the enclosure, the door from the stair enclosure to the outside or to the level of exit discharge, and any exit passageway and its associated doors if such are provided so as to discharge the stair directly to the outside. In the case of a door leading directly from the street floor to the street or open air, the exit comprises only the door.

Doors of small individual rooms, as in hotels, although constituting exit access from the room, are not referred to as exits except where they lead directly to the outside of the building from the street floor.

A.3.3.32.1 Horizontal Exit. Horizontal exits should not be confused with egress through doors in smoke barriers. Doors in smoke barriers are designed only for temporary protection against smoke, whereas horizontal exits provide protection against serious fire for a relatively long period of time in addition to providing immediate protection from smoke.

A.3.3.38.2 Limited Care Facility. Limited care facilities and residential board and care occupancies provide care to people with physical and mental limitations. However, the goals and programs of the two types of occupancies differ greatly. The requirements in this *Code* for limited care facilities are based on the assumption that they are medical facilities, that they provide medical care and treatment, and that the patients are not trained to respond to a fire alarm; that is, the patients do not participate in fire drills but rather await rescue.

The requirements for residential board and care occupancies are based on the assumption that the residents are provided with personal care and activities that foster continued independence, that the residents are encouraged and taught to overcome their limitations, and that most residents, including all residents in prompt and slow homes, are trained to respond to fire drills, to the extent they are able.

A.3.3.46.1 Gross Floor Area. Where the term *floor area* is used, it should be understood to be gross floor area unless otherwise specified.

A.3.3.61 Hotel. So-called apartment hotels should be classified as hotels because they are potentially subject to the same transient occupancy as hotels. Transients are those who occupy accommodations for less than 30 days.

A.3.3.62.1 Externally Illuminated. The light source is typically a dedicated incandescent or fluorescent source.

A.3.3.62.2 Internally Illuminated. The light source is typically incandescent, fluorescent, electroluminescent, photoluminescent, light-emitting diodes, or self-luminous.

Copyright National Fire Protection Association
Provided by IHS under license with NFPA
No reproduction or networking permitted without license from IHS
Not for Resale

A.3.3.69 Means of Egress. A means of egress comprises the vertical and horizontal travel and includes intervening room spaces, doorways, hallways, corridors, passageways, balconies, ramps, stairs, elevators, enclosures, lobbies, escalators, horizontal exits, courts, and yards.

A.3.3.74.2 Assembly Occupancy. Assembly occupancies might include the following:

(1) Armories
(2) Assembly halls
(3) Auditoriums
(4) Bowling lanes
(5) Club rooms
(6) College and university classrooms, 50 persons and over
(7) Conference rooms
(8) Courtrooms
(9) Dance halls
(10) Drinking establishments
(11) Exhibition halls
(12) Gymnasiums
(13) Libraries
(14) Mortuary chapels
(15) Motion picture theaters
(16) Museums
(17) Passenger stations and terminals of air, surface, underground, and marine public transportation facilities
(18) Places of religious worship
(19) Pool rooms
(20) Recreation piers
(21) Restaurants
(22) Skating rinks
(23) Special amusement buildings regardless of occupant load
(24) Theaters

Assembly occupancies are characterized by the presence or potential presence of crowds with attendant panic hazard in case of fire or other emergency. They are generally open or occasionally open to the public, and the occupants, who are present voluntarily are not ordinarily subject to discipline or control. Such buildings are ordinarily occupied by able-bodied persons and are not used for sleeping purposes. Special conference rooms, snack areas, and other areas incidental to, and under the control of, the management of other occupancies, such as offices, fall under the 50-person limitation.

Restaurants and drinking establishments with an occupant load of fewer than 50 persons should be classified as mercantile occupancies.

A.3.3.74.3 Business Occupancy. Business occupancies include the following:

(1) Air traffic control towers (ATCTs)
(2) City halls
(3) College and university instructional buildings, classrooms under 50 persons, and instructional laboratories
(4) Courthouses
(5) Dentists' offices
(6) Doctors' offices
(7) General offices
(8) Outpatient clinics, ambulatory
(9) Town halls

Doctors' and dentists' offices are included in this category unless of such character as to be classified as ambulatory health care occupancies.

Birth centers should be classified as business occupancies if occupied by fewer than four patients, not including infants, at any one time; not providing sleeping facilities for four or more occupants; and not providing treatment procedures that render four or more patients, not including infants, incapable of self-preservation at any one time. For birth centers occupied by patients not meeting these parameters, see the requirements applicable to health care occupancies.

Service facilities common to city office buildings such as newsstands, lunch counters serving fewer than 50 persons, barber shops, and beauty parlors are included in the business occupancy group.

City halls, town halls, and courthouses are included in this occupancy group insofar as their principal function is the transaction of public business and the keeping of books and records. Insofar as they are used for assembly purposes, they are classified as assembly occupancies.

A.3.3.74.4 Day-Care Occupancy. Day-care occupancies include the following:

(1) Adult day-care occupancies, except where part of a health care occupancy
(2) Child day-care occupancies
(3) Day-care homes
(4) Kindergarten classes that are incidental to a child day-care occupancy
(5) Nursery schools

In areas where public schools offer only half-day kindergarten programs, many child day-care occupancies offer state-approved kindergarten classes for children who need full-day care. Because these classes are normally incidental to the day-care occupancy, the requirements of the day-care occupancy should be followed.

A.3.3.74.5 Detention and Correctional Occupancy. Detention and correctional occupancies include the following:

(1) Adult and juvenile substance abuse centers
(2) Adult and juvenile work camps
(3) Adult community residential centers
(4) Adult correctional institutions
(5) Adult local detention facilities
(6) Juvenile community residential centers
(7) Juvenile detention facilities
(8) Juvenile training schools

A.3.3.74.6 Educational Occupancy. Educational occupancies include the following:

(1) Academies
(2) Kindergartens
(3) Schools

An educational occupancy is distinguished from an assembly occupancy in that the same occupants are regularly present in an educational occupancy.

A.3.3.74.7 Health Care Occupancy. Health care occupancies include the following:

(1) Ambulatory health care facilities
(2) Hospitals
(3) Limited care facilities
(4) Nursing homes

Copyright National Fire Protection Association
Provided by IHS under license with NFPA
No reproduction or networking permitted without license from IHS
Not for Resale

Occupants of health care occupancies typically include those with physical or mental illness, disease, or infirmity. They also include infants, convalescents, or infirm aged persons.

A.3.3.74.8 Industrial Occupancy. Industrial occupancies include the following:

(1) Dry cleaning plants
(2) Factories of all kinds
(3) Food processing plants
(4) Gas plants
(5) Hangars (for servicing/maintenance)
(6) Laundries
(7) Power plants
(8) Pumping stations
(9) Refineries
(10) Sawmills
(11) Telephone exchanges

In evaluating the appropriate classification of laboratories, the authority having jurisdiction should treat each case individually, based on the extent and nature of the associated hazards. Some laboratories are classified as occupancies other than industrial; for example, a physical therapy laboratory or a computer laboratory.

A.3.3.74.8.1 General Industrial Occupancy General industrial occupancies include multistory buildings where floors are occupied by different tenants or buildings that are suitable for such occupancy and are therefore subject to possible use for types of industrial processes with a high employee density.

A.3.3.74.8.2 High-Hazard Industrial Occupancy. A high-hazard occupancy includes occupancies where gasoline and other flammable liquids are handled, used, or stored under such conditions that involve possible release of flammable vapors; where grain dust, wood flour or plastic dusts, aluminum or magnesium dust, or other explosive dusts are produced; where hazardous chemicals or explosives are manufactured, stored, or handled; where cotton or other combustible fibers are processed or handled under conditions that might produce flammable flyings; and where other situations of similar hazard exist.

A.3.3.74.9 Mercantile Occupancy. Mercantile occupancies include the following:

(1) Auction rooms
(2) Department stores
(3) Drugstores
(4) Restaurants with fewer than 50 persons
(5) Shopping centers
(6) Supermarkets

Office, storage, and service facilities incidental to the sale of merchandise and located in the same building should be considered part of the mercantile occupancy classification.

A.3.3.74.11 Residential Occupancy. The following categories of residential occupancies are treated as separate occupancies:

(1) One- and two-family dwellings
(2) Lodging or rooming houses
(3) Hotels, motels, and dormitories
(4) Apartment buildings

A.3.3.74.12 Residential Board and Care Occupancy. The following are examples of facilities classified as residential board and care occupancies:

(1) A group housing arrangement for physically or mentally handicapped persons who normally attend school in the community, attend worship in the community, or otherwise use community facilities
(2) A group housing arrangement for physically or mentally handicapped persons who are undergoing training in preparation for independent living, for paid employment, or for other normal community activities
(3) A group housing arrangement for the elderly that provides personal care services but that does not provide nursing care
(4) Facilities for social rehabilitation, alcoholism, drug abuse, or mental health problems and that contain a group housing arrangement and that provide personal care services but do not provide acute care
(5) Assisted living facilities
(6) Other group housing arrangements that provide personal care services but not nursing care

A.3.3.74.13 Storage Occupancy. Storage occupancies include the following:

(1) Barns
(2) Bulk oil storage
(3) Cold storage
(4) Freight terminals
(5) Grain elevators
(6) Hangars (for storage only)
(7) Parking structures
(8) Stables
(9) Truck and marine terminals
(10) Warehouses

Storage occupancies are characterized by the presence of relatively small numbers of persons in proportion to the area.

A.3.3.81 Personal Care. Personal care involves responsibility for the safety of a resident while inside the building. Personal care might include daily awareness by management of a resident's functioning and whereabouts, responsibility for making and reminding a resident of appointments, the ability and readiness for intervention in the event of a resident experiencing a crisis, supervision in the areas of nutrition and medication, and actual provision of transient medical care.

A.3.3.82 Photoluminescent. The light source is considered internally illuminated.

A.3.3.88.1 Festival Seating. Festival seating describes situations in assembly occupancies where live entertainment events are held that are expected to result in overcrowding and high audience density that can compromise public safety. It is not the intent to apply the term *festival seating* to exhibitions; sports events; dances; conventions; and bona fide political, religious, and educational events. Assembly occupancies with 1.4 m^2 (15 ft^2) or more per persons should not be considered festival seating.

A.3.3.90 Self-Luminous. An example of a self-contained power source is tritium gas. Batteries do not qualify as a self-contained power source. The light source is typically contained inside the device.

A.3.3.91 Self-Preservation (Day-Care Occupancy). Examples of clients who are incapable of self-preservation include infants, clients who are unable to use stairs because of confinement to a wheelchair or other physical disability, and clients who cannot follow directions or a group to the outside of a facility due to mental or behavioral disorders. It is the intent of

Copyright National Fire Protection Association
Provided by IHS under license with NFPA
No reproduction or networking permitted without license from IHS
Not for Resale

this *Code* to classify children under the age of 24 months as incapable of self-preservation. Examples of direct intervention by staff members include carrying a client, pushing a client outside in a wheelchair, and guiding a client by direct hand-holding or continued bodily contact. If clients cannot exit the building by themselves with minimal intervention from staff members, such as verbal orders, classification as incapable of self-preservation should be considered.

A.3.3.95 Smoke Compartment. In the provision of smoke compartments using the outside walls or the roof of a building, it is not intended that outside walls or roofs or any openings therein be capable of resisting the passage of smoke.

A.3.3.96 Smoke Partition. A smoke partition is not required to have a fire resistance rating.

A.3.3.97 Smokeproof Enclosure. For further guidance, see the following publications:

(1) ASHRAE *Handbook and Product Directory — Fundamentals*
(2) *Design of Smoke Management Systems*, by Klote and Milke
(3) NFPA 105, *Recommended Practice for the Installation of Smoke Control Door Assemblies*

A.3.3.101.1 Occupiable Story. Stories used exclusively for mechanical equipment rooms, elevator penthouses, and similar spaces are not occupiable stories.

A.3.3.102 Street Floor. Where, due to differences in street levels, there are two or more stories accessible from the street, each is a street floor. Where there is no floor level within the specified limits for a street floor above or below ground level, the building has no street floor.

A.3.3.103 Structure. The term *structure* is to be understood as though followed by the words *or portion thereof. (See also Building, A.3.3.12.)*

A.3.3.103.2 Open Structure. Open structures are often found in oil refining, chemical processing, or power plants. Roofs or canopies without enclosing walls are not considered an enclosure.

A.3.3.103.4 Underground Structure. In determining openings in exterior walls, doors or access panels are permitted to be included. Windows are also permitted to be included if they are openable or provide a breakable glazed area.

A.4.1.4 Although not considered as a residential occupancy in the *Life Safety Code*, residential board and care occupancies are addressed in this *Code* as residential occupancies along with dwellings, lodging/rooming houses, apartment buildings, and hotels/dormitories.

A.4.2.2.3 The ordinary-hazard classification represents the conditions found in most buildings and is the basis for the general requirements of this *Code*.

The fear of poisonous fumes or explosions is necessarily a relative matter to be determined on a judgment basis. All smoke contains some toxic fire gases, but, under conditions of ordinary hazard, there should be no unduly dangerous exposure during the period necessary to escape from the fire area, assuming there are proper exits.

A.4.2.2.4 High-hazard contents might include occupancies where flammable liquids are handled or used or are stored under conditions involving possible release of flammable vapors; where grain dust, wood flour or plastic dust, aluminum or magnesium dust, or other explosive dusts might be produced; where hazardous chemicals or explosives are manufactured, stored, or handled; where cotton or other combustible fibers are processed or handled under conditions producing flammable flyings; and other situations of similar hazard.

A.5.1 Portable ladders, rope fire escapes, and similar emergency escape devices might have a useful function in facilitating escape from burning buildings that lack adequate exits of the stair or other standard type, but they are not the equivalent of standard exits, and their use is not in any way recognized by this *Code* as satisfying the requirements for means of egress. Furthermore, many such devices are of types quite unsuited to use by aged or infirm persons or by small children. Therefore, such devices might give a false sense of security and should not be used as an excuse for not providing standard exit facilities.

A.5.1.1.1 The purpose of a tight-fitting corridor door is to control the flow of smoke. The tight fit can be achieved by close attention to tolerances or by supplemental means. The "crack dimensions" should not exceed the maximum tolerances allowed by NFPA 80, *Standard for Fire Doors and Fire Windows. (See also NFPA 105, Recommended Practice for the Installation of Smoke Control Door Assemblies.)*

A.5.1.1.1.3(A) A typical nurses' station, allowed by Exception No. 3 to be open to the corridor, would normally contain one or more of the following, with associated furniture and furnishings:

(1) Charting area
(2) Clerical area
(3) Nourishment station
(4) Storage of small amounts of medications, medical equipment and supplies, clerical supplies, and linens
(5) Patient monitoring and communication equipment

A.5.1.1.1.3(B) It is this *Code*'s intent that there be no required fire resistance or area limitations for vision panels in corridor walls and doors.

A.5.1.1.1.3(C) While it is recognized that closed doors serve to maintain tenable conditions in a corridor and adjacent patient rooms, such doors, which under normal or fire conditions are self-closing, might create a special hazard for the personal safety of a room occupant. These closed doors might present a problem of delay in discovery of the fire, confining fire products beyond tenable conditions.

Because it is critical that responding staff members are able to immediately identify the specific room involved, it is suggested that approved, automatic smoke detection that is interconnected with the building fire alarm be considered for rooms having doors that are equipped with closing devices. Such detection can be located at any approved point within the room. When activated, the detector needs to provide warning that indicates the specific room of involvement by activation of fire alarm annunciator, nurse call system, or any other device acceptable to the authority having jurisdiction.

A.5.1.1.1.3(C)(1) Gasketing of doors should not be necessary to achieve resistance to the passage of smoke if the door is relatively tight fitting.

A.5.1.1.2.1(D) The exception to 5.1.1.2.1(D) intends that rooms opening onto the exit passageway include building service elevators, elevator machine rooms, electrical rooms, telephone rooms, janitor closets, restrooms, and other similar normally unoccupied spaces.

Copyright National Fire Protection Association
Provided by IHS under license with NFPA
No reproduction or networking permitted without license from IHS
Not for Resale

A.5.1.1.2.3 This provision prohibits the use of exit enclosures for storage or for installation of equipment not necessary for safety. Occupancy is prohibited other than for egress, refuge, and access. The intent is that the exit enclosure essentially be "sterile" with respect to fire safety hazards.

A.5.1.2 For the purpose of this requirement, projections include devices such as lighting equipment, emergency signaling equipment, environmental controls and equipment, security devices, signs, and decorations that are typically limited in area.

A.5.1.3.4 The foreseeable conditions are those likely to be present at the location of the walking surface during the use of the building or area. A foreseeable condition of a swimming pool deck, for example, is that it is likely to be wet.

Regarding the slip resistance of treads, it should be recognized that, when walking up or down stairs, a person's foot exerts a smaller horizontal force against treads than is exerted when walking on level floors. Therefore, materials used for floors that are acceptable as slip resistant (as described by ASTM F 1637, *Standard Practice for Safe Walking Surfaces*), provide adequate slip resistance where used for stair treads. Such slip resistance includes the important leading edges of treads, the part of the tread that the foot first contacts during descent, which is the most critical direction of travel. If stair treads are wet, there is an increased danger of slipping, just as there is an increased danger of slipping on wet floors of similar materials. A small wash or drainage slope on exterior stair treads is therefore recommended to shed water. (See Templer, J. A., *The Staircase: Studies of Hazards, Falls, and Safer Design*, Cambridge, MA: MIT Press, 1992.)

A.5.1.4.2 Aside from the problems created for persons who are mobility impaired, small changes of elevation in floors are best avoided because of the increased occurrence of missteps where the presence of single steps, a series of steps, or a ramp is not readily apparent. While small changes of elevation pose significant risk of falling in the case of individual movement, they are even more undesirable where crowds traverse the area.

A contrasting marking stripe on each stepping surface might be helpful at the nosing or leading edge such that the location of each step is readily apparent, especially when viewed in descent. Such stripes should be no less than 25 mm (1 in.) but not exceed 51 mm (2 in.) in width. Other methods could include a relatively higher level of lighting, contrasting colors, contrasting textures, especially prominent handrails, warning signs, a combination thereof, or other similar means. The construction or application of marking stripes should be such that slip resistance is consistent over the walking surface and no tripping hazard is created. *(See also A.5.2.2.3.3.)* Depending on the distractions of the surroundings, the familiarity of users with a particular small change of level, and especially the number of people that might be in a group traversing the change of level (thereby reducing visibility of the level changes), a strong argument can be made for the elimination of steps and ramps that might pose a risk of missteps.

A.5.2.1.1.3 Although 5.2.1.1.3 and 5.2.1.5.1 permit locking of means of egress doors if a building is not considered occupied, this *Code* does not intend to permit occupants to be locked in buildings or building spaces beyond their control except for detention and correctional occupancies and health care occupancies.

A.5.2.1.2.1 Figure A.5.2.1.2.1(a) and Figure A.5.2.1.2.1(b) illustrate the method of measuring door width for purposes of calculating egress capacity.

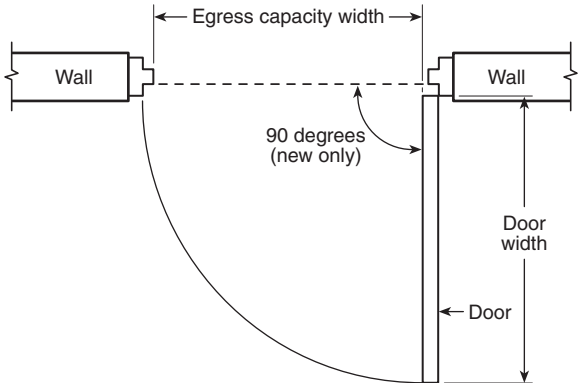

FIGURE A.5.2.1.2.1(a) Door Width — Egress Capacity.

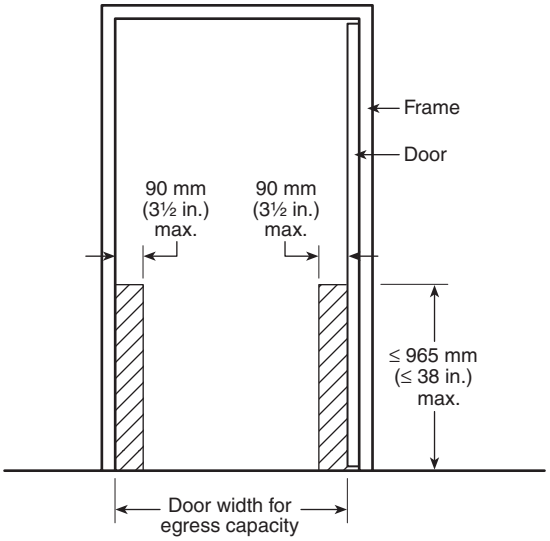

FIGURE A.5.2.1.2.1(b) Door Width — Egress Capacity with Permitted Obstructions.

A.5.2.1.2.2 Figure A.5.2.1.2.2(a) and Figure A.5.2.1.2.2(b) illustrate the method of measuring clear width for doors. Where a chapter requires a door width — for example, of not less than 915 mm (36 in.) — this requirement can be met by a door leaf of the minimum specified width if the term *clear width* does not appear as part of the minimum width requirement. A pair of cross-corridor doors subject to such a requirement would be judged under the following criteria:

(1) Each door leaf is required to be not less than 915 mm (36 in.) in width.
(2) The pair of doors is required to provide sufficient, clear, unobstructed width (which will be less than the door leaf width measurement) to handle its assigned occupant load, based on a calculation using the appropriate egress capacity factor in Table 5.3.3.1.

Copyright National Fire Protection Association
Provided by IHS under license with NFPA
No reproduction or networking permitted without license from IHS
Not for Resale

Where swinging doors do not open at least 90 degrees, the clear width of the doorway should be measured between the face of the door and the stop.

It is not the intent to regulate projections above the 2030-mm (80-in.) height.

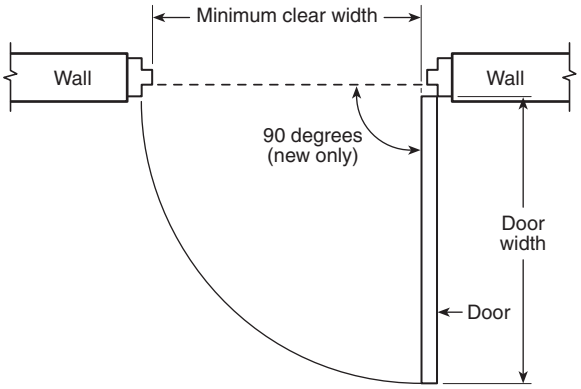

FIGURE A.5.2.1.2.2(a) Minimum Clear Width.

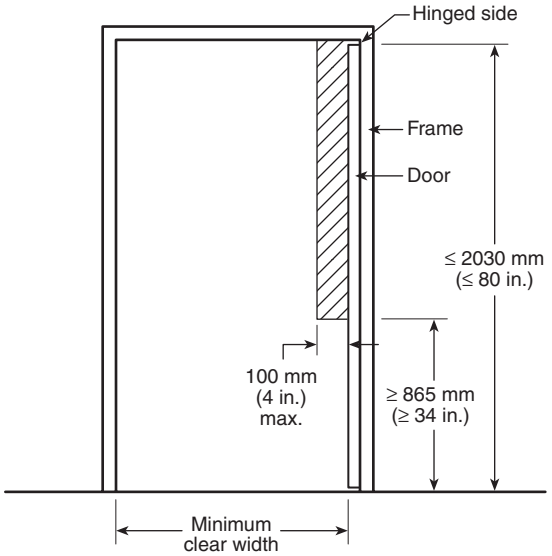

FIGURE A.5.2.1.2.2(b) Minimum Clear Width with Permitted Obstructions.

A.5.2.1.4.1 Where doors are subject to two-way traffic, or where their opening might interfere with pedestrian traffic, an appropriately located vision panel can reduce the chance of accidents.

Swinging doors in horizontal or vertical rolling partitions should be permitted in a means of egress where they comply with the following:

(1) The door or doors comply with 5.2.1.4.
(2) The partition in which the doors are mounted complies with the applicable fire protection rating and closes upon smoke detection or power failure at a speed not exceeding 230 mm (9 in.) per second and not less than 150 mm (6 in.) per second.
(3) The doors mounted in the partition are self- or automatic-closing in accordance with 5.2.1.8.

A.5.2.1.4.5 This paragraph is not intended to apply to the swing of cross-corridor doors such as smoke barrier doors and horizontal exits.

A.5.2.1.5.3 It is intended that the reentry provisions apply only to enclosed exit stairs, not to outside stairs. This arrangement makes it possible to leave the stairway at such floor should the fire render the lower part of the stair unusable during egress or should the occupants seek refuge on another floor.

A.5.2.1.5.5 Examples of devices that might be arranged to release latches include knobs, levers, and panic bars. This requirement can be satisfied by the use of conventional types of hardware, whereby the door is released by turning a lever, knob, or handle or by pushing against a panic bar, but not by unfamiliar methods of operation such as a blow to break glass. The operating devices should be capable of being operated with one hand and should not require tight grasping, tight pinching, or twisting of the wrist to operate.

Examples of devices, as allowed by the exception, that, when used with a latch, can be arranged to require not more than one additional releasing operation include night latches, dead bolts, and security chains.

A.5.2.1.5.7 Examples of devices prohibited by this requirement include locks, padlocks, hasps, bars, chains, or combinations thereof.

A.5.2.1.6.1(C) The purpose of the audible signal at the door is to assure those attempting to egress that the system is functional.

A.5.2.1.6.1(D) In the event that the authority having jurisdiction has allowed increased operation time, the sign should reflect the appropriate time.

A.5.2.1.6.3 The locking provisions applicable to detention and correctional occupancies were written based on the assumption that detention and correctional facilities, or those portions of facilities having such occupancy, are provided with 24-hour staffing. In areas where all locks cannot be unlocked remotely in compliance with 5.2.1.6.3.2, staff needs to be within three floors or a 91-m (300-ft) horizontal distance of the access door of each resident housing area. In addition, for Use Condition III, Use Condition IV, and Use Condition V, the arrangement needs to be such that, within 2 minutes of alarm, the staff involved starts the release of locks necessary for emergency evacuation or rescue and initiates other necessary emergency actions.

A.5.2.1.6.3.2 A remote position is generally a control point where a number of doors can be unlocked simultaneously, either mechanically or electrically. In areas with a number of sleeping rooms, it is impractical for attendants to unlock doors individually. Doors in an exit should be unlocked prior to unlocking sleeping room doors. Sight and sound supervision of resident living areas can be by camera and communication systems.

This section of the *Code* does not intend to prohibit Use Condition V facilities, nor does it intend to limit Use Condition V facilities to 10 manually released locks.

A.5.2.1.8.1 Examples of doors designed to normally be kept closed include those to a stair enclosure or horizontal exit.

Copyright National Fire Protection Association
Provided by IHS under license with NFPA
No reproduction or networking permitted without license from IHS
Not for Resale

A.5.2.1.9.1 An example of the type of door addressed by 5.2.1.9.1 is one that is actuated by a motion-sensing device upon the approach of a person.

A single power-operated door leaf located within a two-leaf opening might alone not provide more than 760 mm (30 in.) of clear width in the emergency break-out mode, but where both leaves are broken out to become side-hinged, Exception No. 2 allows the required egress width to be provided by the width of the entire opening.

A.5.2.2.2.4 If properly designed and constructed, stairs with winders are not necessarily more dangerous than other stairs. Attention to the following factors will help to make winders generally more effective for egress and safety.

Handrails should be continuous from story to story, without breaks at newel posts. Indeed, handrails located a greater than normal distance from the inner turn of winders can improve safety by constraining stair users to walk on the portion of the treads providing deeper treads, with at least 280 mm (11 in.) of depth. Combinations of straight flights and winders are best arranged with winders occurring only below the straight flight, because the winders provide larger tread dimensions over much of their width than do typical treads on straight flights. A descending person will thus be unlikely to experience a reduction of tread depths during descent, a condition of nonuniformity that is best avoided.

A.5.2.2.3.3 The tripping hazard referred to in 5.2.2.3.3 occurs especially during descent, where the tread walking surface has projections such as strips of high friction materials or lips from metal pan stairs that are not completely filled with concrete or other material. Tread nosings that project over adjacent treads can also be a tripping hazard. ICC/ANSI A117.1, *American National Standard for Accessible and Usable Buildings and Facilities,* illustrates projected nosing configurations that minimize the hazard.

Regarding the slip resistance of treads, it should be recognized that when walking up or down stairs a person's foot exerts a smaller horizontal force against treads than achieved when walking on level floors. Therefore, materials used for floors that are acceptable as slip resistant provide adequate slip resistance where used for stair treads, including the important leading edges of treads, the part of the tread that the foot first contacts during descent, the most critical direction of travel. If stair treads are wet, there might be an increased danger of slipping, just as there might be an increased danger of slipping on wet floors of similar materials. A small wash or drainage slope on exterior stair treads is therefore recommended to shed water *(see The Staircase: Studies of Hazards, Falls, and Safer Design)*. Where environmental conditions (such as illumination levels and directionality or a complex visual field drawing a person's attention away from stair treads) lead to a hazardous reduction in one's ability to perceive stair treads, the treads should be made of a material that permits ready discrimination of the number and position of treads. In all cases, the leading edges of all treads should be readily visible during both ascent and descent. A major factor in injury-producing stair accidents and in the ability to use stairs efficiently in conditions such as egress is the clarity of the stair treads as separate stepping surfaces.

A.5.2.2.3.4 A small drainage slope for stair treads subject to wetting can improve tread slip resistance *(see also A.5.2.2.3.3)*. A consistent slope to a side of the stair, where drainage is possible, might be preferable to a front-to-back slope of the treads. Providing a pitch of 10 mm to 20 mm per meter (⅛ in. to ¼ in. per foot) will aid the shedding of water from a nominally horizontal surface.

A.5.2.2.3.5 Figure A.5.2.2.3.5(a) through Figure A.5.2.2.3.5(d) illustrate the method for measuring riser height and tread depth. Stairs that will be covered with resilient floor coverings might need additional tread depth beyond the minimum specified in the *Code*. Any horizontal projection of resilient covering materials beyond the tread nosing and riser, such as carpet and underlayment, can interfere with users' feet and thereby reduce usable tread depth. At the tread nosing, such resilient covering materials might not be capable of providing stable support for users' feet. Generally, effective tread depth is reduced by the uncompressed thickness of such resilient coverings and might be further reduced over time, if coverings are not well secured, and consequently move forward at the nosings. *[See Figure A.5.2.2.3.5(e).]*

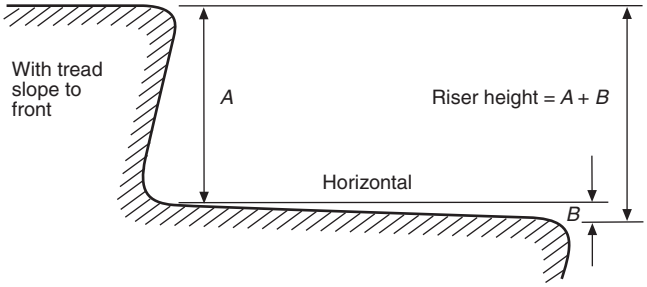

FIGURE A.5.2.2.3.5(a) Riser Measurement with Tread Slope to Front.

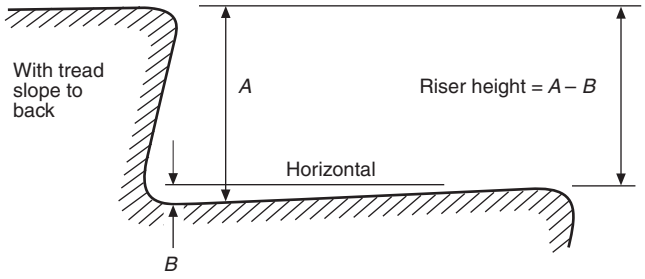

FIGURE A.5.2.2.3.5(b) Riser Measurement with Tread Slope to Back.

A.5.2.2.4.1 Means of egress components that might require guards for protection include stairs, landings, balconies, corridors, passageways, floor or roof openings, ramps, aisles, porches, and mezzanines.

A.5.2.2.4.2 The intent of this provision is to place handrails for the required egress width of stairs only, regardless of the actual width of the stairs. The required egress width is along the natural path of travel to and from the building. Examples of this requirement are shown in Figure A.5.2.2.4.2. The reduced intermediate handrail spacing of 1525 mm (60 in.) along with a handrail height within the permissible height limits permits everyone to reach and grasp one handrail. Except as noted in 5.2.2.4.3 and 5.2.2.4.5, handrails are not required on stair landings.

Copyright National Fire Protection Association
Provided by IHS under license with NFPA
No reproduction or networking permitted without license from IHS
Not for Resale

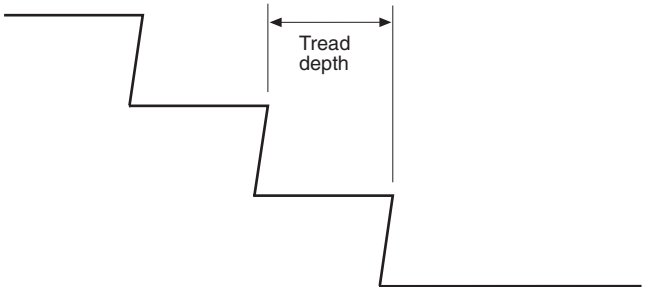

FIGURE A.5.2.2.3.5(c) Tread Depth.

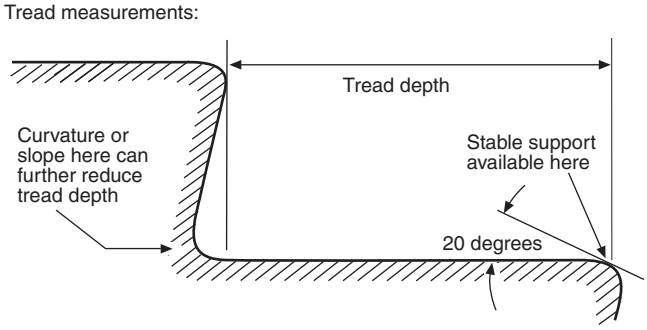

FIGURE A.5.2.2.3.5(d) Tread Measurement with Stable Support at Leading Edge.

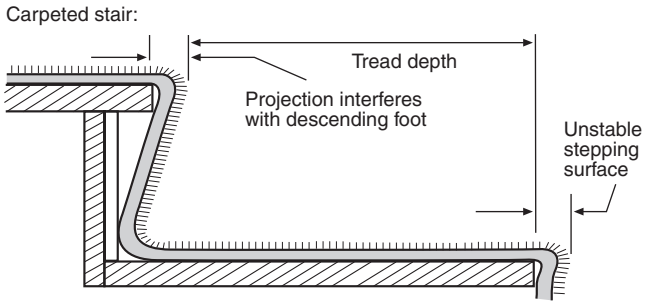

FIGURE A.5.2.2.3.5(e) Tread Measurement with Unstable Stepping Surface at Leading Edge.

A.5.2.2.4.5 Figure A.5.2.2.4.5 illustrates some of the requirements of 5.2.2.4.5.

A.5.2.2.4.5.1 Exception No. 2 permits additional handrails, beyond those required by this *Code*, at heights other than those stipulated. For example, where children under the age of 5 are major users of a facility, an additional handrail at a height in the range of 710 mm to 810 mm (28 in. to 32 in.) might be useful. Generally, children apparently prefer to use, and can effectively use, handrails that are located at shoulder to head height, due to their developmental characteristics and their less developed balance and walking abilities. At 36 months of age, head height ranges from 890 mm to 1015 mm (35 in. to 40 in.); shoulder height averages 735 mm (29 in.). At 60 months of age, head height ranges from 990 mm to 1170 mm (39 in. to 46 in.); shoulder height ranges from 785 mm to 940 mm (31 in. to 37 in.).

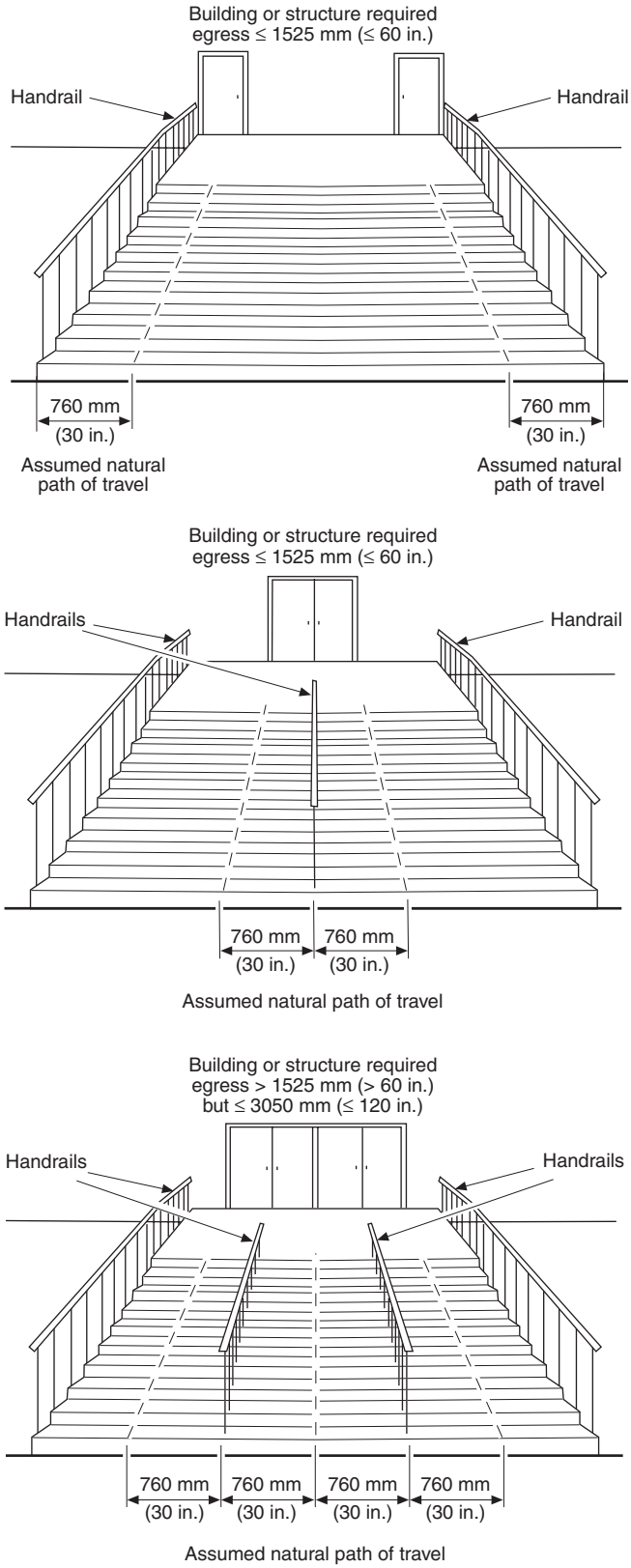

FIGURE A.5.2.2.4.2 Assumed Natural Paths of Travel on Monumental Stairs with Various Handrail Locations.

Copyright National Fire Protection Association
Provided by IHS under license with NFPA
No reproduction or networking permitted without license from IHS
Not for Resale

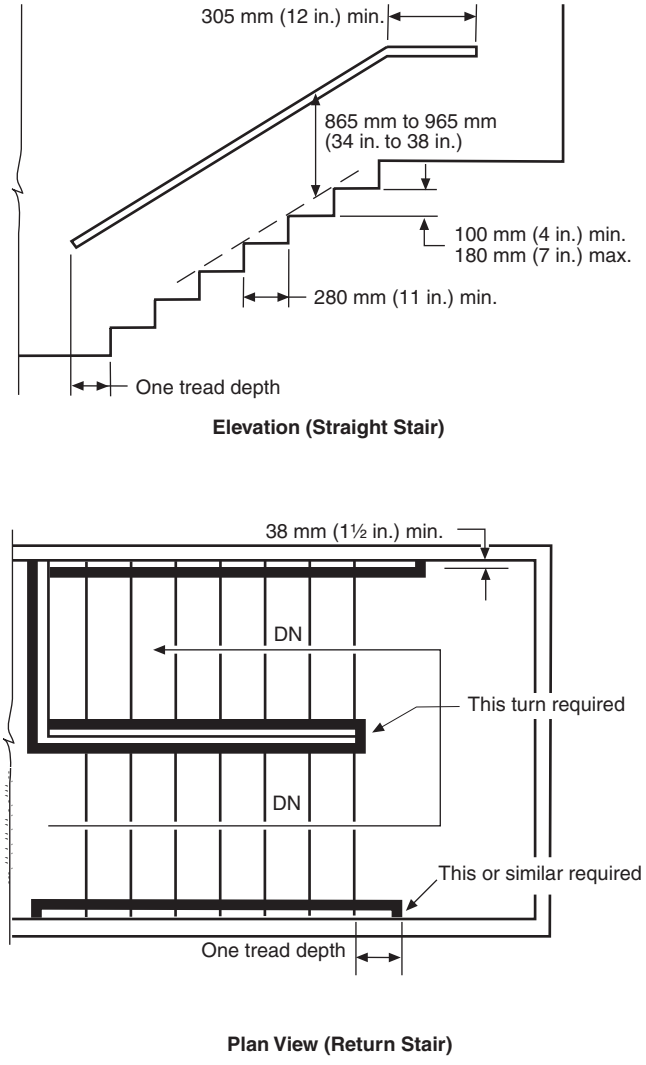

FIGURE A.5.2.2.4.5 Handrail Details.

A.5.2.2.4.5.2 This 38-mm (1½-in.) clearance assumes that the wall and other surfaces adjacent to the handrail are smooth surfaces. Where rough surfaces are used, greater clearances are recommended. In fact, ergonomic studies suggest that 57 mm (2¼ in.) is a more appropriate minimum clearance even to smooth surfaces. Note that the 90-mm (3½-in.) projection requirement does not prohibit such larger clearances; the 90 mm (3½ in.) refers to stair width required for egress capacity for example, not the actual width.

A.5.2.2.4.5.3 Handrails should be designed so they can be grasped firmly with a comfortable grip and so the hand can be slid along the rail without encountering obstructions. The profile of the rail should comfortably match the hand grips. For example, a round profile such as is provided by the simplest round tubing or pipe having an outside diameter of 38 mm to 51 mm (1½ in. to 2 in.) provides good graspability for adults. Factors such as the use of a handrail by small children and the wall-fixing details should be taken into account in assessing handrail graspability. The most functional as well as the most preferred handrail shape and size is circular with a 38-mm (1½-in.) outside diameter (according to research conducted using adults). Handrails used predominantly by children should be designed at the lower end of the permitted dimensional range.

Handrails are one of the most important components of a stair; therefore, design excesses such as oversized wood handrail sections should be avoided unless there is a readily perceived and easily grasped handhold provided. In handrail design, it is useful to remember at all times the effectiveness of a simple round profile that permits some locking action by fingers as they curl around the handrail.

A.5.2.2.4.6.3 Vertical, intermediate rails are preferred to reduce climbability.

A.5.2.2.5.2 The purpose of this provision is to protect the exterior wall of a stairway from fires in other portions of the building. If the exterior wall of the stair is flush with the building exterior wall, the fire would need to travel around 180 degrees in order to impact the stair. This has not been a problem in existing buildings, so no protection is required. However, if the angle of exposure is less than 180 degrees, protection of either the stair wall or building wall is required.

Figure A.5.2.2.5.2(a) through Figure A.5.2.2.5.2(c) illustrate the requirement (assuming nonrated glass on the exterior wall of the stair is used).

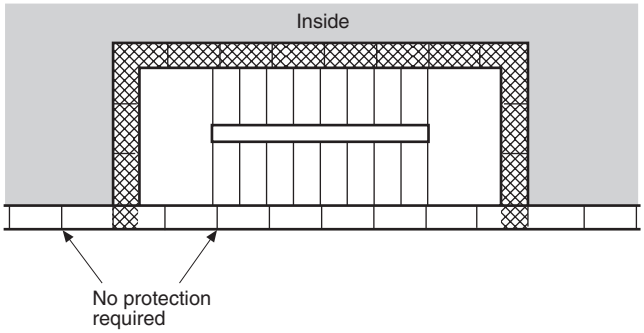

FIGURE A.5.2.2.5.2(a) Stairway with Nonrated Exterior Wall in Same Plane as Building Exterior Wall.

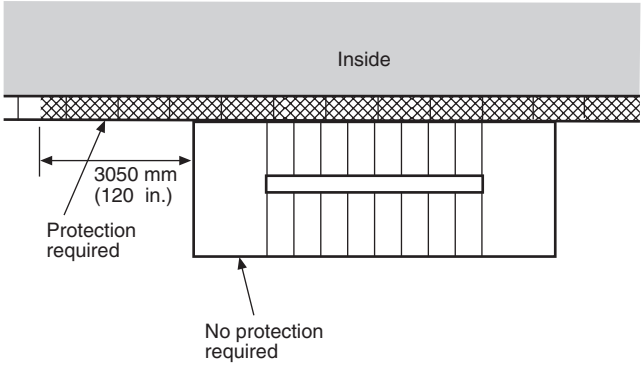

FIGURE A.5.2.2.5.2(b) Stairway with Unprotected Exterior Perimeter Protruding Past Building Exterior Wall.

Copyright National Fire Protection Association
Provided by IHS under license with NFPA
No reproduction or networking permitted without license from IHS
Not for Resale

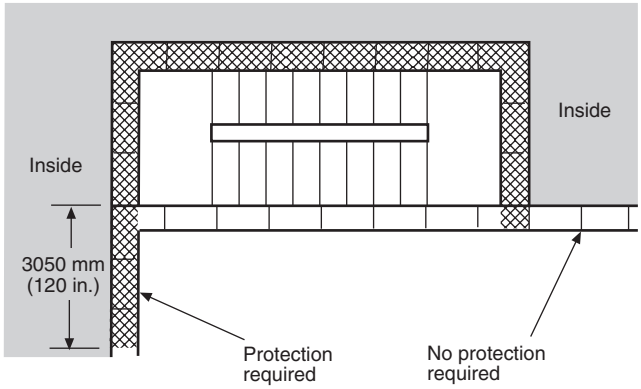

FIGURE A.5.2.2.5.2(c) Stairway with Nonrated Exterior Wall Exposed by Adjacent Exterior Wall of Building.

A.5.2.2.5.3 One example of a usage with the potential to interfere with egress is storage.

A.5.2.2.5.4 This provision is meant to provide vital egress information to the occupants of a building and to fire fighters. To reduce information overload to occupants during emergency egress, a sign indicating the floor level of, and the direction to, the exit discharge can be placed as a separate sign, with another sign indicating the floor level, the terminus of the top and bottom of the stair enclosure, and the identification of the stair.

A.5.2.2.6.5 See A.5.2.2.3.4.

A.5.2.4.1 *Example:* One way to provide the required egress capacity from the upper floor of a department store building 107 m × 60 m (350 ft × 200 ft) (occupant load of 1166 per floor) would be to furnish eight 1120-mm (44-in.) stairs. *[See Figure A.5.2.4.1(a).]*

Assume that this building is divided into two sections by a fire barrier that meets the requirements for a horizontal exit, one 40 m × 60 m (130 ft × 200 ft) and the other 67 m × 60 m (220 ft × 200 ft), with two pairs of 1170-mm (46-in.) double egress doors, with each door providing 1120 mm (44 in.) of clear egress width. *[See Figure A.5.2.4.1(b).]* The smaller section, considered separately, will require the equivalent of three 1120-mm (44-in.) exit stairs, and the larger section will require five such exits. The horizontal exits will serve as one of the three exits required for the smaller section, and two of the five exits required for the larger section. Therefore, only two 1120-mm (44-in.) exit stairs from the smaller section and three 1120-mm (44-in.) exit stairs from the larger section will be required if the exits can be arranged to meet the requirements for the 45-m (150-ft) travel distance allowed from any point in a nonsprinklered building. Thus, the total number of exit stairs required for the building will be five, as compared with eight if no horizontal exit(s) had been provided.

Another option would be the use of two 1420-mm (56-in.) exit stairs from the larger section, which would reduce the total number of stairways required from the floor to four. *[See Figure A.5.2.4.1(c).]* However, if the building were further subdivided by a second fire wall meeting the requirements for a horizontal exit, no further reduction in stairways would be permitted, in order to keep from exceeding the requirement that not more than one-half of exiting be via horizontal exits.

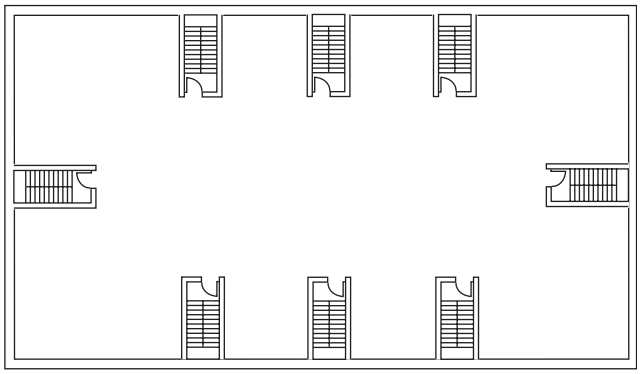

FIGURE A.5.2.4.1(a) Eight Exits, None Via a Horizontal Exit, Required to Provide the Necessary Egress Capacity.

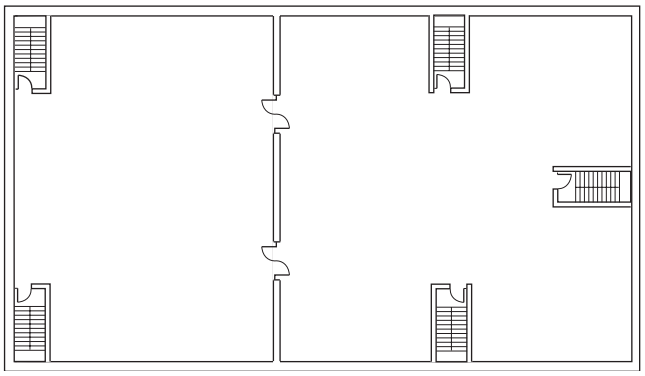

FIGURE A.5.2.4.1(b) Number of Stairs Reduced by Three Through Use of Two Horizontal Exits; Egress Capacity Not Reduced.

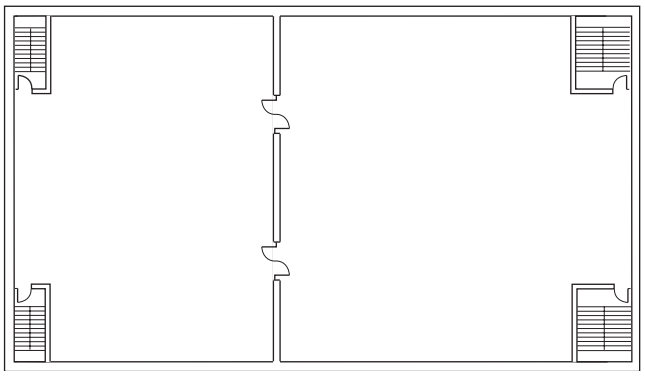

FIGURE A.5.2.4.1(c) Number of Stairs Further Reduced by Widening Stairs in Larger Compartment, But Not to Less Than One-Half the Required Number and Capacity of Exits from That Compartment.

A.5.2.4.4.7 For further information, see NFPA 105, *Recommended Practice for the Installation of Smoke Control Door Assemblies.*

A.5.2.4.4.8 Fusible link-actuated automatic-closing doors do not qualify for use in horizontal exits under these provisions, because smoke might pass through the opening before there

--`,,`-`-`,,`,,`,`,,`---
Copyright National Fire Protection Association
Provided by IHS under license with NFPA
No reproduction or networking permitted without license from IHS
Not for Resale

is sufficient heat to release the hold-open device. Such doors are also objectionable because, once closed, they are difficult to open and would inhibit orderly egress.

A.5.2.5.2 The requirement for a minimum 915 mm (36 in.) clear width, measured between projections at or below handrail height, and a greater minimum clear width above, is consistent with the 915 mm (36 in.) width required by ADAAG (Americans with Disabilities Act Accessibility Guidelines). Note that if the handrail diameter exceeds 44 mm (1¾ in.), the ramp width will need to exceed 1120 mm (44 in.) in order to provide both the minimum 915 mm (36 in.) clear width and the minimum 57 mm (2¼ in.) clearance between the handrail and the adjacent wall.

A.5.2.5.6.1 Providing a pitch of 10 mm to 20 mm per meter (⅛ in. to ¼ in. per foot) aids the shedding of water from a nominally horizontal surface.

A.5.2.6 An exit passageway serves as a horizontal means of exit travel that is protected from fire in a manner similar to an enclosed interior exit stair. Where it is desired to offset exit stairs in a multistory building, an exit passageway can be used to preserve the continuity of the protected exit by connecting the bottom of one stair to the top of the other stair that continues to the street floor. Probably the most important use of an exit passageway is to satisfy the requirement that at least 50 percent of the exit stairs discharge directly outside from multistory buildings. *(See 5.7.2.)* Thus, if it is impractical to locate the stair on an exterior wall, an exit passageway can be connected to the bottom of the stair to convey the occupants safely to an outside exit door. In buildings of extremely large area, such as shopping malls and some factories, the exit passageway can be used to advantage where the distance of travel to reach an exit would otherwise be excessive.

A.5.2.6.1 Examples of building elements that might be arranged as exit passageways include hallways, corridors, passages, tunnels, underfloor passageways, or overhead passageways.

A.5.2.6.4 The reasoning behind Exception No. 1 is that, where an exit passageway serves occupants on the level of exit discharge as well as other floors, there should be no need to add the occupant loads and thus increase the width of the exit passageway. The situation is the same as having occupants from the level of exit discharge join occupants from upper floors for a few feet of horizontal travel through a stair enclosure.

A.5.2.11 Special consideration should be given prior to the application of alternating tread devices where children, the elderly, or physically disabled persons might have to utilize such devices. These devices present obstacles in ascent and descent that differ from stairs and ladders.

A.5.2.12.2.3 The minimum 1220 mm (48 in.) clear width is needed for a three-person carry of an occupied wheelchair up or down a stair. This procedure, as well as the more difficult two-person wheelchair carry or roll, requires training and experience. Safer, alternative stair descent measures for transporting a person who normally requires a wheelchair include evacuation chairs and self-braking stair descent devices. In addition to having such devices available where needed, and persons trained and experienced in their use, it is important to have people trained and experienced in wheelchair transfer techniques.

In view of the logistical difficulties as well as the dangers inherent in carrying occupied wheelchairs or otherwise transporting their occupants on stairs, the preferred means of egress from an area of refuge consists of facilities normally employed for ingress and egress by people using wheelchairs. Foremost among these options are elevators that meet the fire fighter service requirements of ASME/ANSI A17.1, *Safety Code for Elevators and Escalators*.

A.5.2.12.2.4 The use of elevators for egress, especially during an emergency such as a fire, is not an approach to be taken without considerable planning, ongoing effort, and a high degree of understanding by everyone involved with the evacuation of persons with mobility impairments. Due in part to the limited capacity of elevators, as well as the conflicting demands for elevator use for fire-fighting activities, even these special elevators cannot be considered as satisfying any of the *Code*'s requirements for egress capacity, number of means of egress, or travel distance to an exit.

A.5.2.12.2.6 Instructions for summoning assistance should include the following:

(1) Directions to find other means of egress
(2) Advice that persons able to use exit stairs do so as soon as possible unless they are assisting others
(3) Information on planned availability of assistance in the use of stairs or supervised operation of elevators and how to summon such assistance
(4) Directions for use of the emergency communication system

To facilitate an adequate degree of understanding of the use of areas of refuge and of the associated assisted egress procedures, information should be provided to those using the facilities. The exact content of the information, its organization (for example, as a set of instructions), and its format (for example, either posted instructions in the area of refuge or information otherwise transmitted to facility users) should be determined on a case-by-case basis. The information should be tailored to the specific facility, its emergency plan, the intended audience, and the intended presentation format. The following provides suggested information content addressing two situations: an area of refuge that uses an elevator for assisted egress and an area of refuge that uses a stair for assisted egress.

Refuge with Elevator Use. The area of refuge, provided in the elevator lobby, serves as a staging area for persons unable to use stairs and in need of assistance for their evacuation during an emergency. The elevator(s) will be taken out of automatic service and operated by emergency service personnel. Persons unable to evacuate down the exit stairs without assistance and who are in need of transportation by elevator should make sure the elevator lobby doors are closed while they wait in the elevator lobby for assistance. The two-way communication system should be used if there is more than several minutes delay in the arrival of an elevator to provide transportation to the ground floor. Alternatively, the designated exit stair provides another area of refuge where an occupant can receive evacuation assistance.

Refuge with Stair Use. The area of refuge within the designated exit stair serves as a staging area for persons in need of assistance for their evacuation during an emergency. Persons unable to use the stair unassisted, or who wish to move down the stairs at a slower pace, should wait on the stair landing. The two-way communication system should be used if assistance is needed.

A.5.2.12.3.1 Figure A.5.2.12.3.1 illustrates the application of the minimum space requirement to an area of refuge located

Copyright National Fire Protection Association
Provided by IHS under license with NFPA
No reproduction or networking permitted without license from IHS
Not for Resale

within an exit stair enclosure. Note that each of the two required spaces is sufficient to permit the parking of a standard wheelchair. Preferably, such spaces should be adjacent to each other in a location where the presence of people taking temporary shelter in an area of refuge will be immediately apparent to rescue personnel and other evacuees.

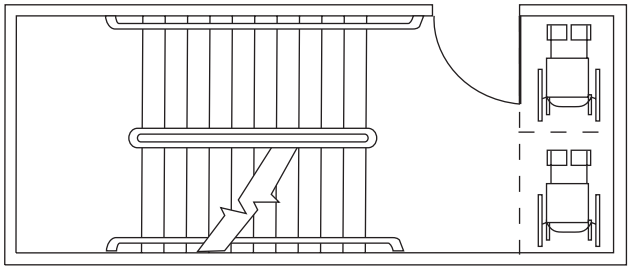

FIGURE A.5.2.12.3.1 Exit Stair Used as an Area of Refuge.

A.5.2.12.3.2 The method of meeting the tenability performance criteria required of an area of refuge less than 93 m^2 (1000 ft^2) in area might involve controlling the exposing fire (for example, via automatic sprinkler protection), installing smoke-resisting doors in the smoke-resisting barriers *(see NFPA 105, Recommended Practice for the Installation of Smoke Control Door Assemblies),* providing smoke control to prevent or limit smoke migration through cracks or other leakage paths *(see NFPA 92A, Recommended Practice for Smoke-Control Systems),* or providing other means or a combination of these means.

Calculations, if used, need to be based on established engineering relationships and equations. Such calculational procedures are described in NFPA 92A, ASHRAE/SFPE's *Design of Smoke Management Systems,* and the *SFPE Handbook of Fire Protection Engineering*.

Tenable conditions are those that maintain the temperature of any smoke in the area of refuge at less than 93°C (200°F) if the smoke is more than 1525 mm (60 in.) above the floor, and 49°C (120°F) if the smoke descends below the 1525-mm (60-in.) level in the area of refuge. If the smoke descends below the 1525-mm (60-in.) level, tenable conditions require at least 16 percent oxygen and no more than 30,000 ppm/min exposure to carbon monoxide. The exposing conditions used in the calculations should be in accordance with the following:

(1) Exposing space is sprinkler protected. The temperature of the exposing smoke is 93°C (200°F), the smoke layer extends to the floor, the oxygen content is 16 percent, and the carbon monoxide concentration is 2000 ppm (0.2 percent).
(2) Exposing space is a nonsprinklered corridor finished with Class A interior wall and ceiling finish. The temperature of the exposing smoke is 315°C (600°F), the smoke layer extends to a level 610 mm (24 in.) above the floor, the oxygen content is 3 percent, and the carbon monoxide concentration is 50,000 ppm (5 percent).
(3) Exposing space either is not a corridor or is a corridor that is not finished with a Class A interior wall and ceiling finish. The temperature of the exposing smoke is 815°C (1500°F), the smoke layer extends to a level 610 mm (24 in.) above the floor, the oxygen content is 3 percent, and the carbon monoxide concentration is 50,000 ppm (5 percent).

A.5.2.12.3.4 Requirements for fire resistance ratings in excess of 1 hour and fire protection ratings in excess of 20 minutes and prohibitions on duct penetrations might appear in other sections of this *Code*. For example, if the barrier creating the area of refuge is also part of an exit stair enclosure that connects more than three stories or is a horizontal exit, a minimum 2-hour fire resistance rating of the barrier and a minimum 1½-hour fire protection rating for opening protectives such as doors would be required for most occupancies. For further information on door openings in smoke-resisting barriers, see NFPA 105, *Recommended Practice for the Installation of Smoke Control Door Assemblies*.

Generally, by providing one barrier that subdivides a floor area, two areas of refuge can be created. This geometric fact and the possibility of creating areas of refuge within compartmented elevator lobbies or on enlarged stair landings of exit stair enclosures make less onerous any requirement that a story have more than one accessible means of egress.

A.5.2.13.1 It is the intent of this section that elevators serving as a means of egress serve only independent towers or the tower portion of any integral structure. For elevators that are used as a component in the means of egress, the elevator lobbies, elevator shaft, and machine room need to be protected from the effects of fire.

A.5.2.13.6 One or more of the following approaches can be used to restrict exposure of elevator equipment to water:

(1) A combination of sealed elevator lobby doors, sloped floors, floor drains, and sealing of elevator shaft walls is used.
(2) The elevator is mounted on the building exterior that normally operates in the elements, plus seals are installed on the elevator lobby doors.
(3) The elevator shaft is separated from the building at each floor by an exterior elevator lobby designed to prevent water entry into the elevator shaft.

Information gained from ongoing research concerning waterflow and elevators could lead to the development of water-resistive or water-protected elevator equipment specifically for fire applications. Such equipment should be used only with the building elements (sealed elevator lobby doors, sloped floors, floor drains, etc.) for which it is developed. Further information is available from the NIST publication, *Feasibility of Fire Evacuation by Elevators at FAA Control Towers*.

A.5.2.13.7 Cooling equipment dedicated to the elevator machine room can be used to minimize requirements for standby power.

A.5.2.13.8 Communication between elevator lobbies and a central control point can be by telephone or intercom. Auditory alarms should be designed so that they do not interfere with people talking on communication systems.

A.5.2.13.9 Smoke detection in the elevator lobby will result in a Phase I recall of the elevators. The elevators will then be automatically taken out of normal service and will be available to be operated by emergency service personnel.

A.5.3.1.2 The normal occupant load is not necessarily a suitable criterion, because the greatest hazard might occur when an unusually large crowd is present, a condition often difficult for authorities having jurisdiction to control by regulatory measures. The principle of this *Code* is to provide means of egress for the maximum probable number of occupants rather than to attempt to limit occupants to a num-

Copyright National Fire Protection Association
Provided by IHS under license with NFPA
No reproduction or networking permitted without license from IHS
Not for Resale

ber commensurate with available means of egress. There are, however, limits of occupancy specified in certain special cases for other reasons.

The occupant load figures of Table 5.3.1.2, based on counts of typical buildings, represent the average maximum density of occupancy.

A.5.3.2 For further information on stair capacity, see Chapter 2 of NFPA 101A, *Guide on Alternative Approaches to Life Safety*.

A.5.3.4.1 Exception No. 1 provides for minimum widths for small spaces such as individual offices. The intent is that such areas are for spaces formed by furniture and movable walls so that accommodations can easily be made for mobility impaired individuals. One side of a path could be a fixed wall, provided the other side was movable. This does not exempt the door widths or widths of fixed-wall corridors regardless of the number of people or length.

Figure A.5.3.4.1 presents selected anthropometric data for adults. The male and female figures depicted here are average, 50th percentile, in size. Some dimensions apply to very large, 97.5 percentile, adults (noted as 97.5 P).

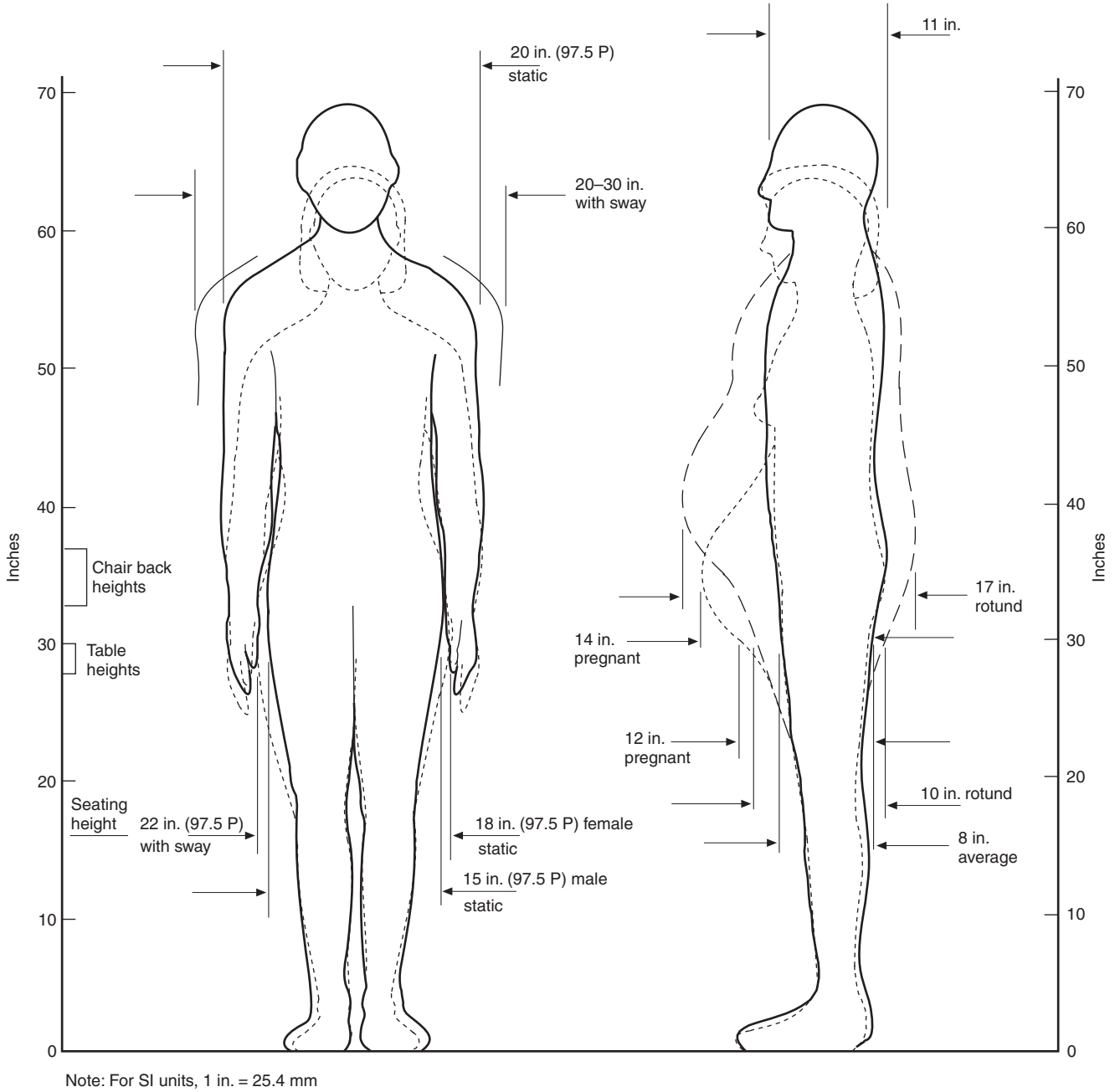

FIGURE A.5.3.4.1 Anthropometric Data for Adults.

Copyright National Fire Protection Association
Provided by IHS under license with NFPA
No reproduction or networking permitted without license from IHS
Not for Resale

A.5.3.4.2 It is not the intent of this provision to apply to noncorridor or nonpassageway areas of exit access such as the spaces between rows of desks created by office layout or low-height partitions. It is the intent of this provision to require that all corridors and passageways be at least 1120 mm (44 in.) in width (wider if serving an occupant load of more than 220 persons) regardless of occupant load served (that is, small number of persons).

A.5.3.4.9.1 Occupant characteristics are an important factor to be evaluated in determining egress criteria. Egress components in nonpatient use areas, such as administrative office spaces, should be evaluated based on actual use. A minimum "clear" corridor width of 1120 mm (44 in.) for such areas is specified by Exception No. 1, assuming occupants in nonpatient areas will be mobile and capable of evacuation without assistance.

Exception No. 2 exempts areas from 5.3.4.9.1 if exit access is arranged so as to avoid any obstructions to the convenient removal of nonambulatory persons carried on stretchers or on mattresses serving as stretchers.

A.5.3.4.9.2 See A.5.3.4.9.1 Exception No. 1 and A.5.3.4.9.1 Exception No. 2.

A.5.4.6 In detention and correctional occupancies, an exit is not necessary from each individual fire compartment or smoke compartment if there is access to an exit through other fire compartments or smoke compartments without passing through the fire compartment or smoke compartment of fire origin.

A.5.4.11.1 The original *Code* wording permitted certain exceptions such as sports arenas and railway stations. If an assembly occupancy is not similar to one of these uses, it is frequently rejected. A listing of exceptions also raises the question as to why other occupancies are not included and necessitates more additions to the list. For example, an exhibit hall of very large size can have several main entrances/exits. A theater extending the width of a block cannot really have a main entrance/exit in one confined location. A restaurant might have a main entrance serving the parking lot and another main entrance for those entering from the street. The authority having jurisdiction needs to determine where this is acceptable.

A.5.4.14 An exit is not necessary for each individual smoke compartment if there is access to an exit through other smoke compartments without passing through the smoke compartment of fire origin.

A.5.5.1.2 See A.5.5.1.6.

A.5.5.1.4 Figure A.5.5.1.4(a) through Figure A.5.5.1.4(e) illustrate the method of measurement intended by 5.5.1.4.

A.5.5.1.5 It is difficult in actual practice to construct scissor stairs so that products of combustion that have entered one stairway do not penetrate into the other. Use as separate required exits is discouraged. The term *limited-combustible* is intentionally not included in this paragraph.

A.5.5.1.6 The terms *dead end* and *common path of travel* are commonly used interchangeably. Although the concepts of each are similar in practice, they are two different concepts.

A common path of travel exists where a space is arranged so that occupants within that space are able to travel in only one direction to reach any of the exits or to reach the point at which the occupants have the choice of two paths of travel to remote exits. Part (a) of Figure A.5.5.1.6 is an example of a common path of travel.

While a dead end is similar to a common path of travel, a dead end can occur where there is no path of travel from an occupied space, but where an occupant can enter a corridor or space thinking there is an exit at the end and, finding none, must retrace his or her path to again reach a choice of exits. Part (b) of Figure A.5.5.1.6 is an example of such a dead-end arrangement.

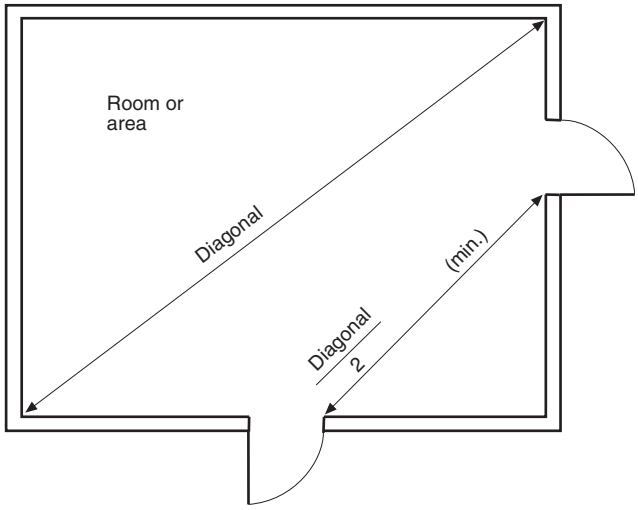

FIGURE A.5.5.1.4(a) Measurement of Diagonal and Exit Separation Distances.

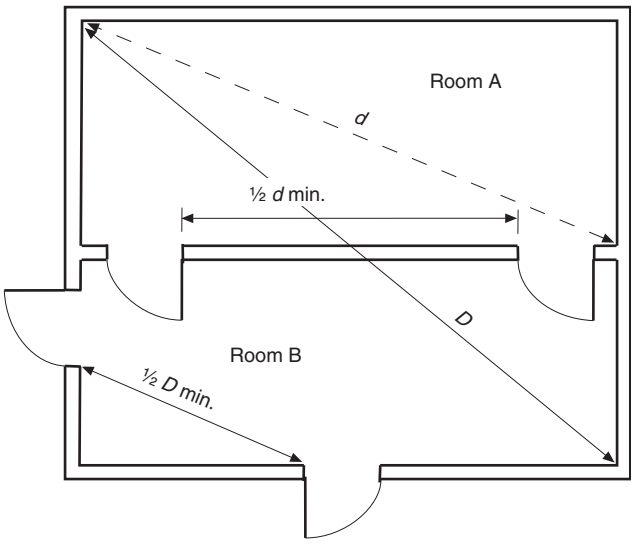

FIGURE A.5.5.1.4(b) Measurement of Diagonal and Separation Distances for Exit Access Doors and Exits.

--`,,,`-`-`,,`,,`,`,,`---
Copyright National Fire Protection Association
Provided by IHS under license with NFPA
No reproduction or networking permitted without license from IHS
Not for Resale

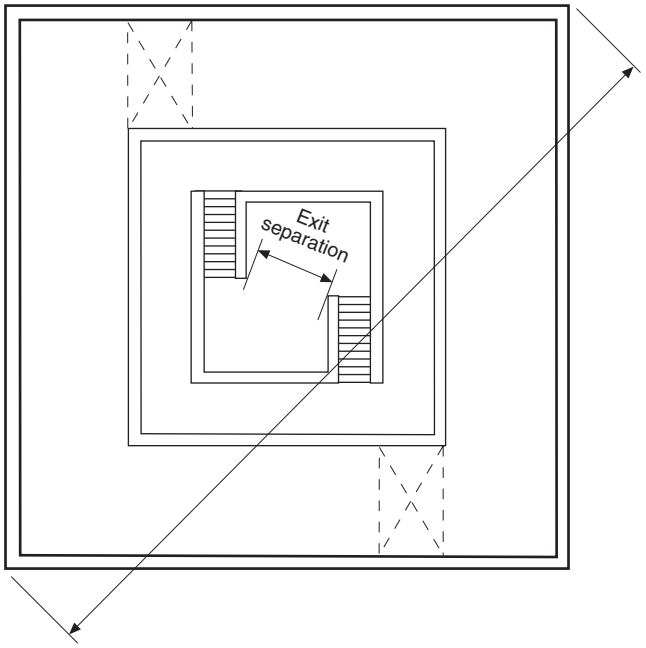

FIGURE A.5.5.1.4(c) Measurement of Exit Separation Distance Where Corridor Does Not Provide a Minimum 1-hour Fire Resistance Rating.

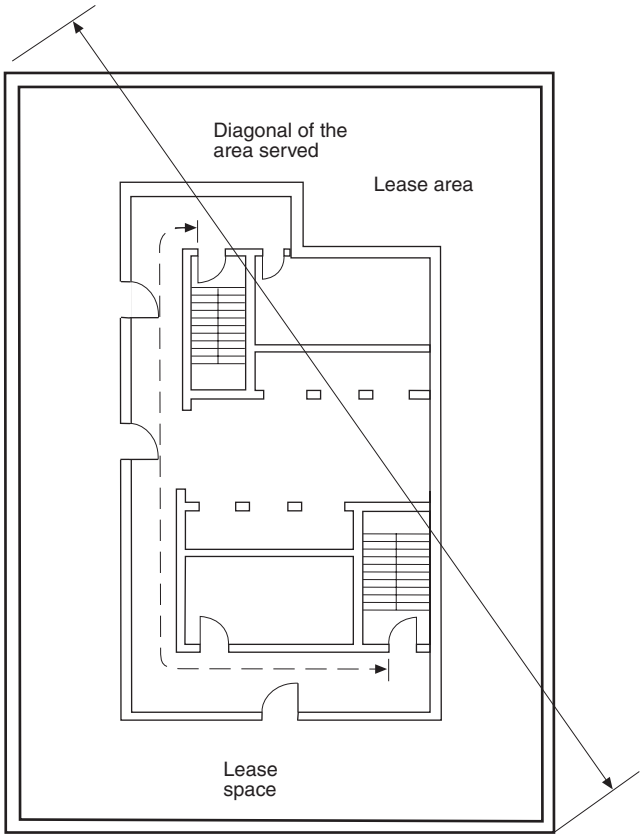

Note: Exit separation is permitted to be based on travel distance in 1-hour fire resistance–rated corridor.

FIGURE A.5.5.1.4(d) Measurement of Exit Separation Distance Along a Minimum 1-hour Fire Resistance–Rated Corridor.

Combining the two concepts, Part (c) of Figure A.5.5.1.6 is an example of a combined dead-end/common path of travel problem.

Common paths of travel and dead-end travel are measured using the same principles used to measure travel distance as described in Section 5.6 of this *Code*. Starting in the room in Part (d) of Figure A.5.5.1.6, measurement is made from the most remote point in the room along the natural path of travel, and through the doorway along the centerline of the corridor to Point C, located at the centerline of the corridor, which then provides the choice of two different paths to remote exits; this is common path of travel. The space between Point B and Point C is a dead end. See 3.3.17 for a definition of common path of travel.

A.5.5.1.10.1 Ancillary facilities located within industrial occupancies might include administrative office, laboratory, control, and employee service facilities that are incidental to the predominant industrial function and are of such size that separate occupancy classification is not warranted.

A.5.5.1.10.2 Occupants of ancillary facilities that are located within special-purpose industrial occupancies might be required by administrative controls to remain in the facility when a fire occurs in the predominant industrial area so they can perform an orderly shutdown of process equipment in order to control the spread of the fire and minimize damage to important equipment.

A.5.5.1.12 The purpose of this requirement is to prevent arrangements whereby a child can be trapped in a closet. It is intended that this provision be broadly interpreted by the authority having jurisdiction to include equipment such as refrigerators and freezers.

A.5.5.1.29.8 The intent of this requirement is to provide adequate area for transit and parking of wheeled carts or buggies used by customers to eliminate the obstruction to the means of egress of the interior exit access and the exterior exit discharge. This includes corral areas, adjacent to exits, that are constructed to restrict the movement of wheeled carts or buggies therefrom.

A.5.5.1.30.1 The minimum requirement, in Exception (2), for terminating mall exit access in not less than 1675 mm (66 in.) of egress width relates to the minimum requirement for at least one aisle in Class A mercantile occupancies [2800 m^2 (30,000 ft^2) or greater sales area] to be 1525 mm (60 in.) in width.

Exception (5) is based on fire experience in covered mall shopping centers indicating that the most likely place of fire origin is in the tenant space where the combustible fire loading is far greater than in the covered mall proper.

Furthermore, any fires resulting from the comparatively low fire loading in the covered mall proper are far more likely to be detected and extinguished in their incipient stages because of the nature of the covered mall proper as a high-traffic pedestrian way, thus producing far less smoke development in a far greater volume of space than in the much more confined adjacent tenant space.

Copyright National Fire Protection Association
Provided by IHS under license with NFPA
No reproduction or networking permitted without license from IHS
Not for Resale

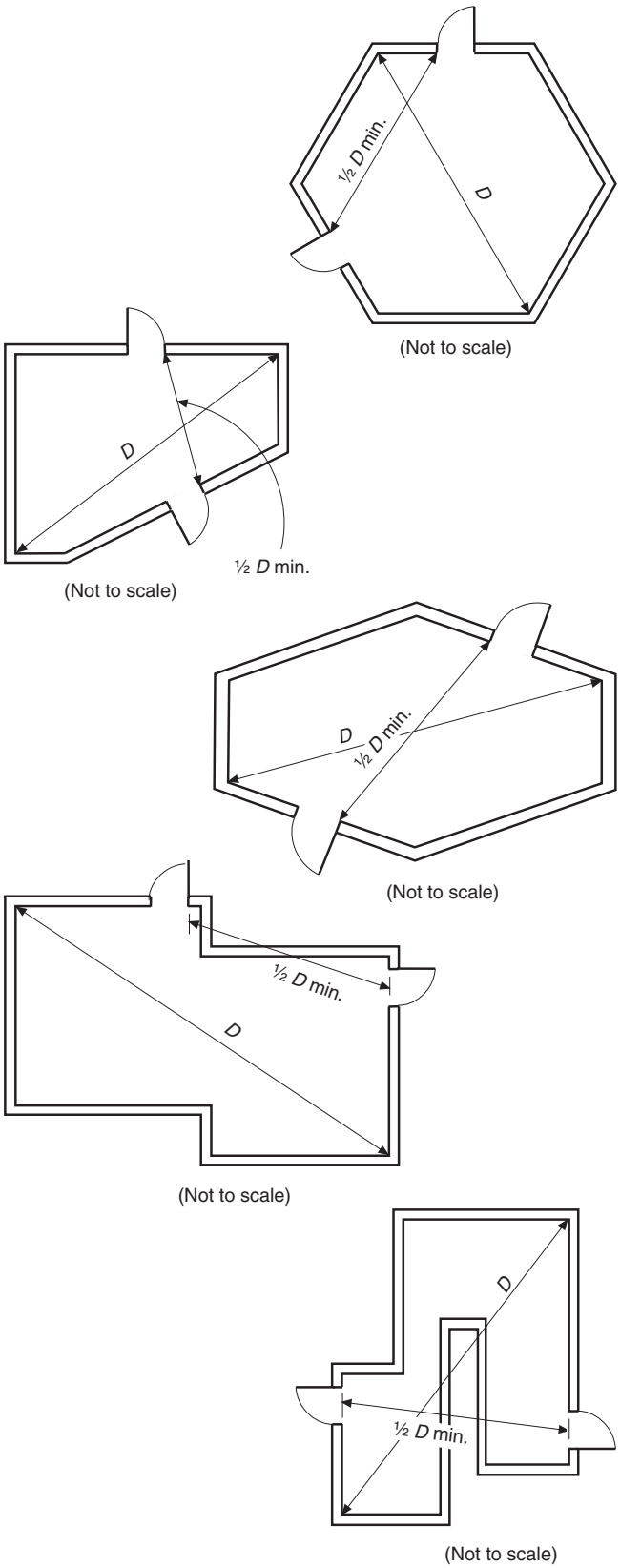

FIGURE A.5.5.1.4(e) Measurement of Diagonal and Exit Separation Distances for Irregularly Shaped Buildings.

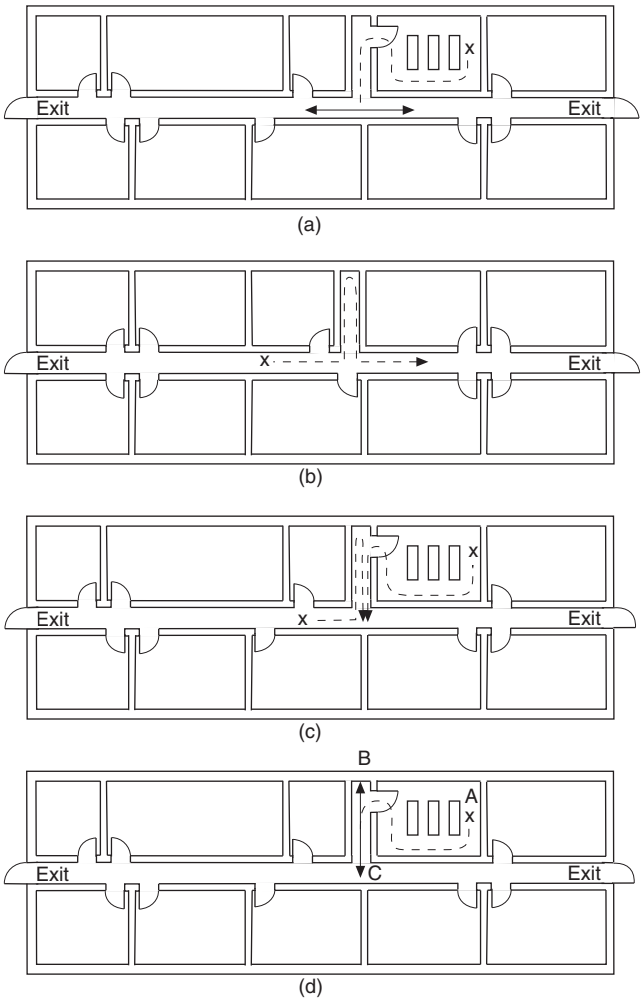

FIGURE A.5.5.1.6 Common Paths of Travel and Dead-End Corridors.

Smoke control systems that address the foregoing are necessary for the following reasons:

(1) To ensure the integrity of the covered mall as a pedestrian way by maintaining it reasonably free of the products of combustion for at least the duration required to evacuate the building
(2) To confine the products of combustion to the area of origin
(3) To remove the products of combustion with a minimum of migration of such products of combustion from one tenant to another

Systems or combinations of systems that can be engineered to accomplish this include the following:

(1) Separate mechanical exhaust or control systems
(2) Mechanical exhaust or control systems in conjunction with heating, ventilating, and air-conditioning systems
(3) Automatically or manually released gravity roof vent devices, such as skylights, relief dampers, or smoke vents
(4) Combinations of (1), (2), and (3) or any other engineered system designed to accomplish the purpose of this section

Copyright National Fire Protection Association
Provided by IHS under license with NFPA
No reproduction or networking permitted without license from IHS
Not for Resale

A.5.5.1.30.2.3 It is not the intent of this paragraph to require that large stores be considered anchor stores. A store not considered in determining the occupant load of the mall needs to be arranged so that all of its means of egress will be independent of the covered mall.

A.5.5.2.2 Doors that lead through wall paneling and that harmonize in appearance with the rest of the wall to avoid detracting from some desired aesthetic or decorative effect are not acceptable, because casual occupants might not be aware of such means of egress even though actually visible.

A.5.5.4.1 In permitting a reduction in the number of accessible means of egress, the authority having jurisdiction should consider an analysis based on the fire protection system, the physical arrangement of the space, the facility operation, and determination that such means provide the most direct route from the accessible area.

A.5.6.1 A dead end occurs where an occupant might enter a corridor, thinking there is an exit at the end and, finding none, must retrace the path traveled to again reach a choice of egress travel paths. Although relatively short dead ends are permitted by this *Code*, it is better practice to eliminate them wherever possible because they increase the danger of persons being trapped in case of fire. Compliance with the dead-end limits does not necessarily mean that the requirements for remoteness of exits have been met. This is particularly true in small buildings or buildings with short public hallways. Adequate remoteness can be obtained in such cases by further reducing the length of dead ends. *(See also A.5.5.1.6.)*

A.5.6.2 The natural exit access (path of travel) is influenced by the contents and occupancy of the building. Furniture, fixtures, machinery, or storage can serve to increase the length of travel. It is good practice in building design to recognize this by spacing exits for a completely open floor area at closer intervals than would be needed, thus reducing the hazard of excessive travel distances due to introduction of furniture, fixtures, machinery, or storage, and minimizing the possibility of violating the travel distance requirements of this *Code*.

A.5.6.3 Examples of locations where open stairways might occur include between mezzanines or balconies and the floor below.

A.5.7.1 An exit from the upper stories, in which the direction of egress travel is generally downward, should not be arranged so that it is necessary to change over to travel in an upward direction at any point before discharging to the outside. A similar prohibition of reversal of the vertical component of travel should be applied to exits from stories below the floor of exit discharge. However, an exception is permissible in the case of stairs used in connection with overhead or underfloor exit passageways that serve the street floor only.

It is important that ample roadways be available from buildings in which there are large numbers of occupants so that exits will not be blocked by persons already outside. Two or more avenues of departure should be available for all but very small places. Location of a larger theater — for example, on a narrow dead-end street — might properly be prohibited by the authority having jurisdiction under this rule unless some alternate path of travel to another street is available.

Exterior walking surfaces within the exit discharge are not required to be paved and often are provided by grass or similar surfaces. Where discharging exits into yards, across lawns, or on similar surfaces, in addition to providing the required width to allow all occupants safe access to a public way, such access also needs to meet the requirements of the following:

(1) Paragraph 5.1.4 with respect to changes in elevation
(2) Paragraph 5.2.2 for stairs, as applicable
(3) Paragraph 5.2.5 for ramps, as applicable

A.5.7.10 The basis for the exemption to the general rule on complete enclosure of exits up to their point of discharge to the outside of the building is that, with the specified safeguards, reasonable safety is maintained.

A stairway is not considered to discharge through the street floor area if it leads to the street through a fire resistance–rated enclosure (exit passageway) separating it from the main area, even though there are doors between the first floor stairway landing and the main area.

A.5.8.1.1 The extent to which illumination needs to be provided outside the building should be either to a public way or to a distance away from the building that is considered safe, whichever is closest to the building being evacuated.

A.5.8.1.3 A desirable form of means of egress lighting is by lights recessed in walls about 30 cm (1 foot) above the floor. Such lights are not likely to be obscured by smoke.

Some processes, such as manufacturing or handling of photosensitive materials, cannot be performed in areas provided with the minimum specified lighting levels. The use of spaces with lighting levels below 10 lux (1 ft-candle), as allowed by Exception No. 2, might necessitate additional safety measures, such as written emergency plans, training of new employees in emergency evacuation procedures, and periodic fire drills.

A.5.8.1.4 An example of the failure of any single lighting unit is the burning out of an electric bulb.

A.5.8.2.1 An example of a power source with reasonably ensured reliability is a public utility electric service.

A.5.9.1.1 The extent to which emergency lighting needs to be provided outside the building should be either to a public way or to a distance away from the building that is considered safe, whichever is closest to the building being evacuated.

A.5.9.2.1 The illumination uniformity ratio is determined by the following formula:

$$\frac{\text{Maximum illumination at any point}}{\text{Minimum illumination at any point}}$$

A.5.9.2.2 Where approved by the authority having jurisdiction, this requirement can be met by means such as the following:

(1) Two separate electric lighting systems with independent wiring, each adequate alone to provide the specified lighting, one supplied from an outside source such as a public utility service and the other from an electric generator on the premises driven by an independent source of power. Both sources of illumination would be in regular simultaneous operation whenever the building is occupied during periods of darkness.
(2) An electric circuit or circuits used only for means of egress illumination, with two independent electric sources arranged so that, on the failure of one, the other will automatically and immediately operate. One such source would be via connection from a public utility or similar outside power source and the other by an approved stor-

--`,,,-`-`,,`,,`,`,,`---

Copyright National Fire Protection Association
Provided by IHS under license with NFPA
No reproduction or networking permitted without license from IHS
Not for Resale

age battery with suitable provision to keep it automatically charged. Such battery would be provided with automatic controls that, following battery operation due to failure of the primary power source or to turning off the primary electric source for the lights, will shut off battery power after its specified period of operation and will automatically recharge and ready for further service when the primary current source is turned on again.

(3) Electric battery-operated emergency lighting systems, where permitted, that comply with the provisions of 5.9.2.2, and operating on a separate circuit and at a voltage different from that of the primary light. Refer to NFPA 70, *National Electrical Code*.

These requirements are not intended to prohibit the connection of a feeder serving exit lighting and similar emergency functions ahead of the service disconnecting means, but such provision does not constitute an acceptable alternate source of power. It furnishes only supplementary protection for emergency electrical functions, particularly where intended to permit the fire department to open the main disconnect without hampering exit activities. Provision should be made to alert the fire department that certain power and lighting is fed by an emergency generator and will continue operation after the service disconnect is opened.

Where emergency lighting is provided by automatic transfer between normal power service and an emergency generator, it is the intent to prohibit installation, for any reason, of a single switch that can interrupt both energy sources.

A.5.9.2.4 Automobile-type lead storage batteries are not suitable by reason of their relatively short life when not subject to frequent discharge and recharge as occurs in automobile operation.

For proper selection and maintenance of appropriate batteries, refer to NFPA 70, *National Electrical Code*.

A.5.10.1.2 A main entrance that also serves as an exit will usually be sufficiently obvious to occupants so that no exit sign is needed.

The character of the occupancy has a practical effect on the need for signs. In any assembly occupancy, hotel, department store, or other building subject to transient occupancy, the need for signs is greater than in a building subject to permanent or semipermanent occupancy by the same people, such as in an apartment house where the residents are presumed to be familiar with exit facilities by reason of regular use thereof. Even in a permanent residence-type building, however, there is need for signs to identify exit facilities such as outside stairs that are not subject to regular use during the normal occupancy of the building.

In many types of situations, the actual need for signs is debatable. In cases of doubt, however, it is desirable to be on the safe side by providing signs, particularly because posting signs does not ordinarily involve any material expense or inconvenience.

The requirement for the locations of exit signs visible from any direction of exit access is illustrated in Figure A.5.10.1.2.

A.5.10.1.4 For externally illuminated signs in accordance with 5.10.6 and internally illuminated signs listed without a viewing distance, the rated viewing distance should be considered to be 60 m (100 ft). However, placing signs to meet the 60 m (100 ft) viewing distance in other than exit access corridors might create operating difficulties or encourage placement of a sign above the line of sight. To resolve the viewing distance versus placement issue, consideration should be given to increasing the level of illumination and the size of the exit legend to the viewing distance proportionally if signs are placed at greater distances.

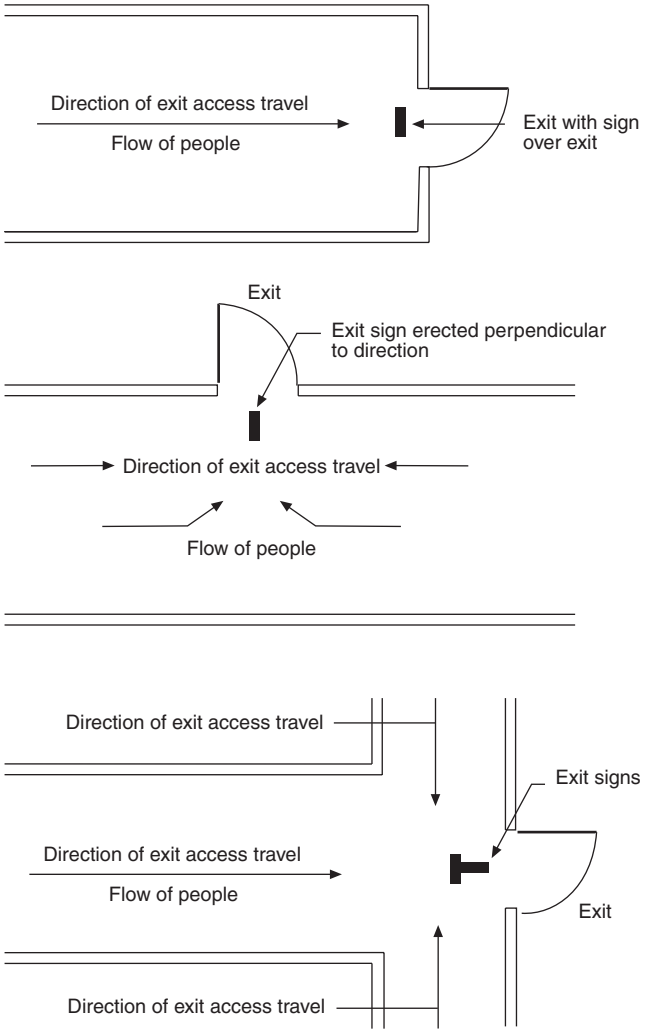

FIGURE A.5.10.1.2 Location of Exit Signs.

A.5.10.1.5 See A.5.10.3.

A.5.10.1.6 See 3.3.62.2 for definition of *internally illuminated*.

A.5.10.1.7 In stores, for example, an otherwise adequate exit sign could be rendered inconspicuous by a high-intensity illuminated advertising sign located in the immediate vicinity.

Red is the traditional color for exit signs and is required by law in many places. However, at an early stage in the development of the *Code*, a provision made green the color for exit signs, following the concept of traffic lights in which green indicates safety and red is the signal to stop. During the period when green signs were specified by the *Code*, many such signs were installed, but the traditional red signs also remained. In 1949, the Fire Marshals Association of North America voted to request that red be restored as the required exit sign color because it was found that the provision for green involved difficulties in law enactment that were out of proportion to the

Copyright National Fire Protection Association
Provided by IHS under license with NFPA
No reproduction or networking permitted without license from IHS
Not for Resale

importance of safety. Accordingly, the 10th edition of the *Code* specified red where not otherwise required by law. The present text avoids any specific requirement for color on the assumption that either red or green will be used in most cases and that there are some situations in which a color other than red or green could actually provide better visibility.

A.5.10.2 A sign complying with 5.10.2 indicating the direction of the nearest approved exit should be placed at the point of entrance to any escalator or moving walk. *(See A.5.10.3.)*

A.5.10.3 Pictograms may be used in lieu of, or in addition to, signs with text. Where graphics are used, the symbols provided in NFPA 170, *Standard for Fire Safety Symbols,* should be used. Such signs need to provide equal visibility and illumination and are to comply with the other requirements of Section 5.10.

A.5.10.4 It is not the intent of this paragraph to require emergency lighting but only to have the sign illuminated by emergency lighting if emergency lighting is required and provided.

It is not the intent to require that the entire stroke width and entire stroke height of all letters comprising the word EXIT be visible per the requirements of 5.10.6.3 under normal or emergency lighting operation, provided that the sign is visible and legible at a 30-m (100-ft) distance under all room illumination conditions.

A.5.10.5.2 It is the intent to prohibit a freely accessible light switch to control the illumination of either an internally or externally illuminated exit sign.

For flashing allowed by the exception to 5.10.5.2, the repetition rate should be approximately one cycle per second, and the duration of the off-time should not exceed ¼ second per cycle. During on-time, the illumination levels need to be provided in accordance with 5.10.6.3. Flashing signs, when activated with the fire alarm system, might be of assistance.

A.5.10.6.1 Experience has shown that the word EXIT or other appropriate wording is plainly legible at 30 m (100 ft) if the letters are as large as specified in 5.10.6.1.

A.5.10.6.2 Figure A.5.10.6.2 shows examples of acceptable locations of directional indicators with regard to left and right orientation. Directional indicators are permitted to be placed under the horizontal stroke of the letter T, provided that the spacing of not less than 9.5 mm (⅜ in.) is maintained from the horizontal and vertical strokes of the letter T.

EXIT›
‹EXIT
‹EXIT›

FIGURE A.5.10.6.2 Directional Indicators.

A.5.10.6.3 Colors providing a good contrast are red or green letters on matte white background. Glossy background and glossy letter colors should be avoided.

The average luminance of the letters and background is measured in footlamberts or candela per square meter. The contrast ratio is computed from these measurements by the following formula:

$$\text{Contrast} = \frac{Lg - Le}{Lg}$$

Where *Lg* is the greater luminance and *Le* is the lesser luminance, either the variable *Lg* or *Le* is permitted to represent the letters, and the remaining variable to represent the background. The average luminance of the letters and background can be computed by measuring the luminance at the positions indicated in Figure A.5.10.6.3 by numbered spots.

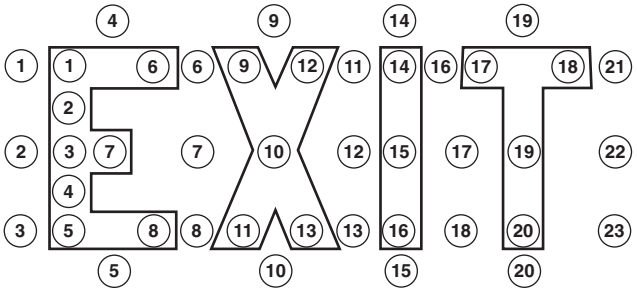

FIGURE A.5.10.6.3 Measurement of Exit Sign Luminance.

A.5.10.7.2 Photoluminescent signs need a specific minimum level of light on the face of the sign to ensure that the sign is charged for emergency operation and legibility in both the normal and emergency modes. Additionally, the type of light source (for example, incandescent, fluorescent, halogen, metal halide) is important. Each light source produces different types of visible and invisible light (for example, UV) that might affect the ability of some photoluminescent signs to charge and might also affect the amount of light output available during emergency mode. This type of sign would not be suitable where the illumination levels are permitted to decline. The charging light source should not be connected to automatic timers, because the continuous illumination of the sign is needed; otherwise, the sign illumination would not be available because it would be discharged.

A.5.10.8.1 The likelihood of occupants mistaking passageways or stairways that lead to dead-end spaces for exit doors and becoming trapped governs the need for exit signs. Thus, such areas should be marked with a sign that reads as follows:

NO EXIT

Supplementary identification indicating the character of the area, such as TO BASEMENT, STOREROOM, LINEN CLOSET, or the like, is permitted to be provided. *(See A.5.10.2.)*

A.5.10.8.2(1) These signs are to be used in place of signs that indicate that elevators are not to be used during fires. Examples of these signs include the following:

In the event of fire, this elevator will be used by
the fire department for evacuation of people.

PROTECTED ELEVATOR —
USABLE IN EMERGENCIES

A.5.10.8.2(2) The wording of these signs should reflect human behavior in fires and the control specifics of the elevator system. Subparagraph 5.10.8.2 addresses signs, but provisions for notification of the vision impaired need to be considered. For information about human behavior with respect to elevator evacuation see Groner and Levin, "Human Factors Considerations in the Potential for Using Elevators in Building Emer-

Copyright National Fire Protection Association
Provided by IHS under license with NFPA
No reproduction or networking permitted without license from IHS
Not for Resale

gency Evacuation Plans"; Levin and Groner, "Human Behavior Aspects of Staging Areas for Fire Safety in GSA Buildings"; and Levin and Groner, "Human Factors Considerations for the Potential Use of Elevators for Fire Evacuation of FAA Air Traffic Control Towers." Some examples of messages on signs that could be displayed are shown in Table A.5.10.8.2(2).

Table A.5.10.8.2(2) Elevator Status Messages

Elevator Status	Message
Normal use	Elevator in Service
Elevators recalled and waiting for fire service	Please Wait for Fire Department or Use Stairs
Elevator out of service	Elevator Out of Service

A.5.11.1 A distance of 23 m (75 ft) can be traversed in approximately 10 to 15 seconds, even when allowing for a momentary delay for making a decision as to which way to go, during which it can be assumed that a normal individual can hold his or her breath.

A.5.13.2 As allowed by the exception to 5.13.2, an architectural, exposed, suspended-grid acoustical tile ceiling with penetrations for sprinklers, ducted HVAC supply and return air diffusers, speakers, and recessed light fixtures is capable of limiting the transfer of smoke.

A.5.13.3.4 Gasketing of doors should not be necessary, as the clearances in NFPA 80, *Standard for Fire Doors and Fire Windows,* effectively achieve resistance to the passage of smoke if the door is relatively tight-fitting.

A.5.13.4.3 An air transfer opening as defined in NFPA 90A, *Standard for the Installation of Air-Conditioning and Ventilating Systems,* is an opening designed to allow the movement of environmental air between two contiguous spaces.

A.5.14.1.3 Where dampers are required by the smoke control system design so that the system will function effectively, it is not the intent of Exception No. 2 to allow the damper to be omitted.

This exception is not intended to prevent the use of plenum returns where ducting is used to return air from a ceiling plenum through smoke barrier walls. Short stubs or jumper ducts are not acceptable. Ducting needs to connect at both sides of the opening and extend into adjacent spaces away from the wall. The intent is to prohibit open air transfers at or near the smoke barrier walls.

A.5.14.1.5 Smoke partition doors are intended to provide access to adjacent zones. The pair of cross-corridor doors must swing in opposite directions. Access to both zones needs to be provided.

A.5.14.1.6 Smoke barriers can include walls having door openings other than cross-corridor doors. There is no restriction in the *Code* regarding which doors, or how many doors, form part of a smoke barrier. For example, doors from the corridor to individual rooms can form part of a smoke barrier.

A.5.14.1.7 It is not the intent to require the frame to be a listed assembly.

A.5.14.2.5 Smoke barriers can include walls having door openings other than cross-corridor doors. There is no restriction in the *Code* regarding which doors or how many doors form part of a smoke barrier. For example, doors from the corridor to individual rooms can form part of a smoke barrier.

A.5.14.3.1 A door to the outside, by itself, does not meet the intent of Exception No. 2 if emergency operating procedures do not provide for the door to be unlocked when needed. In cases where use of the door is not ensured, a true smoke barrier per the base requirement of 5.14.3.1 would be needed.

A.5.14.3.3 *Structural fire resistance* is defined as the ability of the assembly to stay in place and maintain structural integrity without consideration of heat transmission. Twelve-gauge steel plate that is suitably framed and stiffened meets this requirement.

A.5.14.3.4 One example of the exemption allowed by Exception No. 1 is that a smoke barrier is permitted to consist of fire-rated glazing panels mounted in a security grille arrangement.

A.5.15.2.2 The catchment area served by an aisle accessway or aisle is the portion of the total space that is naturally served by the aisle accessway or aisle. Hence, the requirement for combining the required capacity where paths converge is, in effect, a restatement of the idea of a catchment area. The establishment of catchment areas should be based on a balanced use of all means of egress, with the number of persons in proportion to egress capacity.

A.5.15.3 For purposes of the means of egress requirements of this *Code*, tablet-arm chair seating is not considered seating at tables. Dinner theater–style configurations need to comply with the aisle accessway requirements that apply to seating at tables and the aisle requirements of 5.15.4 if the aisles contain steps or are ramped. Generally, if aisles contain steps or are ramped, all of this *Code*'s requirements for aisles, stairs, and ramps need to be met; attention is also drawn to 5.1.4 and A.5.1.4.2.

A.5.15.3.1 Seats that have reclining backs are assumed to be in their most upright position when unoccupied.

A.5.15.3.3 The system known as "continental seating" provides one pair of egress doors for every five rows, located close to the ends of the rows. In previous editions of NFPA *101®*, *Life Safety Code®*, such egress doors were required to provide a minimum clear width of 1675 mm (66 in.) and discharge into a foyer, lobby, or to the exterior of the building. This continental seating arrangement can result in egress flow times that are approximately one-half as long as those resulting if side aisles lead to more remote doors (that is, with nominal flow times of approximately 100 seconds rather than 200 seconds). Such superior egress flow time performance can be desirable in some situations; however, special attention should be given either to a comparably good egress capacity for other parts of the egress system or to sufficient space to accommodate queuing outside the seating space.

A.5.15.4.4 Technical information about the convenience and safety of ramps and stairs that have gradients in the region of 1 in 8 clearly suggests that the goal should be (1) ramp slopes that are less steep and (2) better combinations of stair risers and treads than, for example, 100-mm (4-in.) risers and 810-mm (32-in.) treads. This should be kept in mind by designers in establishing the gradient of seating areas to be served by aisles.

A.5.15.4.5.2 Tread depth is more important to stair safety than is riser height. Therefore, where seating area gradient is

--`,,`-`-`,,`,,`,`,,`---
Copyright National Fire Protection Association
Provided by IHS under license with NFPA
No reproduction or networking permitted without license from IHS
Not for Resale

less than 5 in 11, it is recommended that the tread dimension be increased beyond 280 mm (11 in.) rather than reducing the riser height. Where seating area gradient exceeds 8 in 11, it is recommended that the riser height be increased while maintaining a tread depth of at least 280 mm (11 in.).

A.5.15.4.7 Failure to provide a handrail within a 760-mm (30-in.) horizontal distance of all required portions of the aisle stair width will mean that the egress capacity calculation needs to be modified as required by 5.15.1(2). This might lead to an increase in the aisle width. Although this will compensate for reduced egress efficiency, it does not help individuals walking on such portions of stairs to recover from missteps (other than possibly reducing marginally the crowding that might exacerbate the problem of falls). *(See also 5.2.2.4.)*

A.5.15.4.8 Certain tread covering materials such as plush carpets, which are often used in theaters, produce an inherently well-marked tread nosing under most lighting conditions. On the other hand, concrete treads (with nosings having a sharp edge), especially under outdoor lighting conditions, are difficult to discriminate and therefore require an applied marking stripe. Slip resistance of such marking stripes should be similar to the rest of the treads, and no tripping hazard should be created; luminescent, self-luminous, and electroluminescent-type tread markings have the advantage of being apparent in reduced light or absence of light.

A.5.15.5 For purposes of the means of egress requirements of this *Code*, seating at counters or other furnishings is considered to be the same as seating at tables.

A.5.15.5.1 Effectively, the exception to 5.15.5.1 applies where the aisle accessway is bounded by movable seating, the 305-mm (12 in.) minimum width might be increased by about 380 mm to 760 mm (15 in. to 30 in.) as seating is pushed in toward tables. Moreover, it is such movement of chairs during normal and emergency egress situations that makes the zero-clearance exception workable. The exception also applies to booth seating where people sitting closest to the aisle normally move out ahead of anyone farthest from the aisle.

A.5.15.5.2 See A.5.15.6.3.

A.5.15.5.3 The minimum width requirement as a function of accessway length is as follows:

(1) 0 mm (0 in.) for the first 1830 mm (72 in.) of length toward the exit
(2) 305 mm (12 in.) for the next 1830 mm (72 in.), that is, up to 3660 mm (144 in.) of length, and
(3) 305 mm to 610 mm (12 in. to 24 in.) for lengths from 3660 mm to 10,970 mm (144 in. to 432 in.), the maximum length to the closest aisle or egress doorway permitted by 5.15.5.4

Add to these widths any additional width needed for seating as described in 5.15.6.3.

A.5.15.6.1 See 5.1.4 and A.5.1.4.2 for special circulation safety precautions applicable where small differences in elevation occur.

A.5.15.6.2 Attention is drawn to the need to make facilities accessible to people using wheelchairs, and reference is made to ICC/ANSI A117.1, *American National Standard for Accessible and Usable Buildings and Facilities,* which provides guidance on appropriate aisle widths.

A.5.15.6.3 Figure A.5.15.6.3 shows typical measurements involving seating and tables abutting an aisle. Note that for purposes of the means of egress requirements of this *Code*, seating at counters or other furnishings is considered to be the same as seating at tables.

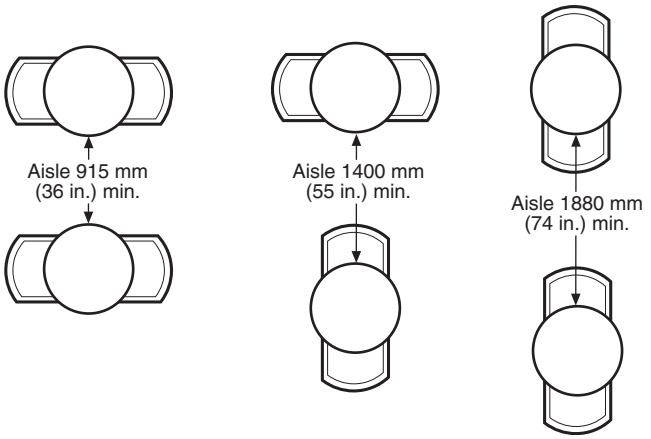

FIGURE A.5.15.6.3 Seating at Tables Abutting an Aisle.

A.5.15.8.1 Areas with sightline-constrained rail heights include the front of boxes, galleries, and balconies, and aisle accessways adjacent to vomitories and orchestra pits.

A.5.15.9.1 Life safety evaluations are examples of performance-based approaches to life safety. The general approach to performance criteria, scenarios, evaluation, safety factors, documentation, maintenance, and periodic assessment (including a warrant of fitness) applies to the broader considerations in a life safety evaluation. A life safety evaluation deals not only with fire but also with fire, storm, collapse, crowd behavior, and other related safety considerations for which a checklist is provided in A.5.15.9.3. Means of egress facilities plus facility management capabilities should be adequate to cope with scenarios where certain egress routes are blocked for some reason.

In addition to making realistic assumptions about the capabilities of persons in the facility (for example, an assembled crowd including many disabled persons or persons unfamiliar with the facility), the life safety evaluation should include a safety factor of not less than 2.0 in all calculations relating to hazard development time and required egress time (the combination of flow time and other time needed to detect and assess an emergency condition, initiate egress, and move along the egress routes). The factor of safety takes into account the possibility that half of the egress routes might not be used (or be usable) in certain situations.

Regarding crowd behavior, the potential hazards created by larger masses of people and greater crowd densities (which can be problematic during ingress, occupancy, and egress) demand that technology be used by designers, managers, and authorities responsible for buildings to compensate for the relaxed egress capacity provisions of Table 5.15.10.3. In very large buildings for assembly use, the hazard of crowd crushes can exceed that of fire or structural failure. Therefore, the building designers, managers, event planners, security personnel, police authorities, and fire authorities, as well as the building construction authorities, should understand the potential problems and solutions, including coordination of their activities. For crowd behavior, this understanding includes factors of space, energy, time, and information, as well as specific

Copyright National Fire Protection Association
Provided by IHS under license with NFPA
No reproduction or networking permitted without license from IHS
Not for Resale

crowd management techniques such as metering. Published guidance on these factors and techniques is found in the *SFPE Handbook of Fire Protection Engineering*, Section 3, Chapter 13, pp. 3-263-3-285 (Pauls, J., "Movement of People"), and the publications referenced therein.

Table 5.15.1 and Table 5.15.10.3 are based on a linear relationship between number of seats and nominal flow time, with not less than 200 seconds (3.3 minutes) for 2000 seats plus 1 second for every additional 50 seats up to 25,000. Beyond 25,000 total seats, the nominal flow time is limited to 660 seconds (11 minutes). Nominal flow time refers to the flow time for the most able group of patrons; some groups less familiar with the premises or less able groups might take longer to pass a point in the egress system. Although three or more digits are noted in the tables, the resulting calculations should be assumed to provide only two significant figures of precision.

A.5.15.9.3 Factors to be considered in a life safety evaluation include the following.

(1) Nature of the Events Being Accommodated
  (a) Ingress, intra-event movement, and egress patterns
  (b) Ticketing and seating policies/practices
  (c) Event purpose (e.g., sports contest, religious meeting)
  (d) Emotional qualities (e.g., competitiveness) of event
  (e) Time of day when event held
  (f) Time duration of single event
  (g) Time duration of attendees' occupancy of the building

(2) Occupant Characteristics and Behavior
  (a) Homogeneity
  (b) Cohesiveness
  (c) Familiarity with building
  (d) Familiarity with similar events
  (e) Capability (as influenced by factors such as age, physical abilities)
  (f) Socioeconomic factors
  (g) Small minority involved with recreational violence
  (h) Emotional involvement with the event and other occupants
  (i) Use of alcohol or drugs
  (j) Food consumption
  (k) Washroom utilization

(3) Management
  (a) Clear, contractual arrangements for facility operation/use as follows:
    i. Between facility owner and operator
    ii. Between facility operator and event promoter
    iii. Between event promoter and performer
    iv. Between event promoter and attendee
    v. With police forces
    vi. With private security services
    vii. With ushering services
  (b) Experience with the building
  (c) Experience with similar events and attendees
  (d) Thorough, up-to-date operations manual
  (e) Training of personnel
  (f) Supervision of personnel
  (g) Communications systems and utilization
  (h) Ratios of management and other personnel to attendees
  (i) Location/distribution of personnel
  (j) Central command location
  (k) Rapport between personnel and attendees
  (l) Personnel supportive of attendee goals
  (m) Attendees respect for personnel due to the following:
    i. Dress (uniform) standards
    ii. Age and perceived experience
    iii. Personnel behavior, including interaction
    iv. Distinction between crowd management and control
    v. Management's concern for facility quality (e.g., cleanliness)
    vi. Management's concern for entire event experience of attendees (i.e., not just during the occupancy of the building)

(4) Emergency Management Preparedness
  (a) Complete range of emergencies addressed in operations manual
  (b) Power loss
  (c) Fire
  (d) Severe weather
  (e) Earthquake
  (f) Crowd incident
  (g) Terrorism
  (h) Hazardous materials
  (i) Transportation accident (e.g., road, rail, air)
  (j) Communications systems available
  (k) Personnel and emergency forces ready to respond
  (l) Attendees clearly informed of situation and proper behavior

(5) Building Systems
  (a) Structural soundness
  (b) Normal static loads
  (c) Abnormal static loads (e.g., crowds, precipitation)
  (d) Dynamic loads (e.g., crowd sway, impact, explosion, wind, earthquake)
  (e) Stability of nonstructural components (e.g., lighting)
  (f) Stability of movable (e.g., telescoping) structures
  (g) Fire protection
  (h) Fire prevention (e.g., maintenance, contents, housekeeping)
  (i) Compartmentation
  (j) Automatic detection and suppression of fire
  (k) Smoke control
  (l) Alarm and communications systems
  (m) Fire department access routes and response capability
  (n) Structural integrity
  (o) Weather protection
  (p) Wind
  (q) Precipitation (attendees rush for shelter or hold up egress of others)
  (r) Lightning
  (s) Circulation systems
  (t) Flowline or network analysis
  (u) Waywinding and orientation
  (v) Merging of paths (e.g., precedence behavior)
  (w) Decision/branching points
  (x) Route redundancies
  (y) Counterflow, crossflow, and queuing situations
  (z) Control possibilities, including metering
  (aa) Flow capacity adequacy
  (ab) System balance
  (ac) Movement time performance
  (ad) Flow times
  (ae) Travel times

Copyright National Fire Protection Association
Provided by IHS under license with NFPA
No reproduction or networking permitted without license from IHS
Not for Resale

(af) Queuing times
(ag) Route quality
(ah) Walking surfaces (e.g., traction, discontinuities)
(ai) Appropriate widths and boundary conditions
(aj) Handrails, guardrails, and other rails
(ak) Ramp slopes
(al) Step geometries
(am) Perceptual aspects (e.g., orientation, signage, marking, lighting, glare, distractions)
(an) Route choices, especially for vertical travel
(ao) Resting/waiting areas
(ap) Levels of service (overall crowd movement quality)
(aq) Services
(ar) Washroom provision and distribution
(as) Concessions
(at) First aid and EMS facilities
(au) General attendee services

A scenario-based approach to performance-based fire safety is addressed in Chapter 5 of NFPA *101*, *Life Safety Code*. In addition to using such scenarios and, more generally, the attention to performance criteria, evaluation, safety factors, documentation, maintenance, and periodic assessment required when the performance-based option is used, life safety evaluations should consider scenarios based on characteristics important in assembly occupancies. These characteristics include the following:

(1) Whether there is a local or mass awareness of an incident, event, or condition that might provoke egress
(2) Whether the incident, event, or condition stays localized or spreads
(3) Whether egress is desired by facility occupants
(4) Whether there is a localized start to any egress or mass start to egress
(5) Whether exits are available or not available

Examples of scenarios and sets of characteristics that might occur in a facility include the following.

Scenario 1 — Characteristics: Mass start, egress desired (by management and attendees), exits not available, local awareness. Normal egress at the end of an event occurs just as a severe weather condition induces evacuees at the exterior doors to retard or stop their egress. The backup that occurs in the egress system is not known to most evacuees, who continue to press forward (potentially resulting in a crowd crush).

Scenario 2 — Characteristics: Mass start, egress not desired (by management), exits possibly not available, mass awareness. An earthquake occurs during an event. The attendees are relatively safe in the seating area. The means of egress outside the seating areas are relatively unsafe and vulnerable to aftershock damage. Facility management discourages mass egress until the means of egress can be checked and cleared for use.

Scenario 3 — Characteristics: Local start, incident stays local, egress desired (by attendees and management), exits available, mass awareness. A localized civil disturbance (for example, firearms violence) provokes localized egress, which is seen by attendees, generally, who then decide to leave also.

Scenario 4 — Characteristics: Mass start, egress desired, incident spreads, exits not available, mass awareness. In an open-air facility unprotected from wind, precipitation, and lightning, sudden severe weather prompts egress to shelter but not from the facility. The means of egress congest and block quickly as people in front stop once they are under shelter while people behind them continue to press forward (potentially resulting in a crowd crush).

These scenarios illustrate some of the broader factors to be taken into account when assessing the capability of both building systems and management features on which reliance is placed in a range of situations, not just fire emergencies. Some scenarios also illustrate the conflicting motivations of management and attendees based on differing perceptions of danger and differing knowledge of hazards, countermeasures, and capabilities. Mass egress might not be the most appropriate life safety strategy in some scenarios, such as Scenario 2.

Table A.5.15.9.3 summarizes the characteristics in the scenarios and provides a framework for developing other characteristics and scenarios that might be important for a particular facility, hazard, occupant type, event, or management.

A.5.15.10 Outdoor facilities are not accepted as inherently smoke protected, but they must meet the requirements of smoke-protected assembly seating in order to utilize the special requirements for means of egress.

A.5.15.10.1(A) The engineering analysis required by Exception No. 2 should be part of the life safety evaluation required by 5.15.9.

A.6.1 The phrase *means of escape* indicates a path out of a residential unit that does not conform to the strict definition of *means of egress* but does meet the intent of the definition by providing an alternative path out of a building. *(See A.5.1.)*

A.6.2.1.3 For use of emergency escape devices, refer to A.5.1.

A.6.2.1.3(3) A window with dimensions of 510 mm × 610 mm (20 in. × 24 in.) has an opening of 0.31 m^2 (3.3 ft^2), which is less than the required 0.53 m^2 (5.7 ft^2). Therefore, either the height or width needs to exceed the minimum requirement to provide the required clear area. See Figure A.6.2.1.3(3).

A.6.2.3.5 It is the intent of this requirement that security measures, where installed, should not prevent egress.

A.6.5.8 It is the intent of this requirement that security measures, where installed, should not prevent egress.

Table A.5.15.9.3 Life Safety Evaluation Scenario Characteristics Matrix

					Management		Occupants						
Scenario	Local Awareness	Mass Awareness	Incident Localized	Incident Spreads	Egress Desired	Egress Not Desired	Egress Desired	Egress Not Desired	Local Start	Mass Start	Exits Available	Exits Not Available	Other
1	X				X		X			X		X	
2		X				X				X		X	
3		X	X		X		X		X				
4		X		X			X			X		X	

Copyright National Fire Protection Association
Provided by IHS under license with NFPA
No reproduction or networking permitted without license from IHS
Not for Resale

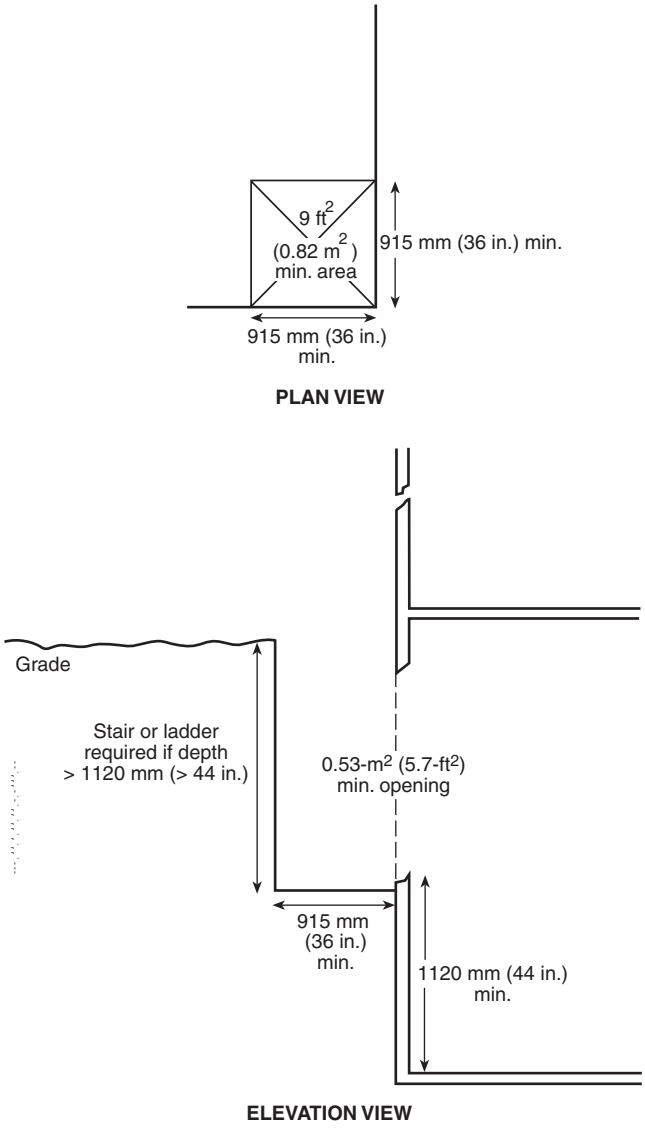

FIGURE A.6.2.1.3(3) Escape Window Utilizing a Window Well.

A.6.6.3 For example, a window with dimensions of 510 mm × 610 mm (20 in. × 24 in.) has an opening of 0.31 m^2 (3.3 ft^2), which is less than the required 0.53 m^2 (5.7 ft^2). Therefore, either the height or width needs to exceed the minimum requirement to provide the required clear area.

A.6.6.8.1 The intent of Exception No. 3 is to prohibit the use of Exception No. 3 to 6.6.8.1 if the staff member is also a board and care occupancy resident who receives personal care services.

A.7.2.8 It is the intent to permit the use of Table 7.2.8 for existing stairs in existing buildings even where there is a change of occupancy. Safety improvements that are reasonable and feasible at minimal cost should be made. Improvements include removal, repair, or replacement of stair coverings *(as described in A.5.2.2.3.5)* and addition of functional handrails and guardrails in place of or in conjunction with other rails *(as described in 5.2.2.4)*.

A.7.2.11.6 This reduction in required height applies only to the stair, not to the landings.

A.7.2.24(A) Building outside stairs might not be practical *(see 5.2.2)* due to lot lines limiting stair size or due to proximity to sidewalks, alleys, grade level roads or utilities, or historical building preservation. A replacement fire escape stair is not intended to be considered a new fire escape stair.

A.7.2.24(C) In permitting the modification of the provisions of 7.2.4(C), the authority having jurisdiction should consider the presence of automatic sprinkler protection, low-hazard occupancy, or other special conditions.

A.7.2.24(H) Although superior to fire escape ladders, swinging stairs are generally unsatisfactory, even for emergency use. Although permitted by this *Code*, they should not be used where it is reasonably possible to terminate the fire escape stair at the ground.

A.7.2.24(H)(9) A latch is desirable to hold swinging stairs down after they have swung to the ground.

A.7.2.31 The requirements in Table 7.2.31 for smoke-resistant and fire-rated separations include taking the necessary precautions to restrict the spread of smoke through the air-handling system. However, the intent is that smoke dampers are required to be provided for each opening. Smoke dampers would be one acceptable method; however, other techniques, such as allowing the fans to continue to run with 100 percent supply and 100 percent exhaust, would be acceptable.

A.7.2.35(2) The automatic smoke venting should be in accordance with NFPA 204, *Guide for Smoke and Heat Venting*, for light-hazard occupancies.

Annex B Sample Ordinance Adopting NFPA 101B

This annex is not a part of the requirements of this NFPA document but is included for informational purposes only.

B.1 The following sample ordinance is provided to assist a jurisdiction in the adoption of this Code and is not part of this Code.

ORDINANCE NO. _____

An ordinance of the *[jurisdiction]* adopting the *[year]* edition of NFPA *[document number]*, *[complete document title]* documents listed in Chapter 2 of that code; prescribing regulations governing conditions hazardous to life and property from fire or explosion; providing for the issuance of permits and collection of fees; repealing Ordinance No. _____ of the *[jurisdiction]* and all other ordinances and parts of ordinances in conflict therewith; providing a penalty; providing a severability clause; and providing for publication; and providing an effective date.

BE IT ORDAINED BY THE *[governing body]* **OF THE** *[jurisdiction]*:

SECTION 1 That the *[complete document title]* and documents adopted by Chapter 2, three (3) copies of which are on file and are open to inspection by the public in the office of the *[jurisdiction's keeper of records]* of the *[jurisdiction]*, are hereby adopted and incorporated into this ordinance as fully as if set out at length herein, and from the date on which this ordinance shall take effect, the provisions thereof shall be controlling within the limits of the *[jurisdiction]*. The same are hereby adopted as the code of the *[jurisdiction]* for the purpose of

Copyright National Fire Protection Association
Provided by IHS under license with NFPA
No reproduction or networking permitted without license from IHS
Not for Resale

prescribing regulations governing conditions hazardous to life and property from fire or explosion and providing for issuance of permits and collection of fees.

SECTION 2 Any person who shall violate any provision of this code hereby adopted or fail to comply therewith; or who shall violate or fail to comply with any order made thereunder; or who shall build in violation of any detailed statement of specifications or plans submitted and approved thereunder; or failed to operate in accordance with any certificate or permit issued thereunder; and from which no appeal has been taken; or who shall fail to comply with such an order as affirmed or modified by or by a court of competent jurisdiction, within the time fixed herein, shall severally for each and every such violation and noncompliance, respectively, be guilty of a misdemeanor, punishable by a fine of not less than $ _____ nor more than $_____ or by imprisonment for not less than _____ days nor more than _____ days or by both such fine and imprisonment. The imposition of one penalty for any violation shall not excuse the violation or permit it to continue; and all such persons shall be required to correct or remedy such violations or defects within a reasonable time; and when not otherwise specified the application of the above penalty shall not be held to prevent the enforced removal of prohibited conditions. Each day that prohibited conditions are maintained shall constitute a separate offense.

SECTION 3 Additions, insertions, and changes — that the *[year]* edition of NFPA *[document number], [complete document title]* is amended and changed in the following respects:

List Amendments

SECTION 4 That ordinance No. _____ of *[jurisdiction]* entitled *[fill in the title of the ordinance or ordinances in effect at the present time]* and all other ordinances or parts of ordinances in conflict herewith are hereby repealed.

SECTION 5 That if any section, subsection, sentence, clause, or phrase of this ordinance is, for any reason, held to be invalid or unconstitutional, such decision shall not affect the validity or constitutionality of the remaining portions of this ordinance. The *[governing body]* hereby declares that it would have passed this ordinance, and each section, subsection, clause, or phrase hereof, irrespective of the fact that any one or more sections, subsections, sentences, clauses, and phrases be declared unconstitutional.

SECTION 6 That the *[jurisdiction's keeper of records]* is hereby ordered and directed to cause this ordinance to be published. [NOTE: An additional provision may be required to direct the number of times the ordinance is to be published and to specify that it is to be in a newspaper in general circulation. Posting may also be required.]

SECTION 7 That this ordinance and the rules, regulations, provisions, requirements, orders, and matters established and adopted hereby shall take effect and be in full force and effect *[time period]* from and after the date of its final passage and adoption.

Annex C Informational References

C.1 Referenced Publications. The following documents or portions thereof are referenced within this *Code* for informational purposes only and are thus not part of the requirements of this document unless also listed in Chapter 2.

C.1.1 NFPA Publications. National Fire Protection Association, 1 Batterymarch Park, P.O. Box 9101, Quincy, MA 02269-9101.

NFPA 70, *National Electrical Code®*, 2002 edition.

NFPA 80, *Standard for Fire Doors and Fire Windows,* 1999 edition.

NFPA 90A, *Standard for the Installation of Air-Conditioning and Ventilating Systems,* 1999 edition.

NFPA 92A, *Recommended Practice for Smoke-Control Systems,* 2000 edition.

NFPA *101®*, *Life Safety Code®*, 2000 edition.

NFPA 101A, *Guide on Alternative Approaches to Life Safety*, 2001 edition.

NFPA 105, *Recommended Practice for the Installation of Smoke Control Door Assemblies,* 1999 edition.

NFPA 170, *Standard for Fire Safety Symbols,* 1999 edition.

NFPA 204, *Guide for Smoke and Heat Venting,* 2002 edition.

SFPE Handbook of Fire Protection Engineering, third edition, 2002.

C.1.2 Other Publications.

C.1.2.1 ANSI Publications. American National Standards Institute, Inc., 11 West 42nd Street, 13th floor, New York, NY 10036.

ASME/ANSI A17.1, *Safety Code for Elevators and Escalators,* 2000.

ICC/ANSI A117.1, *American National Standard for Accessible and Usable Buildings and Facilities,*1998.

C.1.2.2 ASHRAE Publication. American Society of Heating, Refrigerating and Air-Conditioning Engineers, Inc., 1791 Tullie Circle, N.E., Atlanta, GA 30329-2305.

Handbook and Product Directory — Fundamentals.

Klote, John H., and Milke, James A., *Design of Smoke Management Systems,* 1992.

C.1.2.3 ASTM Publication. American Society for Testing and Materials, 100 Barr Harbor Drive, West Conshohocken, PA 19428-2959.

ASTM F 1637, *Standard Practice for Safe Walking Surfaces,* 1995.

C.1.2.4 ICC Publication. International Code Council, 5203 Leesburg Pike, Falls Church, VA 22041.

International Building Code, 2000.

C.1.2.5 NIST Publications. National Institute of Standards and Technology, Gaithersburg, MD 20899-0001.

Groner, N. E. and Levin, B. M. *Human Factors Considerations in the Potential for Using Elevators in Building Emergency Evacuation Plans,* NIST-GCR-92-615, 1992.

Klote, J. H., Levin, B. M., and Groner, N. E. *Feasibility of Fire Evacuation by Elevators at FAA Control Towers*, NISTIR 5445, 1994.

Levin, B. M., and Groner, N. E., *Human Behavior Aspects of Staging Areas for Fire Safety in GSA Buildings*, NIST-GCR-92-606, 1992.

Levin, B. M., and Groner, N. E., *Human Factors Considerations for the Potential Use of Elevators for Fire Evacuation of FAA Air Traffic Control Towers*, NIST-GCR-94-656, 1994.

C.1.2.6 UL Publication. Underwriters Laboratories Inc., 333 Pfingsten Road, Northbrook, IL 60062.

Fire Resistance Directory.

C.1.2.7 U.S. ATBCB Publication. U.S. Architectural and Transportation Barriers Compliance Board, 1331 F Street NW, Washington, DC 20004.

Copyright National Fire Protection Association
Provided by IHS under license with NFPA
No reproduction or networking permitted without license from IHS
Not for Resale

ADAAG Americans with Disabilities Act Accessibility Guidelines, 1994.

C.1.2.8 Additional Publication.

Templer, J. A., *The Staircase: Studies of Hazards, Falls, and Safer Design,* Cambridge, MA: MIT Press, 1992.

C.2 Informational References. (Reserved)

C.3 References for Extracts. The following documents are listed here to provide reference information, including title and edition, for extracts given throughout this code as indicated by a reference in brackets [ ] following a section or paragraph. These documents are not a part of the requirements of this document unless also listed in Chapter 2 for other reasons.

NFPA 80, *Standard for Fire Doors and Fire Windows,* 1999 edition.

NFPA 850, *Recommended Practice for Fire Protection for Electric Generating Plants and High Voltage Direct Current Converter Stations,* 2000 edition.

Copyright National Fire Protection Association
Provided by IHS under license with NFPA
No reproduction or networking permitted without license from IHS
Not for Resale

Index

© 2002 National Fire Protection Association. All Rights Reserved.

The copyright in this index is separate and distinct from the copyright in the document that it indexes. The licensing provisions set forth for the document are not applicable to this index. This index may not be reproduced in whole or in part by any means without the express written permission of NFPA.

-A-

Access-controlled doors 5.2.1.6.2
Accessible means of egress ..... 5.1.1.1.5(B), 5.5.4, A.5.5.4.1; *see also* Exit access; Impediments to egress
  Areas of refuge 5.2.12.2, 5.2.12.3.3, 7.2.26, A.5.2.12.2
  Definition 3.3.69.1
  Elevator lobbies 5.4.10
  Fire escape ladders 5.2.9.3
  Fire escape stairs ..... 7.2.24(D)
  Health care occupancies .... 5.1.1.1.3(A) Ex. 1, 5.1.1.1.3(A) Ex. 2
  Number of means of egress and 5.4.7
  Outside stairs 5.2.2.6.1
  Residential board and care occupancies, large ..... 5.1.1.1.6(A)
Aisle accessways ..... 5.15.2.2 to 5.15.2.4, 5.15.3, 5.15.5, A.5.15.2.2, A.5.15.3, A.5.15.5
  Definition 3.3.2, A.3.3.2
  Minimum width ..... 5.3.4.1 Ex. 3, 5.15.3.1, 5.15.3.2, 5.15.10.5, A.5.15.3.1
  Serving seating at tables 5.15.5, A.5.15.5
  Serving seating not at tables 5.15.3, A.5.15.3
Aisles 5.5.1.2, A.5.5.1.6
  Guards 5.2.2.4.1, A.5.2.2.4.1
  Handrails 5.15.4.7, 5.15.8, A.5.15.4.7, A.5.15.8.1
  Illumination of 5.8.1.1, A.5.8.1.1
  Marking 5.15.4.8, A.5.15.4.8
  Mercantile occupancies 5.5.1.29.5
  Minimum width ..... 5.3.4.1 Ex. 3, 5.3.4.8, 5.3.4.9, 5.3.4.12, 5.15.1, 5.15.2.2 to 5.15.2.4, 5.15.4.3, A.5.3.4.9.1, A.5.3.4.9.2, A.5.15.2.2
  Nonmain exits, access to 5.4.11.2
  Occupant load 5.3.1.3.2
  Serving seating at tables 5.15.6, A.5.15.6
  Serving seating not at tables 5.15.4, A.5.15.4.4
  Stairs and ramps ..... 5.15.4.4 to 5.15.4.8, A.5.15.4.4, A.5.15.4.5.2, A.5.15.4.8
  Termination, smoke protected assembly seating 5.15.10.7
Alarm systems
  Access-controlled egress doors and ..... 5.2.1.6.2(4)
  Assembly occupancies 5.5.1.9.3.4
  Doors, delayed egress locks on ..... 5.2.1.6.1(C), 5.2.1.6.1(D), A.5.2.1.6.1(C), A.5.2.1.6.1(D)
  Educational occupancies ..... 5.5.1.20 Ex. 2
  Impediments to egress 5.1.6, 5.2.1.5, A.5.2.1.5
Alterations ...*see* Existing structures, alterations, repairs, or change of occupancy in
Alternating tread devices 5.2.11, 5.4.1.2.3, 6.2.4.4, A.5.2.11
Ambulatory health care facilities
  Application of code to 1.3.1.4
  Arrangement of means of egress 5.5.1.22, 5.5.1.23
  Common paths of travel ..... Table 5.5.1.8
  Corridors 5.1.1.1.9
    Dead-end ..... Table 5.5.1.8
    Width 5.3.4.10
  Definition 3.3.74.1
  Doors ..... 5.2.1.6.1, Table 5.2.1.6.1, 5.2.1.6.2, Table 5.2.1.6.2, 5.2.1.8.2(7)
  Emergency lighting ..... Table 5.9.1.1
  Smoke barriers 5.14.2, A.5.14.2.5
  Sprinkler systems ..... 5.1.1.1.9, Table 5.6.1, 5.14.2.1 Ex. 2
  Travel distance limits ..... Table 5.6.1
Amusement buildings, special (definition) ..... 3.3.12.7, A.3.3.12.7; *see also* Assembly occupancies
Anchor stores 5.5.1.30.2.3, A.5.5.1.30.2.3
  Definition 3.3.4
Apartment buildings
  Areas of refuge ..... 5.2.12.1 Ex. 2
  Board and occupancy occupancies in 1.3.1.3
  Common paths of travel ..... Table 5.5.1.8
  Corridors ..... 5.1.1.1.5(A), 5.1.1.1.5(B)
    Dead-end ..... Table 5.5.1.8
    Width 5.3.4.5
  Day-care occupancies in 5.5.1.15
  Definition 3.3.12.1, A.3.3.12.1
  Doors ..... 5.2.1.6.1, Table 5.2.1.6.1, 5.2.1.6.2, Table 5.2.1.6.2, 5.2.1.10.2
  Egress capacity 5.3.3.3
  Emergency lighting ..... Table 5.9.1.1
  Exit distances ..... 5.5.1.4 Ex. 2
  Exit enclosures ..... 5.1.1.2.1(B) Ex.
  Marking of means of egress ..... Table 5.10.1.1
  Means of escape 1.3.2, 6.3
  Number of means of egress 5.4.1.3.1, 5.4.1.3.2
  Occupant load ..... 5.3.1.2, Table 5.3.1.2, A.5.3.1.2
  Sprinkler systems ..... 5.1.1.1.5(A), 5.1.1.1.5(B), 5.1.1.2.1(B) Ex., 5.4.1.3.1, Table 5.5.1.8, Table 5.6.1
  Stairs ..... 5.2.2.2.3.1, Table 5.2.2.2.3.1, 5.2.2.2.4, Table 5.2.2.2.4, 7.2.9, Table 7.2.9, A.5.2.2.2.4
    Fire escape 7.2.24, A.7.2.24
  Travel distance limits ..... Table 5.6.1
Application of code 1.3, A.1.3
Approved (definition) 3.2.1, A.3.2.1
Areas
  Floor .....*see* Floor area
  Hazardous .....*see* Hazardous areas
  Living .....*see* Living areas
  Of refuge ..... 5.2.12, 5.14.3.1 Ex. 2, A.5.2.12
    Accessibility 5.2.12.2, 5.2.12.3.3, 5.5.4.3, 5.5.4.6, 7.2.26, A.5.2.12.2
    Communication systems 5.2.12.2.5, 5.2.12.2.6, A.5.2.12.2.6
    Definition 3.3.6, A.3.3.6
    Existing construction 7.2.27
    Locked doors and 5.2.1.6.3.1
    Tenability performance criteria 5.2.12.3.2, A.5.2.12.3.2
    Wheelchair accommodation 5.2.12.3.1, 5.2.12.3.3, A.5.2.12.2.3, A.5.2.12.3.1
  Residential housing .....*see* Detention and correctional residential housing areas
Arenas
  Floor egress 5.5.1.17
  Main entrance/exit A.5.4.11.1
Assembly occupancies ..... Table A.1.3
  Arenas
    Floor egress 5.5.1.17
    Main entrance/exit A.5.4.11.1
  Arrangement of means of egress 5.5.1.9.3
  Common paths of travel ..... Table 5.5.1.8
  Corridors 5.1.1.1.1, 5.3.4.3
    Dead-end ..... Table 5.5.1.8
  Definition 3.3.74.2, A.3.3.74.2
  Doors ..... 5.2.1.4.2, Table 5.2.1.4.2, 5.2.1.6.1, Table 5.2.1.6.1, 5.2.1.6.2, Table 5.2.1.6.2, 5.2.1.7.1, Table 5.2.1.7.1, 5.2.1.10.2
    Locks ..... 5.2.1.5.2, Table 5.2.1.5.2
  Egress capacity ..... 5.3.3.1 Ex. 1

--`,,,-`-`,,`,,`,`,,`---
Copyright National Fire Protection Association
Provided by IHS under license with NFPA
No reproduction or networking permitted without license from IHS
Not for Resale

Emergency lighting ..... Table 5.9.1.1
Exits 5.4.11, A.5.4.11.1
Illumination of ..... 5.8.1.1 Ex. 2, 5.8.1.3 Ex.
Main 5.4.11.1, A.5.4.11.1
Marking of means of egress ..... Table 5.10.1.1
Means of escape 5.4.1.2.3
Minimum width of means of egress ..... 5.3.4.1 Ex. 3, 5.4.11.1, 5.4.11.2, A.5.4.11.1
Number of means of egress 5.4.1.2
Fenced outdoor occupancy ..... 5.4.2(3)
Occupant load ..... 5.3.1.1 Ex. 1, 5.3.1.2, Table 5.3.1.2, 5.3.1.3.3 to 5.3.1.3.5, 5.3.1.7, 5.4.1.2, 5.4.11.1, 5.4.11.2, A.5.3.1.2, A.5.4.11.1
Ramped aisles ..... 5.2.5.4 Ex.
Seating ..... *see* Seating
Sprinkler systems ..... 5.1.1.1.1(B), Table 5.5.1.8, Table 5.6.1
Stage area 5.3.1.7
Stairs ..... 5.2.2.2.3.1, Table 5.2.2.2.3.1, 5.4.11.1, 7.2.9, Table 7.2.9
Fire escape 7.2.24, A.7.2.24
Tents, illumination of exits in ..... 5.8.1.1 Ex. 2
Terraces as exit discharge 5.7.7
Travel distance limits ..... Table 5.6.1
Underground structures 5.5.1.9.3
Atmosphere
Common (definition) 3.3.7.1
Separate (definition) 3.3.7.2
Atriums ..... 5.14.1.1(C) Ex., 5.14.1.3 Ex. 1, 5.14.2.4 Ex.
Authority having jurisdiction (definition) 3.2.2, A.3.2.2
Automatic (definition) 3.3.8

-B-

Balconies, exit access 5.5.3
Capacity of means of egress 5.3.1.1
Educational occupancies ..... 5.1.1.1.2(A), 5.14.4.1 Ex. 1
Egress capacity 5.3.1.6
Existing construction ..... 7.2.18 to 7.2.20
As exit discharge component 5.7.4
Guards 5.2.2.4.1, A.5.2.2.4.1
Horizontal exits 5.2.4.5
As means of escape, in dwellings 6.2.4
Number of means of egress 5.4.1
Open stairways A.5.6.3
Outside stairs ..... 5.2.2.6.3 Ex. 1
Barriers
Fire ..... *see* Fire barriers
Fire barrier wall (definition) ..... 3.3.9.3 *see also* Fire barriers
Smoke ..... *see* Smoke barriers
Thermal (definition) 3.3.9.2, A.3.3.9.2
Bathroom doors ..... 5.5.1.13, 6.2.2, 6.2.3.1 Ex., 6.2.3.4, 6.5.4 Ex., 6.5.6, 6.6.6.3
Birth centers (definition) 3.3.10, A.3.3.10
Bleachers (definition) ..... 3.3.11; *see also* Grandstands
Board and care occupancies ..... *see* Residential board and care occupancies
Boiler rooms and similar spaces 5.12
Alternating tread devices ..... 5.2.11.1(4)
Fire escape ladders ..... 5.2.9.1(4)
Bowling establishments ..... 5.4.11.1 Ex. 1
Bridges (horizontal exits) 5.2.4.5
Existing construction ..... 7.2.18 to 7.2.20
As exit discharge component 5.7.4
Buildings ..... *see also* Apartment buildings; Bulk merchandising retail buildings; Covered mall buildings; Day-care homes; High-rise buildings; Special amusement buildings; Structures
Definition 3.3.12, A.3.3.12
Existing ..... *see also* Existing structures, alterations, repairs, or change of occupancy in
Definition 3.3.12.4, A.3.3.12.4
Flexible plan and open plan education occupancy or day-care 5.5.1.16
Definition 3.3.12.5, A.3.3.12.5
Occupied 5.2.1.1.3, A.5.2.1.1.3
Bulk merchandising retail buildings ..... 5.5.1.29.6 Ex., 5.5.1.31
Definition 3.3.12.2
Business occupancies ..... Table A.1.3
Areas of refuge ..... 5.2.12.1 Ex. 2
Common paths of travel ..... Table 5.5.1.8
Corridors 5.1.1.1.7
Dead-end ..... Table 5.5.1.8
Width 5.3.4.2, A.5.3.4.2
Definition 3.3.74.3, A.3.3.74.3
Doors ..... 5.2.1.4.1 Ex. 6, 5.2.1.4.2, Table 5.2.1.4.2, 5.2.1.6.1, Table 5.2.1.6.1, 5.2.1.6.2, Table 5.2.1.6.2, 5.2.1.10.2
Locks ..... 5.2.1.5.2, Table 5.2.1.5.2
Egress capacity 5.3.3.3, A.5.3.4.1
Emergency lighting ..... Table 5.9.1.1
Number of means of egress 5.4.1.5, 5.4.3
Occupant load ..... 5.3.1.2, Table 5.3.1.2, 5.4.1.5, A.5.3.1.2
Sprinkler systems ..... 5.1.1.1.7(C), 5.4.1.5.3, 5.4.1.5.4, Table 5.5.1.8, Table 5.6.1
Stairs ..... 5.2.2.2.3.1, Table 5.2.2.2.3.1, 7.2.9, Table 7.2.9
Fire escape 7.2.24, A.7.2.24
Travel distance limits ..... Table 5.6.1

-C-

Capacity of means of egress 5.3, A.5.3
High-hazard contents, occupancies with 5.11.2
Measurement of means of egress 5.3.2, A.5.3.2
Minimum width 5.3.4, 7.2.3, 7.2.28, A.5.3.4
Occupant load 5.3.1, A.5.3.1.2
Catwalks 5.4.1.2.3
Class A stores
Aisle width 5.3.4.12.2
Definition 3.3.14
Exit access 5.5.1.29.9, 5.5.1.30.2.2, A.5.5.1.30.1
Class B stores
Definition 3.3.15, A.3.3.15
Exit access 5.5.1.29.9, 5.5.1.30.2.2
Class C stores
Definition 3.3.16
Exit access 5.5.1.29.9
Number of means of egress 5.4.1.4.1
Closet doors 5.5.1.12, 6.2.3.3, 6.5.5, 6.6.6.2, A.5.5.1.12
Code (definition) 3.2.3, A.3.2.3
Common atmosphere (definition) 3.3.7.1
Common path of travel ..... 5.4.1.4.2, 5.4.1.5.3, 5.4.3 Ex., 5.4.5 Ex., 5.5.1.2 Ex. 2, 5.5.1.8, 7.2.30, A.5.5.1.6
Accessible means of egress ..... 5.5.4.1 Ex. 1
Definition 3.3.17, A.3.3.17
Mechanical equipment rooms, boiler rooms, and furnace rooms 5.12
Smoke-protected assembly seating 5.15.10.6
Communications systems
Areas of refuge 5.2.12.2.5, 5.2.12.2.6, A.5.2.12.2.6
Elevators 5.2.13.8, A.5.2.13.8
Correctional occupancies ..... *see* Detention and correctional occupancies
Corridors ..... *see also* Dead-end corridors; Exit access corridors
Hallways
Dwelling 6.2.5
Residential board and care occupancies ..... 6.6.3(1)
Means of escape
Lodging and rooming houses 6.5.10
Residential board and care occupancies ..... 6.6.3(1), 6.6.8, A.6.6.8.1
Courts 5.2.3.4, 5.7.1, A.5.7.1
Definition 3.3.18
Enclosed ..... 5.7.1 Ex. 3
Definition 3.3.18.1
Fire escape stairs serving ..... 7.2.24(C)(5)

Copyright National Fire Protection Association
Provided by IHS under license with NFPA
No reproduction or networking permitted without license from IHS
Not for Resale

Covered mall buildings
Arrangement of means of egress 5.5.1.30, A.5.5.1.30
Definition 3.3.12.3, A.3.3.12.3
Exit passageway ..... 5.1.1.2.1(C) Ex., 5.2.6.4 Ex. 2
Occupant load ..... Fig. 5.3.1.2, Table 5.3.1.2, A.5.3.1.2
Sprinkler systems ..... 5.5.1.30.1 Ex., Table 5.6.1
Covered malls
Common paths of travel ..... Table 5.5.1.8
Dead-end corridors ..... Table 5.5.1.8
Definition 3.3.19
Number of means of egress 5.4.1.4
Travel distance limits ..... Table 5.6.1

-D-

Dampers, fire/smoke ..... 5.2.12.3.4, 5.14.1.3 Ex. 2, 5.14.2.2 Ex., 5.14.3.9, 7.2.15, A.5.14.1.3
Day-care homes .....*see also* Day-care occupancies; Group day-care homes
Definition 3.3.21
Family day-care homes (definition) 3.3.39
Mixed occupancy provisions ..... 4.1.4.1 Ex.
Day-care occupancies ..... Table A.1.3
In apartment buildings 5.5.1.15
Arrangement of means of egress ... 5.5.1.12 to 5.5.1.16, A.5.5.1.12
Bathroom doors 5.5.1.13
Closet doors 5.5.1.12, A.5.5.1.12
Common paths of travel ..... Table 5.5.1.8
Corridors, dead-end ..... Table 5.5.1.8
Definition 3.3.74.4, A.3.3.74.4
Doors ..... 5.2.1.6.1, Table 5.2.1.6.1, 5.2.1.6.2, Table 5.2.1.6.2, 5.2.1.7.1, Table 5.2.1.7.1, 5.5.1.14.1 Ex. 2, 5.5.1.14.2 Ex. 2
Emergency lighting ..... Table 5.9.1.1
Flexible plan and open plan buildings 5.5.1.16
Definition 3.3.12.5, A.3.3.12.5
Occupant load ..... 5.3.1.2, Table 5.3.1.2, A.5.3.1.2
Self-preservation (definition) 3.3.91, A.3.3.91
Sprinkler systems ..... Table 5.5.1.8, 5.5.1.14.1 Ex. 1, 5.5.1.14.2 Ex. 1, Table 5.6.1
Travel distance limits ..... Table 5.6.1
Windows for rescue 5.5.1.14
Dead-end aisles 5.15.4.2, 5.15.10.7
Dead-end corridors 5.5.1.6, 5.5.1.8, 5.11.4, A.5.5.1.6, A.5.6.1
Definitions ..... Chap. 3
Delayed egress locks ..... 5.2.1.6.1, 5.9.1.1(4), 6.5.8 Ex., 6.6.6.4 Ex., A.5.2.1.6.1(C), A.5.2.1.6.1(D)
Detention and correctional occupancies ..... Table A.1.3; *see also* Use conditions
Application of code to 1.3.1.5, A.1.3.1.5
Arrangement of means of egress ..... 5.5.1.24 to 5.5.1.26
Common paths of travel ..... Table 5.5.1.8, 7.2.30
Corridors
Dead-end ..... Table 5.5.1.8
Width 5.3.4.11
Definition 3.3.74.5, A.3.3.74.5
Doors
Egress width ..... 5.2.1.2.3 Ex. 3
Exit stairs ..... 5.2.1.5.3 Ex. 5
Locks ..... 5.2.1.5.1 Ex. 5, 5.2.1.6.3, 5.5.2.1 Ex. 1, A.5.2.1.6.3
Sliding ..... 5.2.1.4.1 Ex. 1, 5.2.1.4.7 Ex. 1
Smoke barriers ..... 5.14.3.1 Ex. 2, 5.14.3.2(2), 5.14.3.4 Ex. 2, 5.14.3.6, 5.14.3.7, 7.2.34(2)
Emergency lighting ..... Table 5.9.1.1
Exit discharge ..... 5.7.1 Ex. 3, 5.7.2 Ex. 1
High-hazard contents in buildings housing 4.1.3.3
Horizontal exits ..... 5.2.4.1 Ex. 2, 5.2.4.3.1 Ex., 5.2.4.3.3 Ex., Table 5.2.4.3.4, 5.14.3.1 Ex. 1
Impediments to egress ..... 5.1.6 Ex. 2
Marking of means of egress ..... Table 5.10.1.1
Mixed occupancy provisions for 4.1.3
Number of means of egress 5.4.5, 5.4.6, A.5.4.6
Occupant load ..... 5.3.1.2, Table 5.3.1.2, A.5.3.1.2
Smoke barriers ..... 5.14.3, Table 7.2.31, 7.2.34, A.5.14.3
Smoke venting ..... 7.2.35, A.7.2.35(2)
Sprinkler systems ..... Table 5.5.1.8, Table 5.6.1, A.1.3
Stairs ..... 5.2.2.2.3.1, Table 5.2.2.2.3.1, 5.2.2.4.6.3 Ex. 2, 7.2.9, Table 7.2.9
Fire escape 7.2.24, A.7.2.24
Travel distance limits ..... Table 5.6.1, 7.2.32, Table 7.2.32, 7.2.34(2)
Detention and correctional residential housing areas 5.2.1.6.3.2, A.5.2.1.6.3
Definition 3.3.22
Smoke barriers 5.14.3
Subdivision of ..... 5.5.1.26, Table 5.5.1.26, 7.2.31, A.7.2.31
Door-closing devices ..... 5.1.1.1.3(C)(4), 5.1.1.2.1(C), 6.5.10 Ex., 6.6.8.4 Ex., A.5.1.1.1.3(C); *see also* Doors, Self-closing/automatic-closing
Doors ..... 5.2.1, A.5.2.1; *see also* Exits; Fire exit hardware; Panic hardware; *subheading* Doors *under specific occupancies*
Access-controlled 5.2.1.6.2
Areas of refuge 5.2.12.3.4, A.5.2.12.3.4
Balanced 5.2.1.13
Bathroom .....*see* Bathroom doors
Closet .....*see* Closet doors
Dutch ..... 5.1.1.1.3(C)(6)
Egress width ..... 5.2.1.2, 7.2.3, A.5.2.1.2.1, Fig. 5.2.1.2.1(a), Fig. A.5.2.1.2.1(b), A.5.2.1.2.2, Fig. A.5.2.1.2.2(a), Fig. A.5.2.1.2.2(b)
Elevators 5.2.13.4, 5.2.13.5, 5.4.9
To exit access rooms ..... 5.5.1.2 Ex. 3
As exit discharge component 5.7.4
Fire .....*see* Fire doors
Floor level on both sides of 5.2.1.3
In folding partitions 5.2.1.12
High-hazard contents, occupancies with 5.11.5
Hold-open devices ..... 5.1.1.1.3(C)(3)
Horizontal exits .....*see* Horizontal exits
Horizontal sliding .....*see* Horizontal sliding doors
Locks, latches, and alarm devices ..... 5.1.6 Ex. 1, 5.2.1.5, 5.2.1.6, 5.5.1.12, 5.5.1.13, Table 5.5.1.26, 5.5.2.1, A.5.2.1.5, A.5.2.1.6, A.5.5.1.12
Means of escape, locks and latches on ..... 6.2.2, 6.2.3.3 to 6.2.3.5, 6.5.5, 6.5.6, 6.5.8 to 6.5.10, 6.6.6.2 to 6.6.6.6, 6.6.8.3, A.6.2.3.5, A.6.5.8
As means of escape
Dwellings ..... 6.2.1.2, 6.2.1.3(1), 6.2.1.3(3), 6.2.3, A.6.2.3.5
Locks and latches .....*see subheading* Locks, latches, and alarm devices
Lodging and rooming houses ..... 6.5.2, 6.5.4, 6.5.6, 6.5.8 to 6.5.10, A.6.5.8
Residential board and care occupancies ..... 6.6.3(1), 6.6.6, 6.6.8.3, 6.6.8.4
Number of exit access 5.5.1.4, 7.2.29, A.5.5.1.4
Openings in ..... 5.1.1.1.3(E), 5.1.1.1.9
Powered ..... 5.2.1.2.3 Ex. 5, 5.2.1.4.7 Ex. 2, 5.2.1.9, A.5.2.1.9.1
Reentry through 5.2.1.5.3, A.5.2.1.5.3
Residential housing spaces, subdivision of ..... Table 7.2.31
Revolving ..... 5.2.1.2.3 Ex. 6, 5.2.1.4.1 Ex. 7, 5.2.1.10
Self-closing/automatic-closing ..... 5.1.1.1.5(C), 5.1.1.1.6(F), 5.2.1.8, 5.2.1.9.2, 5.2.12.3.4, 5.2.13.4, 5.13.3.5, 5.14.1.6, 6.5.2, 6.5.10, 6.6.8.4, 7.2.7, A.5.1.1.1.3(C), A.5.2.1.8.1, A.5.14.1.6
Horizontal exits 5.2.4.4.8, 7.2.17, A.5.2.4.4.8
In smoke barriers .....*see* Smoke barriers
In smoke partitions 5.13.3, 5.14.1.5, A.5.13.3.4
Smoke-resistant .....*see* Smoke-resistant doors
At stairs 5.2.1.5.3, 5.5.1.29.4, A.5.2.1.5.3
Swing and force to open .....*see* Swinging doors
Tight-fitting corridors ..... A.5.1.1.1, A.5.1.1.1.3(C)(1)
Turnstiles 5.2.1.11
Dormitories ..... Table A.1.3
Areas of refuge ..... 5.2.12.1 Ex. 2

Copyright National Fire Protection Association
Provided by IHS under license with NFPA
No reproduction or networking permitted without license from IHS
Not for Resale

Arrangement of means of egress 5.5.1.27
Common paths of travel ..... Table 5.5.1.8
Corridors ..... 5.1.1.1.5(A), 5.1.1.1.5(B)
Dead-end ..... Table 5.5.1.8
Width 5.3.4.4
Doors ..... 5.2.1.6.1, Table 5.2.1.6.1, 5.2.1.6.2, Table 5.2.1.6.2, 5.2.1.10.2
Egress capacity 5.3.3.3
Emergency lighting ..... Table 5.9.1.1
Exit discharge 5.7.9
Exit distances ..... 5.5.1.4 Ex. 2
Exit enclosures ..... 5.1.1.2.1(B) Ex.
Means of escape 1.3.2, 6.4
Number of means of egress 5.4.1.3.1
Occupant load ..... 5.3.1.1 Ex. 2, 5.3.1.2, Table 5.3.1.2, A.5.3.1.2
Sprinkler systems ..... 5.1.1.1.5(A), 5.1.1.1.5(B), 5.1.1.2.1(B) Ex., 5.4.1.3.1, Table 5.5.1.8, Table 5.6.1
Stairs, fire escape 7.2.24, A.7.2.24
Subdivision of ..... Table 7.2.31
Travel distance limits ..... Table 5.6.1, Table 7.2.32
Draperies 5.5.2.2
Drills ..... 5.2.10.1.1(1)
Duct penetrations ..... *see* Openings
Dwellings ..... Table A.1.3
Common paths of travel ..... Table 5.5.1.8
Corridors, dead-end ..... Table 5.5.1.8
Doors
Bathroom 5.5.1.13
Closet 5.5.1.12, A.5.5.1.12
Floor level on both sides of ..... 5.2.1.3 Ex. 1, 5.2.1.3 Ex. 2
As means of escape ..... 6.2.1.2, 6.2.1.3(1), 6.2.1.3(3), 6.2.3, A.6.2.3.5
Emergency lighting ..... 5.9.1.1(2) Ex.
Marking of means of egress ..... Table 5.10.1.1
Means of escape ..... 1.3.2(1), 6.2, A.6.2
Sprinkler systems ..... Table 5.5.1.8
Stairs ..... 5.2.2.2.3.1, Table 5.2.2.2.3.1, 5.2.2.2.4, Table 5.2.2.2.4, 5.2.2.3.2 Ex. 2, 7.2.9, Table 7.2.9, A.5.2.2.2.4
Dwelling units
Corridors ..... 5.1.1.1.5(B)
Definition 3.3.23
Doors ..... 5.2.1.2.3 Ex. 4, 5.2.1.5.5 Ex.
Means of egress 6.1.3
Means of escape 1.3.2, 6.3
Mixed occupancy provisions for 4.1.4, A.4.1.4
Number of means of egress 5.4.1.3.2
Stairs ..... 5.2.2.4.2 Ex. 2, 5.2.2.4.5.6 Ex.

-E-

Earthquake protection, elevators 5.2.13.11
Educational occupancies ..... Table A.1.3
Aisle width 5.3.4.8
Arrangement of means of egress ..... 5.5.1.14, 5.5.1.16, 5.5.1.18 to 5.5.1.20
Common paths of travel ..... Table 5.5.1.8
Corridors 5.1.1.1.2
Access ..... 5.5.1.20, 5.14.4.1 Ex. 1
Dead-end ..... Table 5.5.1.8
Obstructions 5.5.1.19
Width 5.3.4.7, 5.5.1.19
Definition 3.3.74.6, A.3.3.74.6
Doors ..... 5.2.1.4.6, 5.2.1.6.1, Table 5.2.1.6.1, 5.2.1.6.2, Table 5.2.1.6.2, 5.2.1.7.1, Table 5.2.1.7.1, 5.5.1.14.1 Ex. 2, 5.5.1.14.2 Ex. 2, 5.14.4.1 Ex. 1
Emergency lighting ..... Table 5.9.1.1
Exit accesses 5.5.1.20
Exit discharge 5.7.8
Flexible plan and open plan buildings 5.5.1.16
Definition 3.3.12.5, A.3.3.12.5
Floor location 5.5.1.18
Marking of means of egress ..... Table 5.10.1.1
Occupant load ..... 5.3.1.1 Ex. 1, 5.3.1.1 Ex. 2, 5.3.1.2, Table 5.3.1.2, A.5.3.1.2
Smoke barriers 5.14.4
Sprinkler systems ..... 5.1.1.1.2(B), Table 5.5.1.8, 5.5.1.14.1 Ex. 1, 5.5.1.14.2 Ex. 1, 5.5.1.20 Ex. 2, Table 5.6.1, 5.14.4.2 Ex.
Travel distance limits ..... Table 5.6.1
Windows for rescue 5.5.1.14
Egress, means of ..... *see* Means of egress
Electroluminescent (definition) 3.3.24, A.3.3.24
Elevated platforms
Alternating tread devices ..... 5.2.11.1(3)
Fire escape ladders ..... 5.2.9.1(3)
Elevators ..... 5.1.1.2.1(D) Ex., 5.2.13, A.5.1.1.2.1(D), A.5.2.13
Accessible means of egress 5.5.4.5, 5.5.4.7
Alternating tread devices ..... 5.2.11.1(2)
Areas of refuge, egress from 5.2.12.2.4, A.5.2.12.2.4, A.5.2.12.2.6
Bulk storage
Common paths of travel ..... Table 5.5.1.8
Dead-end corridors ..... Table 5.5.1.8
Number of means of egress 5.4.1.7.3, 5.4.1.7.4
Travel distance limits ..... Table 5.6.1
Communications 5.2.13.8, A.5.2.13.8
Doors 5.4.9
Earthquake protection 5.2.13.11
Evacuation system
Capacity 5.2.13.2
Definition 3.3.25
Fire escape ladders ..... 5.2.9.1(2)
Lobbies 5.2.13.2.2, 5.2.13.3, A.5.2.13.1
As areas of refuge A.5.2.12.3.4
Definition 3.3.26
Doors 5.2.13.4, 5.2.13.5
Definition 3.3.27
Exit access 5.4.10
Smoke detection A.5.2.13.9
Maintenance 5.2.13.10
Number of means of egress 5.4.7, 5.4.9
Operation 5.2.13.9, A.5.2.13.9
Power and control wiring 5.2.12.2.4, 5.2.13.7, A.5.2.13.7
Signs 5.10.8.2, A.5.10.8.2
Water protection 5.2.13.6, A.5.2.13.6
Emergency access openings (definition) 3.3.28
Emergency escape devices A.5.1
Emergency lighting 5.9, A.5.9
Enclosures
Exit ..... *see* Exits
Exit passageways 5.2.6.2
Ramps 5.2.5.5
Smokeproof ..... *see* Smokeproof enclosures
Stairs ..... *see* Stairs
Equivalency to code 1.4, A.1.4.1, A.1.4.2
Escalators 5.2.7
As exit discharge component 5.7.4
Illumination of 5.8.1.1, A.5.8.1.1
Escape, means of ..... *see* Means of escape
Evacuation capability
Definition 3.3.29, A.3.3.29
Impractical (definition) 3.3.29.1
Prompt (definition) 3.3.29.2
Slow (definition) 3.3.29.3
Evacuation plan, elevator as means of egress ..... 5.2.13.1(6)
Exhibits
Definition 3.3.30
Multilevel 5.4.12
Travel distance limits ..... Table 5.6.1
Existing (definition) 3.3.31
Existing buildings (definition) 3.3.12.4, A.3.3.12.4

--`,,,-`-`,,`,,`,`,,`---
Copyright National Fire Protection Association
Provided by IHS under license with NFPA
No reproduction or networking permitted without license from IHS
Not for Resale

Existing structures, alterations, repairs, or change of occupancy in ..... Chap. 7
Applicability of code to 1.3.3, 7.1, A.1.3
Areas of refuge 7.2.27
Doors 7.2.1, 7.2.4, 7.2.6
Enclosure protection 7.2.13
Exemptions from new construction requirements 7.2, A.7.2
Exit passageways enclosure openings 7.2.23
Exit signs 7.2.33
Fire escape ladders 7.2.25
Fire escape stairs 7.2.24, A.7.2.24
Horizontal exits
Bridges and balconies ..... 7.2.18 to 7.2.20
Fire barriers 7.2.14, 7.2.15, 7.2.16
Minimum width of exit access abutted by furniture/partitions 7.2.28
Ramps 7.2.21
Remoteness of exit and exit access doors 7.2.29
Stairs
Dimensional criteria 7.2.8, A.7.2.8
Enclosure and protection of 7.2.12
Guards and handrails ..... 7.2.11, 7.2.24(F), 7.2.24(H), A.7.2.11.6, A.7.2.24(H)
Exit access
Arrangement of means of egress and ..... 5.5.1.1 to 5.5.1.5, A.5.5.1.6
Clearly recognizable 5.5.2.2, A.5.5.2.2
Dead end corridors and 5.5.1.6, A.5.5.1.6
Definition 3.3.33
Educational occupancies 5.5.1.20
Exterior paths of 5.5.3
Illumination of 5.8, 5.9, A.5.8, A.5.9
Mercantile occupancies, through storerooms in ..... 5.5.1.29.9, 5.5.2.1 Ex. 2
Signs 5.10.1.4, A.5.10.1.4
Through adjoining rooms 5.5.1.7
Exit access corridors ..... 5.5.1.2, 5.5.1.4, 5.14.4.1 Ex. 1, A.5.5.1.4, A.5.5.1.6
Egress capacity 5.3.3.2
As exit discharge component 5.7.4
Guards 5.2.2.4.1, A.5.2.2.4.1
Health care occupancies 5.5.1.21.9
Illumination of 5.8.1.1, A.5.8.1.1
Minimum width ..... 5.3.4.2 to 5.3.4.7, 5.3.4.9 to 5.3.4.11, A.5.3.4.2, A.5.3.4.9.1
Obstructions 5.5.1.19
Residential board and care occupancies, large 5.1.1.1.6, 7.2.1
Residential occupancies 5.1.1.1.5
Separation of means of egress 5.1.1.1, A.5.1.1.1
Health care occupancies 5.1.1.1.3, A.5.1.1.1.3
Residential occupancies 5.1.1.1.5
Exit discharge 5.1.1.2.2, 5.7, A.5.7.1, A.5.7.10
Assembly occupancies 5.4.11, A.5.4.11.1
Definition 3.3.34
Educational occupancies 5.5.1.18
Elevators ..... 5.2.13.1(3), 5.5.4.7
Exit passageway width and 5.2.6.4, A.5.2.6.4
Horizontal exits ..... 5.2.4.4.1 Ex.
Illumination of 5.8, 5.9, A.5.8, A.5.9
Level of (definition) 3.3.34.1
Outside stairs ..... 5.2.2.6.3 Ex. 2
Parking structures with fuel dispensing 5.5.1.11
Signs identifying 5.2.2.5.4, 5.2.2.5.5, 5.7.5, A.5.2.2.5.4
Smokeproof enclosures 5.2.3.4
Stairs ..... 5.4.1.3.1(2)
Exit passageways 5.2.6, 5.5.1.2, 7.2.23, A.5.2.6, A.5.5.1.6
Enclosure 5.2.6.2
As exit discharge component 5.2.6.3, 5.7.4, 7.2.2
Floors 5.2.6.5
Guards 5.2.2.4.1, A.5.2.2.4.1
Health care occupancies ..... 5.4.13(5)
Illumination of 5.8.1.1, A.5.8.1.1
Smokeproof enclosures and 5.2.3.4
Width 5.2.6.4, A.5.2.6.4
Exits ..... *see also* Doors
Assembly occupancies 5.4.11, A.5.4.11.1
Clearly recognizable 5.5.2.2, A.5.5.2.2
Definition 3.3.32, A.3.3.32
Enclosures ..... 5.1.1.2.1 to 5.1.1.2.3, 5.5.1.4, 5.5.4.2, A.5.1.1.2.1(D), A.5.1.1.2.3
Horizontal ..... *see* Horizontal exits
Remotely located 5.5.1.3, 5.5.1.30.2.1, 7.2.29
Separation of means of egress ..... 5.1.1.2, A.5.1.1.2.1(D), A.5.1.1.2.3
Street floor 5.3.3.3
Exposition (definition) 3.3.35
Exposition facility (definition) 3.3.38.1
Exterior paths of exit access 5.5.3
Exterior stairs ..... *see* Outside stairs
Externally illuminated ..... *see* Illuminated

-F-

Facilities
Ambulatory health care ..... *see* Ambulatory health care facilities
Ancillary, industrial occupancies ..... *see* Industrial occupancies
Exposition (definition) 3.3.38.1
Limited care ..... *see* Limited care facilities
Family day-care homes (definition) 3.3.39
Festival seating 5.15.2.1
Definition 3.3.88.1, A.3.3.88.1
Fire alarm systems ..... 5.1.1.2.1(E) Ex.
Automatic-closing doors and ..... 5.2.1.8.2(6)
Health care occupancies ..... 5.14.2.6(1), A.5.1.1.1.3(C)
Fire barriers
Areas of refuge 5.2.12.3.4, 7.2.27, A.5.2.12.3.4
Existing construction 7.2.14, 7.2.15
Fire barrier wall (definition) 3.3.9.3
Group day-care homes 5.4.1.8.4
Guest rooms/suites and apartments ..... 5.4.1.3.2(3)
Horizontal exits 5.2.4.4, A.5.2.4.4.7, A.5.2.4.4.8
Stairs ..... 5.4.1.3.1(1), 6.5.2
Fire compartments 5.2.4.3, 5.4.5, 5.4.6, A.5.4.6
Fire detection systems ..... *see also* Smoke detection systems
Access-controlled egress doors and ..... 5.2.1.6.2(5)
Delayed egress locks and 5.2.1.6.1
Educational occupancies ..... 5.5.1.20 Ex. 2
Health care occupancies ..... 5.14.2.6(3)
Fire doors ..... 5.1.1.2.1(C)
Exit access corridors 5.1.1.1
Horizontal exits ..... 5.2.4.4.5 Ex., 5.2.4.4.8, 5.2.4.5.6, A.5.2.4.4.8
Near bridges and balconies 5.2.4.5.6
Fire escape ladders ..... *see* Ladders
Fire escape stairs 5.2.8, 6.5.1.1, 7.2.24, A.7.2.24
Fire exit hardware ..... 5.1.1.1.3(C)(2), 5.2.1.5.7, 5.2.1.7, 7.2.6, A.5.2.1.5.7
Definition 3.3.42
Fire-extinguishing systems, health care occupancies ..... 5.14.2.6(3)
Fire protection rating 5.2.4.4.1
Definition 3.3.86.1
Fire resistance, structural 5.14.3.3, A.5.14.3.3
Fire resistance rating
Areas of refuge 5.2.12.3.4, 7.2.27, A.5.2.12.3.4
Corridors ..... 5.1.1.1, 5.1.1.1.3(B), 5.1.1.1.6(C), 5.4.1.3.1(3), 5.5.1.4, 5.5.4.2, A.5.1.1.1.3(B), A.5.5.1.4
Definition 3.3.86.2
Exit construction ..... 5.1.1.2.1(A), 5.1.1.2.1(B)
Exit passageways 5.2.3.4, 5.2.6.3
Fire barriers, horizontal exits 5.2.4.4.1, 7.2.14
Guest rooms/suites and apartments ..... 5.4.1.3.1(5), 5.4.1.3.2(3)
Industrial occupancies ancillary facilities 5.5.1.10
Outside stairs 5.2.2.6.3
Residential board and care occupancies, large ..... 5.1.1.1.6(C), 5.1.1.1.6(D)

Copyright National Fire Protection Association
Provided by IHS under license with NFPA
No reproduction or networking permitted without license from IHS
Not for Resale

Residential occupancies, mixed occupancy provisions ..... 4.1.4.3 Ex. 1, 4.1.4.4 Ex.
Smoke barriers 5.5.1.9.3.2, 5.5.1.15, 5.5.4.6, 5.14.1.3, 5.14.2.2, 5.14.4.1, A.5.14.1.3
Stairs ..... 5.2.2.5.2 Ex., 5.2.2.5.3 Ex., 5.4.1.3.1(1), 5.4.1.7.3, 5.5.1.5, 7.2.12
Flexible plan and open plan education occupancy or day-care buildings 5.5.1.16
Definition 3.3.12.5, A.3.3.12.5
Floor area
Gross 5.3.1.2, A.5.3.1.2
Definition 3.3.46.1, A.3.3.46.1
Horizontal exits 5.2.4.3.4
Net 5.3.1.2, A.5.3.1.2
Definition 3.3.46.2
Occupant load and 5.3.1.2, A.5.3.1.2
Floors .....*see also* Street floor
Exit passageways 5.2.6.5
Exit signs, floor proximity A.5.10.1.6
Exit signs and egress path marking, floor proximity ... 5.10.1.5, 5.10.1.6, A.5.10.1.7, A.5.10.3
Illumination of exits 5.8.1.3, A.5.8.1.3
Means of escape to 5.4.1.2.3
Openings, guards for 5.2.2.4.1, A.5.2.2.4.1
Folding partitions, doors in 5.2.1.12
Folding seating 5.15.12
Formulas 1.5
Foyers .....*see* Lobbies
Furnace rooms 5.12

-G-

Galleries 5.4.1.2.3, 5.5.3
Garages .....*see also* Parking structures
Doors ..... 5.2.1.4.1 Ex. 6
General industrial occupancy (definition) 3.3.74.8.1, A.3.3.74.8.1
Grandstands 5.15.11
Definition 3.3.48
Gridirons 5.4.1.2.3
Definition 3.3.49
Gross floor area .....*see* Floor area
Gross leasable area (definition) 3.3.5.1.1
Group day-care homes
Definition 3.3.51
Number of means of egress 5.4.1.8
Stairs 5.4.1.8.2, 5.4.1.8.4
Guards (structural) 5.1.5
Components requiring 5.2.2.4.1, A.5.2.2.4.1
Definition 3.3.52
Ramps 5.2.2.4, 5.2.5.4, A.5.2.2.4
Seating 5.15.8, 5.15.11.3, 5.15.12.3, A.5.15.8.1
Stairs 5.2.2.4, 6.2.4.1, A.5.2.2.4
Existing guards on 7.2.11, A.7.2.11.6
Fire escape stairs ..... 7.2.24(F), 7.2.24(H), A.7.2.24(H)
Guest rooms 6.1.3
Arrangement of means of egress 5.5.1.27
Definition 3.3.53
Doors ..... 5.2.1.5.5 Ex.
Exit access corridors ..... 5.1.1.1.5(B)
Exit distances ..... 5.5.1.4 Ex. 2
Means of escape 1.3.2
Number of means of egress 5.4.1.3.1
Stairs ..... 5.2.2.4.2 Ex. 2
Travel distance limits ..... Table 5.6.1
Guest suites (definition) ..... 3.3.54; *see also* Guest rooms

-H-

Hallways, as means of escape
Dwellings 6.2.5
Residential board and care occupancies ..... 6.6.3(1)
Handrails
Aisles 5.15.4.7, 5.15.8, A.5.15.4.7, A.5.15.8.1
Alternating tread devices ..... 5.2.11.2(1), 5.2.11.2(2)
Changes of level of means of egress A.5.1.4.2
For children A.5.2.2.4.5.1, A.5.2.2.4.5.3
Definition 3.3.55
Ramps 5.2.2.4, 5.2.5.4, 5.15.4.7, 7.2.10, 7.2.11, A.5.2.2.4, A.5.15.4.7, A.7.2.11.6
Seating 5.15.8, 5.15.11.3, 5.15.12.3, A.5.15.8.1
Stairs 5.2.2.4, 6.2.4.1, 7.2.10, 7.2.11, A.5.2.2.4, A.7.2.11.6
Fire escape stairs ..... 7.2.24(F), 7.2.24(H)(5)
Hardware .....*see* Fire exit hardware; Latches; Locks; Panic hardware
Hazard of contents ..... 4.2, A.4.2.2.3, A.4.2.2.4; *see also* High-hazard contents; Low-hazard contents; Ordinary-hazard contents
Classification of 4.2.2
Educational occupancies ..... 5.5.1.20 Ex. 2
Hazardous areas
Definition 3.3.5.1.2
Exit access corridors ..... 5.1.1.1.3(A) Ex. 1, 5.1.1.1.3(A) Ex. 4, 5.1.1.1.5(B)
Intervening rooms, health care occupancies 5.5.1.21.5
Headroom, means of egress ..... 5.1.2, Table 7.2.8, Table 7.2.24(E), A.5.1.2
Alternating tread devices ..... 5.2.11.2(3)
Spiral stairs ..... 5.2.2.2.3.3(3)
Health care occupancies ..... Table A.1.3; *see also* Limited care facilities; Nursing homes; Residential board and care occupancies
Accessible means of egress ..... 5.5.4.1 Ex. 3
Ambulatory .....*see* Ambulatory health care facilities
Arrangement of means of egress ..... 5.5.1.21 to 5.5.1.23
Common paths of travel ..... Table 5.5.1.8
Corridors 5.1.1.1.3, A.5.1.1.1.3
Construction of corridor walls ..... 5.1.1.1.3(B), A.5.1.1.1.3(B)
Dead-end ..... Table 5.5.1.8
Width 5.3.4.9, 5.3.4.10, A.5.3.4.9.1
Definition 3.3.74.7, A.3.3.74.7
Doors ..... 5.1.1.1.3(C), A.5.1.1.1.3(B), A.5.1.1.1.3(C)
Automatic-closing ..... 5.2.1.8.2(6), 5.2.1.8.2(7)
Egress width 5.2.1.2.4
Exit stairs ..... 5.2.1.5.3 Ex. 4
Horizontal sliding ..... 5.2.1.14.2, 5.2.4.2.2 to 5.2.4.2.4
Locks ..... 5.2.1.5.1 Ex. 1, 5.2.1.5.1 Ex. 2, 5.2.1.6.1, Table 5.2.1.6.1, 5.2.1.6.2, Table 5.2.1.6.2, 5.5.2.1 Ex. 1
Swinging ..... 5.2.4.2.2 to 5.2.4.2.4
Egress capacity ..... Table 5.3.3.1
Emergency lighting ..... Table 5.9.1.1
High-hazard contents in buildings housing 4.1.2.3
Horizontal exits ..... 5.2.4.1 Ex. 1, 5.2.4.2, 5.2.4.3.1 Ex., 5.2.4.3.3 Ex., Table 5.2.4.3.4
Impediments to egress ..... 5.1.6 Ex. 2
Mixed occupancy provisions for 4.1.2
Number of means of egress 5.4.13, 5.4.14, A.5.4.14
Nurseries 5.2.1.2.4
Nurses' stations ..... 5.1.1.1.3(A) Ex. 1 to Ex. 4, A.5.1.1.1.3(A)
Occupant load ..... 5.3.1.2, Table 5.3.1.2, A.5.3.1.2
Smoke barriers 5.14.1, 5.14.2, A.5.14.1, A.5.14.2.5
Sprinkler systems ..... 5.2.1.8.2(6), Table 5.3.3.1, Table 5.5.1.8, Table 5.6.1, A.1.3
Stairs ..... 5.2.1.2.4 Ex. 2, 5.4.13(2)
Travel distance limits ..... Table 5.6.1
Waiting areas ..... 5.1.1.1.3(A) Ex. 2
High-hazard contents 4.2.2.4, A.4.2.2.4
Detention and correctional occupancies, building housing 4.1.3.3
Egress capacity factors ..... Table 5.3.3.1
Elevator as egress means ..... 5.2.13.1(4)
Health care occupancies, buildings housing 4.1.2.3
Special provisions for occupancies with 5.11, A.5.11.1
Storage occupancies ..... Table 5.5.1.8, Table 5.6.1
Towers ..... 5.4.1.10.1(5)
Travel distance limits, effect on 5.6.4

Copyright National Fire Protection Association
Provided by IHS under license with NFPA
No reproduction or networking permitted without license from IHS
Not for Resale

High-hazard industrial occupancies ..... Table A.1.3
Common paths of travel ..... Table 5.5.1.8
Dead-end corridors ..... Table 5.5.1.8
Definition 3.3.74.8.2, A.3.3.74.8.2
Slide escapes ..... 5.2.10.1.1(1), 5.2.10.2.2 Ex.
Travel distance limits ..... Table 5.6.1
High-rise buildings
Definition 3.3.12.6, A.3.3.12.6
Emergency lighting ..... 5.9.1.1(3)
Horizontal exits 5.2.4, A.5.2.4
Accessible means of egress 5.5.4.6
Bridges and balconies ..... 5.2.4.5, 7.2.18 to 7.2.20
Definition 3.3.32.1, A.3.3.32.1
Detention and correctional occupancies .....*see* Detention and correctional occupancies
Doors ..... 5.2.4.2.2 to 5.2.4.2.5, 5.2.4.3.3, 5.2.4.4.5 to 5.2.4.4.8, 5.2.4.5.6, 7.2.16, 7.2.17, A.5.2.1.4.5, A.5.2.4.4.7, A.5.2.4.4.8
Fire barriers 5.2.4.4, A.5.2.4.4.7, A.5.2.4.4.8
Existing construction 7.2.14, 7.2.15
Fire compartments 5.2.4.3
Health care occupancies ..... 5.2.4.1 Ex. 1, 5.2.4.2
As means of escape 6.5.1.1
Mercantile occupancies 5.5.1.29.3
Mixed occupancies 4.1.1.2
Horizontal sliding doors ..... 5.2.1.4.1 Ex. 1 to Ex. 5, 5.2.1.4.2, 5.2.1.4.7 Ex. 1, 5.2.1.14, 5.2.4.2.2 to 5.2.4.2.4
Horizontal exits, fire doors ..... 5.2.4.4.5 Ex.
In smoke barriers ..... 5.14.1.5, 5.14.1.7, 5.14.3.4 Ex. 2, A.5.14.1.7
Hospital (definition) ..... 3.3.60; *see also* Health care occupancies
Hotel occupancies ..... Table A.1.3
Areas of refuge ..... 5.2.12.1 Ex. 2
Arrangement of means of egress 5.5.1.27
Common paths of travel ..... Table 5.5.1.8
Corridors ..... 5.1.1.1.5(A), 5.1.1.1.5(B)
Dead-end ..... Table 5.5.1.8
Width 5.3.4.4
Definition 3.3.61, A.3.3.61
Doors ..... 5.2.1.6.1, Table 5.2.1.6.1, 5.2.1.6.2, Table 5.2.1.6.2, 5.2.1.10.2
Egress capacity 5.3.3.3
Emergency lighting ..... Table 5.9.1.1
Exit discharge 5.7.9
Exit distances ..... 5.5.1.4 Ex. 2
Exit enclosures ..... 5.1.1.2.1(B) Ex.
Means of escape 1.3.2, 6.4
Number of means of egress 5.4.1.3.1
Occupant load ..... 5.3.1.2, Table 5.3.1.2, A.5.3.1.2
Sprinkler systems ..... 5.1.1.1.5(A), 5.1.1.1.5(B), 5.1.1.2.1(B) Ex., 5.4.1.3.1, Table 5.5.1.8, Table 5.6.1
Stairs, fire escape 7.2.24, A.7.2.24
Travel distance limits ..... Table 5.6.1

-I-

Illuminated
Externally 5.10.5.1, 5.10.6
Definition 3.3.62.1, A.3.3.62.1
Internally 5.10.5.1, 5.10.7, A.5.10.7.2
Definition 3.3.62.2, A.3.3.62.2
Illumination of means of egress 5.8, 5.9, A.5.8, A.5.9
Emergency lighting 5.9, A.5.9
Signs, illumination of .....*see* Signs
Sources of illumination 5.8.2, A.5.8.2.1
Standby power ..... 5.9.1.1(5), 5.9.3
Impediments to egress 5.1.6, 5.2.1.5, 5.5.2, A.5.2.1.5, A.5.5.2.2
Means of escape ..... 6.2.2, 6.2.3.3 to 6.2.3.5, A.6.2.3.5
Industrial occupancies .... Table A.1.3; *see also* High-hazard industrial occupancies; Special-purpose industrial occupancies
Ancillary facilities 5.5.1.10, A.5.5.1.10.1, A.5.5.1.10.2
Arrangement of means of egress 5.5.1.10, A.5.5.1.10.1, A.5.5.1.10.2
Common paths of travel ..... Table 5.5.1.8
Corridors
Dead-end ..... Table 5.5.1.8
Exit access 5.1.1.1.8
Definition 3.3.74.8, A.3.3.74.8
Doors ..... 5.2.1.4.1 Ex. 6, 5.2.1.6.1, Table 5.2.1.6.1, 5.2.1.6.2, Table 5.2.1.6.2
Emergency lighting ..... Table 5.9.1.1
Fire escape ladders and industrial stairs ..... 5.2.9.2.1 Ex.
General industrial (definition) 3.3.74.8.1, A.3.3.74.8.1
Horizontal exits ..... 5.2.4.4.5 Ex.
Number of means of egress 5.4.1.6, 5.4.4
Occupant load ..... 5.3.1.2, Table 5.3.1.2, A.5.3.1.2
Sprinkler systems ..... 5.4.1.6, Table 5.5.1.8, Table 5.6.1
Stairs ..... 5.2.2.2.3.1, Table 5.2.2.2.3.1, 5.2.2.4.6.3 Ex.2, 7.2.9, Table 7.2.9
Fire escape 7.2.24, A.7.2.24
Travel distance limits ..... Table 5.6.1
Internally illuminated .....*see* Illuminated
International Building Code (IBC), occupancy classes compared A.1.3

-L-

Labeled (definition) 3.2.4
Ladders 5.4.1.2.3
In dwelling units 6.2.4.4
Fire escape 5.2.9
Basket 5.4.1.7.3
Portable A.5.1
In group day-care homes 5.4.1.8.2
Landings 5.2.2.3.2
As areas of refuge A.5.2.12.3.4
Door swing at 7.2.5
Guards 5.2.2.4.1, A.5.2.2.4.1
As means of escape, in dwellings 6.2.4
Ramps 5.2.5.3.2, 7.2.22
Stairs ..... 5.2.12.2.3, Table 7.2.8
Surfaces 5.2.2.3.3, A.5.2.2.3.3
Latches ..... 5.2.1.5, Table 5.5.1.26, A.5.2.1.5
Closet doors 5.5.1.12, A.5.5.1.12
Means of escape 6.2.3.3, 6.5.5, 6.5.10, 6.6.6.2, 6.6.6.6, 6.6.8.3
Leasable area, gross (definition) 3.3.5.1.1
Life safety evaluation
Definition 3.3.65
Seating 5.15.9, 5.15.10.2, A.5.15.9.1, A.5.15.9.3
Limited care facilities ..... Table A.1.3; *see also* Health care occupancies
Common paths of travel ..... Table 5.5.1.8
Corridors ..... 5.1.1.1.3(A) Ex. 4
Dead-end ..... Table 5.5.1.8
Width 5.3.4.9.2, A.5.3.4.9.1
Definition 3.3.38.2, A.3.3.38.2
Doors, egress width ..... 5.2.1.2.4(B)
Emergency lighting ..... Table 5.9.1.1
Horizontal exits ..... Table 5.2.4.3.4
Smoke barriers 5.14.1.4, 5.14.1.5, A.5.14.1.5
Sprinkler systems ..... Table 5.6.1
Travel distance limits ..... Table 5.6.1
Listed (definition) 3.2.5, A.3.2.5
Living areas ..... 5.1.1.1.6(B), 6.2.1.1, 6.2.4.4, 6.5.1.1, 6.6.2
Definition 3.3.5.1.3
Lobbies 5.5.1.7
Assembly occupancies 5.1.1.1.1, 5.4.11.1, A.5.4.11.1
Elevator .....*see* Elevators
As exit discharge ..... 5.7.2(B)Ex.
Locks 5.2.1.5, 5.5.2.1, A.5.2.1.5
Bathroom doors 5.5.1.13
Delayed egress ..... 5.2.1.6.1, 5.9.1.1(4), 6.5.8 Ex., 6.6.6.4 Ex.
Means of escape 6.2.2, 6.2.3.4, 6.2.3.5, 6.5.6, 6.5.8, 6.5.9, 6.6.6.3, 6.6.6.4, A.6.2.3.5, A.6.5.8
Special arrangements 5.2.1.6, A.5.2.1.6

Copyright National Fire Protection Association
Provided by IHS under license with NFPA
No reproduction or networking permitted without license from IHS
Not for Resale

Lodging or rooming houses ..... Table A.1.3
Common paths of travel ..... Table 5.5.1.8
Corridors
Dead-end ..... Table 5.5.1.8
Exit access ..... 5.1.1.1.5(C)
Definition 3.3.68
Doors ..... 5.1.1.1.5(C), 5.2.1.5.1 Ex. 4
As means of escape ... 6.5.2, 6.5.4, 6.5.6, 6.5.8 to 6.5.10, A.6.5.8
Means of escape ..... 1.3.2(4), 6.5, A.6.5.8
Sprinkler systems ..... Table 5.5.1.8
Stairs ..... 5.2.2.2.4, Table 5.2.2.2.4, A.5.2.2.2.4
Low-hazard contents 4.2.2.2
Automatic-closing doors and 5.2.1.8.2
Number of means of egress, storage occupancies 5.4.1.7.2
Storage occupancies ..... Table 5.5.1.8, Table 5.6.1

-M-

Means of egress
Accessible .....*see* Accessible means of egress
Arrangement of 5.5, A.5.5
Capacity of .....*see* Capacity of means of egress
Changes in level of 5.1.4, A.5.1.4.2
Definition 3.3.69, A.3.3.69, A.6.1
Existing structures ...*see* Existing structures, alterations, repairs, or change of occupancy in
Headroom .....*see* Headroom, means of egress
Illumination of .... 5.8, 5.10.4 to 5.10.7, A.5.8, A.5.10.4 to A.5.10.7
Impediments to egress .....*see* Impediments to egress
Marking of .....*see* Signs
Measurement of 5.3.2, A.5.3.2
Minimum width 5.3.4, 7.2.28, A.5.3.4
New construction .....*see* New construction
Number of 5.4, A.5.4
Separation of .....*see* Separation of means of egress
Means of escape ..... Chap. 6
Apartment buildings, dwelling units in 6.3
Applicability of code 1.3.2
Assembly occupancies 5.4.1.2.3
Bulk storage elevators 5.4.1.7.4
Definition 3.3.70, A.6.1
Dwellings 6.2, A.6.2
Group day-care homes 5.4.1.8
Guest rooms/suites in hotels and dormitories 6.4
Lodging and rooming houses 6.5, A.6.5.8
Residential board and care occupancies, small ..... 6.6, A.6.6.3(3)
Measurement
Of diagonal and exit separation distances 5.5.1.4, 7.2.29, A.5.5.1.4
Of means of egress 5.3.2, A.5.3.2
Of travel distance to exits 5.6, A.5.6
Units of 1.5
Mechanical equipment rooms 5.12
Mercantile occupancies .... Table A.1.3; *see also* Class A stores; Class B stores; Class C stores; Covered mall buildings; Covered malls
Aisles 5.3.4.12, 5.5.1.29.5
Areas of refuge ..... 5.2.12.1 Ex. 2
Arrangement of means of egress ..... 5.5.1.29 to 5.5.1.31, A.5.5.1.29.8
Carts, use of 5.5.1.29.8
Checkout stands, egress through 5.5.1.29.7
Common paths of travel ..... Table 5.5.1.8
Corridors 5.1.1.1.7
Dead-end ..... Table 5.5.1.8
Definition 3.3.74.9, A.3.3.74.9
Doors ..... 5.2.1.4.2, Table 5.2.1.4.2, 5.2.1.5.2, Table 5.2.1.5.2, 5.2.1.6.1, Table 5.2.1.6.1, 5.2.1.6.2, Table 5.2.1.6.2, 5.2.1.10.2
Egress capacity 5.3.3.3
Emergency lighting ..... Table 5.9.1.1
Exit discharge 5.7.10
Exterior wall entrance 5.5.1.29.6
Horizontal exits 5.5.1.29.3
Marking of means of egress ..... Table 5.10.1.1
Number of means of egress 5.4.1.4, 5.4.3
Occupant load ..... 5.3.1.2, Table 5.3.1.2, A.5.3.1.2
Outside exits 5.5.1.29.3
Sprinkler systems ..... 5.1.1.1.7(C), 5.4.1.4.1(2), Table 5.5.1.8, Table 5.6.1
Stairs ..... 5.2.2.2.3.1, Table 5.2.2.2.3.1, 7.2.9, Table 7.2.9
Doors at 5.5.1.29.4
Fire escape 7.2.24, A.7.2.2.4
Open stairs or ramps 5.5.1.29.1
Storerooms, exit access through ..... 5.5.1.29.9, 5.5.2.1 Ex. 2
Stores, classes of 5.3.4.12.2, 5.4.1.4, 5.5.1.29.9, 5.5.1.30.2.2, A.5.5.1.30.1
Travel distance limits ..... Table 5.6.1
Use of carts A.5.5.1.29.8
Mezzanines
Egress capacity 5.3.1.6
Guards for 5.2.2.4.1, A.5.2.2.4.1
Number of means of egress 5.4.1, 5.4.3
Open stairways A.5.6.3
Mirrors 5.5.2.2
Mixed occupancies 4.1
Assembly occupancies ..... 5.3.1.1 Ex. 1, 5.3.1.1 Ex. 2
Definition 3.3.74.10
Detention and correctional occupancies 4.1.3
Health care occupancies 4.1.2
Residential occupancies 4.1.4
Mobility impairments (severe) ...*see also* Wheelchair accommodation
Accessible means of egress 5.5.4.1, A.5.5.4.1
Changes in level of means of egress A.5.1.4.2
Definition 3.3.71
Doors, width of ..... 5.2.1.2.3 Ex. 2
Elevators used for egress A.5.2.12.2.4, A.5.2.12.2.6
Furniture and movable walls, egress width for A.5.3.4.1
Stairs used for egress A.5.2.12.2.6, A.5.2.12.3.1
Motels .....*see* Hotel occupancies
Moving walks 5.2.7, 5.7.4
Multilevel play structures (definition) 3.3.103.1

-N-

Net floor area .....*see* Floor area
New construction ..... Chap. 5
Application of code to 1.3.1, A.1.3
Arrangement of means of egress 5.5, A.5.5
Assembly occupancy seating, special provisions for ... 5.15, A.5.15
Capacity of means of egress 5.3, A.5.3
Measurement of means of egress 5.3.2, A.5.3.2
Minimum width 5.3.4, A.5.3.4
Occupant load 5.3.1, A.5.3.1.2
Changes in level of means of egress 5.1.4, A.5.1.4.2
Exit discharge 5.7, A.5.7.1, A.5.7.10
Guards .....*see* Guards (structural)
Headroom ..... 5.1.2, 5.2.2.2.3.3(3), 5.2.11.2(3), A.5.1.2
High-hazard contents, occupancies with 5.11, A.5.11.1
Illumination of means of egress 5.8, 5.9, A.5.8, A.5.9
Impediments to egress 5.1.6, 5.2.1.5, 5.5.2, A.5.2.1.5, A.5.5.2.2
Marking of means of egress 5.10, A.5.10
Means of egress components 5.2, A.5.2
Alternating tread devices 5.2.11, A.5.2.11
Areas of refuge 5.2.12, A.5.2.12
Doors 5.2.1, A.5.2.1
Elevators 5.2.13, A.5.2.13
Escalators and moving walks 5.2.7
Exit passageways 5.2.6, A.5.2.6
Fire escape ladders 5.2.9
Fire escape stairs 5.2.8
Horizontal exits 5.2.4, A.5.2.4
Ramps 5.2.5, A.5.2.5.2, A.5.2.5.6.1
Slide escapes 5.2.10

Copyright National Fire Protection Association
Provided by IHS under license with NFPA
No reproduction or networking permitted without license from IHS
Not for Resale

Smokeproof enclosures 5.2.3
Stairs 5.2.2, A.5.2.2
Mechanical equipment rooms, boiler rooms, and furnace rooms 5.12
Number of means of egress 5.4, A.5.4.6, A.5.4.14
Separation of means of egress 5.1.1
Exit access corridors 5.1.1.1, A.5.1.1.1
Exits ..... 5.1.1.2, A.5.1.1.2.1(D), A.5.1.1.2.3
Smoke barriers, subdivision of building space via 5.14, A.5.14
Smoke partitions, subdivision of building spaces via .. 5.13, A.5.13
Travel distance to exits, measurement of 5.6, A.5.6
Nursing homes ..... Table A.1.3; *see also* Health care occupancies
Common paths of travel ..... Table 5.5.1.8
Dead-end corridors ..... Table 5.5.1.8
Definition 3.3.73
Doors, egress width ..... 5.2.1.2.4(A)
Emergency lighting ..... Table 5.9.1.1
Horizontal exits ..... Table 5.2.4.3.4
Smoke barriers 5.14.1.4, 5.14.1.5, A.5.14.1.5
Sprinkler systems ..... Table 5.6.1
Travel distance limits ..... Table 5.6.1

-O-

Occupancies
Change of ...*see* Existing structures, alterations, repairs, or change of occupancy in
Definition 3.3.74
IBC classification compared to classifications of ..... A.1.3, Table A.1.3
Occupant load
Capacity of means of egress and 5.3.1, A.5.3.1.2
Definition 3.3.75
Increases 5.3.1.3
Number of means of egress and 5.4.2, 5.4.8
Occupiable story (definition) 3.3.101.1, A.3.3.101.1
One- and two-family dwellings .....*see* Dwellings
Open-air parking structures
Definition 3.3.103.3
Number of means of egress 5.4.1.7.5.2
Openings .....*see also* Doors
Areas of refuge 5.2.12.3.4, A.5.2.12.3.4
Emergency access (definition) 3.3.28
Exit enclosures ..... 5.1.1.2.1(C) to (F), A.5.1.1.2.1(D)
Exit passageways 5.2.6.3
Fire escape stairs, in existing construction ..... 7.2.24(C), A.7.2.24(C)
Health care occupancies ..... 5.1.1.1.3(E), 5.1.1.1.9
Horizontal exits
Bridges and balconies 5.2.4.5.6
Fire barriers ..... 5.2.4.4.1 to 5.2.4.4.4, 7.2.14, 7.2.15
Smoke barriers 5.14.3.4, A.5.14.3.4
Smoke partitions 5.13.4, A.5.13.4.3
Stairs ..... 5.2.2.5, 5.2.2.6.3 Ex. 3, 5.2.2.6.4, 5.5.1.5, A.5.2.2.5.2
Open plan .....*see* Flexible plan and open plan education occupancy or day-care buildings
Open structures
Definition 3.3.103.2, A.3.3.103.2
Egress capacity ..... 5.3.3.1 Ex. 2
Exit discharge ..... 5.7.2 Ex. 2
Exits, illumination of ..... 5.8.1.1 Ex. 3
Marking of means of egress ..... Table 5.10.1.1
Number of means of egress 5.4.1.9
Travel distance limits ..... 5.6.1 Ex. 1
Ordinary-hazard contents 4.2.2.3, A.4.2.2.3
Automatic-closing doors and 5.2.1.8.2
Storage occupancies ..... Table 5.5.1.8, Table 5.6.1
Outside exits 5.5.1.29.3
Outside ramps 5.2.5.6, A.5.2.5.6.1
Visual protection 5.2.5.6.1, A.5.2.5.6.1
Water accumulation 5.2.5.6.2
Outside stairs 5.2.2.6, 5.4.1.5.1, 5.4.1.5.2
Access 5.2.2.6.1
Definition 3.3.79
Elevators, means of egress from 5.4.1.7.3
As means of escape ..... 6.5.1.2 Ex., 6.5.3, 6.6.5
Openness 5.2.2.6.6
Parking structures with fuel dispensing ..... 5.5.1.11(2)
Separation and protection of 5.2.2.6.3, 5.2.2.6.4
Travel distance limits 5.6.5
Visual protection 5.2.2.6.2
Water accumulation 5.2.2.6.5, A.5.2.2.3.4

-P-

Panic A.1.2.1
Panic hardware 5.2.1.5.7, 5.2.1.7, 7.2.6, A.5.2.1.5.5, A.5.2.1.5.7
On balanced doors 5.2.1.13
Definition 3.3.80
Parking structures .....*see also* Open-air parking structures
Arrangement of means of egress 5.5.1.11
Common paths of travel ..... Table 5.5.1.8
Dead-end corridors ..... Table 5.5.1.8
With fuel dispensing 5.5.1.11
Number of means of egress 5.4.1.7.5
Sprinkler systems ..... Table 5.5.1.8
Travel distance limits ..... Table 5.6.1
Penetrations .....*see* Openings
Personal care (definition) 3.3.81, A.3.3.81
Photoluminescent
Definition 3.3.82, A.3.3.82
Signs 5.10.4, 5.10.7.2, A.5.10.4, A.5.10.7.2
Piers
Arrangement of means of egress 5.5.1.32
Number of means of egress 5.4.1.11
Sprinkler systems ..... 5.5.1.32(4)
Point of safety (definition) 3.3.83
Porches 5.5.3
Guards for 5.2.2.4.1, A.5.2.2.4.1
As means of escape, for dwellings 6.2.4
Portable fire escape devices A.5.1
Powered doors ..... 5.2.1.4.7 Ex. 2, 5.2.1.9, A.5.2.1.9.1
Public ways ... 5.2.3.4, 5.7.1, 5.8.1.1, 5.14.3.1 Ex. 2, A.5.7.1, A.5.8.1.1
Accessible means of egress 5.5.4.3
Areas of refuge opening to ..... 5.2.12.2.2 to 5.2.12.2.4, 7.2.26
Definition 3.3.84
Emergency lighting A.5.9.1.1

-Q-

Quick-response sprinklers ..... 5.1.1.1.3(A) Ex. 1

-R-

Ramps 5.1.4, 5.2.5, A.5.1.4.2, A.5.2.5.2, A.5.2.5.6.1
Aisle 5.15.4.4
Assembly occupancies 5.4.11.1
Construction 5.2.5.3.1
Definition 3.3.85
Dimensional criteria 5.2.5.2, 7.2.21, A.5.2.5.2
Drop-offs 5.2.5.3.4
Egress capacity 5.3.3.3
Enclosure and protection of 5.2.5.5
As exit discharge component 5.7.4
Guards 5.2.2.4, 5.2.5.4, 6.2.4.1, A.5.2.2.4
Handrails 5.2.2.4, 5.2.5.4, 5.15.4.7, 6.2.4.1, 7.2.10, 7.2.11, A.5.2.2.4, A.5.15.4.7, A.7.2.11.6
Health care occupancies ..... 5.4.13(4)
Illumination of 5.8.1.1, A.5.8.1.1
Industrial equipment access ..... 5.3.4.1 Ex. 4
Landings 5.2.5.3.2
As means of escape, for dwellings 6.2.1.2, 6.2.4
Minimum width 5.3.4.9, 5.3.4.11, A.5.3.4.9.1
New ramps in existing buildings 7.2.21
Open
Mercantile occupancies 5.5.1.29.1
Travel distance limits 5.6.3, A.5.6.3

--`,,`-`-`,,`,,`,`,,`---

Copyright National Fire Protection Association
Provided by IHS under license with NFPA
No reproduction or networking permitted without license from IHS

Not for Resale

Open-air parking structures 5.4.1.7.5.2, 5.4.1.7.5.3
Outside 5.2.5.6, A.5.2.5.6.1
Rating
Fire protection 5.2.4.4.1
Definition 3.3.86.1
Fire resistance ..... *see* Fire resistance rating
References ..... Chap. 2, Annex B
Repairs ..... *see* Existing structures, alterations, repairs, or change of occupancy in
Residential board and care occupancies
In apartment buildings 1.3.1.3
Application of code to 1.3.1.2, 1.3.1.3
Definition 3.3.74.12, A.3.3.74.12
Egress capacity ..... Table 5.3.3.1
Large ..... Table A.1.3
Application of code to 1.3.1.2
Arrangement of means of egress 5.5.1.28
Common paths of travel ..... Table 5.5.1.8
Corridors 5.1.1.1.6, 7.2.1
Dead-end ..... Table 5.5.1.8
Width 5.3.4.6
Definition 3.3.74.12.1
Doors ..... 5.1.1.1.6(D) to (F), 5.2.1.4.1 Ex. 4, 5.2.1.6.1, Table 5.2.1.6.1, 5.2.1.6.2, Table 5.2.1.6.2, 5.2.1.10.2, 7.2.1
Existing construction 7.2.1
Egress capacity 5.3.3.3
Emergency lighting ..... Table 5.9.1.1
Occupant load ..... 5.3.1.2, Table 5.3.1.2, A.5.3.1.2
Travel distance limits ..... Table 5.6.1
Mixed occupancy provisions 4.1.4.2, 4.1.4.4
Small ..... Table A.1.3
Common paths of travel ..... Table 5.5.1.8
Corridors, dead-end ..... Table 5.5.1.8
Definition 3.3.74.12.2
Doors, as means of escape ..... 6.6.3(1), 6.6.6, 6.6.8.3, 6.6.8.4
Marking of means of egress ..... Table 5.10.1.1
Means of escape ..... 1.3.2(5), 6.6, A.6.6.3(3)
Stairs ..... 5.2.2.2.4, Table 5.2.2.2.4, A.5.2.2.2.4
Travel distance limits ..... Table 5.6.1
Sprinkler systems ..... Table 5.5.1.8, Table 5.6.1, 7.2.1
Residential housing areas ..... *see* Detention and correctional residential housing areas
Residential occupancies ... Table A.1.3; *see also specific occupancies, e.g.* Apartment buildings
Common paths of travel ..... Table 5.5.1.8
Corridors
Dead-end ..... Table 5.5.1.8
Exit access 5.1.1.1.5
Definition 3.3.74.11, A.3.3.74.11
Doors ..... 5.2.1.5.5 Ex.
Emergency lighting ..... Table 5.9.1.1
Mixed occupancy provisions for 4.1.4
Occupant load ..... 5.3.1.2, Table 5.3.1.2, A.5.3.1.2
Sprinkler systems ..... 4.1.4.3 Ex. 2, Table 5.5.1.8, Table 5.6.1
Travel distance limits ..... Table 5.6.1
Revolving doors ..... 5.2.1.2.3 Ex. 6, 5.2.1.4.1 Ex. 7, 5.2.1.10
Roofs
Alternating tread devices, access using ..... 5.2.11.1(1)
Doors, locked or reentry allowed 5.2.1.5.4
Exit discharge ..... 5.7.1 Ex. 2
As exterior paths of exit access 5.5.3.1
Fire escape ladders, access using ..... 5.2.9.1(1)
Means of escape to 5.4.1.2.3
Openings, guards for 5.2.2.4.1, A.5.2.2.4.1
Rooming houses ..... *see* Lodging or rooming houses

-S-

Sally port (security vestibule) 5.5.1.25
Definition 3.3.87
Scope of code 1.2, A.1.2
Seating 5.15, A.5.15
Access and egress routes within assembly areas 5.15.2, A.5.15.2.2
Arena floor egress and 5.5.1.17
Automatic/self-rising 5.15.3.1
Continental A.5.15.3.3
Egress capacity ..... 5.3.3.1 Ex. 1
Festival 5.15.2.1
Definition 3.3.88.1, A.3.3.88.1
Folding and telescopic seating 5.15.12
Grandstands 5.15.11
Guards 5.15.8, 5.15.11.3, 5.15.12.3, A.5.15.8.1
Handrails 5.15.8, 5.15.11.3, 5.15.12.3, A.5.15.8.1
Layouts, approval of 5.15.7
Life safety evaluation 5.15.9, 5.15.10.2, A.5.15.9.1, A.5.15.9.3
Not at tables
Aisle accessways serving 5.15.3, A.5.15.3
Aisles serving 5.15.4, A.5.15.4.4
Occupant load 5.3.1.3.2
Rows, arranged in 5.15.1
Smoke-protected assembly ..... 5.15.3.3 Ex., 5.15.3.4 Ex., 5.15.10, A.5.15.10
Definition 3.3.88.2
At tables
Aisle accessways serving 5.15.5, A.5.15.5
Aisles serving 5.15.6, A.5.15.6
Security grilles ..... 5.2.1.4.1 Ex. 3, 5.2.1.4.2
Security vestibules (sally ports) 5.5.1.25
Definition 3.3.87
Self-closing (definition) ..... 3.3.89; *see also* Doors, Self-closing/automatic-closing
Self-luminous
Definition 3.3.90, A.3.3.90
Signs 5.10.4, A.5.10.4
Self-preservation (day-care occupancy) (definition) 3.3.91, A.3.3.91
Separate atmosphere (definition) 3.3.7.2
Separation of means of egress 5.1.1
Exit access corridors 5.1.1.1, A.5.1.1.1
Exit passageways 7.2.23
Exits ..... 5.1.1.2, A.5.1.1.2.1(D), A.5.1.1.2.3
Severe mobility impairments ..... *see* Mobility impairments (severe)
Shall (definition) 3.2.6
Should (definition) 3.2.7
Signs
Aisle marking 5.15.4.8, A.5.15.4.8
Areas of refuge .... 5.2.12.2.6, 5.2.12.3.5 to 5.2.12.3.7, A.5.2.12.2.6
Delayed egress locks on doors ..... 5.2.1.6.1(D), A.5.2.1.6.1(D)
Directional indicator 5.10.2, 5.10.6.2, A.5.10.2, A.5.10.6.2
Direction signs 5.10.2, A.5.10.2
Elevators 5.10.8.2, A.5.10.8.2
Exit 5.10.1.2, 5.10.1.3, 5.10.2, 5.10.3, A.5.10.1.2, A.5.10.1.6, A.5.10.1.7, A.5.10.2, A.5.10.3
Existing signs 7.2.33
Floor proximity, exit signs and egress path marking 5.10.1.5, 5.10.1.6, A.5.10.1.7, A.5.10.3
Size of 7.2.33
Exit access 5.10.1.4, A.5.10.1.4
Exit discharge 5.2.2.5.4, 5.2.2.5.5, 5.7.5, A.5.2.2.5.4
Exterior doors with locks ..... 5.2.1.5.2(1)
Fire barriers, horizontal exits ..... 5.2.4.4.6(2)
Illumination of ..... A.5.10.5 to A.5.10.7
Externally illuminated 5.10.5.1, 5.10.6
Definition 3.3.62.1, A.3.3.62.1
Internally illuminated 5.10.5.1, 5.10.7, A.5.10.7.2
Definition 3.3.62.2, A.3.3.62.2
Power source 5.10.4, A.5.10.4
Legend 5.10.3, A.5.10.3
Marking of means of egress 5.10, A.5.10
Changes of level A.5.1.4.2
Existing signs 7.2.33
Tactile signs 5.10.1.3

Copyright National Fire Protection Association
Provided by IHS under license with NFPA
No reproduction or networking permitted without license from IHS
Not for Resale

Visibility 5.10.1.7, A.5.10.1.7
"No Exit" 5.10.8.1, A.5.10.8.1
Powered doors 5.2.1.9
Sliding/rolling security doors or grilles ..... 5.2.1.4.2(2)
Stairs A.5.1.4.2
Egress direction signs 5.2.2.5.5
Identification signs 5.2.2.5.4, A.5.2.2.5.4
SI units 1.5
Sleeping rooms
Detention and correctional occupancies ..... 5.2.1.2.3 Ex. 3, 5.2.4.4.6(2), Table 7.2.32
Arrangement of means of egress 5.5.1.24
Smoke barriers 5.14.3.1, A.5.14.3.1
Group day-care homes 5.4.1.8.2
Health care occupancies ..... 5.1.1.1.3(A) Ex. 1, 5.2.1.2.4, 5.2.1.5.1 Ex. 1, 5.5.1.21.1 Ex. 2, 5.5.1.21.2, 5.5.1.21.3, 5.5.1.21.6, 5.5.1.21.10, A.5.1.1.1.3(C)
Lodging house ..... 5.1.1.1.5(C)
Means of escape ..... 6.2.1.1, 6.2.4.4, 6.5.1.1, 6.5.1.2, 6.5.2 Ex. 2, 6.5.10, 6.6.2, 6.6.3, 6.6.8.1, A.6.6.3(3), A.6.6.8.1
Residential board and care occupancies, large 5.1.1.1.6
Slide escapes 5.2.10
Sliding doors, horizontal .....*see* Horizontal sliding doors
Slip resistance 5.1.3.4, A.5.1.3.4, A.5.2.2.3.3, A.5.2.2.3.4
Smoke barriers .....*see also* Smoke partitions; Smoke-resistant walls
Accessible means of egress 5.5.4.6
Areas of refuge A.5.2.12.3.2
Day-care occupancies in apartment buildings 5.5.1.15
Definition 3.3.9.1, A.3.3.9.1
Detention and correctional occupancies ..... 5.14.3, Table 7.2.31, 7.2.34, A.5.14.3
Doors ..... 5.14.1.5 to 5.14.1.8, 5.14.2.5, 5.14.2.6, 5.14.3.1 Ex. 2, 5.14.3.2(2), 5.14.3.4 Ex. 2, 5.14.3.6, 5.14.3.7, 5.14.4.1 Ex. 1, A.5.2.1.4.5, A.5.14.1.5 to A.5.14.1.7, A.5.14.2.5
Educational occupancies 5.14.4
Health care occupancies ..... 5.1.1.1.3(B), 5.1.1.1.3(C)(4), 5.14.1, 5.14.2, A.5.14.1, A.5.14.2.5
Subdivision of building space via 5.14, A.5.14
Underground structures 5.5.1.9.3.2
Smoke compartments 5.4.5, 5.4.6, A.5.4.6
Definition 3.3.95, A.3.3.95
Detention and correctional occupancies 5.14.3.1, A.5.14.3.1
Educational occupancies 5.14.4
Health care occupancies ..... 5.1.1.1.3(A) Ex. 1, 5.1.1.1.3(A) Ex. 2, 5.4.14, 5.14.1.1, 5.14.2.1, A.5.4.14
Underground structures 5.5.1.9.3.2
Smoke control systems
Areas of refuge A.5.2.12.3.2
Covered mall buildings ..... 5.5.1.30.1 Ex., A.5.5.1.30.1
Smoke barriers, health care occupancies A.5.14.1.3
Underground structures 5.5.1.9.3.3
Smoke detection systems
Automatic-closing doors and ..... 5.2.1.8.2(3), 7.2.7
Detention and correctional occupancies ..... 5.14.3.9 Ex.
Elevator lobbies A.5.2.13.9
Health care occupancies ..... 5.1.1.1.3(A) Ex. 1, 5.1.1.1.3(A) Ex. 2, 5.1.1.1.3(A) Ex. 4, 5.14.2.1 Ex. 1, 5.14.2.6(2), A.5.1.1.1.3(C)
Smoke partitions .....*see also* Smoke barriers
Definition 3.3.96, A.3.3.96
Doors 5.13.3, A.5.13.3.4
Residential board and care occupancies, large ..... 5.1.1.1.6(E)
Subdivision of building spaces via 5.13, 7.2.31, A.5.12, A.7.2.31
Smokeproof enclosures 5.2.3
Definition 3.3.97, A.3.3.97
Elevators used for egress from areas of refuge 5.2.12.2.4
Emergency lighting ..... 5.9.1.1(5)
Existing construction 7.2.13
Health care occupancies ..... 5.4.13(3)
Smoke-protected assembly seating .....*see* Seating, Smoke-protected assembly
Smoke-protected seating ..... 5.15.3.4 Ex., 5.15.10, A.5.15.10
Smoke-resistant doors A.5.1.1.1
Areas of refuge A.5.2.12.3.2
Health care occupancy corridors ..... 5.1.1.1.3(C)(1), A.5.1.1.1.3(C)(1)
Residential board and care occupancies, large ... 5.1.1.1.6(D) Ex.
Smoke-resistant walls .....*see also* Smoke barriers; Smoke partitions
Areas of refuge ..... 5.2.12.1 Ex. 2
Lodging and rooming houses ..... 5.1.1.1.5(C)
Residential board and care occupancies, large ... 5.1.1.1.6(D) Ex.
Smoke venting ..... 7.2.35, A.7.2.35(2)
Snow and ice, on bridges and balconies 5.2.4.5.5
Special amusement buildings .....*see also* Assembly occupancies
Definition 3.3.12.7
Special-purpose industrial occupancies .... 5.3.1.2 Ex. 1, Table A.1.3
Arrangement of means of egress 5.5.1.10.2
Definition 3.3.74.8.3
Sprinkler systems ..... Table 5.6.1
Travel distance limits ..... Table 5.6.1
Sprinkler systems ..... 5.5.1.4 Ex. 1, A.1.3; *see also* Quick-response sprinklers; *subheading* Sprinkler systems *under specific occupancies*
Access-controlled egress doors and ..... 5.2.1.6.2(5)
Accessible means of egress ..... 5.5.4.1 Ex. 3, 5.5.4.2 Ex. 1
Areas of refuge ..... 5.2.12.1 Ex. 1, 5.2.12.1 Ex. 2, A.5.2.12.3.2
Automatic-closing doors and ..... 5.2.1.8.2(6)
Common path limit, effect on ..... Table 5.5.1.8
Dead-end corridor limit, effect on ..... Table 5.5.1.8
Delayed egress locks and 5.2.1.6.1
Exit enclosures ..... 5.1.1.2.1(B) Ex.
Exit passageways ..... 5.2.6.2 Ex., 7.2.23
Exits ..... 5.1.1.2.1(D) Ex., 5.1.1.2.1(E)
Fire barriers, horizontal exits ..... 5.2.4.4.3 Ex. 1
Smoke barriers ..... 5.14.2.1 Ex. 2, 5.14.4.2 Ex.
Travel distance limits, effect on ..... Table 5.6.1
Stairs ..... 5.1.1.2.1(D) Ex., 5.1.4, 5.2.2, A.5.1.4.2, A.5.2.2; *see also* Alternating tread devices; Fire escape stairs
As accessible means of egress 5.5.4.4
Aisle .....*see* Aisles
Areas of refuge, egress from 5.2.12.2.3, 7.2.26, A.5.2.12.2.3, A.5.2.12.2.6, A.5.2.12.3.1
Capacity of means of egress A.5.3.2
Construction 5.2.2.3.1
Dimensional criteria 5.2.2.2, A.5.2.2.2.4
Curved stairs 5.2.2.2.2
Existing stairs 7.2.8, A.7.2.8
Spiral stairs 5.2.2.2.3, 7.2.9
Standard stairs 5.2.2.2.1
Winders 5.2.2.2.4, A.5.2.2.2.4
Door swing at 7.2.5
Egress capacity 5.3.3.3
Emergency lighting ..... 5.9.1.1(5)
Enclosure and protection of ..... 5.2.2.5, 5.4.1.3.1(1), 5.4.1.5.1, 5.4.1.7.3, 5.9.1.1(5), 6.5.2, A.5.2.2.5.2
Areas of refuge A.5.2.12.3.4
Egress direction signs 5.2.2.5.5
Existing stairs 7.2.12
Identification signs 5.2.2.5.4, A.5.2.2.5.4
Interlocking or scissor stairs 5.5.1.5, A.5.5.1.5
Outside stairs 5.2.2.6.3
Usable space 5.2.2.5.3, A.5.2.2.5.3
As exit discharge component 5.2.6.3, 5.7.4, 7.2.2, A.5.7.10
Guards .....*see* Guards (structural)
Handrails 5.2.2.4, 6.2.4.1, 7.2.10, 7.2.11, A.5.2.2.4, A.7.2.11.6
Illumination of 5.8.1.1, A.5.8.1.1
Industrial equipment access ..... 5.3.4.1 Ex. 4
Interlocking or scissor 5.5.1.5, A.5.5.1.5
Landings .....*see* Landings
As means of escape .....*see also* Fire escape stairs
Apartment building dwelling units 6.3.2

Copyright National Fire Protection Association
Provided by IHS under license with NFPA
No reproduction or networking permitted without license from IHS
Not for Resale

Dwellings ..... 6.2.1.2, 6.2.1.3(1), 6.2.4
Lodging and rooming houses ..... 6.5.1.1, 6.5.1.2 Ex., 6.5.2, 6.5.3, 6.5.7
Residential board and care occupancies ..... 6.6.3(1), 6.6.4, 6.6.5, 6.6.7
Monumental ..... Fig. A.5.2.2.4.2
Open
Mercantile occupancies 5.5.1.29.1
Travel distance limits 5.6.3, A.5.6.3
Outside .....*see* Outside stairs
Reentry doors 5.2.1.5.3, A.5.2.1.5.3
Riser height ..... 5.2.2.3.5, 5.2.2.3.6, 5.15.4.6, Table 7.2.8, Table 7.2.24(E)
Spiral ..... 5.4.1.2.3, 6.2.4.3, Table 7.2.24(E)
Swinging ..... 7.2.24(H), A.7.2.24(H)
Travel distance limits 5.6.5
Treads ..... 5.1.4.2, 5.2.2.3.3 to 5.2.2.3.6, 5.15.4.5, 5.15.4.8, Table 7.2.8, Table 7.2.24(E), A.5.1.3.4
Winders ..... 6.2.4.3, 6.5.7, 6.6.7.2, Table 7.2.24(E)
Standby power ..... 5.9.1.1(5), 5.9.3
Storage occupancies ..... Table A.1.3
Common paths of travel ..... Table 5.5.1.8
Corridors 5.1.1.1.8
Dead-end ..... Table 5.5.1.8
Definition 3.3.74.13, A.3.3.74.13
Doors ..... 5.2.1.4.1 Ex. 6, 5.2.1.6.1, Table 5.2.1.6.1, 5.2.1.6.2, Table 5.2.1.6.2
Emergency lighting ..... Table 5.9.1.1
Horizontal exits ..... 5.2.4.4.5 Ex.
Number of means of egress 5.4.1.7
Occupant load ..... 5.3.1.2, Table 5.3.1.2, A.5.3.1.2
Slide escapes ..... 5.2.10.1.1(2)
Sprinkler systems ..... 5.4.1.7.1, Table 5.5.1.8, Table 5.6.1
Stairs ..... 5.2.2.2.3.1, Table 5.2.2.2.3.1, 5.2.2.4.6.3 Ex.2, 7.2.9, Table 7.2.9
Fire escape 7.2.24, A.7.2.2.4
Travel distance limits ..... Table 5.6.1
Stores .....*see* Mercantile occupancies
Story (building)
Definition 3.3.101
Occupiable (definition) 3.3.101.1
Street floor 5.5.1.29.2, 5.5.1.29.4
Definition 3.3.102, A.3.3.102
Structural fire resistance 5.14.3.3, A.5.14.3.3
Structures ....*see also* Buildings; Existing structures; Open-air parking structures; Open structures; Towers; Water-surrounded structures; Windowless structures
Definition 3.3.103, A.3.3.103
Multilevel play structures (definition) 3.3.103.1
Swinging doors ..... 5.2.1.4, 5.2.4.2.2 to 5.2.4.2.4, A.5.2.1.4.1, A.5.2.1.4.5
Horizontal exits ... 5.2.4.4.5 Ex., 5.2.4.4.6, 5.2.4.5.4, 7.2.16, 7.2.19
Landings, door swing at 7.2.5
In smoke barriers 5.14.1.5, 5.14.1.7, A.5.14.1.5, A.5.14.1.7

-T-

Telescopic seating 5.15.12
Terraces 5.7.7
Thermal barriers (definition) 3.3.9.2
Title of code 1.1
Towers
Alternating tread devices ..... 5.2.11.1(3)
Definition 3.3.105
Elevators used for egress from 5.2.13.1, A.5.2.13.1
Exit discharge ..... 5.7.2 Ex. 3
Fire escape ladders ..... 5.2.9.1(3)
Illumination of means of egress ..... 5.8.1.1 Ex. 3, 5.9.1.1 Ex. 1
Marking of means of egress ..... Table 5.10.1.1
Number of means of egress 5.4.1.10
Occupant load ..... 5.3.1.2 Ex. 2
Sprinkler systems 5.4.1.10.2
Travel distance limits ..... 5.6.1 Ex. 2
Transfer grilles ..... 5.1.1.1.3(D), 5.1.1.1.5(C), 5.1.1.1.6(E), 6.5.10, 6.6.8.2
Travel distance to exits, measurement of ..... 5.6, 7.2.32, 7.2.34(2), A.5.6
Tread devices, alternating .....*see* Alternating tread devices
Turnstiles 5.2.1.11
Two-family dwellings .....*see* Dwellings

-U-

Underground structures
Arrangement of means of egress 5.5.1.9
Assembly occupancies 5.5.1.9.3
Definition 3.3.103.4, A.3.3.103.4
Emergency lighting ..... 5.9.1.1(2)
Grain elevators ..... Table 5.5.1.8, Table 5.6.1
Mercantile occupancies 5.5.1.29.2
Units of measurement 1.5
Use condition I — free egress — detention and correctional occupancy 1.3.1.5, A.1.3.1.5
Definition 3.3.107
Use condition II — zoned egress — detention and correctional occupancy ... Table 5.5.1.8, Table 5.5.1.26, Table 7.2.31
Definition 3.3.108
Use condition III — zoned impeded egress — detention and correctional occupancy ..... Table 5.5.1.8, Table 5.5.1.26, Table 7.2.31, A.5.2.1.6.3
Definition 3.3.109
Use condition IV — impeded egress — detention and correctional occupancy ..... Table 5.5.1.8, Table 5.5.1.26, Table 7.2.31, A.5.2.1.6.3
Definition 3.3.110
Use condition V — contained — detention and correctional occupancy ..... Table 5.5.1.8, A.5.2.1.6.3
Definition 3.3.111

-V-

Vestibules
Emergency lighting and standby power ..... 5.9.1.1(5)
As exit discharge ..... 5.7.2(B) Ex.
Sally port (security vestibule) 5.5.1.25
Definition 3.3.87
Smokeproof enclosures 5.2.3.3

-W-

Walking surfaces in means of egress 5.1.3, 5.2.2.3.3, 7.2.2, A.5.1.3.4, A.5.2.2.3.3
Walls, fire barrier (definition) ..... 3.3.9.3; *see also* Fire barriers
Water-surrounded structures
Definition 3.3.103.5
Illumination of means of egress ..... 5.9.1.1 Ex. 2
Marking of means of egress ..... Table 5.10.1.1
Wheelchair accommodation
Aisles serving seating at tables A.5.15.6.2
Areas of refuge ..... 5.2.12.2.3 Ex. 2, 5.2.12.3.1, 5.2.12.3.3, A.5.2.12.3.1
Windowless structures ..... 5.5.1.21.10, 5.9.1.1(2)
Definition 3.3.103.6
Windows 5.2.1.1.2
Exit passageways
Fire windows in ..... 5.2.6.2 Ex.
Fixed wire glass panels in 7.2.23
As means of escape ..... 5.4.1.8.3, 5.4.1.8.4, 6.2.1.3(3), 6.6.1 Ex. 1, 6.6.3(3), A.6.2.1.3(3), A.6.6.3(3)
Near bridges and balconies 5.2.4.5.6
For rescue 5.5.1.14
Smoke venting ..... 7.2.35(1)

-Y-

Yards 5.2.3.4, 5.7.1, A.5.7.1
Definition 3.3.115

Copyright National Fire Protection Association
Provided by IHS under license with NFPA
No reproduction or networking permitted without license from IHS
Not for Resale