NFPA 1003

Standard for Airport Fire Fighter Professional Qualifications

2005 Edition

NFPA, 1 Batterymarch Park, Quincy, MA 02169-7471
An International Codes and Standards Organization

Copyright National Fire Protection Association
Provided by IHS under license with NFPA
No reproduction or networking permitted without license from IHS
Not for Resale

IMPORTANT NOTICES AND DISCLAIMERS CONCERNING NFPA DOCUMENTS

NOTICE AND DISCLAIMER OF LIABILITY CONCERNING THE USE OF NFPA DOCUMENTS

NFPA codes, standards, recommended practices, and guides, of which the document contained herein is one, are developed through a consensus standards development process approved by the American National Standards Institute. This process brings together volunteers representing varied viewpoints and interests to achieve consensus on fire and other safety issues. While the NFPA administers the process and establishes rules to promote fairness in the development of consensus, it does not independently test, evaluate, or verify the accuracy of any information or the soundness of any judgments contained in its codes and standards.

The NFPA disclaims liability for any personal injury, property or other damages of any nature whatsoever, whether special, indirect, consequential or compensatory, directly or indirectly resulting from the publication, use of, or reliance on this document. The NFPA also makes no guaranty or warranty as to the accuracy or completeness of any information published herein.

In issuing and making this document available, the NFPA is not undertaking to render professional or other services for or on behalf of any person or entity. Nor is the NFPA undertaking to perform any duty owed by any person or entity to someone else. Anyone using this document should rely on his or her own independent judgment or, as appropriate, seek the advice of a competent professional in determining the exercise of reasonable care in any given circumstances.

The NFPA has no power, nor does it undertake, to police or enforce compliance with the contents of this document. Nor does the NFPA list, certify, test or inspect products, designs, or installations for compliance with this document. Any certification or other statement of compliance with the requirements of this document shall not be attributable to the NFPA and is solely the responsibility of the certifier or maker of the statement.

Copyright National Fire Protection Association
Provided by IHS under license with NFPA
No reproduction or networking permitted without license from IHS
Not for Resale

ADDITIONAL NOTICES AND DISCLAIMERS

Updating of NFPA Documents

Users of NFPA codes, standards, recommended practices, and guides should be aware that these documents may be superseded at any time by the issuance of new editions or may be amended from time to time through the issuance of Tentative Interim Amendments. An official NFPA document at any point in time consists of the current edition of the document together with any Tentative Interim Amendments and any Errata then in effect. In order to determine whether a given document is the current edition and whether it has been amended through the issuance of Tentative Interim Amendments or corrected through the issuance of Errata, consult appropriate NFPA publications such as the National Fire Codes® Subscription Service, visit the NFPA website at www.nfpa.org, or contact the NFPA at the address listed below.

Interpretations of NFPA Documents

A statement, written or oral, that is not processed in accordance with Section 6 of the Regulations Governing Committee Projects shall not be considered the official position of NFPA or any of its Committees and shall not be considered to be, nor be relied upon as, a Formal Interpretation.

Patents

The NFPA does not take any position with respect to the validity of any patent rights asserted in connection with any items which are mentioned in or are the subject of NFPA codes, standards, recommended practices, and guides, and the NFPA disclaims liability for the infringement of any patent resulting from the use of or reliance on these documents. Users of these documents are expressly advised that determination of the validity of any such patent rights, and the risk of infringement of such rights, is entirely their own responsibility.

NFPA adheres to applicable policies of the American National Standards Institute with respect to patents. For further information contact the NFPA at the address listed below.

Law and Regulations

Users of these documents should consult applicable federal, state, and local laws and regulations. NFPA does not, by the publication of its codes, standards, recommended practices, and guides, intend to urge action that is not in compliance with applicable laws, and these documents may not be construed as doing so.

Copyrights

This document is copyrighted by the NFPA. It is made available for a wide variety of both public and private uses. These include both use, by reference, in laws and regulations, and use in private self-regulation, standardization, and the promotion of safe practices and methods. By making this document available for use and adoption by public authorities and private users, the NFPA does not waive any rights in copyright to this document.

Use of NFPA documents for regulatory purposes should be accomplished through adoption by reference. The term "adoption by reference" means the citing of title, edition, and publishing information only. Any deletions, additions, and changes desired by the adopting authority should be noted separately in the adopting instrument. In order to assist NFPA in following the uses made of its documents, adopting authorities are requested to notify the NFPA (Attention: Secretary, Standards Council) in writing of such use. For technical assistance and questions concerning adoption of NFPA documents, contact NFPA at the address below.

For Further Information

All questions or other communications relating to NFPA codes, standards, recommended practices, and guides and all requests for information on NFPA procedures governing its codes and standards development process, including information on the procedures for requesting Formal Interpretations, for proposing Tentative Interim Amendments, and for proposing revisions to NFPA documents during regular revision cycles, should be sent to NFPA headquarters, addressed to the attention of the Secretary, Standards Council, NFPA, 1 Batterymarch Park, P.O. Box 9101, Quincy, MA 02269-9101.

For more information about NFPA, visit the NFPA website at www.nfpa.org.

Copyright National Fire Protection Association
Provided by IHS under license with NFPA
No reproduction or networking permitted without license from IHS
Not for Resale

Copyright © 2005, National Fire Protection Association, All Rights Reserved

NFPA 1003

Standard for

Airport Fire Fighter Professional Qualifications

2005 Edition

This edition of NFPA 1003, *Standard for Airport Fire Fighter Professional Qualifications*, was prepared by the Technical Committee on Fire Fighter Professional Qualifications, released by the Technical Correlating Committee on Professional Qualifications, and acted on by NFPA at its November Association Technical Meeting held November 13–17, 2004, in Miami Beach, FL. It was issued by the Standards Council on January 14, 2005, with an effective date of February 7, 2005, and supersedes all previous editions.

This edition of NFPA 1003 was approved as an American National Standard on February 7, 2005.

Origin and Development of NFPA 1003

In 1972, the Joint Council of National Fire Service Organizations (JCNFSO) created the National Professional Qualifications Board for the Fire Service (NPQB) to facilitate the development of nationally applicable performance standards for uniformed fire service personnel. On December 14, 1972, the Board established four technical committees to develop those standards using the National Fire Protection Association (NFPA) standards-making system. The initial committees addressed the following career areas: fire fighter, fire officer, fire service instructor, and fire inspector and investigator.

The Committee on Fire Fighter Professional Qualifications met regularly from 1976 to 1978 to produce the first edition of this document. Adopted by the Association in 1978, NFPA 1003 was the third in the series of fire fighter professional qualifications standards.

The original concept of the professional qualification standards, as directed by the JCNFSO and the NPQB, was to develop an interrelated set of performance standards specifically for the fire service. The various levels of achievement in the standards were to build upon each other within a strictly defined career ladder. In the late 1980s, revisions of the standards recognized that the documents should stand upon their own merit in terms of job performance requirements for a given field. Accordingly, the strict career ladder concept was abandoned, except for the progression from fire fighter to fire officer. The later revisions, therefore, facilitated the use of the documents by other than the uniformed fire services.

In 1990, responsibility for the appointment of professional qualifications committees and the development of the professional qualifications standards was assumed by the NFPA. The Correlating Committee for Professional Qualifications Standards was appointed by the NFPA Standards Council in 1990 and assumed the responsibility for coordinating the requirements of all of the professional qualifications documents.

The intent of the technical committee was to develop clear and concise job performance requirements that can be used to determine that an individual, when measured to the standard, possesses the skills and knowledge to perform as an airport fire fighter. The committee further contends that these job performance requirements can be used in any fire department in any city, town, or private organization throughout North America.

Changes in the standard for the 2005 edition include the requirement that for certification as an airport fire fighter, the candidate meet the requirements for Fire Fighter II defined in NFPA 1001, *Standard for Fire Fighter Professional Qualifications*.

The 2005 edition includes changes to bring the standard in conformance with the NFPA *Manual of Style for NFPA Technical Committee Documents* requirements. The Technical Committee would like to thank the members of the Airport Fire Fighter Task Group who provided them with valuable time and expertise in the development of this document. These individuals are Hugh Pike, Chair; Kenneth Gilliam; Jim Goodbread; Don Hilderbrand; Jim Hotell; Bob Lindstrom; Greg Ranard; and Gary Schott.

Copyright National Fire Protection Association
Provided by IHS under license with NFPA
No reproduction or networking permitted without license from IHS
Not for Resale

Technical Correlating Committee on Professional Qualifications

Barbara L. Koffron, *Chair*
Phoenix Fire Department, AZ [U]

Stephen P. Austin, State Farm Insurance Companies, DE [I]
Rep. International Assn. of Arson Investigators Inc.
Timothy L. Bradley, North Carolina Fire Commission, NC [E]
Rep. TC on Fire Service Instructor Pro Qual
(Vote Limited to Pro Qual)
Richard W. Carlson, Okolona Fire Department, KY [U]
Rep. TC on Fire Inspector Pro Qual
(Vote Limited to Pro Qual)
Boyd F. Cole, SunnyCor Inc./SmartCoat Inc., CA [M]
Rep. TC on Emergency Vehicle Mechanic Technicians Pro Qual
(Vote Limited to Pro Qual)
Jim A. Crawford, Vancouver Fire Department, WA [E]
Rep. TC on Fire Marshal Pro Qual
(Vote Limited to Pro Qual)
Yves Desjardins, Ecole nationale des pompiers du Quebec, Canada [U]
David T. Endicott, Endicott & Associates, MD [U]
Rep. TC on Fire Fighter Pro Qual
(Vote Limited to Pro Qual)
Douglas P. Forsman, Union Colony Fire & Rescue Authority, CO [E]
Rep. Louisiana State University
Carl Goodson, Fire Protection Publications, WA [M]
Rep. TC on Rescue Technician Pro Qual
(Vote Limited to Pro Qual)
Jon C. Jones, Jon Jones & Associates, MA [SE]
Rep. TC on Industrial Fire Brigades Pro Qual
(Vote Limited to Pro Qual)
Alan E. Joos, Utah Fire and Rescue Academy, UT [E]
Rep. International Fire Service Accreditation Congress
Charles E. Kirtley, City of Guymon Oklahoma Fire Department, OK [U]
Rep. TC on Public Fire Educator Pro Qual
(Vote Limited to Pro Qual)
Michael J. McGovern, Lakewood Fire Department, WA [U]
Gerard J. Naylis, U.S. Consumer Product Safety Commission, NY [C]
Rep. TC on Fire Investigator Pro Qual
(Vote Limited to Pro Qual)
Chris Neal, Fire Protection Publications, OK [M]
Rep. TC on Fire Officer Pro Qual
(Vote Limited to Pro Qual)
David K. Nelson, David K. Nelson Consultants, CA [SE]
Rep. TC on Wildfire Suppression Pro Qual
(Vote Limited to Pro Qual)
William E. Peterson, Plano Fire Department, TX [M]
Rep. International Fire Service Training Association
Richard Powell, Saginaw Township Fire Department, MI [L]
Rep. TC on Accreditation & Certification Pro Qual
(Vote Limited to Pro Qual)
Jack R. Reed, Iowa Professional Fire Fighters, IA [L]
Rep. International Association of Fire Fighters
Philip C. Stittleburg, LaFarge Fire Department, WI [L]
Rep. National Volunteer Fire Council
Michael A. Wieder, Fire Protection Publications, OK [M]
Rep. TC on Incident Management Functional Positions Pro Qual
(Vote Limited to Pro Qual)
Johnny G. Wilson, Georgia Firefighter Standards & Training Council, GA [E]
Rep. National Board on Fire Service Professional Qualification

Alternate

Michael W. Robinson, Baltimore County Fire Department, MD [E]
(Alt. to J. G. Wilson)

Frank E. Florence, NFPA Staff Liaison

This list represents the membership at the time the Committee was balloted on the final text of this edition. Since that time, changes in the membership may have occurred. A key to classifications is found at the back of the document.

NOTE: Membership on a committee shall not in and of itself constitute an endorsement of the Association or any document developed by the committee on which the member serves.

Committee Scope: This Committee shall have primary responsibility for the management of the NFPA Professional Qualifications Project and documents related to professional qualifications for fire service, public safety, and related personnel.

Copyright National Fire Protection Association
Provided by IHS under license with NFPA
No reproduction or networking permitted without license from IHS
Not for Resale

Technical Committee on Fire Fighter Professional Qualifications

David T. Endicott, *Chair*
Endicott & Associates, MD [U]

Steve Willis, *Secretary*
MFTE/SMTC, ME [SE]
Rep. International Society of Fire Service Instructors

William Anderson, Carlsbad Fire Department, CA [L]
Jack Casner, The Great American Insurance Company, CT [I]
Michael P. Craig, Covington Fire Department, TN [U]
Yves Desjardins, Ecole nationale des pompiers du Quebec, Canada [U]
Collin J. DeWitt, Town of Gilbert Fire Department, AZ [U]
David R. Fischer, State Fire Marshal, NV [SE]
Craig S. Hall, U.S. Air Force, FL [E]
C. Gordon Henderson, City of Rome Fire Department, GA [E]
Rep. Georgia State Firefighter's Association, Inc.
Marcia S. Holtz, City of Madison Fire Department, WI [L]
Rep. Women in the Fire Service, Inc.
F. Patrick Marlatt, Maryland Fire and Rescue Institute, MD [SE]
Henry Morse, Fire Service Testing Company, Inc., FL [RT]
Mickey Pophin, Texas Commission on Fire Protection, TX [E]
Michael A. Wieder, Fire Protection Publications, OK [M]
Rep. International Fire Service Training Association
Michael L. Young, Volunteer Firemen's Insurance Services, Inc., PA [I]
Rep. Volunteer Firemen's Insurance Services, Inc.

Alternates

Scott L. Davidson, Volunteer Firemen's Insurance Services, Inc., PA [I]
(Alt. to M. L. Young)
Terese M. Floren, Women in the Fire Service, WI [L]
(Alt. to M. S. Holtz)
Ted J. Pagels, City of DePere, WI [SE]
(Alt. to S. Willis)
Thomas P. Ruane, Fire Protection Publications, OK [M]
(Alt. to M. A. Wieder)
Robert Singletary, City of Warner Robins Fire Department, GA [E]
(Alt. to C. G. Henderson)

Frank E. Florence, NFPA Staff Liaison

This list represents the membership at the time the Committee was balloted on the final text of this edition. Since that time, changes in the membership may have occurred. A key to classifications is found at the back of the document.

NOTE: Membership on a committee shall not in and of itself constitute an endorsement of the Association or any document developed by the committee on which the member serves.

Committee Scope: This Committee shall have primary responsibility for documents on professional competence required of fire fighters.

Copyright National Fire Protection Association
Provided by IHS under license with NFPA
No reproduction or networking permitted without license from IHS
Not for Resale

Contents

Chapter 1 Administration **1003–** 5
1.1 Scope **1003–** 5
1.2 Purpose **1003–** 5
1.3 Units **1003–** 5

Chapter 2 Referenced Publications **1003–** 5
2.1 General **1003–** 5
2.2 NFPA Publications **1003–** 5
2.3 Other Publications. (Reserved) **1003–** 5

Chapter 3 Definitions **1003–** 5
3.1 General **1003–** 5
3.2 NFPA Official Definitions **1003–** 5
3.3 General Definitions **1003–** 5

Chapter 4 General Requirements **1003–** 6
4.1 Certification **1003–** 6
4.2 Safety **1003–** 6
4.3 Job Performance Requirements **1003–** 6

Chapter 5 Entrance Requirements **1003–** 6
5.1 Entry Requirements **1003–** 6
5.2 Physical Fitness Requirements **1003–** 6

Chapter 6 Airport Fire Fighter **1003–** 6
6.1 General **1003–** 6
6.2 Response **1003–** 7
6.3 Fire Suppression **1003–** 7
6.4 Rescue **1003–** 9

Annex A Explanatory Material **1003–** 9

Annex B Aircraft Fire Suppression and Rescue Fire Training Mock-Up **1003–**11

Annex C Using Job Performance Requirements **1003–**16

Annex D Informational References **1003–**18

Index **1003–**20

Copyright National Fire Protection Association
Provided by IHS under license with NFPA
No reproduction or networking permitted without license from IHS
Not for Resale

NFPA 1003

Standard for

Airport Fire Fighter Professional Qualifications

2005 Edition

IMPORTANT NOTE: This NFPA document is made available for use subject to important notices and legal disclaimers. These notices and disclaimers appear in all publications containing this document and may be found under the heading "Important Notices and Disclaimers Concerning NFPA Documents." They can also be obtained on request from NFPA or viewed at www.nfpa.org/disclaimers.

NOTICE: An asterisk (*) following the number or letter designating a paragraph indicates that explanatory material on the paragraph can be found in Annex A.

A reference in brackets [ ] following a section or paragraph indicates material that has been extracted from another NFPA document. As an aid to the user, the complete title and edition of the source documents for mandatory extracts are given in Chapter 2 and those for nonmandatory extracts are given in Annex D. Editorial changes to extracted material consist of revising references to an appropriate division in this document or the inclusion of the document number with the division number when the reference is to the original document. Requests for interpretations or revisions of extracted text shall be sent to the technical committee responsible for the source document.

Information on referenced publications can be found in Chapter 2 and Annex D.

Chapter 1 Administration

1.1 Scope. This standard identifies the minimum job performance requirements for the airport fire fighter who is responsible for aircraft rescue and fire fighting.

1.2 Purpose.

1.2.1 The purpose of this standard is to specify the minimum job performance requirements for service as an airport fire fighter.

1.2.2 It is not the intent of this standard to restrict any jurisdiction from exceeding these minimum requirements.

1.3 Units.

1.3.1 In this standard, metric values for measurement are followed by an equivalent in U.S. units. Either set of values can be used, but the same set of values (either metric or U.S. units) shall be used throughout.

1.3.2 Conversion values for SI units and U.S. units are found in Table 1.3.2.

Table 1.3.2 Conversions

Quantity	SI Unit/ Symbol	U.S. Unit/ Symbol	Conversion Factor
Length	millimeter/mm	inch/in.	1 in. = 25.4 mm
	meter/m	foot/ft	1 ft = 0.305 m
Area	sq meter/m^2	sq foot/ft^2	1 ft^2 = 0.0929 m^2

Chapter 2 Referenced Publications

2.1 General. The documents or portions thereof listed in this chapter are referenced within this standard and shall be considered part of the requirements of this document.

2.2 NFPA Publications. National Fire Protection Association, 1 Batterymarch Park, Quincy, MA 02169-7471.

NFPA 472, *Standard for Professional Competence of Responders to Hazardous Materials Incidents,* 2002 edition.

NFPA 1001, *Standard for Fire Fighter Professional Qualifications,* 2002 edition.

NFPA 1500, *Standard on Fire Department Occupational Safety and Health Program,* 2002 edition.

NFPA 1582, *Standard on Comprehensive Occupational Medical Program for Fire Departments,* 2003 edition.

2.3 Other Publications. (Reserved)

Chapter 3 Definitions

3.1* General. The definitions contained in this chapter shall apply to the terms used in this standard. Where terms are not defined in this chapter or within another chapter, they shall be defined using their ordinarily accepted meanings within the context in which they are used. *Merriam-Webster's Collegiate Dictionary,* 11th edition, shall be the source for the ordinarily accepted meaning.

3.2 NFPA Official Definitions.

3.2.1* Approved. Acceptable to the authority having jurisdiction.

3.2.2* Authority Having Jurisdiction (AHJ). An organization, office, or individual responsible for enforcing the requirements of a code or standard, or for approving equipment, materials, an installation, or a procedure.

3.2.3 Shall. Indicates a mandatory requirement.

3.2.4 Standard. A document, the main text of which contains only mandatory provisions using the word "shall" to indicate requirements and which is in a form generally suitable for mandatory reference by another standard or code or for adoption into law. Nonmandatory provisions shall be located in an appendix or annex, footnote, or fine-print note and are not to be considered a part of the requirements of a standard.

3.3 General Definitions.

3.3.1 Aircraft Accident. An occurrence associated with the operation of an aircraft that takes place between the time any person boards the aircraft with the intention of flight and until all such persons have disembarked and in which any person suffers death or serious injury or in which the aircraft receives substantial damage. [**403,** 2003]

3.3.2 Aircraft Incident. An occurrence, other than an accident associated with the operation of an aircraft, that affects or could affect continued safe operation if not corrected. An incident does not result in serious injury to persons or substantial damage to aircraft. [**402,** 2002]

3.3.3 Airport Fire Fighter. The Fire Fighter II who has demonstrated the skills and knowledge necessary to function as an integral member of an aircraft rescue and fire-fighting (ARFF) team.

--`,,`````-`-`,,`,,`,`,,`---

Copyright National Fire Protection Association
Provided by IHS under license with NFPA
No reproduction or networking permitted without license from IHS
Not for Resale

3.3.4 Critical Rescue and Fire-Fighting Access Area. The rectangular area surrounding any runway within which most aircraft accidents can be expected to occur on airports. Its width extends 150 m (500 ft) from each side of the runway centerline, and its length is 1000 m (3300 ft) beyond each runway end. [**403,** 2003]

3.3.5 Dangerous Goods. Articles or substances that are capable of posing a significant risk to health, safety, or property when transported by air and that are classified and outlined in the International Air Transport Association (IATA) Dangerous Goods Manual/ Regulations.

3.3.6 Fire Department. An organization providing rescue, fire suppression, and related activities, including any public, governmental, private, industrial, or military organization engaging in this type of activity. [**1002,** 2003]

3.3.7* Hazardous Area. For an aircraft, the area inside 23 m (75 ft) from any external surface of the aircraft.

3.3.8 Job Performance Requirement (JPR). A statement that describes a specific job task, lists the items necessary to complete the task, and defines measurable or observable outcomes and evaluation areas for the specific task. [**1000,** 2000]

3.3.9* National Defense Area. An area established on nonfederal lands located in the United States, its territories, or its possessions for the purpose of safeguarding classified defense information or protecting Department of Defense (DOD) equipment, material, or both.

3.3.10 Practical Critical Fire Area (PCA). This area is two-thirds of the Theoretical Critical Fire Area (TCA). [**402,** 2002] *(See also 3.3.15, Theoretical Critical Fire Area.)*

3.3.11* Proximity Personal Protective Equipment (PrPPE). A protective ensemble consisting of approved proximity protective clothing, self-contained breathing apparatus (SCBA), and personal alert safety systems (PASS).

3.3.12 Requisite Knowledge. Fundamental knowledge one must have in order to perform a specific task. [**1031,** 2003]

3.3.13 Requisite Skills. The essential skills one must have in order to perform a specific task. [**1031,** 2003]

3.3.14 Task. A specific job behavior or activity. [**1002,** 2003]

3.3.15 Theoretical Critical Fire Area (TCA). The theoretical critical fire area (TCA) is a rectangle, the longitudinal dimension of which is the overall length of the aircraft, and the width includes the fuselage and extends beyond it by a predetermined set distance that is dependent on the overall width. Therefore, the aircraft length multiplied by the calculated width equals the size of the TCA. [**402,** 2002]

3.3.16 Zone. One of the sections of an area created for a particular purpose.

3.3.16.1* *Cold Zone.* The hazard-free area around an incident.

3.3.16.2* *Hot Zone.* The control zone immediately surrounding a hazardous materials incident that extends far enough to prevent adverse effects from hazardous materials releases to personnel outside the zone.

3.3.16.3* *Warm Zone.* The control zone at a hazardous materials incident site where personnel and equipment decontamination and hot zone support takes place.

Chapter 4 General Requirements

4.1* Certification. For certification as an airport fire fighter, the candidate shall meet the requirements for Fire Fighter II defined in NFPA 1001, *Standard for Fire Fighter Professional Qualifications*; first responder operational level defined in Chapter 5 of NFPA 472, *Standard for Professional Competence of Responders to Hazardous Materials Incidents*; and the requirements for airport fire fighter defined in this standard.

4.2 Safety.

4.2.1 Candidates shall safely complete job performance requirements in accordance with recognized practices and procedures.

4.2.2 Candidates also shall meet all applicable occupational safety and health requirements of the jurisdiction.

4.3 Job Performance Requirements.

4.3.1 Job performance requirements defined by this standard shall be evaluated by individuals approved by the authority having jurisdiction.

4.3.2 Job performance requirements shall not be required to be mastered in the order in which they appear.

4.3.3 The local, state/provincial, or federal training program shall establish the instructional priority and the training program content to prepare individuals to meet the job performance requirements of this standard.

4.3.4 Job performance requirements involving exposure to products of combustion outside of the aircraft rescue and firefighting (ARFF) vehicle shall be performed in PrPPE.

Chapter 5 Entrance Requirements

5.1 Entry Requirements. Prior to entering training to meet the requirements of Chapter 5, the candidate shall meet the following requirements:

(1) The minimum educational requirements established by the authority having jurisdiction
(2) The age requirements established by the authority having jurisdiction
(3) The medical requirements of NFPA 1582, *Standard on Comprehensive Occupational Medical Program for Fire Departments*

5.2 Physical Fitness Requirements.

5.2.1 Physical fitness requirements shall be developed and validated by the authority having jurisdiction.

5.2.2 Physical fitness requirements shall be in compliance with applicable equal opportunity regulations and other legal requirements.

Chapter 6 Airport Fire Fighter

6.1 General.

6.1.1 Qualifications. For qualification as an airport fire fighter, the candidate shall meet each of the job performance requirements defined in this chapter.

6.1.1.1 Duties. These requirements shall be divided into three major duties: response, fire suppression, and rescue.

Copyright National Fire Protection Association
Provided by IHS under license with NFPA
No reproduction or networking permitted without license from IHS
Not for Resale

6.1.1.2 Function. The primary function of the airport fire fighter shall be to execute fire suppression and rescue activities.

6.1.1.3* General Knowledge Requirements. Fundamental aircraft fire-fighting techniques, including the approach, positioning, initial attack, and selection, application, and management of the extinguishing agents; limitations of various sized hand lines; use of proximity protective personal equipment (PrPPE); fire behavior; fire-fighting techniques in oxygen-enriched atmospheres; reaction of aircraft materials to heat and flame; critical components and hazards of civil aircraft construction and systems related to ARFF operations; special hazards associated with military aircraft systems; a national defense area and limitations within that area; characteristics of different aircraft fuels; hazardous areas in and around aircraft; aircraft fueling systems (hydrant/vehicle); aircraft egress/ ingress (hatches, doors, and evacuation chutes); hazards associated with aircraft cargo, including dangerous goods; hazardous areas, including entry control points, crash scene perimeters, and requirements for operations within the hot, warm, and cold zones; and critical stress management policies and procedures.

6.1.1.4 General Skills Requirements. Don PrPPE; operate hatches, doors, and evacuation chutes; approach, position, and initially attack an aircraft fire; select, apply, and manage extinguishing agents; shut down aircraft systems, including engine, electrical, hydraulic, and fuel systems; operate aircraft extinguishing systems, including cargo area extinguishing systems.

6.1.2 The job performance requirements of this chapter shall be accomplished in accordance with the requirements of the authority having jurisdiction and NFPA 1500, *Standard on Fire Department Occupational Safety and Health Program.*

6.2 Response. This duty involves the timely arrival at an incident or accident and the capability to perform emergency functions. The duty also includes responding to hazardous conditions and performing standby operations.

6.2.1 Respond to day and night incidents or accidents on and adjacent to the airport, given an assignment, operating conditions, a location, a grid map, a vehicle, and a prescribed response time, so that the route selected and taken provides access to the site within the allotted time.

(A) Requisite Knowledge. Airport familiarization, including runway and taxiway designations, frangible gate locations, airport markings, lights, instrument landing system (ILS) critical areas, critical rescue and fire-fighting access areas, designated isolation areas, vehicular traffic controls on airfield, bridge load limits, controlled access points, aircraft traffic patterns and taxi routes, fuel storage and distribution locations, airport and immediate local area topographic layout, drainage systems, water supplies, and airport facilities.

(B) Requisite Skills. Read, interpret, and take correct action related to grid maps, water distribution maps, airport markings, and lights.

6.2.2 Communicate critical incident information regarding an incident or accident on or adjacent to an airport, given an assignment involving an incident or accident and an incident management system (IMS) protocol, so that the information provided is accurate and sufficient for the incident commander to initiate an attack plan.

(A) Requisite Knowledge. Incident management system (IMS) protocol, the airport emergency plan, airport and aircraft familiarization, and communications equipment and procedures.

(B) Requisite Skills. Operate communications systems, communicate an accurate situation report, implement incident management system (IMS) protocol and airport emergency plan, and recognize aircraft types.

6.2.3 Communicate with applicable air traffic control facilities, given a response destination on or adjacent to an airport and radio equipment, so that all required clearances are obtained.

(A) Requisite Knowledge. Communications equipment and frequencies, tower light signals, aviation phraseology, and phonetic alphabet.

(B) Requisite Skills. Operate communications equipment and use aviation phraseology and phonetic alphabet.

6.2.4* Perform an airport operation, given an assignment, a hazardous condition, and the airport policies and procedures, so that unsafe conditions are detected and reduced in accordance with the airport policies and procedures.

(A) Requisite Knowledge. Airport and aircraft policies and procedures for hazardous conditions.

(B) Requisite Skills. Recognize hazardous conditions and initiate corrective action.

6.3 Fire Suppression. This duty involves the attack, control, and extinguishment of fires involving aircraft, aircraft cargo, airport facilities, and other equipment related to airport operations and property conservation. The primary purpose of this duty is to protect lives and property.

6.3.1* Extinguish a 23.2 m^2 (250 ft^2) aircraft fuel spill fire, given PrPPE, a minimum of a 45 kg (100 lb) dry chemical fire extinguisher, and procedures, so that the agent is applied according to procedures and the fire is extinguished in 25 seconds.

(A) Requisite Knowledge. The fire behavior of aircraft fuels in spills and pools, physical properties, characteristics of aircraft fuel, agent application rates, densities, and procedures.

(B) Requisite Skills. Operate dry chemical extinguishers equipped with a hose line, including removing and operating hose and applying agent.

6.3.2* Extinguish an aircraft fuel spill fire, given PrPPE, an assignment, agent application procedures, an ARFF vehicle hand line flowing a minimum of 359 L/min (95 gpm) of AFFF extinguishing agent, and a fire sized to the flow rate used [AFFF flow rate divided by 4.92 L/min/m^2 for fire size in square meters (0.13 gpm/min/ft^2 for fire size in square feet)], so that the agent is applied using the prescribed techniques and the fire is extinguished in a time proportionate to, but no longer than, 90 seconds for a 73 m^2 (786 ft^2) fire with a flow rate at 359 L/min (95 gpm).

(A) Requisite Knowledge. The fire behavior of aircraft fuels in pools, physical properties and characteristics of aircraft fuel, and agent application rates and densities.

(B) Requisite Skills. Operate fire streams and apply agent.

6.3.3* Extinguish an aircraft fuel spill fire, given an assignment, PrPPE, an ARFF vehicle turret flowing a minimum of 946 L/min (250 gpm), a fire sized to the flow rate used [AFFF flow rate divided by 4.92 L/min/m^2 for fire size in

Copyright National Fire Protection Association
Provided by IHS under license with NFPA
No reproduction or networking permitted without license from IHS
Not for Resale

square meters (0.13 gpm/min/ft^2 for fire size in square feet)], and the procedures for agent application, so that the agent is applied according to procedures and the fire is extinguished in a time proportionate to, but no longer than, 90 seconds for 192 m^2 (1923 ft^2) fire with a flow rate at 946 L/min (250 gpm).

(A) Requisite Knowledge. Operation of ARFF vehicle agent delivery systems, the fire behavior of aircraft fuels in pools, physical properties and characteristics of aircraft fuel, the procedures for agent application, and agent application rates and densities.

(B) Requisite Skills. Apply fire-fighting agents and streams using ARFF vehicle turrets.

6.3.4* Extinguish a three-dimensional aircraft fuel fire as a member of a team, given a team, PrPPE, an assignment, ARFF vehicle hand line(s) using primary and secondary agents, and agent application procedures, so that a dual-agent attack is used, the agent is applied according to procedures, the fire is extinguished, and the fuel source is secured.

(A) Requisite Knowledge. The fire behavior of aircraft fuels in three-dimensional and atomized states, physical properties and characteristics of aircraft fuel, agent application rates and densities, agent application procedures, and methods of controlling fuel sources.

(B) Requisite Skills. Operate fire streams and apply agents, and secure fuel sources.

6.3.5* Attack a fire on the interior of an aircraft while operating as a member of a team, given a team, PrPPE, an assignment, an ARFF vehicle hand line, an extinguishing agent, and a ladder or other means of accessing the aircraft, so that team integrity is maintained, the attack line is deployed for advancement, ladders or other means are used, access is gained into the fire area, effective agent application practices are used, the fire is approached, attack techniques facilitate suppression given the level of the fire, hidden fires are located and controlled, hazards are avoided or managed, and the fire is brought under control.

(A) Requisite Knowledge. Techniques for accessing the aircraft interior according to the aircraft type, methods for advancing hand lines from an ARFF vehicle, precautions to be followed when advancing hose lines to a fire, observable results that a fire stream has been applied, dangerous structural conditions created by fire, principles of exposure protection, potential long-term consequences of exposure to products of combustion, physical states of matter in which fuels are found, common types of accidents or injuries and their causes, the role of the backup team in fire attack situations, attack and control techniques, and techniques for exposing hidden fires.

(B) Requisite Skills. Deploy ARFF hand line on an interior aircraft fire; gain access to aircraft interior; open, close, and adjust nozzle flow and patterns; apply agent using direct, indirect, and combination attacks; advance charged and uncharged hose lines up ladders and up and down interior and exterior stairways; and locate and suppress interior fires.

6.3.6* Attack an engine or auxiliary power unit/emergency power unit (APU/EPU) fire on an aircraft while operating as a member of a team, given PrPPE, an assignment, ARFF vehicle hand line or turret, a correct agent, and agent application procedures, so that agent application procedures are followed, the fire is extinguished, and the engine or APU/EPU is shut down.

(A) Requisite Knowledge. Techniques for accessing the aircraft engines and APU/EPUs, safety procedures, methods for advancing hand line from an ARFF vehicle, methods for operating turrets, and methods for shutting down engine and APU/EPU operation.

(B) Requisite Skills. Deploy and operate ARFF hand line, operate turrets, gain access to aircraft engine and APU/EPU, and shut down engine and APU.

6.3.7* Attack a wheel assembly fire, as a member of a team, given PrPPE, a team, an assignment, an ARFF vehicle hand line, and correct agent, so that the fire is extinguished.

(A) Requisite Knowledge. Agent selection and application procedure, special safety considerations, and the characteristics of combustible metals.

(B) Requisite Skills. Approach the fire in accordance with safety procedures, and select and apply agent.

6.3.8* Ventilate an aircraft through available doors and hatches while operating as a member of a team, given PrPPE, an assignment, tools, and mechanical ventilation devices, so that openings are created, all ventilation barriers are removed, and the heat and other products of combustion are released.

(A) Requisite Knowledge. Aircraft access points; principles, advantages, limitations, and effects of mechanical ventilation; the methods of heat transfer; the principles of thermal layering within an aircraft on fire; and the techniques and safety precautions for venting aircraft.

(B) Requisite Skills. Operate doors, hatches, and forcible entry tools; operate mechanical ventilation devices; and remove barriers.

6.3.9* Replenish extinguishing agents while operating as a member of a team, given an assignment, an ARFF vehicle, a fixed or mobile water source, a supply of agent, and supply lines and fittings, so that agents are available for application by the ARFF vehicle within the time established by the authority having jurisdiction (AHJ).

(A) Requisite Knowledge. Resupply procedures, operation procedures for ARFF vehicle replenishment, and pumps and transfer devices.

(B) Requisite Skills. Connect hose lines, operate valves, and operate pumps and transfer devices.

6.3.10 Preserve the aircraft accident scene, given an assignment and procedures, so that evidence is identified, protected, and reported according to procedures.

(A) Requisite Knowledge. Airport emergency plan requirements for preservation of the scene, evidence identification, evidence protection, and evidence reporting procedures.

(B) Requisite Skills. Preserve the scene for investigators, and identify, protect, and report evidence.

6.3.11 Overhaul the accident scene, given PrPPE, an assignment, hand lines, and property conservation equipment, so that all fires are located, exposed, and extinguished and all property is protected from further damage.

(A) Requisite Knowledge. Methods of complete extinguishment and prevention of re-ignition, reasons for conservation, operating procedures for property conservation equipment, overhaul procedures, signs of a hidden fire, methods of detecting hidden fires, and tools and equipment used for overhaul.

--`,,`-`-`,,`,,`,`,,`---

Copyright National Fire Protection Association
Provided by IHS under license with NFPA
No reproduction or networking permitted without license from IHS
Not for Resale

(B) Requisite Skills. Use property conservation equipment, detect hidden fires, and use tools and equipment to expose hidden fires.

6.4* Rescue. This duty involves gaining access to an aircraft and assisting in the evacuation process, performing disentanglement, and initial triage.

6.4.1* Gain access into and out of an aircraft through normal entry points and emergency hatches, shut down and safety the aircraft, and assist in the evacuation process while operating as a member of a team, given PrPPE and an assignment, so that passenger evacuation and rescue can be accomplished.

(A) Requisite Knowledge. Aircraft familiarization, including materials used in construction, aircraft terminology, automatic explosive devices, hazardous areas in and around aircraft, aircraft egress/ingress (hatches, doors, and evacuation chutes), military aircraft systems and associated hazards; capabilities and limitations of manual and power rescue tools and specialized high-reach devices, aircraft shutdown and safetying procedures.

(B) Requisite Skills. Operate power saws and cutting tools, hydraulic devices, pneumatic devices, and pulling devices; operate specialized ladders and high-reach devices; secure aircraft safety and shutdown.

6.4.2* Locate and disentangle an entrapped victim from an aircraft as a member of a team, given PrPPE, a team and an assignment, and rescue tools, so that the victim is freed from entrapment without undue further injury and hazards are managed.

(A) Requisite Knowledge. Capabilities and limitations of rescue tools, search procedures, hazard identification, and control methods.

(B) Requisite Skills. Perform search procedures, control hazards, remove victims, and operate rescue tools.

6.4.3 Implement initial triage of the victims of an aircraft accident, given PrPPE, an assignment, and the triage protocol of the AHJ, so that each victim is evaluated and correctly categorized according to protocol.

(A) Requisite Knowledge. Categories of triage according to the triage protocol of the AHJ, and methods of assessment.

(B) Requisite Skills. Assess the critical factors of patient condition, and label patient for triage category.

Annex A Explanatory Material

Annex A is not a part of the requirements of this NFPA document but is included for informational purposes only. This annex contains explanatory material, numbered to correspond with the applicable text paragraphs.

A.3.1 Definitions of action verbs used in the job performance requirements in this document are based on the first definition of the word found in *Merriam-Webster's Collegiate Dictionary,* 11th edition.

A.3.2.1 Approved. The National Fire Protection Association does not approve, inspect, or certify any installations, procedures, equipment, or materials; nor does it approve or evaluate testing laboratories. In determining the acceptability of installations, procedures, equipment, or materials, the authority having jurisdiction may base acceptance on compliance with NFPA or other appropriate standards. In the absence of such standards, said authority may require evidence of proper installation, procedure, or use. The authority having jurisdiction may also refer to the listings or labeling practices of an organization that is concerned with product evaluations and is thus in a position to determine compliance with appropriate standards for the current production of listed items.

A.3.2.2 Authority Having Jurisdiction (AHJ). The phrase "authority having jurisdiction," or its acronym AHJ, is used in NFPA documents in a broad manner, since jurisdictions and approval agencies vary, as do their responsibilities. Where public safety is primary, the authority having jurisdiction may be a federal, state, local, or other regional department or individual such as a fire chief; fire marshal; chief of a fire prevention bureau, labor department, or health department; building official; electrical inspector; or others having statutory authority. For insurance purposes, an insurance inspection department, rating bureau, or other insurance company representative may be the authority having jurisdiction. In many circumstances, the property owner or his or her designated agent assumes the role of the authority having jurisdiction; at government installations, the commanding officer or departmental official may be the authority having jurisdiction.

A.3.3.7 Hazardous Area. The hazardous area can be adjusted by the incident commander, based on site conditions and risk analysis.

A.3.3.9 National Defense Area. Establishment of a national defense area temporarily places such nonfederal lands under the effective control of the Department of Defense and results only from an emergency event. The senior DOD representative at the scene will define the boundary, mark it with a physical barrier, and post warning signs. The landlord's consent and cooperation will be obtained whenever possible; however, military necessity will dictate the final decision regarding location, shape, and size of the national defense area.

A.3.3.11 Proximity Personal Protective Equipment (PrPPE). For fire fighters, approved proximity protective clothing should meet NFPA 1976, *Standard on Protective Ensemble for Proximity Fire Fighting*, self-contained breathing apparatus (SCBA) meeting NFPA 1981, *Standard on Open-Circuit Self-Contained Breathing Apparatus for Fire and Emergency Services*, and personal alert safety systems (PASS) meeting NFPA 1982, *Standard on Personal Alert Safety Systems (PASS).*

A.3.3.16.1 Cold Zone. The purpose of the cold zone is to ensure that there is an easily recognized boundary for arriving fire fighters and support personnel so that they do not impinge on the hazardous area, where SCBA and PrPPE are required. The secondary purpose of the cold zone is a distance sufficient for an initial hand line to reach the entrance of the aircraft interior.

A.3.3.16.2 Hot Zone. The control zone immediately surrounding a hazardous materials incident, which extends far enough to prevent adverse effects from hazardous materials releases to personnel outside the zone. This zone is also referred to as the *exclusion zone* or the *restricted zone* in other documents.

A.3.3.16.3 Warm Zone. The warm zone includes control points for the decontamination corridor, thus helping to reduce the spread of contamination. This zone is also referred to as the *decontamination zone* or *limited access zone* in other documents.

Copyright National Fire Protection Association
Provided by IHS under license with NFPA
No reproduction or networking permitted without license from IHS
Not for Resale

A.4.1 Due to improvements in the design and construction of modern aircraft and the increased structural integrity that results, the potential exists for significant interior fires that cannot be extinguished using external aircraft fire-fighting tactics. Because extinguishing aircraft interior fires is an essential task of the airport fire fighter, the Fire Fighter II requirement in this document is primary. The basic fire-fighting skills and knowledge required for Fire Fighter II in NFPA 1001, *Standard for Fire Fighter Professional Qualifications*, are essential to the airport fire fighter.

A.6.1.1.3 Airport fire fighters should possess a knowledge of military aircraft at those airports that accept military aircraft or at those airports that are co-located with a military installation with either separate or shared runways. This knowledge should include the following:

(1) Military cargo/passenger aircraft
(2) Military tanker aircraft
(3) Military fighter/attack aircraft
(4) Military helicopter aircraft
(5) USAF Technical Order 00-105E-9 contains specific information concerning aircraft rescue and firefighting procedures and should be consulted prior to any attempt to perform rescue operations if trained military specialists are not available for immediate assistance. Copies of TO 00-105E-9 are available from HQ AFCESA/CEXF. This document contains specific information concerning fire-fighting and rescue operations for aircraft in the military inventory. It specifically addresses the following:
   (a) Entry. If the emergency controls are activated, an explosive charge will explosively separate the canopy from the aircraft.
   (b) Ejection Systems. All fighter, bomber, and attack aircraft are equipped with ejection seats. Once access has been gained to the cockpit, caution is extremely important, because these ejection seats, when activated, are propelled out of the aircraft by an explosive charge. Airport fire fighters should not touch or activate any controls.
   Note that if a canopy or hatch has been separated from an aircraft, the ejection seat is automatically armed. Extreme caution must be exercised in crew removal.
   (c) Extrication. The aircrew member is secured to the seat by a series of straps, harnesses, and restraint belts. These restraints can be released by cutting, if the release procedure is unknown.
   (d) Ordnance. Fighter and attack aircraft will have forward firing ordnance located in the forward part of the fuselage or wings.
   (e) Engine Shutdown. Engine shutdown usually can be accomplished by pulling T-handles, as on a commercial jet.

The *NFPA Aircraft Familiarization Charts Manual*, which contains complete diagrams of 115 types of aircraft, detailing their physical characteristics, is also helpful.

A.6.2.4 Hazardous conditions include special fuels, fueling operations (grounding and bonding), welding operations, hazardous materials operations, corrosion control, fuel cell maintenance, and military operations.

A.6.3.1 Concerns with the environmental impact of traditional flammable liquid training fires have caused many facilities to convert to propane-fueled simulators. The intent of this requirement is a safe and proper extinguishment technique for pool fires involving aircraft fuels. The use of pressurized flammable gas or flammable liquid is acceptable for this simulation.

A.6.3.2 The use of pressurized flammable gas or flammable liquid is acceptable for this simulation. Depending on the square footage of the local training simulators and the flow rate of the assigned application device, the specified time of extinguishment might need to be modified. When using simulators with lower square footage or different flow rates of agent application, the specified time of extinguishment will need to be proportional.

For example, a hand line flowing 359 L/min (95 gpm) would be required to extinguish a fire of 750 ft^2 in 90 seconds. The formula is 95 gpm/0.13 = 730 fire square footage for 69.7 m^2 (750 ft^2) fire with a flow rate at 359 L/min (95 gpm).

A.6.3.3 See A.6.3.2. For example, a candidate using a turret flowing 946 L/min (250 gpm) is required to extinguish a fire of 2067 ft^2 in 90 seconds for 192 m^2 (2067 ft^2) fire with a flow rate at 946 L/min (250 gpm).

A.6.3.4 Three-dimensional or running fuel fires involve a fuel leak from an elevated or pressurized source. The fuel burns as it falls through the air, and, once on the ground, the burning fuel can pool or run across the ground surface. These fuel fires are extremely difficult to extinguish. They must be recognized and action must be taken to extinguish them early in the incident or accident for successful fire-fighting operations. Typically, these fires cannot be extinguished by smothering agents such as AFFF, because these agents cannot seal the surface and exclude oxygen. Such fires are more successfully extinguished by shutting off the fuel flow or by using agents, such as dry chemicals, that interfere with the chemical or chain reaction.

A.6.3.5 This requirement can be met by using a structural burn facility that is configured to simulate the interior layout and dimensions of an aircraft fuselage and that contains mannequins to simulate victims. The mock-up should include at least three metal seats and training dummies to simulate victims. It is intended that the size of the aircraft be the largest type that normally uses the airport and that the hand line be appropriate to the size of the aircraft. For information on training mock-ups, see Annex B.

A.6.3.6 See Annex B for information on training mock-ups.

A.6.3.7 See Annex B for information on training mock-ups.

A.6.3.8 Training and evaluation of this task can be accomplished using actual aircraft or mock-ups and smoke-generation devices used for training.

A.6.3.9 The replenishment task is time critical. Evaluating the proficiency of potential ARFF personnel to replenish the extinguishing agents on an ARFF vehicle requires that the AHJ evaluate several factors related to its own airport emergency plan in order to establish a fair benchmark for personnel. The following factors influence this time constraint:

(1) Size of the ARFF vehicles' agent reservoirs
(2) Available replenishment methods and their agent flow capacities
(3) Proximity of replenishment means to the potential ARFF emergency locations in and around the airport

In making these evaluations, the AHJ must keep in mind that its overall objective is to assure an adequate agent flow at the scene during an emergency. The following is an example of determining the replenishment time variable:

Copyright National Fire Protection Association
Provided by IHS under license with NFPA
No reproduction or networking permitted without license from IHS
Not for Resale

If the typical ARFF vehicle on the airport runway holds 5677 L (1500 gal) of water and 568 L (150 gal) of AFFF, the replenishment means is a fixed water hydrant located at the midway point of the runways. If a hydrant flow capacity is 946 L/min (250 gpm) and if the average time to drive from the approach and departure end of any runway to the midpoint is 2 minutes, then a reasonable time to replenish a vehicle and return it to operation from the end of the runway is 18 minutes. This allows 2 minutes to drive to the hydrant, 4 minutes to connect to the hydrant, 7 minutes to fill the water tank, 3 minutes to disconnect from the hydrant, and 2 minutes to drive back to the end of the runway.

This might be considered a reasonable amount of time to replenish the vehicle at this particular airport, if additional vehicles are available to continue support at the emergency scene, but it might be entirely too slow for an airport where this ARFF vehicle is the only vehicle available to support an aircraft scene. In this case, the replenishment plan should be reevaluated and adjusted to reduce the time required.

A.6.4 One of the primary tasks of rescue operations is for the airport fire fighter to maintain a habitable environment around the fuselage and to assist with aircraft evacuation by stabilizing slide chutes and assisting and controlling the evacuees.

A.6.4.1 Training and evaluation of this task can be accomplished using actual aircraft or mock-ups. See Annex B.

A.6.4.2 Training and evaluation of this task can be accomplished using actual aircraft or mock-ups. See Annex B.

Annex B Aircraft Fire Suppression and Rescue Fire Training Mock-Up

This annex is not a part of the requirements of this NFPA document but is included for informational purposes only.

B.1 Pre-Incident Planning. Pre-incident planning directly affects a fire department's ability to provide quality resource protection. Fire fighters must be trained, competent, and certified to execute pre-incident plans. The live fire training program focuses on a fire fighter's ability to work as a team member during realistic and challenging training events.

B.2 Simulator Requirements. The following basic designs for an aircraft fire/rescue training simulator challenge fire fighters and result in increased protection for airports and airlines. Simulators can be constructed with low-cost materials that are usually available in maintenance yards or public works departments. Simulators can be equipped to use hydrocarbon fuels, such as Jet A, or clean-burning propane. Figure B.2(a) through Figure B.2(h) illustrate such a simulator. These mock-ups were developed for the users' information by U.S. Air Force HQ AFCESA/DEF, Tyndall AFB, FL.

(1) Running fuel fire *(see 6.3.4)*: This requirement is met by allowing a continuous, small stream of aircraft fuel to flow from the engine simulator into a catch basin. The fuel is ignited, resulting in a fire at the lead source. The fuel burns as it falls through the air and ignites the surface fire in the catch basin. *[See Figure B.2(b).]*

(2) Interior aircraft fire *(see 6.3.5)*: The fuselage and cabin section should be constructed of steel frames and heavy metal skin that will withstand heat and rapid cooldown. The simulator should be 9.14 m to 12.19 m (30 ft to 40 ft) in length to allow a realistic cabin fire-fighting exercise. The scenario includes burning Class A materials in the simulator to create the conditions expected with an interior aircraft fire. *[See Figure B.2(f) and Figure B.2(g).]*

(3) Auxiliary power unit (APU) fire *(see 6.3.6)*: The APU fire is created by burning fuel within a 15.24 cm (6 in.) steel pipe, suspended from the wing. This addition is a reasonable simulation of both the intake and exhaust ports. *[See Figure B.2(b).]*

(4) Wheel assembly fire *(see 6.3.7)*: Salvaged tire rims can be welded onto the number 2 wing support. Fuel can flow from above or through a pressurized device around the rims, or spray fuel on the rims can create a typical aircraft tire assembly fire. *[See Figure B.2(a) and Figure B.2(g).]*

(5) Ventilation of doors and hatches *(see 6.3.8)*: This design provides for both normal and emergency means of entry and egress. Normal entry is made through a hinged door, mounted forward of the wing. Emergency entrance is made through two over-wing openings and one aft door. All emergency openings are framed on the sides and bottom by angle iron. This procedure allows for sections of corrugated metal to be dropped into place and removed after use. An additional hatch has been added to the top of the fuselage to simulate military aircraft and provide for vertical ventilation. *[See Figure B.2(d) and Figure B.2(h).]*

(6) Access through normal and emergency hatches for rescue *(see 6.4.1)*: Compliance with this requirement can be met by using the openings discussed in 6.3.8.

(7) Passenger extraction and use of rescue equipment *(see 6.4.2)*: Access to simulated passengers is possible by using mechanical rescue equipment to force openings in the corrugated metal panels discussed in 6.3.8. These sections can be forced or cut with pneumatic cutting devices or power saws. These metal sections can be secured with pins to allow the realistic use of other hydraulic rescue equipment. *[See Figure B.2(e) and Figure B.2(f).]*

--`,,`,,`-`-`,,`,,`,`,,`---

Copyright National Fire Protection Association
Provided by IHS under license with NFPA
No reproduction or networking permitted without license from IHS
Not for Resale

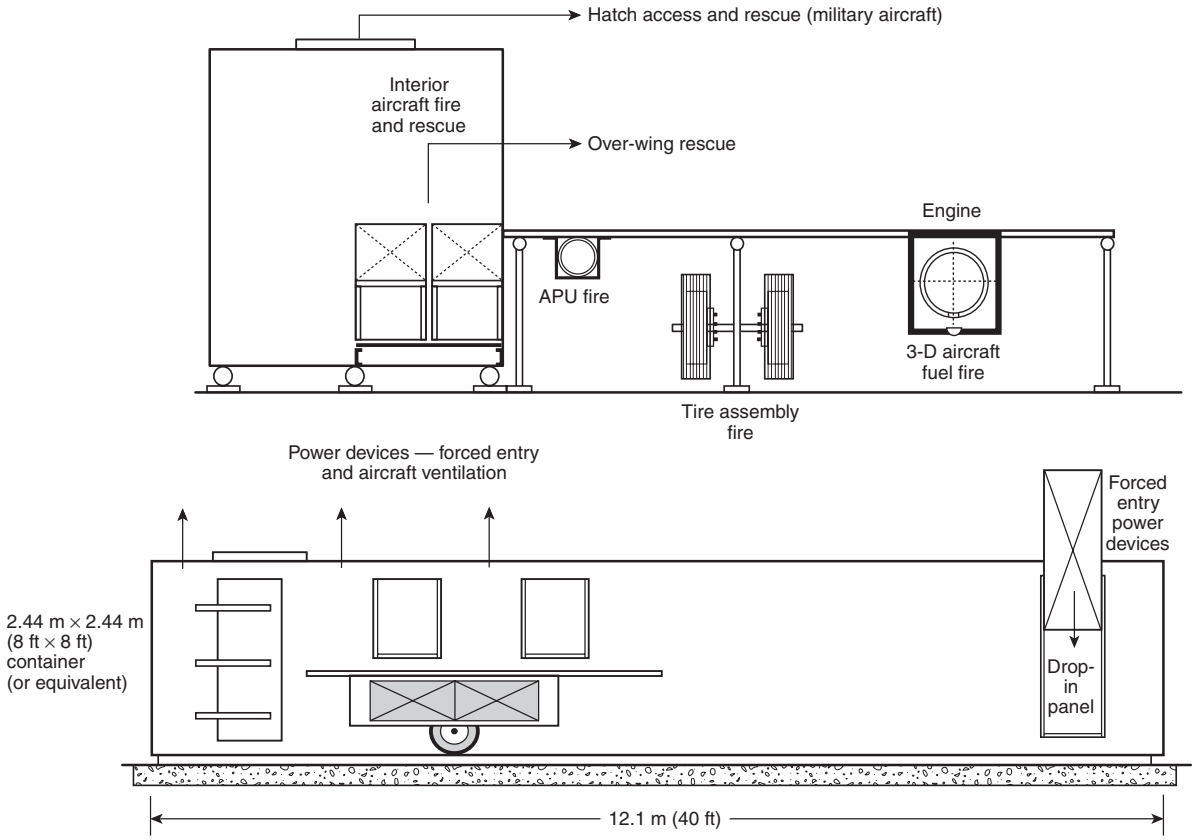

FIGURE B.2(a) Aircraft Fire Suppression and Rescue Live Fire Training Mock-Up.

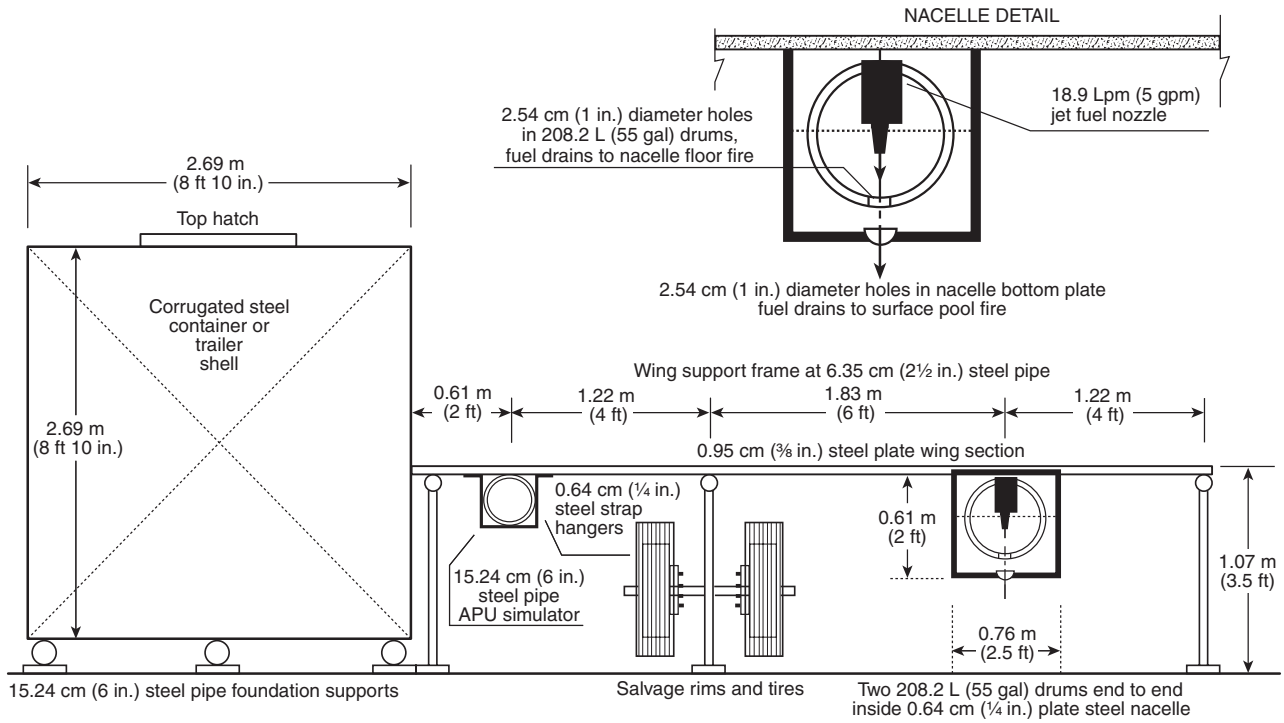

FIGURE B.2(b) Aircraft Fire Suppression and Rescue Live Fire Training Mock-Up (front view).

Copyright National Fire Protection Association
Provided by IHS under license with NFPA
No reproduction or networking permitted without license from IHS
Not for Resale

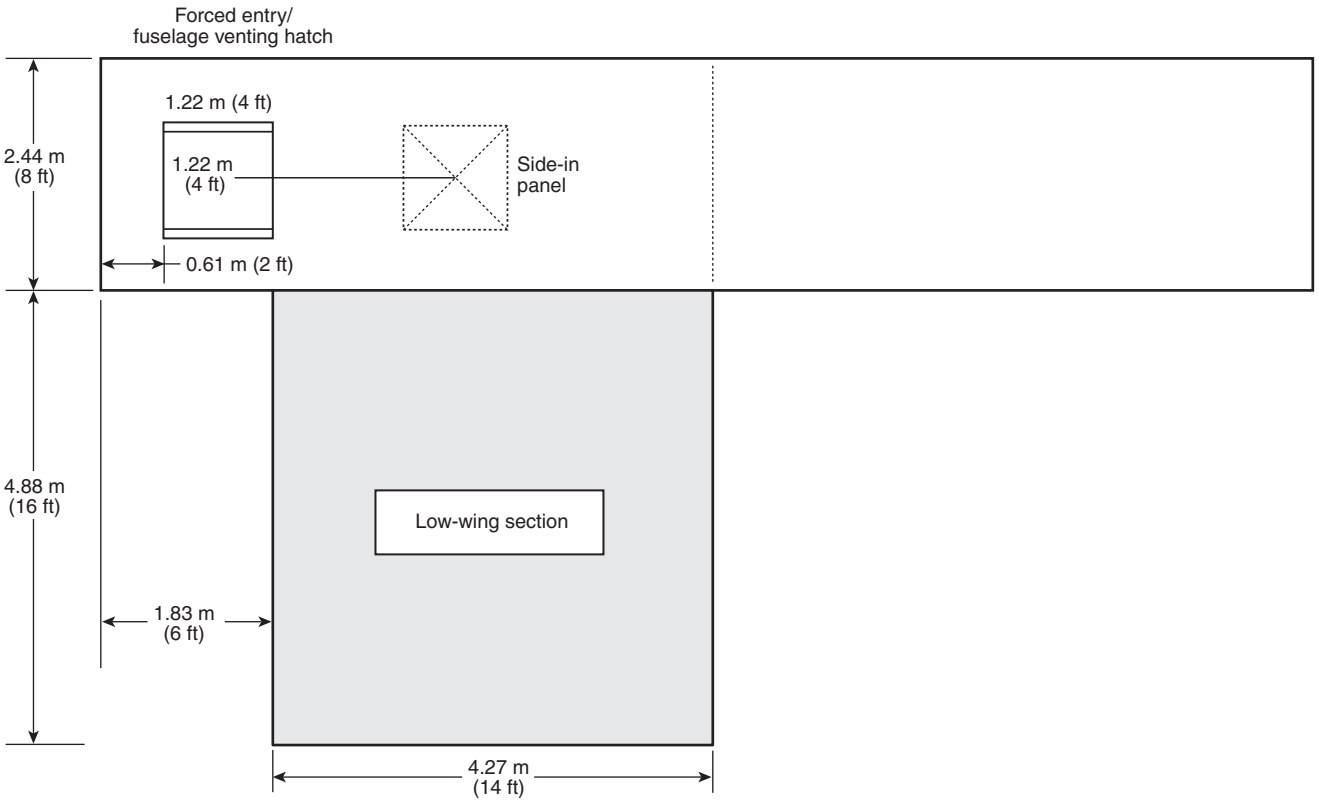

FIGURE B.2(c) Aircraft Fire Suppression and Rescue Live Fire Training Mock-Up (top view).

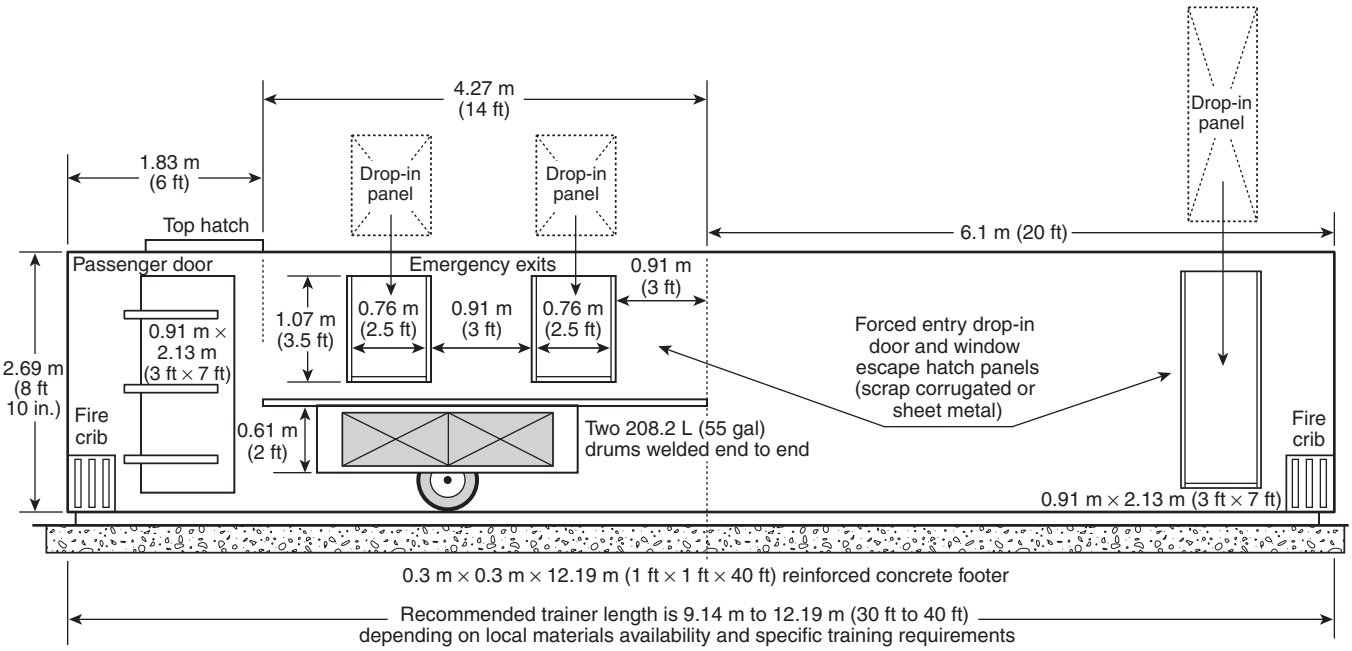

FIGURE B.2(d) Aircraft Fire Suppression and Rescue Live Fire Training Mock-Up (over-wing egress side view).

Copyright National Fire Protection Association
Provided by IHS under license with NFPA
No reproduction or networking permitted without license from IHS
Not for Resale

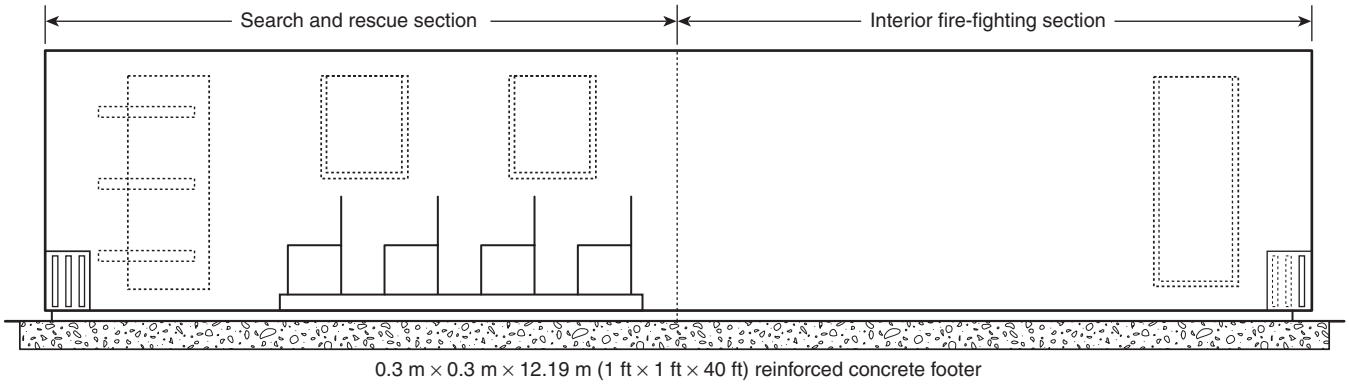

FIGURE B.2(e) Aircraft Fire Suppression and Rescue Live Fire Training Mock-Up (interior aircraft seat arrangement).

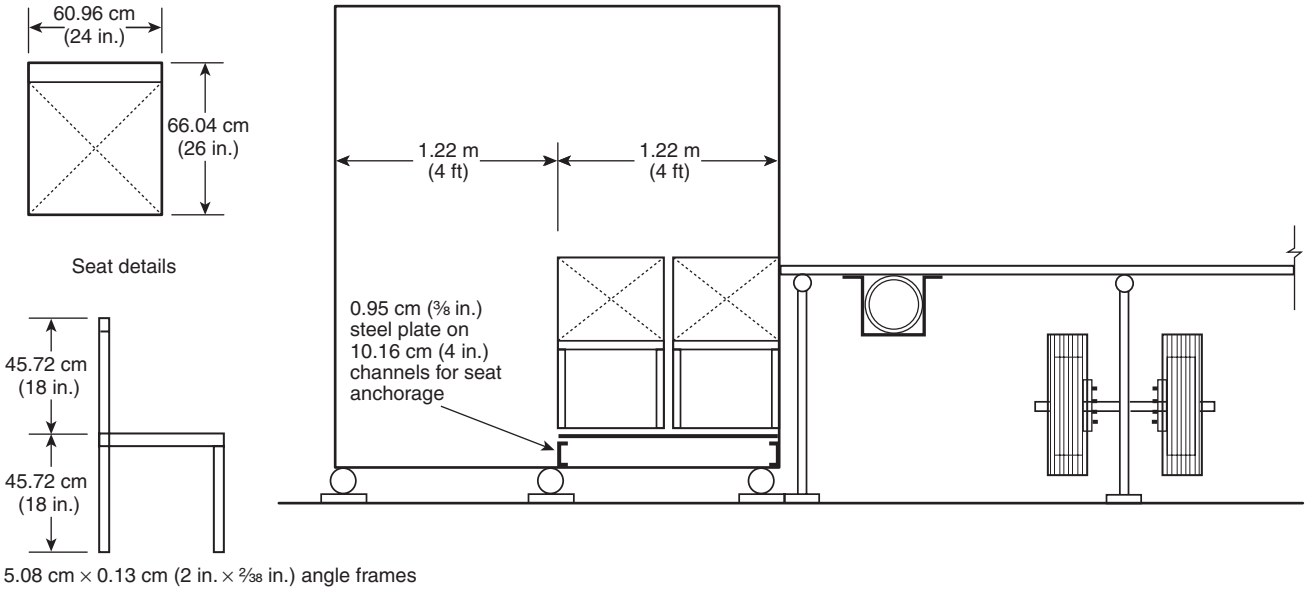

FIGURE B.2(f) Aircraft Fire Suppression and Rescue Live Fire Training Mock-Up (interior seating arrangement).

Copyright National Fire Protection Association
Provided by IHS under license with NFPA
No reproduction or networking permitted without license from IHS
Not for Resale

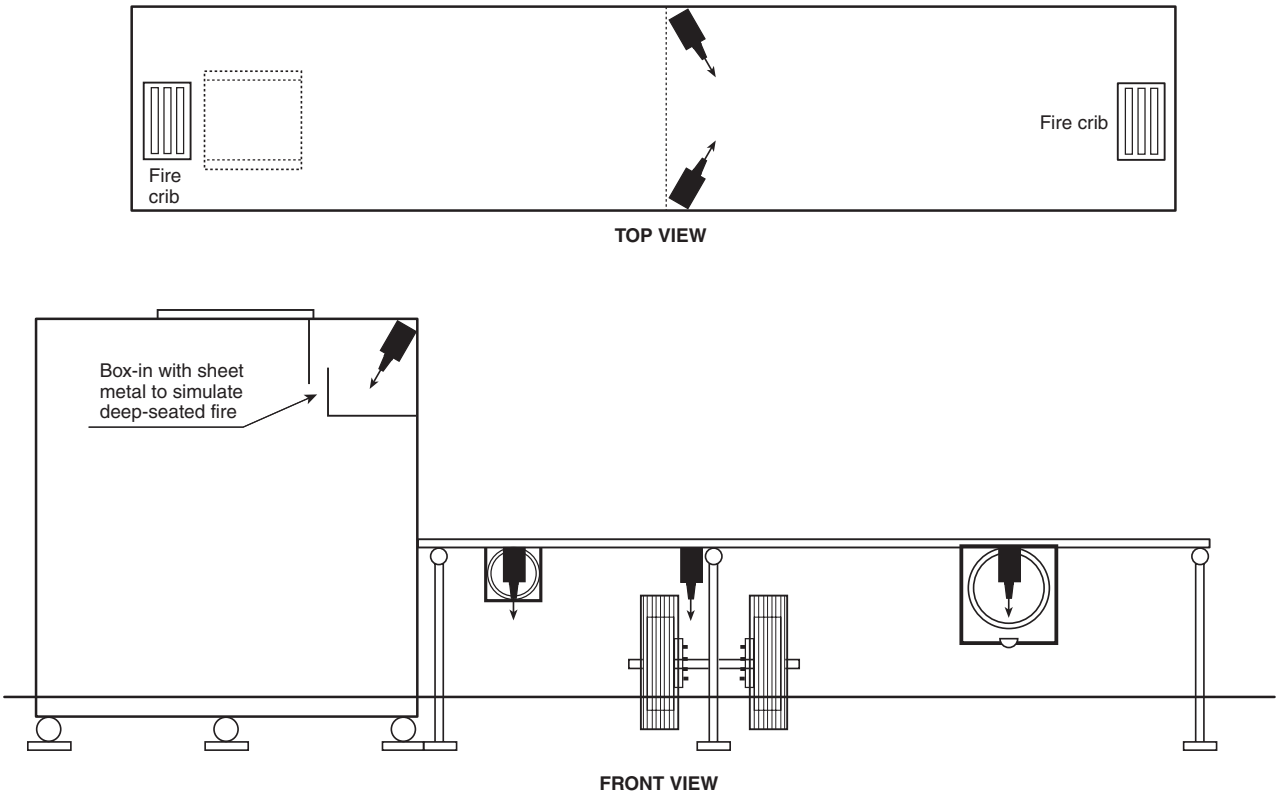

FIGURE B.2(g) Aircraft Fire Suppression and Rescue Live Fire Training Mock-Up [liquid propane or atomized jet fuel nozzle locations (no scale)].

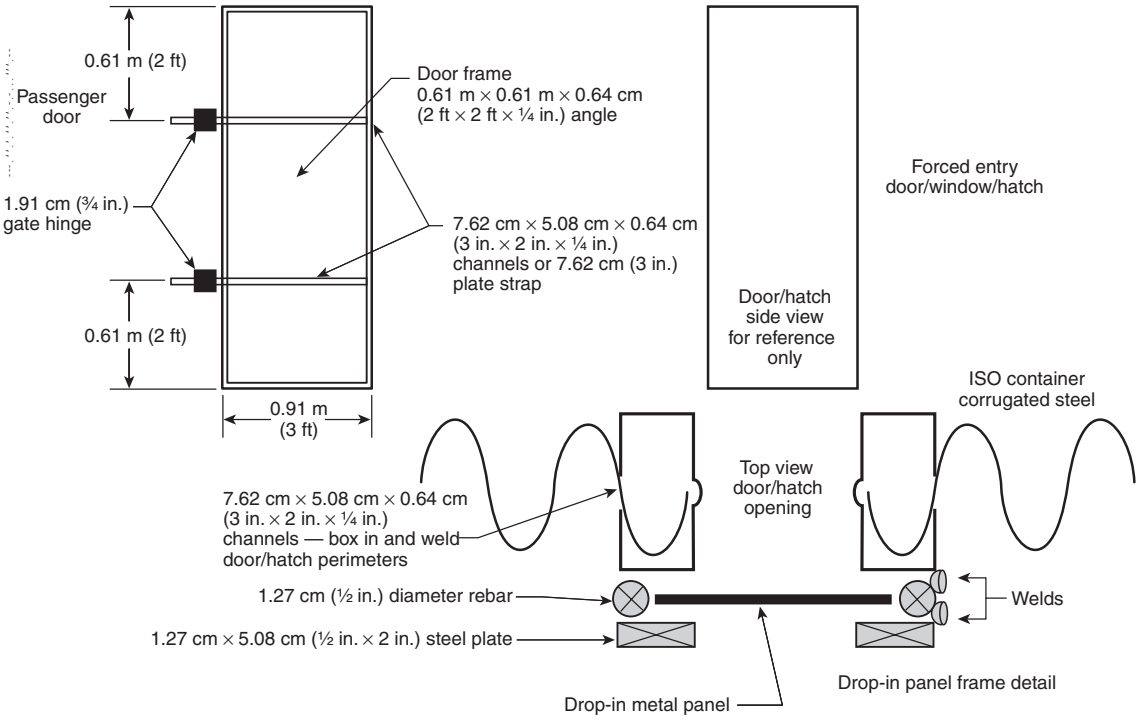

FIGURE B.2(h) Aircraft Fire Suppression and Rescue Live Fire Training Mock-Up (door and forced entry hatch details).

Copyright National Fire Protection Association
Provided by IHS under license with NFPA
No reproduction or networking permitted without license from IHS
Not for Resale

Annex C Using Job Performance Requirements

This annex is not a part of the requirements of this NFPA document but is included for informational purposes only.

C.1 Explanation of the Standards and Concepts of Job Performance Requirements (JPRs). The primary benefit of establishing national professional qualification standards is to provide the public and private sectors with a framework of the job requirements for the fire service. Other benefits include enhancement of the profession, individual as well as organizational growth and development, and standardization of practices.

NFPA professional qualification standards identify the minimum JPRs for specific fire service positions. The standards can be used for implementing training design and evaluation; certifying, measuring, and critiquing on-the-job performance; defining hiring practices; and setting organizational policies, procedures, and goals. (Other applications are encouraged.)

Professional qualification standards for a specific job are organized by major areas of responsibility defined as duties. For example, the fire fighter's duties might include fire suppression, rescue, and water supply; and the public fire educator's duties might include education, planning and development, and administration. Duties are major functional areas of responsibility within a job.

The professional qualification standards are written as JPRs. JPRs describe the performance required for a specific job. JPRs are grouped according to the duties of a job. The complete list of JPRs for each duty defines what an individual must be able to do in order to successfully perform that duty. Together, the duties and their JPRs define the job parameters; that is, the professional qualification standard as a whole is a job description.

C.2 Breaking Down the Components of a JPR. The JPR is the assembly of three critical components. *(See Table C.2.)* These components are as follows:

(1) Task that is to be performed
(2) Tools, equipment, or materials that must be provided to successfully complete the task
(3) Evaluation parameters and/or performance outcomes

Table C.2 Example of a JPR

(1) Task	(1) Ventilate a pitched roof
(2) Tools, equipment, or materials	(2) Given an ax, a pike pole, an extension ladder, and a roof ladder
(3) Evaluation parameters and performance outcomes	(3) So that a 1.22 m × 1.22 m (4 ft × 4 ft) hole is created; all ventilation barriers are removed; ladders are properly positioned for ventilation; ventilation holes are correctly placed; and smoke, heat, and combustion by-products are released from the structure

C.2.1 The Task to Be Performed. The first component is a concise statement of what the person is supposed to do.

C.2.2 Tools, Equipment, or Materials That Must Be Provided to Successfully Complete the Task. This component ensures that all individuals completing the task are given the same minimal tools, equipment, or materials when being evaluated. By listing these items, the performer and evaluator know what must be provided in order to complete the task.

C.2.3 Evaluation Parameters and/or Performance Outcomes. This component defines how well one must perform each task — for both the performer and evaluator. The JPR guides performance outcomes. This portion of the JPR promotes consistency in evaluation by reducing the variables used to gauge performance.

In addition to these three components, the JPR contains requisite knowledge and skills. Just as the term *requisite* suggests, they are the necessary knowledge and skills one must have prior to being able to perform the task. Requisite knowledge and skills are the foundation for task performance.

Once the components and requisites are put together, the JPR might read as follows.

C.2.3.1 Example 1. The Fire Fighter I shall ventilate a pitched roof, given an ax, a pike pole, an extension ladder, and a roof ladder, so that a 1.22 m × 1.22 m (4 ft × 4 ft) hole is created, all ventilation barriers are removed, ladders are properly positioned for ventilation, and ventilation holes are correctly placed.

(A) Requisite Knowledge. Pitched roof construction, safety considerations with roof ventilation, dangers associated with incorrect ventilation, knowledge of ventilation tools, effects of ventilation on fire growth, smoke movement in structures, signs of backdraft, and knowledge of vertical and forced ventilation.

(B) Requisite Skills. Remove roof covering; correctly initiate roof cuts; use the pike pole to clear ventilation barriers; use ax correctly for sounding, cutting, and stripping; position ladders; and climb and position self on ladder.

C.2.3.2 Example 2. The fire investigator shall interpret burn patterns, given standard equipment and tools and some structural/content remains, so that each individual pattern is evaluated with respect to the burning characteristics of the material involved.

(A) Requisite Knowledge. Fire development and the interrelationship of heat release rate, form, and ignitibility of materials.

(B) Requisite Skill. Interpret the effects of burning characteristics on different types of materials.

C.3 Examples of Potential Uses.

C.3.1 Certification. JPRs can be used to establish the evaluation criteria for certification at a specific job level. When used for certification, evaluation must be based on the successful completion of JPRs.

First, the evaluator would verify the attainment of requisite knowledge and skills prior to JPRs evaluation. Verification might be through documentation review or testing.

Copyright National Fire Protection Association
Provided by IHS under license with NFPA
No reproduction or networking permitted without license from IHS
Not for Resale

Next, the candidate would be evaluated on completing the JPRs. The candidate would perform the task and be evaluated based on the evaluation parameters, the performance outcomes, or both. This performance-based evaluation can be either practical (for psychomotor skills such as "ventilate a roof") or written (for cognitive skills such as "interpret burn patterns").

Note that psychomotor skills are those physical skills that can be demonstrated or observed. Cognitive skills (or mental skills) cannot be observed but are evaluated on how one completes the task (process oriented) or on the task outcome (product oriented).

Using Example 1 in C.2.3.1, a practical performance-based evaluation would measure the ability to "ventilate a pitched roof." The candidate passes this particular evaluation if the standard was met, that is, if a 1.22 m × 1.22 m (4 ft × 4 ft) hole was created; all ventilation barriers were removed; ladders were correctly positioned for ventilation; ventilation holes were correctly placed; and smoke, heat, and combustion byproducts were released from the structure.

For Example 2 in C.2.3.2, when evaluating the task "interpret burn patterns," the candidate might be given a written assessment in the form of a scenario, photographs, and drawings and then be asked to respond to specific written questions related to the JPR's evaluation parameters.

It is important to remember that when a candidate is being evaluated, he or she must be given the tools, equipment, or materials listed in the JPRs before he or she can be correctly evaluated: for example, an ax, a pike pole, an extension ladder, and a roof ladder.

C.4 Curriculum Development/Training Design and Evaluation. The statements contained in this document that refer to job performance were designed and written as JPRs. Although a resemblance to instructional objectives might be present, these statements should not be used in a teaching situation until after they have been modified for instructional use.

JPRs state the behaviors required to perform a specific skill(s) on the job, as opposed to a learning situation. These statements should be converted into instructional objectives with behaviors, conditions, and standards that can be measured within the teaching/learning environment. A JPR that requires a fire fighter to "ventilate a pitched roof" should be converted into a measurable instructional objective for use when teaching the skill. *[See Figure C.4(a).]*

Using Example 1 in C.2.3.1, a terminal instructional objective might read as follows:

The candidate will ventilate a pitched roof, given a simulated roof, an ax, a pike pole, an extension ladder, and a roof ladder, so that 100 percent accuracy is attained on a skills checklist. (At a minimum, the skills checklist should include each of the measurement criteria from the JPR.)

Although the differences between job performance requirements and instructional objectives are subtle in appearance, the purpose of each statement differs greatly. JPRs state what is necessary to perform the job in the "real world." Instructional objectives, however, are used to identify what students must do at the end of a training session and are stated in behavioral terms that are measurable in the training environment.

By converting JPRs into instructional objectives, instructors will be able to clarify performance expectations and avoid confusion related to using statements designed for purposes other than teaching. Additionally, instructors will be able to add local/state/regional elements of performance into the standards as intended by the developers.

Requisite skills and knowledge should be converted into enabling objectives. These objectives help to define the course content. The course content should include each of the requisite knowledge and skills. Using Figure C.4(b), the enabling objectives are pitched roof construction, safety considerations with roof ventilation, removal of roof covering, proper roof cuts, and so on. These objectives ensure that the course content supports the terminal objective.

Note that it is assumed that the reader is familiar with curriculum development or training design and evaluation.

C.5 Other Uses. While the professional qualifications standards are used principally to guide the development of training and certification programs, there are a number of other potential uses for these documents. Because they are written in JPR terms, they lend themselves well to any area of the profession where a level of performance or expertise must be determined. Such areas might include the following:

(1) Employee evaluation/performance critiquing: JPRs can be used as a guide by both the supervisor and the employee during an evaluation. The JPRs for a specific job define tasks that are essential to perform on the job, as well as the evaluation criteria to measure when those tasks are completed.

(2) Establishing hiring criteria: Professional qualifications standards can be used in a number of ways to further the establishment of hiring criteria. The authority having jurisdiction could simply require certification at a specific job level, for example, Fire Fighter I. The JPRs could also be used as the basis for pre-employment screening by establishing essential minimal tasks and the related evaluation criteria. An added benefit is that individuals interested in employment can work toward the minimal hiring criteria at local colleges.

(3) Employee development: The professional qualifications standards can be useful to both the employee and the employer in developing a plan for the individual's growth within the organization. The JPRs and the associated requisite skills and knowledge can be used as a guide to determine additional training and education required for the employee to master the job or profession.

(4) Succession planning: Succession planning, or career pathing, addresses the efficient placement of people into jobs in response to current needs and anticipated future needs. A career development path can be established for targeted individuals to prepare them for growth within the organization. The JPRs and requisite knowledge and skills could then be used to develop an educational path to aid in the individual's advancement within the organization or profession.

(5) Establishing organizational policies, procedures, and goals: The JPRs can be incorporated into organizational policies, procedures, and goals where employee performance is addressed.

C.6 Bibliography. See D.2 for a bibliography for Annex C.

Copyright National Fire Protection Association
Provided by IHS under license with NFPA
No reproduction or networking permitted without license from IHS
Not for Resale

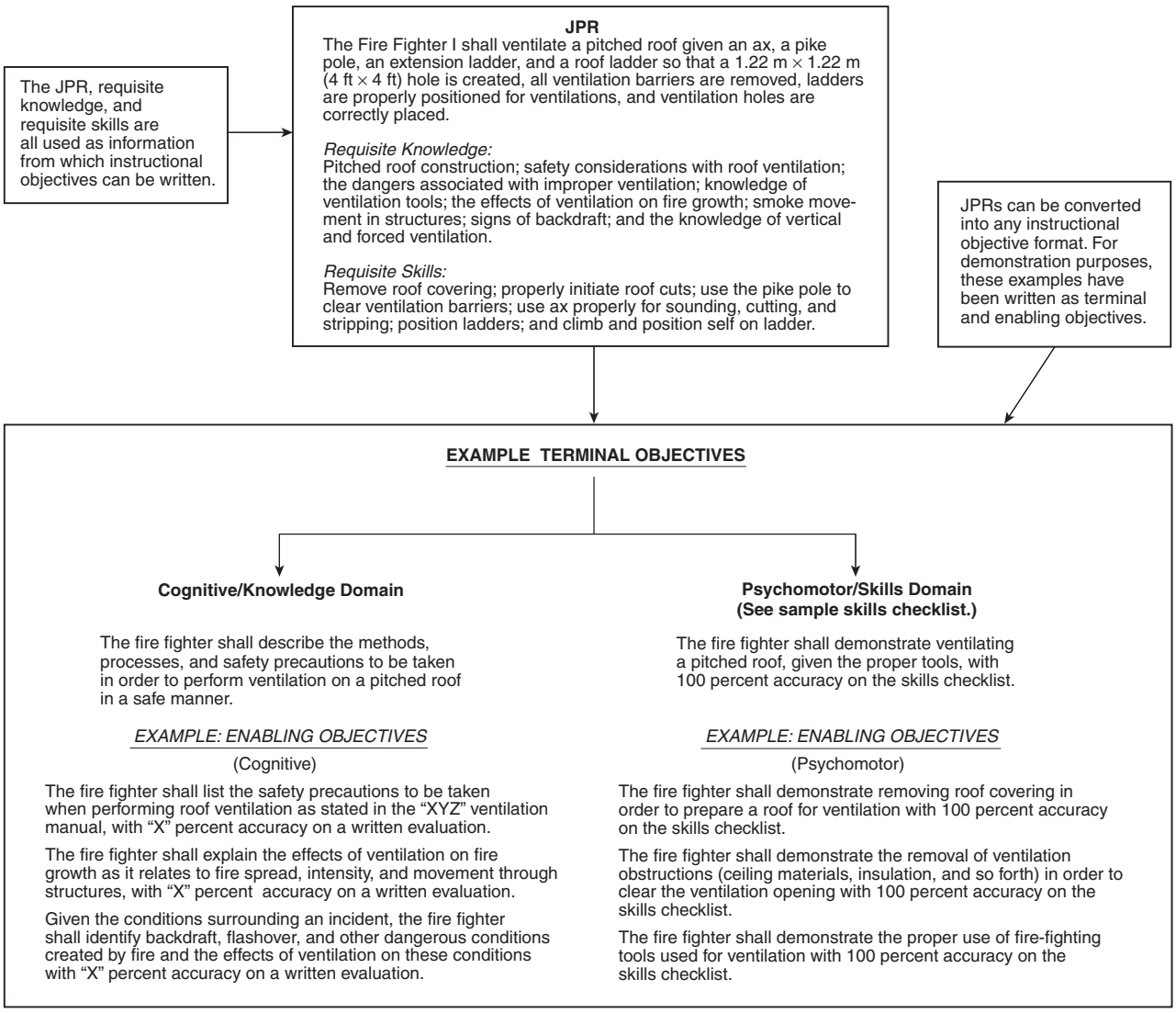

FIGURE C.4(a) Converting JPRs into Instructional Objectives.

OBJECTIVE: The fire fighter shall demonstrate ventilating a pitched roof, given the proper tools, within 5 minutes and with 100 percent accuracy on the skills checklist.

YES	NO	
❑	❑	1. 1.22 m × 1.22 m (4 ft × 4 ft) hole was created.
❑	❑	2. All ventilation barriers were removed.
❑	❑	3. Ladders were properly positioned.
❑	❑	4. Ventilation holes were correctly placed (directly over fire, at highest point, and so forth)
❑	❑	5. The task completed within 5 minutes. (Time to complete task: _____.)

FIGURE C.4(b) Sample Skills Checklist (roof ventilation).

Annex D Informational References

D.1 Referenced Publications. The following documents or portions thereof are referenced within this standard for informational purposes only and are thus not part of the requirements of this document unless also listed in Chapter 2.

D.1.1 NFPA Publications. National Fire Protection Association, 1 Batterymarch Park, Quincy, MA 02169-7471.

NFPA 1001, *Standard for Fire Fighter Professional Qualifications*, 2002 edition.

NFPA 1976, *Standard on Protective Ensemble for Proximity Fire Fighting*, 2000 edition.

NFPA 1981, *Standard on Open-Circuit Self-Contained Breathing Apparatus for Fire and Emergency Services*, 2002 edition.

NFPA 1982, *Standard on Personal Alert Safety Systems (PASS)*, 1998 edition.

NFPA *Aircraft Familiarization Charts Manual*, 1999.

Copyright National Fire Protection Association
Provided by IHS under license with NFPA
No reproduction or networking permitted without license from IHS
Not for Resale

D.1.2 IATA Publication. International Air Transport Association, IATA Building, 2000 Peel Street, Montreal, Canada H3A 2R4.

Dangerous Goods Manual/Regulations, 1996.

D.1.3 Other Publications.

Merriam-Webster's Collegiate Dictionary, 11th edition, Merriam-Webster, Inc., Springfield, MA, 2003.

USAF Technical Order 00-105E-9, HQ AFCESA/CEXF, 139 Barnes Drive, Suite 1, Tyndall AFB, FL 32403-5319.

D.2 Informational References. The following documents or portions thereof are listed here as informational resources only. They are not a part of the requirements of this document.

Boyatzis, R. E. (1982). *The Competent Manager: A Model for Effective Performance.* New York: John Wiley & Sons.

Castle, D. K. (1989). "Management Design: A Competency Approach to Create Exemplar Performers." *Performance and Instruction*, 28, pp. 42–48.

Cetron, M., and O'Toole, T. (1983). *Encounters with the Future: A Forecast into the 21st Century.* New York: McGraw Hill.

Elkin, G. (1990). "Competency-Based Human Resource Development: Making Sense of the Ideas." *Industrial and Commercial Training*, 22, pp. 20–25.

Furnham, A. (1990). "The Question of Competency." Personnel Management, 22, p. 37.

Gilley, J. W., and Eggland, S. A. (1989). *Principles of Human Resource Development.* Reading, MA: Addison-Wesley.

Hooton, J. (1990). *Job Performance = Tasks + Competency × Future Forces.* Unpublished manuscript, Vanderbilt University, Peabody College, Nashville, TN.

McLagan, P. A. (1989). "Models for HRD Practice." *Training and Development Journal*, reprinted.

McLagan, P. A. and Suhadolnik, D. (1989). *The Research Report.* Alexandria, VA: American Society for Training and Development.

Nadler, L. (1983). "HRD on the Spaceship Earth." *Training and Development Journal*,October, pp. 19–22.

Nadler, L. (1984). *The Handbook of Human Resource Development.* New York: Wiley-Interscience.

Naisbitt, J. (speaker) (1984). *Megatrends* (cassette recording No. 210). Chicago: Nightingale-Conant.

Spellman, B. P. (1987). "Future Competencies of the Educational Public Relations Specialist" (doctoral dissertation, University of Houston, 1987). *Dissertation Abstracts International*, 49, 02A.

Springer, J. (1980). *Job Performance Standards and Measures.* A series of research presentations and discussions for the ASTD Second Annual Invitational Research Seminar, Savannah, GA (November 5–8, 1979). Madison, WI: American Society for Training and Development.

Tracey, W. R. (1984). *Designing Training and Development Systems.* New York: AMACOM.

D.3 References for Extracts. The following documents are listed here to provide reference information, including title and edition, for extracts given throughout the nonmandatory sections of this standard as indicated by a reference in brackets [ ] following a section or paragraph. These documents are not a part of the requirements of this document unless also listed in Chapter 2 for other reasons.

NFPA 402, *Guide for Aircraft Rescue and Fire Fighting Operations*, 2002 edition.

NFPA 403, *Standard for Aircraft Rescue and Fire-Fighting Services at Airports*, 2003 edition.

NFPA 1000, *Standard for Fire Service Professional Qualifications Accreditation and Certification Systems*, 2000 edition.

NFPA 1002, *Standard for Fire Apparatus Driver/Operator Professional Qualifications*, 2003 edition.

NFPA 1031, *Standard for Professional Qualifications for Fire Inspector and Plan Examiner*, 2003 edition.

Copyright National Fire Protection Association
Provided by IHS under license with NFPA
No reproduction or networking permitted without license from IHS
Not for Resale

Index

© 2005 National Fire Protection Association. All Rights Reserved.

The copyright in this index is separate and distinct from the copyright in the document that it indexes. The licensing provisions set forth for the document are not applicable to this index. This index may not be reproduced in whole or in part by any means without the express written permission of NFPA.

-A-

Access
- To aircraft ..... 6.4.1, A.6.4.1, B.2(6)
- To incident 6.2.1

Age requirements ..... 5.1(2)

Aircraft
- Access to ..... 6.4.1, A.6.4.1, B.2(6)
- Military 6.1.1.3, A.6.1.1.3
- Training mock-up ..... Annex B
- Ventilation of 6.3.8, A.6.3.8

Aircraft accident (definition) 3.3.1

Aircraft fires
- Auxiliary power unit (APU) fires ..... 6.3.6, A.6.3.6, B.2(3)
- Engine fires 6.3.6, A.6.3.6
- Fuel fires ..... *see* Fuel fires
- Interior ..... *see* Interior aircraft fires
- Wheel assembly fires ..... 6.3.7, A.6.3.7, B.2(4)

Aircraft incident (definition) 3.3.2

Aircraft rescue and fire fighting (ARFF) vehicles
- Hand lines ..... 6.3.2, 6.3.4 to 6.3.7, 6.3.11, A.6.3.2, A.6.3.4 to A.6.3.7
- Replenishment of extinguishing agents for 6.3.9, A.6.3.9
- Turrets 6.3.3, 6.3.6, A.6.3.3, A.6.3.6

Airport, familiarization with ..... 6.2.1(A)

Airport fire fighter (definition) 3.3.3

Approved (definition) 3.2.1, A.3.2.1

APU fires ..... *see* Auxiliary power unit (APU) fires

Authority having jurisdiction (definition) 3.2.2

Auxiliary power unit (APU) fires ..... 6.3.6, A.6.3.6, B.2(3)

-C-

Certification requirements 4.1, A.4.1

Communication skills 6.2.2, 6.2.3

Critical rescue and fire-fighting access area (definition) 3.3.4

-D-

Dangerous goods (definition) 3.3.5

Definitions ..... Chap. 3

Dry chemical extinguishers 6.3.1, A.6.3.1

-E-

Educational requirements ..... 5.1(1)

Entrance requirements ..... Chap. 5

Evacuation 6.4.1, A.6.4.1

Evaluation 4.3.1, C.4

Extinguishing agents ..... 6.3.1 to 6.3.7, 6.3.9, A.6.3.1 to A.6.3.7, A.6.3.9

-F-

Fire department (definition) 3.3.6

Fire suppression
- Requirements 6.3
- Training mock-up ..... Annex B

Fuel fires ..... 6.3.1 to 6.3.4, A.6.3.2 to A.6.3.4
- Three-dimensional or running fuel fire ..... 6.3.4, A.6.3.4, B.2(1)

-H-

Hatches, access through ..... 6.4.1, A.6.4.1, B.2(6)

Hazardous area ..... 6.4.1(A)
- Definition 3.3.7, A.3.3.7

Hazardous conditions 6.2.4, A.6.2.4

-I-

Interior aircraft fires ..... 6.3.5, A.4.1, A.6.3.5, B.2(2)

-J-

Job performance requirements (JPRs) ..... 4.3, Chap. 6, Annex C
- Components C.2
- Concept of C.1
- Curriculum development/training design C.4
- Definition 3.3.8
- Evaluation of 4.3.1, C.4
- Fire suppression ..... 6.3, A.6.3.1 to A.6.3.9
- General 6.1, A.6.1.1.3
- Instructional priority 4.3.2
- Potential uses, examples of C.3, C.5
- Rescue 6.4, A.6.4
- Response 6.2, A.6.2.4

-M-

Measurement, units of 1.3

Medical requirements ..... 5.1(3)

Military aircraft ..... 6.1.1.3, 6.4.1(A), A.6.1.1.3

-N-

National defense area (definition) 3.3.9, A.3.3.9

-P-

Passenger extraction ..... 6.4.2, A.6.4.2, B.2(7)

Physical fitness requirements 5.2

Practical critical fire area (PCA) (definition) 3.3.10

Proximity personal protective equipment (PrPPe) ..... 4.3.4, 6.1.1.3, 6.1.1.4, 6.3.1 to 6.3.8, 6.3.11, 6.4.1 to 6.4.3
- Definition 3.3.11, A.3.3.11

Purpose of standard 1.2

-R-

References ..... Chap. 2, Annex D

Requisite knowledge 6.1.1.3
- Definition 3.3.12

Requisite skills 6.1.1.4
- Definition 3.3.13

Rescue equipment and tools ..... 6.4.2, A.6.4.2, B.2(7)

Rescue operations
- Requirements 6.4, A.6.4
- Training mock-up ..... Annex B

Response requirements 6.2, A.6.2.4

Running fuel fires ..... 6.3.4, A.6.3.4, B.2(1)

-S-

Safety issues 4.2, 4.3.4

Scope of standard 1.1

Shall (definition) 3.2.3

Standard (definition) 3.2.4

--`,,```-`-`,,`,,`,`,,`---

Copyright National Fire Protection Association
Provided by IHS under license with NFPA
No reproduction or networking permitted without license from IHS

Not for Resale

-T-

Task (definition) 3.3.14
Theoretical critical fire area (TCA) (definition) 3.3.15
Three-dimensional fires ..... 6.3.4, A.6.3.4, B.2(1)
Training 4.3.3
Entrance requirements ..... Chap. 5
Mock-ups for ..... Annex B
Triage 6.4.3

-U-

Units of measurement 1.3

-V-

Ventilation of aircraft ..... 6.3.8, A.6.3.8, B.2(5)

-W-

Water source, fixed or mobile 6.3.9, A.6.3.9
Wheel assembly fire ..... 6.3.7, A.6.3.7, B.2(4)

-Z-

Zone
Cold (definition) 3.3.16.1, A.3.3.16.1
Definition 3.3.16
Hot (definition) 3.3.16.2, A.3.3.16.2
Warm (definition) 3.3.16.3, A.3.3.16.3

Copyright National Fire Protection Association
Provided by IHS under license with NFPA
No reproduction or networking permitted without license from IHS
Not for Resale

Sequence of Events Leading to Publication of an NFPA Committee Document

Call goes out for proposals to amend existing document or for recommendations on new document.

▼

Committee meets to act on proposals, to develop its own proposals, and to prepare its report.

▼

Committee votes on proposals by letter ballot. If two-thirds approve, report goes forward. Lacking two-thirds approval, report returns to committee.

▼

Report — *Report on Proposals* (ROP) — is published for public review and comment.

▼

Committee meets to act on each public comment received.

▼

Committee votes on comments by letter ballot. If two-thirds approve, supplementary report goes forward. Lacking two-thirds approval, supplementary report returns to committee.

▼

Supplementary report — *Report on Comments* (ROC) — is published for public review.

▼

NFPA membership meets (Annual or Fall Meeting) and acts on committee report (ROP or ROC).

▼

Committee votes on any amendments to report approved at NFPA Annual or Fall Meeting.

▼

Appeals to Standards Council on Association action must be filed within 20 days of the NFPA Annual or Fall Meeting.

▼

Standards Council decides, based on all evidence, whether or not to issue standard or to take other action, including upholding any appeals.

Committee Membership Classifications

The following classifications apply to Technical Committee members and represent their principal interest in the activity of the committee.

M *Manufacturer:* A representative of a maker or marketer of a product, assembly, or system, or portion thereof, that is affected by the standard.

U *User:* A representative of an entity that is subject to the provisions of the standard or that voluntarily uses the standard.

I/M *Installer/Maintainer:* A representative of an entity that is in the business of installing or maintaining a product, assembly, or system affected by the standard.

L *Labor:* A labor representative or employee concerned with safety in the workplace.

R/T *Applied Research/Testing Laboratory:* A representative of an independent testing laboratory or independent applied research organization that promulgates and/or enforces standards.

E *Enforcing Authority:* A representative of an agency or an organization that promulgates and/or enforces standards.

I *Insurance:* A representative of an insurance company, broker, agent, bureau, or inspection agency.

C *Consumer:* A person who is, or represents, the ultimate purchaser of a product, system, or service affected by the standard, but who is not included in the *User* classification.

SE *Special Expert:* A person not representing any of the previous classifications, but who has a special expertise in the scope of the standard or portion thereof.

NOTES:

1. "Standard" connotes code, standard, recommended practice, or guide.
2. A representative includes an employee.
3. While these classifications will be used by the Standards Council to achieve a balance for Technical Committees, the Standards Council may determine that new classifications of members or unique interests need representation in order to foster the best possible committee deliberations on any project. In this connection, the Standards Council may make such appointments as it seems appropriate in the public interest, such as the classification of "Utilities" in the National Electrical Code Committee.
4. Representatives of subsidiaries of any group are generally considered to have the same classification as the parent organization.

--`,,`````-`-`,,`,,`,`,,`---

Copyright National Fire Protection Association
Provided by IHS under license with NFPA
No reproduction or networking permitted without license from IHS

Not for Resale

NFPA Technical Committee Document Proposal Form

Note: All proposals must be received by 5:00 p.m. EST/EDST on the published proposal closing date.

For further information on the standards-making process, please contact Codes and Standards Administration at 617-984-7249. For technical assistance, please call NFPA at 617-770-3000.

FOR OFFICE USE ONLY
Log #: _____
Date Rec'd: _____

Please indicate in which format you wish to receive your ROP/ROC: ☐ **CD ROM** ☐ **paper** ☐ **download**
(Note: In choosing the download option you intend to view the ROP/ROC from our Website. No copy will be sent to you.)

Date 12/18/02 **Name** John B. Smith **Telephone** 617-555-1212
Company _____
Address 9 Seattle St. **City** Seattle **State** WA **Zip** 02255
Please indicate organization represented (if any) Fire Marshals Assn. of North America

1. **a) NFPA Document Title** National Fire Alarm Code
   b) NFPA No. & Edition NFPA 72, 2002 ed. **c) Section/Paragraph** 4.4.7.1.1

2. **Proposal Recommends:** *(check one)* ☐ **new text** ☐ **revised text** ☒ **deleted text**

3. **Proposal.** *(Include proposed new or revised wording, or identification of wording to be deleted.)* Note: Proposed text should be in legislative format, that is, use underscore to denote wording to be inserted (inserted wording) and strike-through to denote wording to be deleted (~~deleted wording~~). Delete exception.

4. **Statement of Problem and Substantiation for Proposal.** Note: State the problem that will be resolved by your recommendation. Give the specific reason for your proposal including copies of tests, research papers, fire experience, etc. If more than 200 words, it may be abstracted for publication. A properly installed and maintained system should be free of ground faults. The occurrence of one or more ground faults should be required to cause a "trouble" signal because it indicates a condition that could contribute to future malfunction of the system. Ground fault protection has been widely available on these systems for years and its cost is negligible. Requiring it on all systems will promote better installations, maintenance and reliability.

5. ☒ **This Proposal is Original Material.** Note: Original material is considered to be the submitter's own idea based on or as a result of his/her own experience, thought, or research and, to the best of his/her knowledge, is not copied from another source.

   ☐ **This Proposal is Not Original Material; Its Source** ***(if known)*** **is as Follows:** _____

Sample

I hereby grant the NFPA all and full rights in copyright to this proposal, and I understand that I acquire no rights in any publication of NFPA in which this proposal in this or another similar or analogous form is used.

Signature ***(Required)*** John B. Smith

PLEASE USE SEPARATE FORM FOR EACH PROPOSAL • NFPA FAX (617) 770-3500

Mail to: Secretary, Standards Council • NFPA • 1 Batterymarch Park • PO Box 9101 • Quincy, MA 02269-9101

Copyright National Fire Protection Association
Provided by IHS under license with NFPA
No reproduction or networking permitted without license from IHS
Not for Resale

NFPA Technical Committee Document Proposal Form

Note: All proposals must be received by 5:00 p.m. EST/EDST on the published proposal closing date.

For further information on the standards-making process, please contact Codes and Standards Administration at 617-984-7249. For technical assistance, please call NFPA at 617-770-3000.

FOR OFFICE USE ONLY
Log #: _____
Date Rec'd: _____

Please indicate in which format you wish to receive your ROP/ROC: ☐ **CD ROM** ☐ **paper** ☐ **download**
(Note: In choosing the download option you intend to view the ROP/ROC from our Website. No copy will be sent to you.)

Date _____ **Name** _____ **Telephone** _____
Company _____
Address _____ **City** _____ **State** _____ **Zip** _____
Please indicate organization represented (if any) _____

1. **a) NFPA Document Title** _____
   b) NFPA No. & Edition _____ **c) Section/Paragraph** _____

2. **Proposal Recommends:** *(check one)* ☐ **new text** ☐ **revised text** ☐ **deleted text**

3. **Proposal.** *(Include proposed new or revised wording, or identification of wording to be deleted.)* Note: Proposed text should be in legislative format, that is, use underscore to denote wording to be inserted (inserted wording) and strike-through to denote wording to be deleted (~~deleted wording~~). _____

4. **Statement of Problem and Substantiation for Proposal.** Note: State the problem that will be resolved by your recommendation. Give the specific reason for your proposal including copies of tests, research papers, fire experience, etc. If more than 200 words, it may be abstracted for publication. _____

5. ☐ **This Proposal is Original Material.** Note: Original material is considered to be the submitter's own idea based on or as a result of his/her own experience, thought, or research and, to the best of his/her knowledge, is not copied from another source.

   ☐ **This Proposal is Not Original Material; Its Source *(if known)* is as Follows:** _____

I hereby grant the NFPA all and full rights in copyright to this proposal, and I understand that I acquire no rights in any publication of NFPA in which this proposal in this or another similar or analogous form is used.

Signature *(Required)* _____

PLEASE USE SEPARATE FORM FOR EACH PROPOSAL • NFPA FAX (617) 770-3500

Mail to: Secretary, Standards Council • NFPA • 1 Batterymarch Park • PO Box 9101 • Quincy, MA 02269-9101

Copyright National Fire Protection Association
Provided by IHS under license with NFPA
No reproduction or networking permitted without license from IHS
Not for Resale