NFPA 1002

Standard on Fire Apparatus Driver/Operator Professional Qualifications

2003 Edition

NFPA, 1 Batterymarch Park, PO Box 9101, Quincy, MA 02269-9101
An International Codes and Standards Organization

NFPA License Agreement

This document is copyrighted by the National Fire Protection Association (NFPA), 1 Batterymarch Park, Quincy, MA 02269-9101 USA.
All rights reserved.

NFPA grants you a license as follows: The right to download an electronic file of this NFPA document for temporary storage on one computer for purposes of viewing and/or printing one copy of the NFPA document for individual use. Neither the electronic file nor the hard copy print may be reproduced in any way. In addition, the electronic file may not be distributed elsewhere over computer networks or otherwise. The hard copy print may only be used personally or distributed to other employees for their internal use within your organization.

--`,,,,-`-`,,`,,`,`,,`---

Copyright National Fire Protection Association
Provided by IHS under license with NFPA
No reproduction or networking permitted without license from IHS

Not for Resale

IMPORTANT NOTICES AND DISCLAIMERS CONCERNING NFPA DOCUMENTS

NOTICE AND DISCLAIMER OF LIABILITY CONCERNING THE USE OF NFPA DOCUMENTS

NFPA codes, standards, recommended practices, and guides, of which the document contained herein is one, are developed through a consensus standards development process approved by the American National Standards Institute. This process brings together volunteers representing varied viewpoints and interests to achieve consensus on fire and other safety issues. While the NFPA administers the process and establishes rules to promote fairness in the development of consensus, it does not independently test, evaluate, or verify the accuracy of any information or the soundness of any judgments contained in its codes and standards.

The NFPA disclaims liability for any personal injury, property or other damages of any nature whatsoever, whether special, indirect, consequential or compensatory, directly or indirectly resulting from the publication, use of, or reliance on this document. The NFPA also makes no guaranty or warranty as to the accuracy or completeness of any information published herein.

In issuing and making this document available, the NFPA is not undertaking to render professional or other services for or on behalf of any person or entity. Nor is the NFPA undertaking to perform any duty owed by any person or entity to someone else. Anyone using this document should rely on his or her own independent judgment or, as appropriate, seek the advice of a competent professional in determining the exercise of reasonable care in any given circumstances.

The NFPA has no power, nor does it undertake, to police or enforce compliance with the contents of this document. Nor does the NFPA list, certify, test or inspect products, designs, or installations for compliance with this document. Any certification or other statement of compliance with the requirements of this document shall not be attributable to the NFPA and is solely the responsibility of the certifier or maker of the statement.

--`,,,-`-`,,`,,`,`,,`---

Copyright National Fire Protection Association
Provided by IHS under license with NFPA
No reproduction or networking permitted without license from IHS

Not for Resale

ADDITIONAL NOTICES AND DISCLAIMERS

Updating of NFPA Documents

Users of NFPA codes, standards, recommended practices, and guides should be aware that these documents may be superseded at any time by the issuance of new editions or may be amended from time to time through the issuance of Tentative Interim Amendments. An official NFPA document at any point in time consists of the current edition of the document together with any Tentative Interim Amendments and any Errata then in effect. In order to determine whether a given document is the current edition and whether it has been amended through the issuance of Tentative Interim Amendments or corrected through the issuance of Errata, consult appropriate NFPA publications such as the National Fire Codes® Subscription Service, visit the NFPA website at www.nfpa.org, or contact the NFPA at the address listed below.

Interpretations of NFPA Documents

A statement, written or oral, that is not processed in accordance with Section 6 of the Regulations Governing Committee Projects shall not be considered the official position of NFPA or any of its Committees and shall not be considered to be, nor be relied upon as, a Formal Interpretation.

Patents

The NFPA does not take any position with respect to the validity of any patent rights asserted in connection with any items which are mentioned in or are the subject of NFPA codes, standards, recommended practices, and guides, and the NFPA disclaims liability for the infringement of any patent resulting from the use of or reliance on these documents. Users of these documents are expressly advised that determination of the validity of any such patent rights, and the risk of infringement of such rights, is entirely their own responsibility.

NFPA adheres to applicable policies of the American National Standards Institute with respect to patents. For further information contact the NFPA at the address listed below.

Law and Regulations

Users of these documents should consult applicable federal, state, and local laws and regulations. NFPA does not, by the publication of its codes, standards, recommended practices, and guides, intend to urge action that is not in compliance with applicable laws, and these documents may not be construed as doing so.

Copyrights

This document is copyrighted by the NFPA. It is made available for a wide variety of both public and private uses. These include both use, by reference, in laws and regulations, and use in private self-regulation, standardization, and the promotion of safe practices and methods. By making this document available for use and adoption by public authorities and private users, the NFPA does not waive any rights in copyright to this document.

Use of NFPA documents for regulatory purposes should be accomplished through adoption by reference. The term "adoption by reference" means the citing of title, edition, and publishing information only. Any deletions, additions, and changes desired by the adopting authority should be noted separately in the adopting instrument. In order to assist NFPA in following the uses made of its documents, adopting authorities are requested to notify the NFPA (Attention: Secretary, Standards Council) in writing of such use. For technical assistance and questions concerning adoption of NFPA documents, contact NFPA at the address below.

For Further Information

All questions or other communications relating to NFPA codes, standards, recommended practices, and guides and all requests for information on NFPA procedures governing its codes and standards development process, including information on the procedures for requesting Formal Interpretations, for proposing Tentative Interim Amendments, and for proposing revisions to NFPA documents during regular revision cycles, should be sent to NFPA headquarters, addressed to the attention of the Secretary, Standards Council, NFPA, 1 Batterymarch Park, P.O. Box 9101, Quincy, MA 02269-9101.

For more information about NFPA, visit the NFPA website at www.nfpa.org.

Copyright National Fire Protection Association
Provided by IHS under license with NFPA
No reproduction or networking permitted without license from IHS
Not for Resale

Copyright © 2003, National Fire Protection Association, All Rights Reserved

NFPA 1002

Standard on

Fire Apparatus Driver/Operator Professional Qualifications

2003 Edition

This edition of NFPA 1002, *Standard on Fire Apparatus Driver/Operator Professional Qualifications,* was prepared by the Technical Committee on Fire Fighter Professional Qualifications, released by the Technical Correlating Committee on Professional Qualifications, and acted on by NFPA at its May Association Technical Meeting held May 18–21, 2003, in Dallas, TX. It was issued by the Standards Council on July 18, 2003, with an effective date of August 7, 2003, and supersedes all previous editions.

This edition of NFPA 1002 was approved as an American National Standard on July 18, 2003.

Origin and Development of NFPA 1002

In 1972, the Joint Council of National Fire Service Organizations (JCNFSO) created the National Professional Qualifications Board (NPQB) for the fire service to facilitate the development of nationally applicable performance standards for uniformed fire service personnel. On December 14, 1972, the board established four technical committees to develop those standards, using the National Fire Protection Association (NFPA) standards-making system. The initial committees addressed the following career areas: fire fighter, fire officer, fire service instructor, and fire inspector and investigator. The Technical Committee on Fire Fighter Professional Qualifications met regularly after the adoption of NFPA 1001 to produce the first edition of this document, which was adopted by the NFPA in 1976. NFPA 1002 was the second in the series of fire fighter professional qualifications standards.

Additional editions were adopted and issued by the NFPA under the auspices of the NPQB in 1982 and 1988.

The original concept of the professional qualifications standards, as directed by the JCNFSO and the NPQB, was to develop an interrelated set of performance standards specifically for the uniformed fire service. The various levels of achievement in the standards were to build upon each other within a strictly defined career ladder. In the late 1980s, revisions of the standards recognized that the documents should stand on their own merit in terms of job performance requirements (JPRs) for a given field. Accordingly, the strict career ladder concept was revised, except for the progression from fire fighter to fire officer, in order to allow civilian entry into many of the fields. These revisions facilitated the use of the documents by other than the uniformed fire services.

In 1990, responsibility for the appointment of professional qualifications committees and the development of the professional qualifications standards were assumed by the NFPA. The Professional Qualifications Correlating Committee, appointed by the NFPA Standards Council in 1990, assumed responsibility for coordinating the requirements of all of the professional qualifications documents.

The JPR format of this document is consistent with the other standards in the professional qualifications project. Each JPR consists of the task to be performed; the tools, equipment, or materials that must be provided to successfully complete the task; evaluation parameters and/or performance outcomes; and lists of requisite knowledge and skills one must have to be able to perform the task. The intent of the Technical Committee on Fire Fighter Professional Qualifications is to provide clear and concise job performance requirements that can be used to determine that an individual, when measured to the standard, possesses the skills and knowledge to perform as a fire fighter.

In the 2003 edition of the document, the technical committee made changes to bring it into conformance with the new NFPA *Manual of Style* and several small additions.

In Memoriam, September 11, 2001

We pay tribute to the 343 members of FDNY who gave their lives to save civilian victims on September 11, 2001, at the World Trade Center. They are true American heroes in death, but they were also American heroes in life. We will keep them in our memory and in our hearts. They are the embodiment of courage, bravery, and dedication. May they rest in peace.

Copyright National Fire Protection Association
Provided by IHS under license with NFPA
No reproduction or networking permitted without license from IHS
Not for Resale

Technical Correlating Committee on Professional Qualifications

Douglas P. Forsman, *Chair*
Union Colony Fire & Rescue Authority, CO [E]

Fred G. Allinson, Seattle, WA [L]
Rep. National Volunteer Fire Council
Stephen P. Austin, State Farm Insurance Company, DE [I]
Rep. International Association of Arson Investigators Inc.
Timothy L. Bradley, North Carolina Fire Commission, NC [E]
Rep. TC on Fire Service Instructor Professional Qualifications
(Vote Limited to Professional Qualifications System Management)
Boyd F. Cole, SunnyCor Incorporated/SmartCoat Inc., CA [M]
Rep. TC on Emergency Vehicle Mechanic Technicians Professional Qualifications
(Vote Limited to Professional Qualifications System Management)
Yves Desjardins, Ecole nationale des pompiers du Quebec, Canada [U]
David T. Endicott, Stevensville, MD [U]
Rep. TC on Fire Fighter Professional Qualifications
(Vote Limited to Professional Qualifications System Management)
Gerald C. Evans, Salt Lake City Fire Department, UT [L]
Rep. TC on Public Safety Telecommunicator Professional Qualifications
(Vote Limited to Professional Qualifications System Management)
Kelly Fox, Washington State Council of Fire Fighters, WA [L]
Rep. International Association of Fire Fighters
Jon C. Jones, Jon Jones & Associates, MA [SE]
Rep. TC on Industrial Fire Brigades Professional Qualifications
(Vote Limited to Professional Qualifications System Management)
Alan E. Joos, Utah Fire and Rescue Academy, UT [E]
Rep. International Fire Service Accreditation Congress
Charles E. Kirtley, City of Guymon, Oklahoma, Fire Department, OK [U]
Rep. TC on Public Fire Educator Professional Qualifications
(Vote Limited to Professional Qualifications System Management)
Barbara L. Koffron, Phoenix Fire Department, AZ [U]
Rep. TC on Fire Inspector Professional Qualifications
(Vote Limited to Professional Qualifications System Management)
Michael J. McGovern, Lakewood Fire Department, WA [U]
Gerard J. Naylis, U.S. Consumer Product Safety Commission, NY [C]
Rep. TC on Fire Investigator Professional Qualifications
(Vote Limited to Professional Qualifications System Management)
Chris Neal, Fire Protection Publications, OK [M]
Rep. TC on Fire Officer Professional Qualifications
(Vote Limited to Professional Qualifications System Management)
David K. Nelson, David K. Nelson Consultants, CA [SE]
Rep. TC on Wildfire Suppression Professional Qualifications
(Vote Limited to Professional Qualifications System Management)
William E. Peterson, Plano Fire Department, TX [M]
Rep. International Fire Service Training Association
Hugh A. Pike, U.S. Air Force Fire Protection, FL [E]
Rep. TC on Rescue Technician Professional Qualifications
(Vote Limited to Professional Qualifications System Management)
Richard Powell, Saginaw Township Fire Department, MI [L]
Rep. TC on Accreditation and Certification
(Vote Limited to Professional Qualifications System Management)
Johnny G. Wilson, Georgia Firefighter Standards and Training Council, GA [E]
Rep. National Board on Fire Service Professional Qualification

Alternates

Jack R. Reed, Iowa Professional Fire Fighters, IA [L]
(Alt. to K. Fox)
Michael W. Robinson, Baltimore County Fire Department, MD [E]
(Alt. to J. G. Wilson)

Frank E. Florence, NFPA Staff Liaison

This list represents the membership at the time the Committee was balloted on the final text of this edition. Since that time, changes in the membership may have occurred. A key to classifications is found at the back of the document.

NOTE: Membership on a committee shall not in and of itself constitute an endorsement of the Association or any document developed by the committee on which the member serves.

Committee Scope: This Committee shall have primary responsibility for the management of the NFPA Professional Qualifications Project and documents related to professional qualifications for fire service, public safety, and related personnel.

Copyright National Fire Protection Association
Provided by IHS under license with NFPA
No reproduction or networking permitted without license from IHS
Not for Resale

Technical Committee on Fire Fighter Professional Qualifications

David T. Endicott, *Chair*
Stevensville, MD [U]

Steve Willis, *Secretary*
MFTE/SMTC, ME [SE]
Rep. International Society of Fire Service Instructors

William Anderson, Carlsbad Fire Department, CA [L]
Salvator Camasi, Lil Lectric Incorporated, WA [E]
Jack Casner, The Great American Insurance Company, CT [I]
Yves Desjardins, Ecole nationale des pompiers du Quebec, Canada [U]
Collin J. DeWitt, Town of Gilbert Fire Department, AZ [U]
David R. Fischer, State Fire Marshal, NV [SE]
C. Gordon Henderson, City of Rome Fire Department, GA [E]
Rep. Georgia State Firefighter's Association, Inc.
Marcia S. Holtz, City of Madison Fire Department, WI [L]
Rep. Women in the Fire Service
F. Patrick Marlatt, Maryland Fire and Rescue Institute, MD [SE]
Henry Morse, Fire Service Testing Company, Inc., FL [RT]
Hugh A. Pike, U.S. Air Force Fire Protection, FL [E]
Mickey Pophin, Texas Commission on Fire Protection, TX [E]
Thomas P. Ruane, Fire Service Training Consultant, AZ [SE]
Michael A. Wieder, Oklahoma State University, OK [M]
Rep. Oklahoma State University Fire Programs
Michael L. Young, Volunteer Firemen's Insurance Services, Inc., PA [I]
Rep. Volunteer Firemen's Insurance Services, Inc.

Alternates

Scott L. Davidson, Volunteer Firemen's Insurance Services, Inc., PA [I]
(Alt. to M. L. Young)
Terese M. Floren, Women in the Fire Service, WI [L]
(Alt. to M. S. Holtz)
Robert H. Noll, Yukon Fire Department, OK [M]
(Alt. to M. A. Wieder)
Ted J. Pagels, City of DePere, WI [SE]
(Alt. to S. Willis)
Robert Singletary, City of Warner Robins Fire Department, GA [E]
(Alt. to C. G. Henderson)

Frank E. Florence, NFPA Staff Liaison

This list represents the membership at the time the Committee was balloted on the final text of this edition. Since that time, changes in the membership may have occurred. A key to classifications is found at the back of the document.

NOTE: Membership on a committee shall not in and of itself constitute an endorsement of the Association or any document developed by the committee on which the member serves.

Committee Scope: This Committee shall have primary responsibility for documents on professional competence required of fire fighters.

Copyright National Fire Protection Association
Provided by IHS under license with NFPA
No reproduction or networking permitted without license from IHS
Not for Resale

Contents

Chapter 1 Administration **1002–** 5
1.1 Scope **1002–** 5
1.2 Purpose **1002–** 5
1.3 Exceeding Minimum Requirements **1002–** 5
1.4 General **1002–** 5

Chapter 2 Referenced Publications **1002–** 5
2.1 General **1002–** 5
2.2 NFPA Publications **1002–** 5
2.3 Other Publications. (Reserved) **1002–** 6

Chapter 3 Definitions **1002–** 6
3.1 General **1002–** 6
3.2 NFPA Official Definitions **1002–** 6
3.3 General Definitions **1002–** 6

Chapter 4 General Requirements **1002–** 7
4.1 General **1002–** 7
4.2 Preventive Maintenance **1002–** 7
4.3 Driving/Operating **1002–** 7

Chapter 5 Apparatus Equipped with Fire Pump ... **1002–** 8
5.1 General **1002–** 8
5.2 Operations **1002–** 8

Chapter 6 Apparatus Equipped with an Aerial Device **1002–** 9
6.1 General **1002–** 9
6.2 Operations **1002–** 9

Chapter 7 Apparatus Equipped with a Tiller **1002–** 9
7.1 General **1002–** 9
7.2 Operations **1002–** 9

Chapter 8 Wildland Fire Apparatus **1002–**10
8.1 General **1002–**10
8.2 Operations **1002–**10

Chapter 9 Aircraft Rescue and Fire-Fighting Apparatus **1002–**11
9.1 General **1002–**11
9.2 Operations **1002–**11

Chapter 10 Mobile Water Supply Apparatus **1002–**12
10.1 General **1002–**12
10.2 Operations **1002–**12

Annex A Explanatory Material **1002–**12

Annex B Job Performance Requirements **1002–**16

Annex C Informational References **1002–**18

Index **1002–**20

Copyright National Fire Protection Association
Provided by IHS under license with NFPA
No reproduction or networking permitted without license from IHS
Not for Resale

NFPA 1002

Standard on

Fire Apparatus Driver/Operator Professional Qualifications

2003 Edition

IMPORTANT NOTE: This NFPA document is made available for use subject to important notices and legal disclaimers. These notices and disclaimers appear in all publications containing this document and may be found under the heading "Important Notices and Disclaimers Concerning NFPA Documents." They can also be obtained on request from NFPA or viewed at www.nfpa.org/disclaimers.

NOTICE: An asterisk (*) following the number or letter designating a paragraph indicates that explanatory material on the paragraph can be found in Annex A.

Changes other than editorial are indicated by a vertical rule beside the paragraph, table, or figure in which the change occurred. These rules are included as an aid to the user in identifying changes from the previous edition. Where one or more complete paragraphs have been deleted, the deletion is indicated by a bullet (•) between the paragraphs that remain.

A reference in brackets [ ] following a section or paragraph indicates material that has been extracted from another NFPA document. As an aid to the user, Annex C lists the complete title and edition of the source documents for both mandatory and nonmandatory extracts. Editorial changes to extracted material consist of revising references to an appropriate division in this document or the inclusion of the document number with the division number when the reference is to the original document. Requests for interpretations or revisions of extracted text shall be sent to the technical committee responsible for the source document.

Information on referenced publications can be found in Chapter 2 and Annex C.

Chapter 1 Administration

1.1 Scope. This standard shall identify the minimum job performance requirements for fire fighters who drive and operate fire apparatus, in both emergency and nonemergency situations.

1.2* Purpose. The purpose of this standard shall be to specify the minimum job performance requirements for service as a fire department emergency vehicle driver, pump operator, aerial operator, tiller operator, wildland apparatus operator, aircraft rescue and fire-fighting apparatus operator, and mobile water supply apparatus operator.

1.3 Exceeding Minimum Requirements. It is not the intent of this standard to restrict any jurisdiction from exceeding these minimum requirements.

1.4 General.

1.4.1 The fire department vehicle driver/operators shall be licensed to drive all vehicles they are expected to operate.

1.4.2* The fire department driver/operator shall be subject to periodic medical evaluation, as required by NFPA 1500, Section 10.1, Medical Requirements, to determine that the driver/operator is medically fit to perform the duties of a fire department vehicle driver/operator.

1.4.3* All driver/operators who drive fire apparatus shall meet the objectives of Chapter 4 for each type of apparatus they will be expected to operate.

1.4.4 The fire apparatus driver who is required to operate an apparatus equipped with an attack or fire pump shall meet the requirements of Chapter 5.

1.4.5 The fire apparatus driver who is required to operate an apparatus equipped with an aerial device shall meet the requirements of Chapter 6.

1.4.6 The fire apparatus driver who is required to function in the tiller position shall meet the requirements of Chapter 7.

1.4.7 The fire apparatus driver who is required to operate wildland fire apparatus shall meet the requirements of Chapter 8.

1.4.8 The fire apparatus driver who is required to operate aircraft rescue and fire-fighting apparatus shall meet the requirements of Chapter 9.

1.4.9 The mobile water supply apparatus driver shall meet the requirements of Chapter 10.

1.4.10* Job performance requirements defined by this standard shall be evaluated by individuals approved by the authority having jurisdiction.

1.4.11 The job performance requirements need not be mastered in the order in which they appear. The local, state/provincial, or federal training programs shall establish the instructional priority and the training program content to prepare individuals to meet the job performance requirements of this standard.

1.4.12 The job performance requirements of Chapters 4 through 10 shall be performed utilizing vehicles of similar weight, wheelbase, and function as those expected to be operated in the performance of the driver/operator's normal duties.

1.4.13* Fire apparatus drivers who are expected to operate vehicles off-road shall meet the requirements of 8.1.2, in addition to the applicable requirements of Chapters 4 through 7.

Chapter 2 Referenced Publications

2.1 General. The documents or portions thereof listed in this chapter are referenced within this standard and shall be considered part of the requirements of this document.

2.2 NFPA Publications. National Fire Protection Association, 1 Batterymarch Park, P.O. Box 9101, Quincy, MA 02269-9101.

NFPA 13, *Standard for the Installation of Sprinkler Systems,* 2002 edition.

NFPA 13D, *Standard for the Installation of Sprinkler Systems in One- and Two-Family Dwellings and Manufactured Homes,* 2002 edition.

NFPA 13E, *Recommended Practice for Fire Department Operations in Properties Protected by Sprinkler and Standpipe Systems,* 2000 edition.

NFPA 13R, *Standard for the Installation of Sprinkler Systems in Residential Occupancies up to and Including Four Stories in Height,* 2002 edition.

NFPA 14, *Standard for the Installation of Standpipe and Hose Systems,* 2003 edition.

Copyright National Fire Protection Association
Provided by IHS under license with NFPA
No reproduction or networking permitted without license from IHS
Not for Resale

NFPA 1001, *Standard for Fire Fighter Professional Qualifications,* 2002 edition.

NFPA 1003, *Standard for Airport Fire Fighter Professional Qualifications,* 2000 edition.

NFPA 1500, *Standard on Fire Department Occupational Safety and Health Program,* 2002 edition.

NFPA 1901, *Standard for Automotive Fire Apparatus,* 2003 edition.

2.3 Other Publications. (Reserved)

Chapter 3 Definitions

3.1* General. The definitions contained in this chapter shall apply to the terms used in this standard. Where terms are not included, common usage of the terms shall apply.

3.2 NFPA Official Definitions.

3.2.1* Approved. Acceptable to the authority having jurisdiction.

3.2.2* Authority Having Jurisdiction (AHJ). An organization, office, or individual responsible for enforcing the requirements of a code or standard, or for approving equipment, materials, an installation, or a procedure.

3.2.3 Shall. Indicates a mandatory requirement.

3.2.4 Standard. A document, the main text of which contains only mandatory provisions using the word "shall" to indicate requirements and which is in a form generally suitable for mandatory reference by another standard or code or for adoption into law. Nonmandatory provisions shall be located in an appendix or annex, footnote, or fine-print note and are not to be considered a part of the requirements of a standard.

3.3 General Definitions.

3.3.1 Aerial Apparatus. A piece of fire apparatus with a permanently mounted, power-operated elevating device, including aerial ladders, aerial ladder platforms, telescoping aerial platforms, articulating aerial platforms, and elevating water delivery systems.

3.3.2 Aerial Device. An aerial ladder, elevating platform, aerial ladder platform, or water tower that is designed to position personnel, handle materials, provide egress, and discharge water.

3.3.3 Aerial Operator. The fire apparatus driver who has met the requirements of Chapter 6 for the operation of apparatus equipped with aerial devices.

3.3.4 Aircraft Rescue and Fire-Fighting (ARFF) Vehicle. A vehicle intended to carry rescue and fire-fighting equipment for rescuing occupants and combating fires in aircraft at, or in the vicinity of, an airport.

3.3.5 Angle of Approach. The smallest angle made between the road surface and a line drawn from the front point of ground contact of the front tire to any projection of the apparatus in front of the front axle.

3.3.6 Angle of Departure. The smallest angle made between the road surface and the line drawn from the rear point of ground contact of the rear tire to any projection of the apparatus behind the rear axle.

3.3.7 Fire Apparatus. A fire department emergency vehicle used for rescue, fire suppression, or other specialized functions. [**1710:**3.3]

3.3.8 Fire Apparatus Driver. The fire fighter who has met the requirements defined in Chapter 4.

3.3.9 Fire Department. An organization providing rescue, fire suppression, and related activities, including any public, governmental, private, industrial, or military organization engaging in this type of activity.

3.3.10 Fire Department Pumper. A piece of fire apparatus with a permanently mounted fire pump that has a rated discharge capacity of 750 gpm (2850 L/min) or greater as defined in NFPA 1901.

3.3.11 Fire Department Vehicle. Any vehicle, including fire apparatus, operated by a fire department.

3.3.12 Fire Pump. A water pump with a rated capacity of 1000 L/min (250 gpm) or greater at 1000 kPa (150 psi) net pump pressure that is mounted on a fire apparatus and used for fire fighting. [**1901:**3.3]

3.3.13 Foam System. A system provided on fire apparatus for the delivery of a proportioned foam and water mixture for use in fire extinguishment. The system includes a concentrate tank, a method for removing the concentrate from the tank, a foam-liquid proportioning system, and a method (e.g., hand lines or fixed turret nozzles) of delivering the proportioned foam to the fire.

3.3.14 Job Performance Requirement. A statement that describes a specific job task, lists the items necessary to complete the task, and defines measurable or observable outcomes and evaluation areas for the specific task. [**1000:**3.3]

3.3.15 Liquid Surge. The force imposed upon a fire apparatus by the contents of a partially filled water or foam concentrate tank when the vehicle is accelerated, decelerated, or turned.

3.3.16 Mobile Water Supply Apparatus (Tanker, Tender). A vehicle designed primarily for transporting (pickup, transporting, and delivering) water to fire emergency scenes to be applied by other vehicles or pumping equipment. [**1901:**3.3]

3.3.17 Off-Road Use. Use of fire department vehicles in areas where there is a need to traverse steep terrain or to cross natural hazards on or protruding from the ground.

3.3.18 Pump Operator. The fire apparatus driver/operator who has met the requirements of Chapter 5 for the operation of apparatus equipped with an attack or fire pump.

3.3.19 Pumping System. A pump, the piping, and associated devices mounted permanently on a piece of fire apparatus for the purpose of delivering a fire stream.

3.3.20 Requisite Knowledge. Fundamental knowledge one must have in order to perform a specific task. [**1031:**3.3]

3.3.21 Requisite Skills. The essential skills one must have in order to perform a specific task. [**1031:**3.3]

3.3.22 Task. A specific job behavior or activity.

3.3.23 Tiller Aerial Apparatus. A tractor-trailer aerial apparatus with a steering wheel connected to the rear axle for maneuvering the rear portion of the apparatus.

3.3.24 Tiller Operator. The fire apparatus driver/operator who has met the requirements of Chapter 7.

Copyright National Fire Protection Association
Provided by IHS under license with NFPA
No reproduction or networking permitted without license from IHS
Not for Resale

3.3.25* Wildland Fire Apparatus. Fire apparatus designed for fighting wildland fires that is equipped with a pump having a capacity normally between 38 L/min and 1900 L/min (10 gpm and 500 gpm), a water tank, limited hose and equipment, and that has pump and roll capability. [**1906:**3.3]

Chapter 4 General Requirements

4.1 General. Prior to operating fire department vehicles, the fire apparatus driver/operator shall meet the job performance requirements defined in Sections 4.2 and 4.3.

4.2 Preventive Maintenance.

4.2.1* Perform routine tests, inspections, and servicing functions on the systems and components specified in the following list, given a fire department vehicle and its manufacturer's specifications, so that the operational status of the vehicle is verified:

(1) Battery(ies)
(2) Braking system
(3) Coolant system
(4) Electrical system
(5) Fuel
(6) Hydraulic fluids
(7) Oil
(8) Tires
(9) Steering system
(10) Belts
(11) Tools, appliances, and equipment

(A) Requisite Knowledge. Manufacturer specifications and requirements, policies, and procedures of the jurisdiction.

(B) Requisite Skills. The ability to use hand tools, recognize system problems, and correct any deficiency noted according to policies and procedures.

4.2.2 Document the routine tests, inspections, and servicing functions, given maintenance and inspection forms, so that all items are checked for operation and deficiencies are reported.

(A) Requisite Knowledge. Departmental requirements for documenting maintenance performed and the importance of keeping accurate records.

(B) Requisite Skills. The ability to use tools and equipment and complete all related departmental forms.

4.3 Driving/Operating.

4.3.1* Operate a fire department vehicle, given a vehicle and a predetermined route on a public way that incorporates the maneuvers and features, specified in the following list, that the driver/operator is expected to encounter during normal operations, so that the vehicle is operated in compliance with all applicable state and local laws, departmental rules and regulations, and the requirements of NFPA 1500, Section 4.2:

(1) Four left turns and four right turns
(2) A straight section of urban business street or a two-lane rural road at least 1.6 km (1 mile) in length
(3) One through-intersection and two intersections where a stop has to be made
(4) One railroad crossing
(5) One curve, either left or right
(6) A section of limited-access highway that includes a conventional ramp entrance and exit and a section of road long enough to allow two lane changes
(7) A downgrade steep enough and long enough to require down-shifting and braking
(8) An upgrade steep enough and long enough to require gear changing to maintain speed
(9) One underpass or a low clearance or bridge

(A) Requisite Knowledge. The effects on vehicle control of liquid surge, braking reaction time, and load factors; effects of high center of gravity on roll-over potential, general steering reactions, speed, and centrifugal force; applicable laws and regulations; principles of skid avoidance, night driving, shifting, and gear patterns; negotiating intersections, railroad crossings, and bridges; weight and height limitations for both roads and bridges; identification and operation of automotive gauges; and operational limits.

(B) Requisite Skills. The ability to operate passenger restraint devices; maintain safe following distances; maintain control of the vehicle while accelerating, decelerating, and turning, given road, weather, and traffic conditions; operate under adverse environmental or driving surface conditions; and use automotive gauges and controls.

4.3.2* Back a vehicle from a roadway into restricted spaces on both the right and left sides of the vehicle, given a fire department vehicle, a spotter, and restricted spaces 3.7 m (12 ft) in width, requiring 90-degree right-hand and left-hand turns from the roadway, so that the vehicle is parked within the restricted areas without having to stop and pull forward and without striking obstructions.

(A) Requisite Knowledge. Vehicle dimensions, turning characteristics, spotter signaling, and principles of safe vehicle operation.

(B) Requisite Skills. The ability to use mirrors and judge vehicle clearance.

4.3.3* Maneuver a vehicle around obstructions on a roadway while moving forward and in reverse, given a fire department vehicle, a spotter for backing, and a roadway with obstructions, so that the vehicle is maneuvered through the obstructions without stopping to change the direction of travel and without striking the obstructions.

(A) Requisite Knowledge. Vehicle dimensions, turning characteristics, the effects of liquid surge, spotter signaling, and principles of safe vehicle operation.

(B) Requisite Skills. The ability to use mirrors and judge vehicle clearance.

4.3.4* Turn a fire department vehicle 180 degrees within a confined space, given a fire department vehicle, a spotter for backing up, and an area in which the vehicle cannot perform a U-turn without stopping and backing up, so that the vehicle is turned 180 degrees without striking obstructions within the given space.

(A) Requisite Knowledge. Vehicle dimensions, turning characteristics, the effects of liquid surge, spotter signaling, and principles of safe vehicle operation.

(B) Requisite Skills. The ability to use mirrors and judge vehicle clearance.

4.3.5* Maneuver a fire department vehicle in areas with restricted horizontal and vertical clearances, given a fire department vehicle and a course that requires the operator to move through areas of restricted horizontal and vertical clearances, so that the operator accurately judges the ability of the vehicle to pass through the openings and so that no obstructions are struck.

Copyright National Fire Protection Association
Provided by IHS under license with NFPA
No reproduction or networking permitted without license from IHS
Not for Resale

(A) Requisite Knowledge. Vehicle dimensions, turning characteristics, the effects of liquid surge, spotter signaling, and principles of safe vehicle operation.

(B) Requisite Skills. The ability to use mirrors and judge vehicle clearance.

4.3.6* Operate a vehicle using defensive driving techniques under emergency conditions, given a fire department vehicle and emergency conditions, so that control of the vehicle is maintained.

(A) Requisite Knowledge. The effects on vehicle control of liquid surge, braking reaction time, and load factors; the effects of high center of gravity on roll-over potential, general steering reactions, speed, and centrifugal force; applicable laws and regulations; principles of skid avoidance, night driving, shifting, and gear patterns; negotiation of intersections, railroad crossings, and bridges; weight and height limitations for both roads and bridges; identification and operation of automotive gauges; and operational limits.

(B) Requisite Skills. The ability to operate passenger restraint devices; maintain safe following distances; maintain control of the vehicle while accelerating, decelerating, and turning, given road, weather, and traffic conditions; operate under adverse environmental or driving surface conditions; and use automotive gauges and controls.

4.3.7* Operate all fixed systems and equipment on the vehicle not specifically addressed elsewhere in this standard, given systems and equipment, manufacturer's specifications and instructions, and departmental policies and procedures for the systems and equipment, so that each system or piece of equipment is operated in accordance with the applicable instructions and policies.

(A) Requisite Knowledge. Manufacturer's specifications and operating procedures, and policies and procedures of the jurisdiction.

(B) Requisite Skills. The ability to deploy, energize, and monitor the system or equipment and to recognize and correct system problems.

Chapter 5 Apparatus Equipped with Fire Pump

5.1* General. The requirements of Fire Fighter I as specified in NFPA 1001, and the job performance requirements defined in Sections 5.1 and 5.2 shall be met prior to certification as a fire department driver/operator — pumper.

5.1.1 Perform the routine tests, inspections, and servicing functions specified in the following list in addition to those in 4.2.1, given a fire department pumper and its manufacturer's specifications, so that the operational status of the pumper is verified:

(1) Water tank and other extinguishing agent levels (if applicable)
(2) Pumping systems
(3) Foam systems

(A) Requisite Knowledge. Manufacturer's specifications and requirements, and policies and procedures of the jurisdiction.

(B) Requisite Skills. The ability to use hand tools, recognize system problems, and correct any deficiency noted according to policies and procedures.

5.2 Operations.

5.2.1 Produce effective hand or master streams, given the sources specified in the following list, so that the pump is engaged, all pressure control and vehicle safety devices are set, the rated flow of the nozzle is achieved and maintained, and the apparatus is continuously monitored for potential problems:

(1) Internal tank
(2)*Pressurized source
(3) Static source
(4) Transfer from internal tank to external source

(A) Requisite Knowledge. Hydraulic calculations for friction loss and flow using both written formulas and estimation methods, safe operation of the pump, problems related to small-diameter or dead-end mains, low-pressure and private water supply systems, hydrant coding systems, and reliability of static sources.

(B) Requisite Skills. The ability to position a fire department pumper to operate at a fire hydrant and at a static water source, power transfer from vehicle engine to pump, draft, operate pumper pressure control systems, operate the volume/pressure transfer valve (multistage pumps only), operate auxiliary cooling systems, make the transition between internal and external water sources, and assemble hose lines, nozzles, valves, and appliances.

5.2.2 Pump a supply line of 65 mm (2½ in.) or larger, given a relay pumping evolution the length and size of the line and the desired flow and intake pressure, so that the correct pressure and flow are provided to the next pumper in the relay.

(A) Requisite Knowledge. Hydraulic calculations for friction loss and flow using both written formulas and estimation methods, safe operation of the pump, problems related to small-diameter or dead-end mains, low-pressure and private water supply systems, hydrant coding systems, and reliability of static sources.

(B) Requisite Skills. The ability to position a fire department pumper to operate at a fire hydrant and at a static water source, power transfer from vehicle engine to pump, draft, operate pumper pressure control systems, operate the volume/pressure transfer valve (multistage pumps only), operate auxiliary cooling systems, make the transition between internal and external water sources, and assemble hose lines, nozzles, valves, and appliances.

5.2.3 Produce a foam fire stream, given foam-producing equipment, so that properly proportioned foam is provided.

(A) Requisite Knowledge. Proportioning rates and concentrations, equipment assembly procedures, foam system limitations, and manufacturer's specifications.

(B) Requisite Skills. The ability to operate foam proportioning equipment and connect foam stream equipment.

5.2.4 Supply water to fire sprinkler and standpipe systems, given specific system information and a fire department pumper, so that water is supplied to the system at the correct volume and pressure.

(A) Requisite Knowledge. Calculation of pump discharge pressure; hose layouts; location of fire department connection; alternative supply procedures if fire department connection is not usable; operating principles of sprinkler systems as defined in NFPA 13, NFPA 13D, and NFPA 13R; fire department operations in sprinklered properties as defined in NFPA 13E; and operating principles of standpipe systems as defined in NFPA 14.

Copyright National Fire Protection Association
Provided by IHS under license with NFPA
No reproduction or networking permitted without license from IHS
Not for Resale

(B) Requisite Skills. The ability to position a fire department pumper to operate at a fire hydrant and at a static water source, power transfer from vehicle engine to pump, draft, operate pumper pressure control systems, operate the volume/pressure transfer valve (multistage pumps only), operate auxiliary cooling systems, make the transition between internal and external water sources, and assemble hose line, nozzles, valves, and appliances.

Chapter 6 Apparatus Equipped with an Aerial Device

6.1* General. The requirements of Fire Fighter I as specified in NFPA 1001, and the job performance requirements defined in Sections 6.1 and 6.2 shall be met prior to certification as a fire department driver/operator — aerial.

6.1.1 Perform the routine tests, inspections, and servicing functions specified in the following list in addition to those specified in 4.2.1, given a fire department aerial apparatus, so that the operational readiness of the aerial apparatus is verified:

(1) Cable systems (if applicable)
(2) Aerial device hydraulic systems
(3) Slides and rollers
(4) Stabilizing systems
(5) Aerial device safety systems
(6) Breathing air systems
(7) Communication systems

(A) Requisite Knowledge. Manufacturer's specifications and requirements, and policies and procedures of the jurisdiction.

(B) Requisite Skills. The ability to use hand tools, recognize system problems, and correct any deficiency noted according to policies and procedures.

6.2 Operations.

6.2.1 Maneuver and position an aerial apparatus, given an aerial apparatus, an incident location, a situation description, and an assignment, so that the apparatus is positioned for correct aerial device deployment.

(A) Requisite Knowledge. Capabilities and limitations of aerial devices related to reach, tip load, angle of inclination, and angle from chassis axis; effects of topography, ground, and weather conditions on deployment; and use of the aerial device.

(B) Requisite Skills. The ability to determine a correct position for the apparatus, maneuver apparatus into that position, and avoid obstacles to operations.

6.2.2 Stabilize an aerial apparatus, given a positioned vehicle and the manufacturer's recommendations, so that power can be transferred to the aerial device hydraulic system and the device can be deployed.

(A) Requisite Knowledge. Aerial apparatus hydraulic systems, manufacturer's specifications for stabilization, stabilization requirements, and effects of topography and ground conditions on stabilization.

(B) Requisite Skills. The ability to transfer power from the vehicle's engine to the hydraulic system and operate vehicle stabilization devices.

6.2.3 Maneuver and position the aerial device from each control station, given an incident location, a situation description, and an assignment, so that the aerial device is positioned to accomplish the assignment.

(A) Requisite Knowledge. Aerial device hydraulic systems, hydraulic pressure relief systems, gauges and controls, cable systems, communications systems, electrical systems, emergency operating systems, locking systems, manual rotation and lowering systems, stabilizing systems, aerial device safety systems, system overrides and the hazards of using overrides, safe operational limitations of the given aerial device, safety procedures specific to the device, and operations near electrical hazards and overhead obstructions.

(B) Requisite Skills. The ability to raise, rotate, extend, and position to a specified location, as well as lock, unlock, retract, lower, and bed the aerial device.

6.2.4 Lower an aerial device using the emergency operating system, given an aerial device, so that the aerial device is lowered to its bedded position.

(A) Requisite Knowledge. Aerial device hydraulic systems, hydraulic pressure relief systems, gauges and controls, cable systems, communications systems, electrical systems, emergency operating systems, locking systems, manual rotation and lowering systems, stabilizing systems, aerial device safety systems, system overrides and the hazards of using overrides, safe operational limitations of the given aerial device, safety procedures specific to the device, and operations near electrical hazards and overhead obstructions.

(B) Requisite Skills. The ability to rotate and position to center, unlock, retract, lower, and bed the aerial device using the emergency operating system.

6.2.5 Deploy and operate an elevated master stream, given an aerial device, a master stream device, and a desired flow so that the stream is effective and the aerial and master stream devices are operated correctly.

(A) Requisite Knowledge. Nozzle reaction, range of operation, and weight limitations.

(B) Requisite Skills. The ability to connect a water supply to a master stream device and control an elevated nozzle manually or remotely.

Chapter 7 Apparatus Equipped with a Tiller

7.1* General. The requirements of Fire Fighter I as specified in NFPA 1001, and the job performance requirements defined in Chapter 6 and Section 7.2 shall be met prior to certification as a fire department driver/operator — tiller.

7.2 Operations.

7.2.1* Perform the practical driving exercises specified in 4.3.2 through 4.3.5 from the tiller position, given a qualified driver, a fire department aerial apparatus equipped with a tiller, and a spotter for backing up, so that each exercise is performed without striking the vehicle or obstructions.

(A) Requisite Knowledge. Capabilities and limitations of tiller aerial devices related to reach, tip load, angle of inclination, and angle from chassis axis; effects of topography, ground, and weather conditions on safe deployment; and use of a tiller aerial device.

(B) Requisite Skills. The ability to determine a correct position for the tiller, maneuver the tiller into that position, and avoid obstacles to operations.

--`,,,-`-`,,`,,`,`,,`---
Copyright National Fire Protection Association
Provided by IHS under license with NFPA
No reproduction or networking permitted without license from IHS
Not for Resale

7.2.2 Operate a fire department aerial apparatus equipped with a tiller from the tiller position over a predetermined route on a public way, using the maneuvers specified in 4.3.1, given a qualified driver, a fire department aerial apparatus equipped with a tiller, and a spotter for backing up, so that the vehicle is operated in compliance with all applicable state and local laws, departmental rules and regulations, and the requirements of NFPA 1500, Section 4.2.

(A) Requisite Knowledge. Principles of tiller operation, methods of communication with the driver, the effects on vehicle control of general steering reactions, night driving, negotiating intersections, and manufacturer operation limitations.

(B) Requisite Skills. The ability to operate the communication system between the tiller operator's position and the driver's compartment; operate passenger restraint devices; maintain control of the tiller while accelerating, decelerating, and turning; operate the vehicle during nonemergency conditions; and operate under adverse environmental or driving surface conditions.

7.2.3 Position a fire department aerial apparatus equipped with a tiller from the tiller position, given the apparatus operating instructions, an incident location, a situation description, and an assignment, so that the aerial device is positioned and stabilized to accomplish the assignment.

(A) Requisite Knowledge. Principles of positioning and stabilizing the aerial apparatus from the tiller position.

(B) Requisite Skills. The ability to determine a correct position for the tiller, maneuver the tiller into that position, and avoid obstacles to operations.

Chapter 8 Wildland Fire Apparatus

8.1 General. The job performance requirements defined in Sections 8.1 and 8.2 shall be met prior to certification as a driver/operator — wildland fire apparatus.

8.1.1 Perform the routine tests, inspections, and servicing functions specified in the following list, in addition to those in 4.2.1, given a wildland fire apparatus and its manufacturer's specifications, so that the operational status is verified:

(1) Water tank and/or other extinguishing agent levels (if applicable)
(2) Pumping systems
(3) Foam systems

(A) Requisite Knowledge. Manufacturer's specifications and requirements, and policies and procedures of the jurisdiction.

(B) Requisite Skills. The ability to use hand tools, recognize system problems, and correct any deficiency noted according to policies and procedures.

8.1.2* Operate a wildland fire apparatus, given a predetermined route off of a public way that incorporates the maneuvers and features specified in the following list that the driver/operator is expected to encounter during normal operations, so that the vehicle is operated in compliance with all applicable departmental rules and regulations, the requirements of NFPA 1500, Section 6.2, and the design limitations of the vehicle:

(1) Loose or wet soil
(2) Steep grades (30 percent fore and aft)
(3) Limited sight distance
(4) Blind curve
(5) Vehicle clearance obstacles (height, width, undercarriage, angle of approach, angle of departure)
(6) Limited space for turnaround
(7) Side slopes (20 percent side to side)

(A) Requisite Knowledge. The effects on vehicle control of braking reaction time and load factors; effects of high center of gravity on roll-over potential, general steering reactions, speed, and centrifugal force; applicable laws and regulations; principles of skid avoidance, night driving, shifting, and gear patterns; negotiating intersections, railroad crossings, and bridges; weight and height limitations for both roads and bridges; identification and operation of automotive gauges; and operational limits.

(B) Requisite Skills. The ability to operate passenger restraint devices; maintain safe following distances; maintain control of the vehicle while accelerating, decelerating, and turning, given road, weather, and traffic conditions; operate during nonemergency conditions; operate under adverse environmental or driving surface conditions; and use automotive gauges and controls.

8.2 Operations.

8.2.1 Produce effective fire streams, utilizing the sources specified in the following list, so that the pump is engaged, all pressure-control and vehicle safety devices are set, the rated flow of the nozzle is achieved, and the apparatus is continuously monitored for potential problems:

(1) Water tank
(2)*Pressurized source
(3) Static source

(A) Requisite Knowledge. Hydraulic calculations for friction loss and flow using both written formulas and estimation methods, safe operation of the pump, correct apparatus placement, personal safety considerations, problems related to small-diameter or dead-end mains and low-pressure and private water supply systems, hydrant cooling systems, and reliability of static sources.

(B) Requisite Skills. The ability to position a wildland fire apparatus to operate at a fire hydrant and at a static water source, correctly place apparatus for fire attack, transfer power from vehicle engine to pump, draft, operate pumper pressure control systems, operate the volume/pressure transfer valve (multistage pumps only), operate auxiliary cooling systems, make the transition between internal and external water sources, and assemble hose lines, nozzles, valves, and appliances.

8.2.2 Pump a supply line, given a relay pumping evolution the length and size of the line and pumping flow and desired intake pressure, so that correct intake pressures and flow are provided to the next pumper in the relay.

(A) Requisite Knowledge. Hydraulic calculations for friction loss and flow using both written formulas and estimation methods, safe operation of the pump, problems related to small-diameter or dead-end main and low-pressure and private water supply systems, hydrant cooling systems, and reliability of static sources.

(B) Requisite Skills. The ability to position a wildland apparatus to operate at a fire hydrant and at a static water source, transfer power from vehicle engine to pump, draft, operate pumper pressure control systems, operate the volume/pressure transfer valve (multistage pumps only), operate auxiliary cooling systems, make the transition between internal and external water sources, and assemble hose lines, nozzles, valves, and appliances.

--`,,,-`-`,,`,,`,`,,`---
Copyright National Fire Protection Association
Provided by IHS under license with NFPA
No reproduction or networking permitted without license from IHS
Not for Resale

8.2.3 Produce a foam fire stream, given foam-producing equipment, so that the correct proportion of foam is provided.

(A) Requisite Knowledge. Proportioning rates and concentrations, equipment assembly procedures, foam systems limitations, and manufacturer's specifications.

(B) Requisite Skills. The ability to operate foam proportioning equipment and connect foam stream equipment.

Chapter 9 Aircraft Rescue and Fire-Fighting Apparatus

9.1* General. The requirements of Fire Fighter II as specified in NFPA 1001, the requirements of Airport Fire Fighter as specified in NFPA 1003, and the job performance requirements defined in Sections 9.1 and 9.2 shall be met prior to certification as a fire department driver/operator — aircraft rescue and fire-fighting (ARFF) apparatus.

9.1.1 Perform the routine tests, inspections, and servicing functions specified in the following list in addition to those in 4.2.1, given an ARFF vehicle and the manufacturer's servicing, testing, and inspection criteria, so that the operational status of the vehicle is verified:

(1)*Agent dispensing systems
(2)*Secondary extinguishing systems
(3) Vehicle-mounted breathing air systems

(A) Requisite Knowledge. Manufacturer's specifications and requirements, and policies and procedures of the jurisdiction.

(B) Requisite Skills. The ability to use hand tools, recognize system problems, and correct any deficiency noted according to policies and procedures.

• **9.1.2** Operate an ARFF vehicle, given a predetermined route on an airport that includes the maneuvers listed in 4.3.1, and operation in all aircraft movement areas, so that the vehicle is operated in compliance with all applicable federal, state/provincial, and local laws, departmental rules and regulations, and the requirements of NFPA 1500, Section 6.2.

(A) Requisite Knowledge. The effects on vehicle control of liquid surge, braking reaction time, and load factors; effects of high center of gravity on roll-over potential, general steering reactions, speed, and centrifugal force; applicable laws and regulations; principles of skid avoidance, night driving, shifting, and gear patterns; negotiating intersections, railroad crossings, and bridges; weight and height limitations for both roads and bridges; identification and operation of automotive gauges; operational limits; hazards of driving through smoke; control tower light signals; airfield markings; runway and taxiway designations; air and vehicle traffic patterns; and all aircraft movements areas.

(B) Requisite Skills. The ability to operate passenger restraint devices; maintain safe following distances; maintain control of the vehicle while accelerating, decelerating, and turning, given road, weather, and traffic conditions; operate under adverse environmental or driving surface conditions; and use automotive gauges and controls.

9.1.3* Operate an ARFF apparatus, given a predetermined route, off of an improved surface that incorporates the maneuvers and features specified in the following list that the driver/operator is expected to encounter during normal operations, so that the vehicle is operated in compliance with all applicable departmental rules and regulations, the requirements of NFPA 1500, Section 6.2, and the design limitations of the vehicle:

(1) Loose or wet soil
(2) Steep grades (30 percent fore and aft)
(3) Limited sight distance
(4) Vehicle clearance obstacles (height, width, undercarriage)
(5) Limited space for turnaround
(6) Side slopes (20 percent side to side)

(A) Requisite Knowledge. The effects on vehicle control of braking reaction time and load factors; effects of high center of gravity on roll-over potential, general steering reactions, speed, and centrifugal force; applicable laws and regulations; principles of skid avoidance, night driving, shifting, and gear patterns; negotiating intersections, railroad crossings, and bridges; weight and height limitations for both roads and bridges; identification and operation of automotive gauges; and operational limits.

(B) Requisite Skills. The ability to operate passenger restraint devices; maintain safe following distances; maintain control of the vehicle while accelerating, decelerating, and turning, given road, weather, and traffic conditions; operate during nonemergency conditions; operate under adverse environmental or driving surface conditions; and use automotive gauges and controls.

9.2 Operations.

9.2.1 Maneuver and position an ARFF vehicle, given an incident location and description that involves the largest aircraft that routinely uses the airport, so that the vehicle is positioned for correct operation at each operational position for the aircraft.

(A) Requisite Knowledge. Vehicle positioning for fire-fighting and rescue operations; capabilities and limitations of turret devices related to reach; and effects of topography, ground, and weather conditions on agent application, distribution rates, and density.

(B) Requisite Skills. The ability to determine a correct position for the apparatus, maneuver apparatus into that position, and avoid obstacles to operations.

9.2.2 Produce a fire stream while the vehicle is in both forward and reverse power modulation, given a discharge rate and intended target, so that the pump is engaged, the turrets are deployed, the agent is delivered to the intended target at the correct rate, and the apparatus is moved and continuously monitored for potential problems.

(A) Requisite Knowledge. Principles of agent management and application, effects of terrain and wind on agent application, turret capabilities and limitations, tower light signals, airport markings, aircraft recognition, aircraft danger areas, theoretical critical fire area and practical critical fire area, aircraft entry and egress points, and correct apparatus placement.

(B) Requisite Skills. The ability to provide power to the pump, determine a correct position for the apparatus, maneuver apparatus into that position, avoid obstacles to operations, apply agent, and determine the length of time an extinguishing agent will be available.

9.2.3 Produce a fire stream, given a rate of discharge and water supplied from the sources specified in the following list, so that the pump is engaged, the turrets are deployed, the agent is delivered to the intended target at the correct rate, and the apparatus is continuously monitored for potential problems:

(1) The internal tank
(2)*Pressurized source
(3) Static source

Copyright National Fire Protection Association
Provided by IHS under license with NFPA
No reproduction or networking permitted without license from IHS
Not for Resale

(A) Requisite Knowledge. Principles of agent management and application, effects of terrain and wind on agent application, turret capabilities and limitations, tower light signals, airport markings, aircraft recognition, aircraft danger areas, theoretical critical fire area and practical critical fire area, aircraft entry and egress points, and correct apparatus placement.

(B) Requisite Skills. The ability to provide power to the pump, determine a correct position for the apparatus, maneuver apparatus into that position, avoid obstacles to operations, apply agent, and determine the length of time an extinguishing agent will be available.

Chapter 10 Mobile Water Supply Apparatus

10.1* General. The requirements of Fire Fighter I as specified in NFPA 1001 and the job performance requirements defined in Sections 10.1 and 10.2 shall be met prior to certification as a fire department driver/operator — mobile water supply apparatus.

10.1.1 Perform routine tests, inspections, and servicing functions specified in the following list, in addition to those specified in 4.2.1, given a fire department mobile water supply apparatus, so that the operational readiness of the mobile water supply apparatus is verified:

(1) Water tank and other extinguishing agent levels (if applicable)
(2) Pumping system (if applicable)
(3) Rapid dump system (if applicable)
(4) Foam system (if applicable)

(A) Requisite Knowledge. Manufacturer's specifications and requirements, and policies and procedures of the jurisdiction.

(B) Requisite Skills. The ability to use hand tools, recognize system problems, and correct any deficiency noted according to policies and procedures.

10.2 Operations.

10.2.1* Maneuver and position a mobile water supply apparatus at a water shuttle fill site, given a fill site location and one or more supply hose, so that the apparatus is correctly positioned, supply hose are attached to the intake connections without having to stretch additional hose, and no objects are struck at the fill site.

(A) Requisite Knowledge. Local procedures for establishing a water shuttle fill site, method for marking the stopping position of the apparatus, and location of the water tank intakes on the apparatus.

(B) Requisite Skills. The ability to determine a correct position for the apparatus, maneuver apparatus into that position, and avoid obstacles to operations.

10.2.2* Maneuver and position a mobile water supply apparatus at a water shuttle dump site, given a dump site and a portable water tank, so that all of the water being discharged from the apparatus enters the portable tank and no objects are struck at the dump site.

(A) Requisite Knowledge. Local procedures for operating a water shuttle dump site and location of the water tank discharges on the apparatus.

(B) Requisite Skills. The ability to determine a correct position for the apparatus, maneuver apparatus into that position, avoid obstacles to operations, and operate the fire pump or rapid water dump system.

10.2.3* Establish a water shuttle dump site, given two or more portable water tanks, low-level strainers, water transfer equipment, fire hose, and a fire apparatus equipped with a fire pump, so that the tank being drafted from is kept full at all times, the tank being dumped into is emptied first, and the water is transferred efficiently from one tank to the next.

(A) Requisite Knowledge. Local procedures for establishing a water shuttle dump site and principles of water transfer between multiple portable water tanks.

(B) Requisite Skills. The ability to deploy portable water tanks, connect and operate water transfer equipment, and connect a strainer and suction hose to the fire pump.

Annex A Explanatory Material

Annex A is not a part of the requirements of this NFPA document but is included for informational purposes only. This annex contains explanatory material, numbered to correspond with the applicable text paragraphs.

A.1.2 The purpose of this standard is not to mandate that all fire apparatus driver/operators meet the requirements of all chapters of this standard. Personnel should meet only those provisions that pertain to the types of apparatus they will be expected to drive and operate.

A.1.4.2 Although the frequency of the medical evaluation is not specified, it is recommended that the medical evaluation be made on at least an annual basis.

A.1.4.3 It is the committee's intent that this standard be applied to all fire department vehicles. Drivers of vehicles not specifically addressed in Chapters 5 through 10 (e.g., staff or command vehicles, rescue or utility vehicles, and buses) are expected to meet the requirements of Chapter 4. Agencies operating unique or special vehicles (e.g., tractors, bulldozers, cranes, and graders) should develop job performance requirements and training programs for those vehicles.

A.1.4.10 It is recommended that evaluators be individuals who were not directly involved as instructors for the requirement being evaluated.

A.1.4.13 The maneuvers and features specified for this job performance requirement include driving situations that the committee has determined to be essential. The committee recognizes that each of these situations might not exist in all areas. Where this occurs, those specific requirements can be omitted. It should not be assumed that all these vehicles are wheel drive.

A.3.1 Action verbs used in the job performance requirements in this document are based on the first definition of the verb found in *Webster's Third New International Dictionary of the English Language.*

A.3.2.1 Approved. The National Fire Protection Association does not approve, inspect, or certify any installations, procedures, equipment, or materials; nor does it approve or evaluate testing laboratories. In determining the acceptability of installations, procedures, equipment, or materials, the authority having jurisdiction may base acceptance on compliance with NFPA or other appropriate standards. In the absence of

Copyright National Fire Protection Association
Provided by IHS under license with NFPA
No reproduction or networking permitted without license from IHS
Not for Resale

such standards, said authority may require evidence of proper installation, procedure, or use. The authority having jurisdiction may also refer to the listings or labeling practices of an organization that is concerned with product evaluations and is thus in a position to determine compliance with appropriate standards for the current production of listed items.

A.3.2.2 Authority Having Jurisdiction (AHJ). The phrase "authority having jurisdiction," or its acronym AHJ, is used in NFPA documents in a broad manner, since jurisdictions and approval agencies vary, as do their responsibilities. Where public safety is primary, the authority having jurisdiction may be a federal, state, local, or other regional department or individual such as a fire chief; fire marshal; chief of a fire prevention bureau, labor department, or health department; building official; electrical inspector; or others having statutory authority. For insurance purposes, an insurance inspection department, rating bureau, or other insurance company representative may be the authority having jurisdiction. In many circumstances, the property owner or his or her designated agent assumes the role of the authority having jurisdiction; at government installations, the commanding officer or departmental official may be the authority having jurisdiction.

A.3.3.25 Wildland Fire Apparatus. These vehicles are expected to operate on a wide variety of surfaces, including off-road. They are equipped with fixed or portable pumps used to supply attack lines; however, these pumps are generally of a capacity that does not put the vehicle into the classification of attack or fire pump.

A.4.2.1 Routine tests, inspections, and servicing functions should be performed on a daily, weekly, monthly, or other periodic basis as determined by departmental policy. The specifications provided by the manufacturer for these functions should be followed.

A.4.3.1 The maneuvers and features specified for this job performance requirement include driving situations that the committee has determined to be essential. The committee recognizes that each of these situations might not exist in all areas. Where this occurs, those specific requirements can be omitted.

A.4.3.2 The alley dock exercise can be used as practice for meeting or in the evaluation of this requirement. This exercise measures a driver's ability to drive past a simulated dock or stall, back the apparatus into the space provided, and stop smoothly. A dock or stall can be simulated by arranging barricades 12.2 m (40 ft) from a boundary line. These barricades should be 3.7 m (12 ft) apart, and the length should be approximately 6.1 m (20 ft). The driver should pass the barricades with the dock on the left and then back the apparatus, using a left turn, into the stall. The exercise should then be repeated with the dock on the right side, using a right turn. *[See Figure A.4.3.2(a).]*

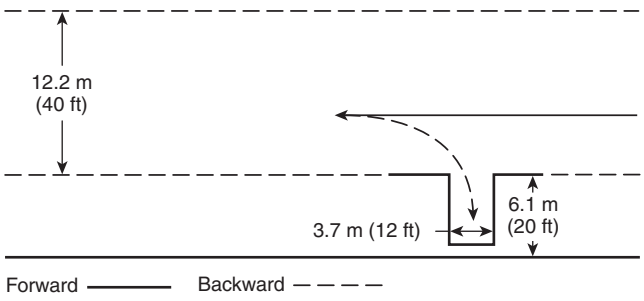

FIGURE A.4.3.2(a) Alley Dock Exercise.

The apparatus station parking maneuver can also be used as practice for meeting or in the evaluation of this requirement. This exercise measures the driver's ability to back the apparatus into a fire station to park or to back the apparatus down a street to reverse the direction of travel. An engine bay can be simulated by allowing for a 6.1-m (20-ft) minimum setback from a street 9 m (30 ft) wide, with a set of barricades at the end of the setback, spaced 3.7 m (12 ft) apart to simulate the garage door. The setback from the street should be determined by the testing agency to ensure that the distances reflect those encountered by the apparatus driver during the normal course of duties. A marker placed on the ground should indicate to the operator the proper position of the left front tire of the vehicle once stopped and parked. A straight line can be provided to assist the operator while backing the apparatus, facilitating the use of vehicle mirrors. The minimum depth distance is determined by the total length of the vehicle. *[See Figure A.4.3.2(b).]*

Note that for large vehicles, such as ARFF apparatus, this course might need to be modified.

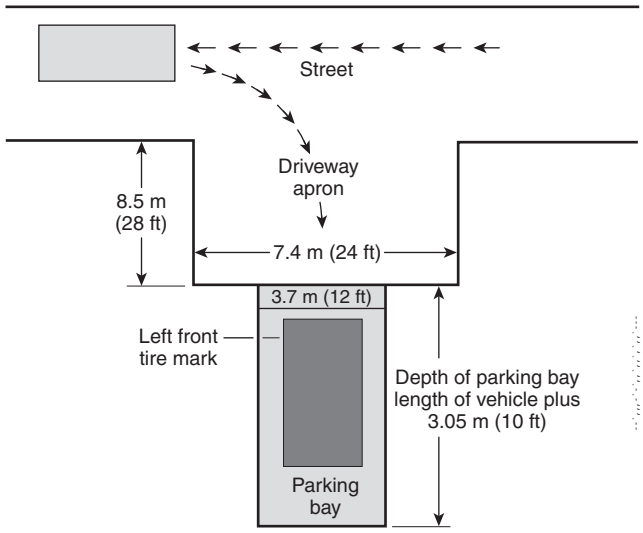

FIGURE A.4.3.2(b) Station Parking Procedure Drill.

A.4.3.3 The serpentine exercise can be used as practice for meeting or in the evaluation of this requirement. This exercise measures a driver's ability to steer the apparatus in close limits without stopping. The exercise should be conducted with the apparatus moving first backward, then forward. The course or path of travel for this exercise can be established by placing a minimum of three markers, each spaced between 9 m (30 ft) and 12 m (38 ft) apart, in a line. The spacing of the markers should be based on the wheel base of the vehicle used. Adequate space must be provided on each side of the markers for the apparatus to move freely. The driver should drive the apparatus along the left side of the markers in a straight line and stop just beyond the last marker. The driver then should begin the exercise by backing the apparatus between the markers by passing to the left of marker No. 1, to the right of marker No. 2, and to the left of marker No. 3. At this point, the driver should stop the vehicle and then drive it forward between the markers by passing to the right of marker No. 3, to the left of marker No. 2, and to the right of marker No. 1. *(See Figure A.4.3.3.)*

Copyright National Fire Protection Association
Provided by IHS under license with NFPA
No reproduction or networking permitted without license from IHS
Not for Resale

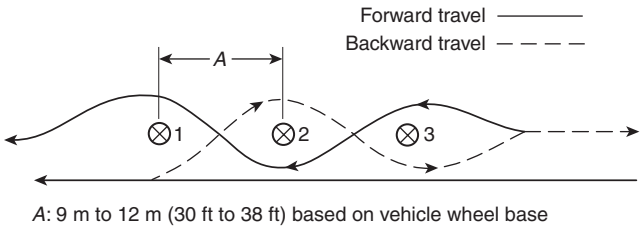

FIGURE A.4.3.3 Serpentine Exercise.

Note that for large vehicles, such as ARFF apparatus, this course might need to be modified.

A.4.3.4 The confined space turnaround can be used as practice for meeting or in the evaluation of this requirement. This exercise measures the driver's ability to turn the vehicle around in a confined space without striking obstacles. The turn is accomplished within an area 15.24 m × 30.5 m (50 ft × 100 ft). The driver moves into the area from a 3.7-m (12-ft) opening in the center of one of the 15.24-m (50-ft) legs, turns the vehicle 180 degrees, and returns through the opening. There is no limitation on the number of times the driver has to maneuver the vehicle to accomplish this exercise, but no portion of the vehicle should extend over the boundary lines of the space. *(See Figure A.4.3.4.)*

Note that for large vehicles, such as ARFF apparatus, this course might need to be modified.

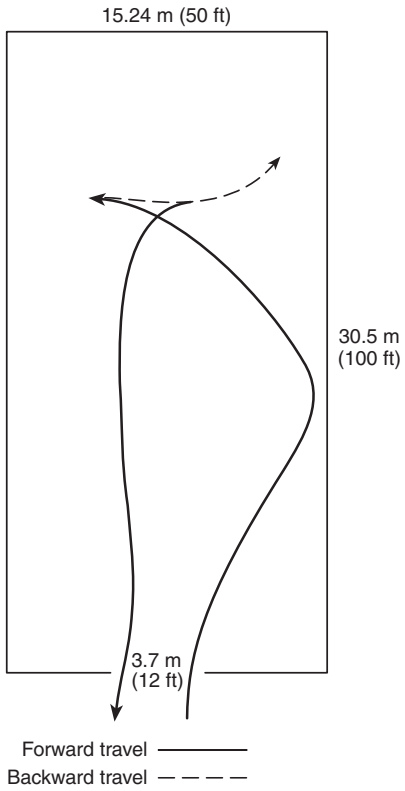

FIGURE A.4.3.4 Confined Space Turnaround.

A.4.3.5 The diminishing clearance exercise can be used as practice for meeting or in the evaluation of this requirement. This exercise measures a driver's ability to steer the apparatus in a straight line, to judge distances from wheel to object, and to stop at a finish line. The speed at which a driver should operate the apparatus is optional, but it should be great enough to necessitate quick judgment. This exercise is to be performed both forward and in reverse with a spotter. The course for this exercise is created by arranging two rows of markers to form a lane 22.9 m (75 ft) long. The lane varies in width from 2.9 m (9 ft 6 in.) to a diminishing clearance of 2.5 m (8 ft 2 in.). The driver should maneuver the apparatus through this lane without touching the markers. The vehicle should be stopped at a finish line 15.24 m (50 ft) beyond the last marker. No portion of the vehicle should protrude beyond this line. Vertical clearance judgment should be evaluated using a prop with a crossbar that is adjustable, based on the vehicle height. During the evaluation, the driver should drive forward and back through the prop with the crossbar at several differing heights, including one that is lower than the top of the vehicle. The prop should not be struck. The intent of the vertical clearance judgment is for proper identification of the furthermost point in the form of the apparatus. In situations where the apparatus is gaining entry to roadways or limited-height areas, the driver/operator must allow appropriate space ahead of the apparatus in order to avoid striking objects or to avoid extending apparatus into traffic lanes. *(See Figure A.4.3.5.)*

Note that for large vehicles, such as ARFF apparatus, this course might need to be modified.

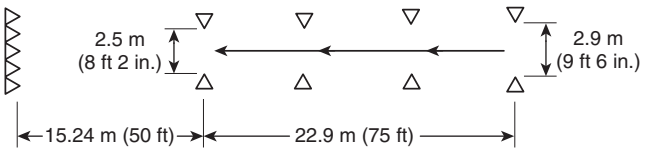

FIGURE A.4.3.5 Diminishing Clearance Exercise.

A.4.3.6 Emergency driving simulation should be restricted to a driving track or similar controlled area. Emergency driver training should not be conducted on public ways. For more information, see 49 CFR 383.

A.4.3.7 The committee's intent for this job performance requirement is for the driver/operator to be able to operate all major equipment and mechanical systems that are attached to the apparatus, other than those specifically covered in Chapters 5 through 10 of this standard. These types of equipment and systems include, but are not limited to, electric generation equipment, floodlighting systems, air compressors, air cascade systems, hydraulic rescue tool systems, power reels for air or hydraulic hose, cranes and stabilizers, and A-frames or other lifting equipment.

A.5.1 The requirements of Chapter 5 specify that the candidate shall meet the requirements of Fire Fighter I as specified in NFPA 1001, before certification as a fire apparatus driver/operator. This means that the individual applying for certification as a fire apparatus driver/operator has met all of the objectives in Chapters 1, 4, and 5 of NFPA 1001. These objectives include further requirements in areas such as fire hose, nozzles, and appliances; fire streams; water supplies; and sprinklers.

--`,,`-`-`,,`,,`,`,,`---

Copyright National Fire Protection Association
Provided by IHS under license with NFPA
No reproduction or networking permitted without license from IHS
Not for Resale

These requirements are in addition to the requirements of this standard. Any fire fighter who has already been certified as a Fire Fighter I should review the requirements of the referenced chapters of NFPA 1001, as the candidate can be tested on the requirements included therein.

A.5.2.1(2) Pressurized sources include the following:

(1) Connection to a hydrant
(2) Supply line from another pumping source

A.6.1 The requirements of Chapter 6 specify that the candidate shall meet the requirements of Fire Fighter I as specified in NFPA 1001, before certification as a fire apparatus driver/operator. This means that the individual applying for certification as a fire apparatus driver/operator has met all of the objectives in Chapters 1, 4, and 5 of NFPA 1001. These objectives include further requirements in areas such as fire hose, nozzles, and appliances; fire streams; water supplies; and sprinklers. These requirements are in addition to the requirements of this standard. Any fire fighter who has already been certified as a Fire Fighter I should review the requirements of the referenced chapters of NFPA 1001, as the candidate can be tested on the requirements included therein.

A.7.1 The requirements of Chapter 7 specify that the candidate shall meet the requirements of Fire Fighter I as specified in NFPA 1001, before certification as a fire apparatus driver/operator. This means that the individual applying for certification as a fire apparatus driver/operator has met all of the objectives in Chapters 1, 4, and 5 of NFPA 1001. These objectives include further requirements in areas such as fire hose, nozzles, and appliances; fire streams; water supplies; and sprinklers. These requirements are in addition to the requirements of this standard. Any fire fighter who has already been certified as a Fire Fighter I should review the requirements of the referenced chapters of NFPA 1001, as the candidate can be tested on the requirements included therein.

A.7.2.1 See A.4.3.3 through A.4.3.5.

A.8.1.2 The maneuvers and features specified for this job performance requirement include driving situations that the committee has determined to be essential. The committee recognizes that each of these situations might not exist in all areas. Where this occurs, those specific requirements can be omitted.

A.8.2.1(2) Pressurized sources include the following:

(1) Connection to a hydrant
(2) Supply line from another pumping source

A.9.1 The requirements of Chapter 9 specify that the candidate shall meet the requirements of Fire Fighter II as specified in NFPA 1001, before certification as a fire apparatus driver/operator. This means that the individual applying for certification as a fire apparatus driver/operator has met all of the objectives in Chapters 1, 4, and 5 of NFPA 1001. These objectives include further requirements in areas such as fire hose, nozzles, and appliances; fire streams; water supplies; and sprinklers. These requirements are in addition to the requirements of this standard. Any fire fighter who has already been certified as a Fire Fighter II should review the requirements of the referenced chapters of NFPA 1001, as the candidate can be tested on the requirements included therein.

A.9.1.1(1) An agent dispensing system is the primary fire suppression agent carried on ARFF vehicles and usually is aqueous film-forming foam (AFFF).

A.9.1.1(2) A secondary extinguishing system is a separate system, totally independent of the primary system. It includes Halon 1211 (its future replacement), dry chemical, and other such systems used for specific types of aircraft-associated fires.

A.9.1.3 The maneuvers and features specified for this job performance requirement include driving situations that the committee has determined to be essential. The committee recognizes that each of these situations might not exist in all areas. Where this occurs, those specific requirements can be omitted.

A.9.2.3(2) Pressurized sources include the following:

(1) Connection to a hydrant
(2) Supply line from another pumping source

A.10.1 The requirements of Chapter 10 specify that the candidate shall meet the requirements of Fire Fighter I as specified in NFPA 1001, before certification as a fire apparatus driver/operator. This means that the individual applying for certification as a fire apparatus driver/operator has met all of the objectives in Chapters 1, 4, and 5 of NFPA 1001. These objectives include further requirements in areas such as fire hose, nozzles, and appliances; fire streams; water supplies; and sprinklers. These requirements are in addition to the requirements of this standard. Any fire fighter who has already been certified as a Fire Fighter I should review the requirements of the referenced chapters of NFPA 1001, as the candidate can be tested on the requirements included therein.

A.10.2.1 The intent of this requirement is for the driver/operator to be able to quickly and efficiently position the vehicle at a water shuttle fill site that has been established prior to the vehicle's arrival. Most commonly a fire department pumper will connect to a water supply source and lay hose out that can be quickly attached to the mobile water supply apparatus once it arrives at the fill site. If the jurisdiction operates its fill site operations in a different manner, this requirement might need to be adjusted accordingly.

A.10.2.2 The intent of this requirement is for the driver/operator to be able to quickly and efficiently position the vehicle at a water shuttle dump site that has been established prior to the vehicle's arrival. The dump site will typically consist of one or more portable tanks that have been deployed on the ground. A fire department pumper drafts water from the portable tanks for use on the incident. The mobile water supply apparatus' function is to quickly dump their load into the portable tank and return to the fill site for another load. Depending on the design of the mobile water supply apparatus, one of three methods can be used to discharge water into the portable water tank. These methods include pumping the water off, using a gravity dump, or using a jet-assisted gravity dump. Depending on the design of the apparatus, water can be discharged from the front, rear, or either side of the vehicle.

A.10.2.3 A proper dump site involves the use of two or more portable tanks that are connected by a series of water transfer equipment. The water transfer equipment can be supplied by hoselines from the pumper that is supplying the fire scene or a second pumper placed at the drafting tank for the sole purpose of transferring water between the tanks. The goal is to keep the tank from which water is being drafted full at all times and the tank from which water is being dumped empty. This will ensure that mobile water supply apparatus that arrive at the dump site can unload their water and return for more in the shortest time possible.

Copyright National Fire Protection Association
Provided by IHS under license with NFPA
No reproduction or networking permitted without license from IHS
Not for Resale

Annex B Job Performance Requirements

This annex is not a part of the requirements of this NFPA document but is included for informational purposes only.

B.1 Explanation of the Standard and Concepts of Job Performance Requirements (JPRs). The primary benefit of establishing national professional qualification standards is to provide both public and private sectors with a framework of the job requirements for the fire service. Other benefits include enhancement of the profession, individual as well as organizational growth and development, and standardization of practices.

NFPA professional qualification standards identify the minimum JPRs for specific fire service positions. The standards can be used for training design and evaluation, certification, measuring and critiquing on-the-job performance, defining hiring practices, and setting organizational policies, procedures, and goals. (Other applications are encouraged.)

Professional qualification standards for a specific job are organized by major areas of responsibility defined as duties. For example, the fire fighter's duties might include fire suppression, rescue, and water supply; the public fire educator's duties might include education, planning and development, and administration. Duties are major functional areas of responsibility within a job.

The professional qualifications standards are written as JPRs. JPRs describe the performance required for a specific job. JPRs are grouped according to the duties of a job. The complete list of JPRs for each duty defines what an individual must be able to do in order to successfully perform that duty. Together, the duties and their JPRs define the job parameters; that is, the standard as a whole is a job description.

B.2 Breaking Down the Components of a JPR. The JPR is the assembly of three critical components. *(See Table B.2.)* These components are as follows:

(1) Task that is to be performed
(2) Tools, equipment, or materials that must be provided to successfully complete the task
(3) Evaluation parameters and/or performance outcomes

B.2.1 The Task to be Performed. The first component is a concise, brief statement of what the person is supposed to do.

Table B.2 Example of a JPR

(1) Task	(1) Establish a water shuttle dump site
(2) Tools, equipment, or materials	(2) Given two or more portable water tanks, low-level strainers, water transfer equipment, fire hose, and a fire apparatus equipped with a water pump
(3) Evaluation parameters and performance outcomes	(3) So that the tank being drafted from is kept full at all times, the tank being dumped into is emptied first, and water is transferred efficiently from one tank to the next

B.2.2 Tools, Equipment, or Materials that Must be Provided to Successfully Complete the Task. This component ensures that all individuals completing the task are given the same minimal tools, equipment, or materials when being evaluated. By listing these items, the performer and evaluator know what must be provided in order to complete the task.

B.2.3 Evaluation Parameters and/or Performance Outcomes. This component defines how well one must perform each task — for both the performer and the evaluator. The JPR guides performance toward successful completion by identifying evaluation parameters and/or performance outcomes. This portion of the JPR promotes consistency in evaluation by reducing the variables used to gauge performance.

In addition to these three components, the JPR contains requisite knowledge and skills. Just as the term *requisite* suggests, these are the necessary knowledge and skills one must have to be able to perform the task. Requisite knowledge and skills are the foundation for task performance.

Once the components and requisites are put together, the JPR might read as follows.

B.2.3.1 Example: Establish a water shuttle dump site, given two or more portable water tanks, low-level strainers, water transfer equipment, fire hose, and a fire apparatus equipped with a fire pump, so that the tank being drafted from is kept full at all times, the tank being dumped into is emptied first, and water is transferred efficiently from one tank to the next.

(A) Requisite Knowledge. Local procedures for establishing a water shuttle dump site and principles of water transfer between multiple portable water tanks.

(B) Requisite Skills. The ability to deploy portable water tanks, connect and operate water transfer equipment, and connect a strainer and suction hose to the fire pump.

B.3 Examples of Potential Uses.

B.3.1 Certification. JPRs can be used to establish the evaluation criteria for certification at a specific job level. When used for certification, evaluation must be based on the successful completion of JPRs.

First, the evaluator would verify the attainment of requisite knowledge and skills prior to JPR evaluation. This might be through documentation review or testing.

Next, the candidate would be evaluated on completing the JPRs. The candidate would perform the task and be evaluated based on the evaluation parameters and/or performance outcomes. This performance-based evaluation can be either practical (for psychomotor skills such as "ventilate a roof") or written (for cognitive skills such as "interpret burn patterns").

Note that psychomotor skills are those physical skills that can be demonstrated or observed. Cognitive skills (or mental skills) cannot be observed but are evaluated on how one completes the task (process-oriented) or on the task outcome (product-oriented).

Using the previous example, a practical performance-based evaluation would measure the ability to "establish a water shuttle dump site." The candidate passes this particular evaluation if the standard was met — that is, the tank being drafted from is kept full at all times, the tank being dumped into is emptied first, and water is transferred efficiently from one tank to another.

It is important to remember that when a candidate is being evaluated, he or she must be given the tools, equipment, or materials listed in the JPRs (e.g., a portable tank, a low-level strainer, fire hose, and a fire apparatus equipped with a water pump) before he or she can be properly evaluated.

Copyright National Fire Protection Association
Provided by IHS under license with NFPA
No reproduction or networking permitted without license from IHS
Not for Resale

B.3.2 Curriculum Development/Training Design and Evaluation. The statements contained in this document that refer to job performance were designed and written as JPRs. While a resemblance to instructional objectives might be present, these statements should not be used in a teaching situation until after they have been modified for instructional use.

JPRs state the behaviors required to perform specific skill(s) on the job as opposed to a learning situation. These statements should be converted into instructional objectives with behaviors, conditions, and standards that can be measured within the teaching/learning environment. A JPR that requires a driver/operator to "establish a water shuttle dump site" should be converted into a measurable instructional objective for use when teaching the skill. *[See Figure B.3.2(a).]*

In the previous example, the JPR requiring a driver/operator to establish a water shuttle dump site should be converted into a measurable instructional objective for use when teaching the task. Using the example, a terminal instructional objective might read as follows.

The candidate will establish a water shuttle dump site, given two or more portable water tanks, low-level strainers, water transfer equipment, fire hose, and a fire apparatus equipped with a fire pump, so that 100 percent accuracy is attained on a skills checklist. (At a minimum, the skills checklist should include each of the measurement criteria from the JPR.)

Figure B.3.2(b) is a sample checklist for use in evaluating this objective.

While the differences between job performance requirements and instructional objectives are subtle in appearance, the purpose of each statement differs greatly. JPRs state what is necessary to perform the job in the "real world." Instructional objectives, however, are used to identify what students must do at the end of a training session and are stated in behavioral terms that are measurable in the training environment.

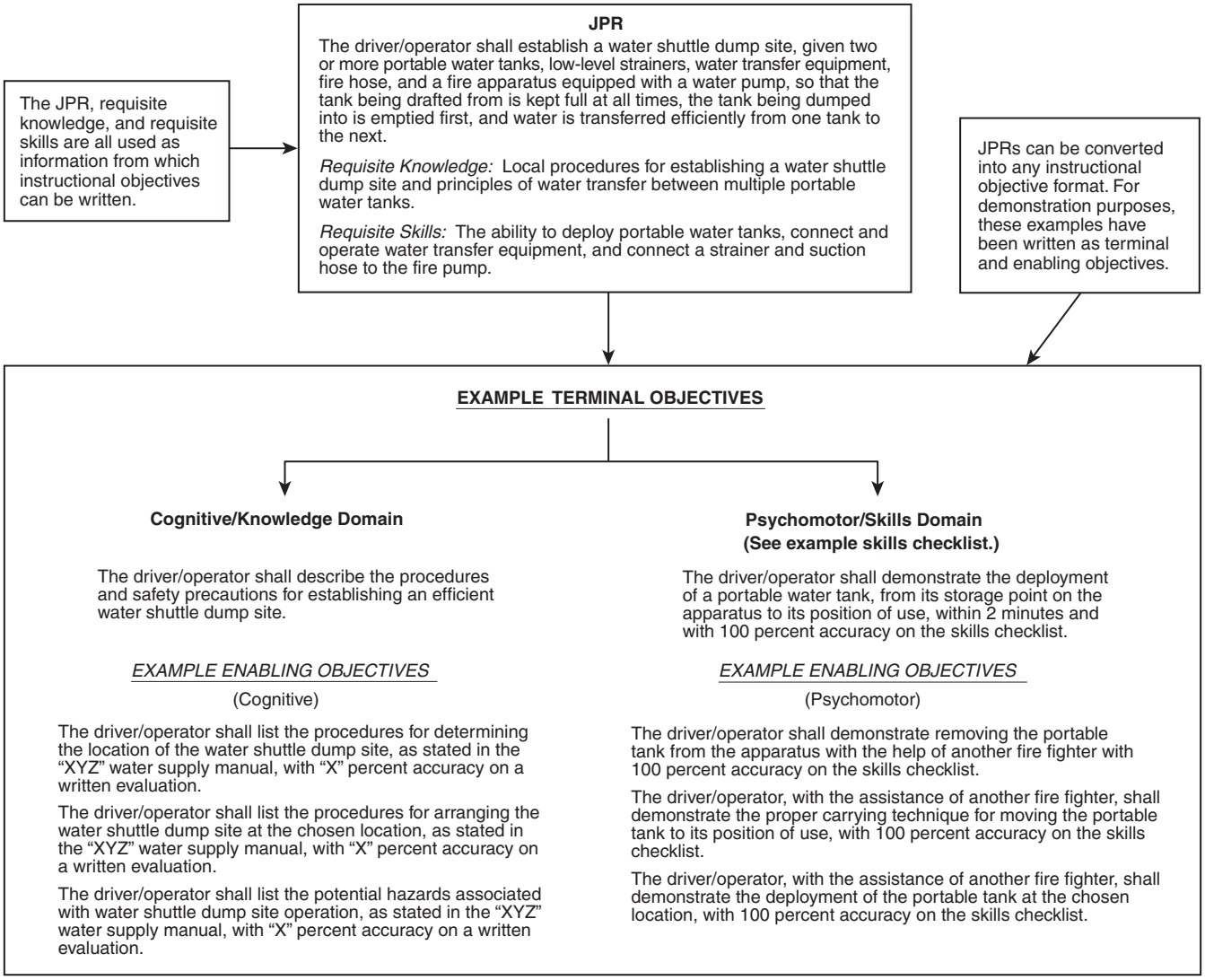

FIGURE B.3.2(a) Converting JPRs into Instructional Objectives.

Copyright National Fire Protection Association
Provided by IHS under license with NFPA
No reproduction or networking permitted without license from IHS
Not for Resale

OBJECTIVE: The driver/operator shall demonstrate the deployment of a portable water tank, from its storage point on the apparatus to its position of use, within 2 minutes and with 100 percent accuracy on the skills checklist.

YES	NO	
❑	❑	1. The tank was swiftly removed from its mounting on the apparatus.
❑	❑	2. Proper lifting and carrying techniques were used to remove and carry the portable tank.
❑	❑	3. The tank was placed at the proper location for deployment.
❑	❑	4. A tarp or salvage cover was spread on the ground before the tank was opened.
❑	❑	5. The tank was open on the cover and facing the proper direction.
❑	❑	6. The task was completed within 2 minutes.

FIGURE B.3.2(b) Skills Checklist.

By converting JPRs into instructional objectives, instructors will be able to clarify performance expectations and avoid confusion related to using statements designed for purposes other than teaching. Additionally, instructors will be able to add local/state/regional elements of performance into the standards as intended by the developers.

Requisite skills and knowledge should be converted into enabling objectives. The enabling objectives help to define the course content. The course content should include the requisite knowledge and skills. Using Figure B.3.2(b) as an example, the enabling objectives are local procedures for establishing a water shuttle dump site, principles of water transfer between multiple portable water tanks, connection and operation of water transfer equipment, and so forth. These enabling objectives ensure that the course content supports the terminal objective.

Note that it is assumed that the reader is familiar with curriculum development or training design and evaluation.

B.4 Other Uses. While the professional qualifications standards are principally used to guide the development of training and certification programs, there are a number of other potential uses for the documents. Because the documents are written using JPR terms, they lend themselves well to any area of the profession where a level of performance or expertise must be determined.

These areas might include the following:

(1) *Employee Evaluation/Performance Critiquing.* The JPRs can be used as a guide by both the supervisor and the employee during an evaluation. The JPRs for a specific job define tasks that are essential to perform on the job as well as the evaluation criteria to measure when those tasks are completed.

(2) *Establishing Hiring Criteria.* The professional qualifications standards can be used in a number of ways to further the establishment of hiring criteria. The AHJ could simply require certification at a specific job level (e.g., driver/operator — pumps). The JPRs could also be used as the basis for pre-employment screening by establishing essential minimal tasks and the related evaluation criteria. An added benefit is that individuals interested in employment can work toward the minimal hiring criteria at local colleges.

(3) *Employee Development.* The professional qualifications standards can be useful to both the employee and the employer in developing a plan for an individual's growth within an organization. The JPRs and the associated requisite knowledge and skills can be used as a guide to determine additional training and education required for the employee to master the job or profession.

(4) *Succession Planning.* Succession planning or career pathing addresses the efficient placement of people into jobs in response to current needs and anticipated future needs. A career development path can be established for targeted individuals to prepare them for growth within an organization. The JPRs and requisite knowledge and skills could then be used to develop an educational path to aid in the individual's advancement within the organization or profession.

(5) *Establishing Organizational Policies, Procedures, and Goals.* The JPRs can be incorporated into organizational policies, procedures, and goals where employee performance is addressed.

Annex C Informational References

C.1 Referenced Publications. The following documents or portions thereof are referenced within this standard for informational purposes only and are thus not part of the requirements of this document unless also listed in Chapter 2.

C.1.1 NFPA Publication. National Fire Protection Association, 1 Batterymarch Park, P.O. Box 9101, Quincy, MA 02269-9101.

NFPA 1001, *Standard for Fire Fighter Professional Qualifications*, 2002 edition.

C.1.2 Other Publications.

C.1.2.1 U.S. Government Publication. U.S. Government Printing Office, Washington, DC 20402.

Title 49, Code of Federal Regulations, Part 383, "Commercial Driver's License Standards: Requirements and Penalties," 383.110:29.

C.1.2.2 Other Publication.

Webster's Third New International Dictionary of the English Language.

C.2 Informational References. The following documents or portions thereof are listed here as informational resources only. They are not a part of the requirements of this document. The following is a bibliography for Annex B.

Boyatzis, R. E., *The Competent Manager: A Model For Effective Performance.* New York: John Wiley & Sons, 1982.

Castle, D. K., "Management Design: A Competency Approach to Create Exemplar Performers." *Performance and Instruction* 28: 1989; 42–48.

Cetron, M., and O'Toole, T., *Encounters with the Future: A Forecast into the 21st Century.* New York: McGraw Hill, 1983.

Elkin, G., "Competency-Based Human Resource Development: Making Sense of the Ideas." *Industrial & Commercial Training* 22: 1990; 20–25.

Furnham, A., "The Question of Competency." *Personnel Management* 22: 1990; 37.

Gilley, J. W., and Eggland, S. A., *Principles of Human Resource Development.* Reading, MA: Addison-Wesley, 1989.

Copyright National Fire Protection Association
Provided by IHS under license with NFPA
No reproduction or networking permitted without license from IHS
Not for Resale

Hooton, J., *Job Performance = Tasks + Competency × Future Forces.* Unpublished manuscript, Vanderbilt University, Peabody College, Nashville, TN, 1990.

McLagan, P. A., "Models for HRD Practice." *Training & Development Journal.* Reprinted, 1989.

McLagan, P. A., and Suhadolnik, D., *The Research Report.* Alexandria, VA: American Society for Training and Development, 1989.

Nadler, L., "HRD on the Spaceship Earth." *Training and Development Journal,* October 1983; 19–22.

Nadler, L., *The Handbook of Human Resource Development.* New York: Wiley-Interscience, 1984.

Naisbitt, J., *Megatrends.* Chicago: Nightingale-Conant, 1984.

Spellman, B. P., "Future Competencies of the Educational Public Relations Specialist" (Doctoral dissertation, University of Houston, 1987). *Dissertation Abstracts International* 49: 1987; 02A.

Springer, J., *Job Performance Standards and Measures.* A series of research presentations and discussions for the ASTD Second Annual Invitational Research Seminar, Savannah, GA (November 5–8, 1979). Madison, WI: American Society for Training and Development, 1980.

Tracey, W. R., *Designing Training and Development Systems.* New York: AMACOM, 1984.

C.3 References for Extracts. The following documents are listed here to provide reference information, including title and edition, for extracts given throughout this standard as indicated by a reference in brackets [ ] following a section or paragraph. These documents are not a part of the requirements of this document unless also listed in Chapter 2 for other reasons.

NFPA 1000, *Standard for Fire Service Professional Qualifications Accreditation and Certification Systems*, 2000 edition.

NFPA 1031, *Standard for Professional Qualifications for Fire Inspector and Plan Examiner*, 2003 edition.

NFPA 1710, *Standard for the Organization and Deployment of Fire Suppression Operations, Emergency Medical Operations, and Special Operations to the Public by Career Fire Departments*, 2001 edition.

NFPA 1901, *Standard for Automotive Fire Apparatus*, 2003 edition.

NFPA 1906, *Standard for Wildland Fire Apparatus*, 2001 edition.

Copyright National Fire Protection Association
Provided by IHS under license with NFPA
No reproduction or networking permitted without license from IHS
Not for Resale

Index

© 2003 National Fire Protection Association. All Rights Reserved.

The copyright in this index is separate and distinct from the copyright in the document that it indexes. The licensing provisions set forth for the document are not applicable to this index. This index may not be reproduced in whole or in part by any means without the express written permission of NFPA.

-A-

Aerial apparatus ..... *see also* Aerial operators; Tiller operators
Definition 3.3.1
With tillers (definition) 3.3.23
Aerial devices 1.4.5, 6.2.3, 6.2.4
Definition 3.3.2
Aerial operators ..... 1.4.5, Chap. 6; *see also* Tiller operators
Definition 3.3.3
Equipment operation skills 6.2
Fire Fighter I requirements 6.1, A.6.1
Preventive maintenance skills 6.1.1
Aircraft rescue and fire-fighting (ARFF) vehicle operators ..... 1.4.8, Chap. 9
Driving/operating skills 9.1.2, 9.1.3, 9.2.1, A.9.1.3
Equipment operation skills 9.2, A.9.2
Fire Fighter I requirements 9.1, A.9.1
Preventive maintenance skills ..... 9.1.1, A.9.1.1(1), A.9.1.1(2)
Aircraft rescue and fire-fighting (ARFF) vehicle (definition) 3.3.4
Angle of approach (definition) 3.3.5
Angle of departure (definition) 3.3.6
Approved (definition) 3.2.1, A.3.2.1
Authority having jurisdiction
Definition 3.2.2, A.3.2.2
Job performance requirements, evaluation of 1.4.10, A.1.4.10

-D-

Definitions ..... Chap. 3
Driving/operating skills
Aircraft rescue and fire-fighting (ARFF) vehicle operators 9.1.2, 9.1.3, 9.2.1, A.9.1.3
Exercises to practice/test 1.4.12
Fire apparatus drivers ..... 4.3, A.4.3.1 to A.4.3.7
Mobile water supply apparatus ... 10.2.1, 10.2.2, A.10.2.1, A.10.2.2
Tiller operators 7.2.1, 7.2.2, A.7.2.1
Wildland fire apparatus operators 8.1.2, A.8.1.2

-E-

Emergency driving simulation 4.3.6, A.4.3.6
Equipment operation skills
Aerial operators 6.2
Aircraft rescue and fire-fighting (ARFF) vehicle operators 9.2, A.9.2
Fire apparatus drivers 4.3.7, A.4.3.7
Mobile water supply apparatus 10.2, A.10.2.1
Pump operators 5.2, A.5.2.1
Tiller operators 7.2.3
Wildland fire apparatus operators 8.2, A.8.2.1
Evaluation
Of job performance requirements 1.4.10, A.1.4.10, B.4
Medical 1.4.2, A.1.4.2

-F-

Fire apparatus (definition) 3.3.7
Fire apparatus drivers 1.4.3, 4.1, A.1.4.3
Definition 3.3.8
Driving/operating skills ..... 4.3, A.4.3.1 to A.4.3.7
Equipment operation skills 4.3.7, A.4.3.7
Preventive maintenance skills 4.2, A.4.2.1
Fire department (definition) 3.3.9
Fire department pumper (definition) ..... 3.3.10; *see also* Pump operators
Fire department vehicles 4.1
Definition 3.3.11
Drivers/operators ..... *see* Fire apparatus drivers
Fire pumps ..... *see also* Pump operators
Definition 3.3.12
Water supply sources 5.2.1, 8.2.1, 9.2.3, A.5.2.1, A.8.2.1
Foam systems
Aircraft rescue and fire-fighting (ARFF) apparatus ..... 9.1.1, 9.2.2(A), 9.2.2(B), 9.2.3(A), 9.2.3(B), A.9.1.1(1), A.9.1.1(2)
Definition 3.3.13
Pumper apparatus 5.2.3
Wildland fire apparatus 8.2.3

-G-

General requirements ..... 1.4, Chap. 4, A.1.4

-J-

Job performance requirements (JPRs) ..... Annex B; *see also* Driving/operating skills; Equipment operation skills; Off-road use; Preventive maintenance skills
Concept of B.1
Curriculum development/training design B.4
Definition 3.3.14
Evaluation 1.4.10, A.1.4.10, B.4
Potential uses of B.3, B.5
Standard and components B.2

-L-

Licensing of drivers/operators 1.4.1
Liquid surge (definition) 3.3.15

-M-

Master streams 5.2.1, 6.2.5
Medical evaluation of drivers/operators 1.4.2, A.1.4.2
Minimum requirements, exceeding 1.3
Mobile water supply apparatus (definition) 3.3.16
Mobile water supply apparatus operators ..... 1.4.9, Chap. 10
Driving/operating skills 10.2.1, 10.2.2, A.10.2.1, A.10.2.2
Equipment operation skills 10.2, A.10.2.1
Fire Fighter I requirements 10.1, A.10.1
Preventive maintenance skills 10.1.1

-O-

Off-road use 1.4.13, A.1.4.13
Airport rescue and fire-fighting (ARFF) vehicles 9.1.3, A.9.1.3
Definition 3.3.17
Wildland fire apparatus 8.1.2, A.8.1.2

-P-

Preventive maintenance skills
Aerial operators 6.1.1
Aircraft rescue and fire-fighting (ARFF) vehicle operators ..... 9.1.1, A.9.1.1(1), A.9.1.1(2)
Fire apparatus drivers 4.2, A.4.2.1
Mobile water supply apparatus operators 10.1.1

Copyright National Fire Protection Association
Provided by IHS under license with NFPA
No reproduction or networking permitted without license from IHS
Not for Resale

Pump operators 5.1.1
Wildland fire apparatus operators 8.1.1
Pumping system (definition) 3.3.19
Pump operators ..... 1.4.4, Chap. 5
Definition 3.3.18
Equipment operation skills 5.2, A.5.2.1
Fire Fighter I requirements 5.1, A.5.1
Preventive maintenance skills 5.1.1
Purpose of standard 1.2, A.1.2

-R-

References ..... Chap. 2, Annex C
Requisite knowledge (definition) 3.3.20
Requisite skills (definition) 3.3.21

-S-

Scope of standard 1.1
Shall (definition) 3.2.3
Sprinkler operation skills 5.2.4
Standard (definition) 3.2.4
Standpipe operation skills 5.2.4

-T-

Task (definition) 3.3.22
Tiller aerial apparatus (definition) 3.3.23
Tiller operators ..... 1.4.6, Chap. 7
Definition 3.3.24
Driving/operating skills 7.2.1, 7.2.2, A.7.2.1
Equipment operation skills 7.2.3
Fire Fighter I requirements 7.1, A.7.1
Training 1.4.11, B.4

-W-

Water supply
Mobile water supply apparatus ..... *see* Mobile water supply apparatus
Pumps, sources for 5.2.1, 8.2.1, 9.2.3
Pressurized 5.2.1, 8.2.1, 9.2.3, A.5.2.1, A.8.2.1, A.9.2
Sprinkler and standpipe systems 5.2.4
Wildland fire apparatus (definition) 3.3.25, A.3.3.25
Wildland fire apparatus operators ..... 1.4.7, Chap. 8
Driving/operating skills 8.1.2, A.8.1.2
Equipment operation skills 8.2, A.8.2.1
Preventive maintenance skills 8.1.1

Copyright National Fire Protection Association
Provided by IHS under license with NFPA
No reproduction or networking permitted without license from IHS
Not for Resale

Sequence of Events Leading to Publication of an NFPA Committee Document

Call goes out for proposals to amend existing document or for recommendations on new document.

▼

Committee meets to act on proposals, to develop its own proposals, and to prepare its report.

▼

Committee votes on proposals by letter ballot. If two-thirds approve, report goes forward. Lacking two-thirds approval, report returns to committee.

▼

Report — *Report on Proposals* (ROP) — is published for public review and comment.

▼

Committee meets to act on each public comment received.

▼

Committee votes on comments by letter ballot. If two-thirds approve, supplementary report goes forward. Lacking two-thirds approval, supplementary report returns to committee.

▼

Supplementary report — *Report on Comments* (ROC) — is published for public review.

▼

NFPA membership meets (Annual or Fall Meeting) and acts on committee report (ROP or ROC).

▼

Committee votes on any amendments to report approved at NFPA Annual or Fall Meeting.

▼

Appeals to Standards Council on Association action must be filed within 20 days of the NFPA Annual or Fall Meeting.

▼

Standards Council decides, based on all evidence, whether or not to issue standard or to take other action, including upholding any appeals.

Committee Membership Classifications

The following classifications apply to Technical Committee members and represent their principal interest in the activity of the committee.

M *Manufacturer:* A representative of a maker or marketer of a product, assembly, or system, or portion thereof, that is affected by the standard.

U *User:* A representative of an entity that is subject to the provisions of the standard or that voluntarily uses the standard.

I/M *Installer/Maintainer:* A representative of an entity that is in the business of installing or maintaining a product, assembly, or system affected by the standard.

L *Labor:* A labor representative or employee concerned with safety in the workplace.

R/T *Applied Research/Testing Laboratory:* A representative of an independent testing laboratory or independent applied research organization that promulgates and/or enforces standards.

E *Enforcing Authority:* A representative of an agency or an organization that promulgates and/or enforces standards.

I *Insurance:* A representative of an insurance company, broker, agent, bureau, or inspection agency.

C *Consumer:* A person who is, or represents, the ultimate purchaser of a product, system, or service affected by the standard, but who is not included in the *User* classification.

SE *Special Expert:* A person not representing any of the previous classifications, but who has a special expertise in the scope of the standard or portion thereof.

NOTES:

1. "Standard" connotes code, standard, recommended practice, or guide.
2. A representative includes an employee.
3. While these classifications will be used by the Standards Council to achieve a balance for Technical Committees, the Standards Council may determine that new classifications of members or unique interests need representation in order to foster the best possible committee deliberations on any project. In this connection, the Standards Council may make such appointments as it seems appropriate in the public interest, such as the classification of "Utilities" in the National Electrical Code Committee.
4. Representatives of subsidiaries of any group are generally considered to have the same classification as the parent organization.

Copyright National Fire Protection Association
Provided by IHS under license with NFPA
No reproduction or networking permitted without license from IHS
Not for Resale

NFPA Technical Committee Document Proposal Form

Note: All proposals must be received by 5:00 p.m. EST/EDST on the published proposal closing date.

For further information on the standards-making process, please contact Codes and Standards Administration at 617-984-7249. For technical assistance, please call NFPA at 617-770-3000.

FOR OFFICE USE ONLY
Log #: _____
Date Rec'd: _____

Please indicate in which format you wish to receive your ROP/ROC: ☐ **CD ROM** ☐ **paper** ☐ **download**
(Note: In choosing the download option you intend to view the ROP/ROC from our Website. No copy will be sent to you.)

Date 12/18/02 **Name** John B. Smith **Telephone** 617-555-1212
Company _____
Address 9 Seattle St. **City** Seattle **State** WA **Zip** 02255
Please indicate organization represented (if any) Fire Marshals Assn. of North America

1. **a) NFPA Document Title** National Fire Alarm Code
   b) NFPA No. & Edition NFPA 72, 2002 ed. **c) Section/Paragraph** 4.4.7.1.1

2. **Proposal Recommends:** *(check one)* ☐ **new text** ☐ **revised text** ☒ **deleted text**

3. **Proposal.** *(Include proposed new or revised wording, or identification of wording to be deleted.)* Note: Proposed text should be in legislative format, that is, use underscore to denote wording to be inserted (inserted wording) and strike-through to denote wording to be deleted (~~deleted wording~~). Delete exception.

4. **Statement of Problem and Substantiation for Proposal.** Note: State the problem that will be resolved by your recommendation. Give the specific reason for your proposal including copies of tests, research papers, fire experience, etc. If more than 200 words, it may be abstracted for publication. A properly installed and maintained system should be free of ground faults. The occurrence of one or more ground faults should be required to cause a "trouble" signal because it indicates a condition that could contribute to future malfunction of the system. Ground fault protection has been widely available on these systems for years and its cost is negligible. Requiring it on all systems will promote better installations, maintenance and reliability.

5. ☒ **This Proposal is Original Material.** Note: Original material is considered to be the submitter's own idea based on or as a result of his/her own experience, thought, or research and, to the best of his/her knowledge, is not copied from another source.

   ☐ **This Proposal is Not Original Material; Its Source** ***(if known)*** **is as Follows:** _____

Sample

I hereby grant the NFPA all and full rights in copyright to this proposal, and I understand that I acquire no rights in any publication of NFPA in which this proposal in this or another similar or analogous form is used.

Signature ***(Required)*** John B. Smith

PLEASE USE SEPARATE FORM FOR EACH PROPOSAL • NFPA FAX (617) 770-3500

Mail to: Secretary, Standards Council • NFPA • 1 Batterymarch Park • PO Box 9101 • Quincy, MA 02269-9101

--`,,,-`-`,,`,,`,`,,`---

Copyright National Fire Protection Association
Provided by IHS under license with NFPA
No reproduction or networking permitted without license from IHS

Not for Resale

NFPA Technical Committee Document Proposal Form

Note: All proposals must be received by 5:00 p.m. EST/EDST on the published proposal closing date.

For further information on the standards-making process, please contact Codes and Standards Administration at 617-984-7249. For technical assistance, please call NFPA at 617-770-3000.

FOR OFFICE USE ONLY
Log #: _____
Date Rec'd: _____

Please indicate in which format you wish to receive your ROP/ROC: ☐ **CD ROM** ☐ **paper** ☐ **download**
(Note: In choosing the download option you intend to view the ROP/ROC from our Website. No copy will be sent to you.)

Date _____ **Name** _____ **Telephone** _____
Company _____
Address _____ **City** _____ **State** _____ **Zip** _____
Please indicate organization represented (if any) _____

1. **a) NFPA Document Title** _____
   b) NFPA No. & Edition _____ **c) Section/Paragraph** _____

2. **Proposal Recommends:** *(check one)* ☐ **new text** ☐ **revised text** ☐ **deleted text**

3. **Proposal.** *(Include proposed new or revised wording, or identification of wording to be deleted.)* Note: Proposed text should be in legislative format, that is, use underscore to denote wording to be inserted (inserted wording) and strike-through to denote wording to be deleted (~~deleted wording~~). _____

4. **Statement of Problem and Substantiation for Proposal.** Note: State the problem that will be resolved by your recommendation. Give the specific reason for your proposal including copies of tests, research papers, fire experience, etc. If more than 200 words, it may be abstracted for publication. _____

5. ☐ **This Proposal is Original Material.** Note: Original material is considered to be the submitter's own idea based on or as a result of his/her own experience, thought, or research and, to the best of his/her knowledge, is not copied from another source.

   ☐ **This Proposal is Not Original Material; Its Source *(if known)* is as Follows:** _____

I hereby grant the NFPA all and full rights in copyright to this proposal, and I understand that I acquire no rights in any publication of NFPA in which this proposal in this or another similar or analogous form is used.

Signature *(Required)* _____

PLEASE USE SEPARATE FORM FOR EACH PROPOSAL • NFPA FAX (617) 770-3500

Mail to: Secretary, Standards Council • NFPA • 1 Batterymarch Park • PO Box 9101 • Quincy, MA 02269-9101

--`,,,-`-`,,`,,`,`,,`---

Copyright National Fire Protection Association
Provided by IHS under license with NFPA
No reproduction or networking permitted without license from IHS

Not for Resale