XR 8-79 6470247 0005663 8

F-87-03

STANDARDS PUBLICATION / NO. XR 8-1979

nema

test methods for diagnostic X-ray machines for use during initial installation

NEMA

NATIONAL ELECTRICAL MANUFACTURERS ASSOCIATION ■ 2101 L STREET N.W., WASHINGTON, D.C. 20037

Copyright National Electrical Manufacturers Association
Provided by IHS under license with NEMA
No reproduction or networking permitted without license from IHS
Not for Resale

TABLE OF CONTENTS

		Page
	FOREWORD	i
	Radiation and Mechanical-electrical Warnings	i
	PURPOSE	ii
	Bureau of Radiological Health Requirements	ii
	SCOPE	iii
Part 1	DEFINITIONS	1
Part 2	TEST METHODS	
	2.01 General	1
	2.02 Visual Inspection	1
	2.03 Visual and Audible Indicators	1
	2.04 kVp Accuracy	2
	2.05 mA Accuracy	4
	2.06 Timer Accuracy	5
	2.07 mAs Accuracy	8
	2.08 Reproducibility and Linearity of the X-ray System Output	9
	2.09 Beam Quality (Half-value Layer [HVL])	14
	2.10 Exposure Lockout With Variable Filtration	18
	2.11 Minimum Exposure Time for Automatic Exposure Controls	20
	2.12 Maximum mAs for Automatic Exposure Controls	21
	2.13 Actual Versus Indicated Source-to-image Distance (SID)	23
	2.14 Visual Definition (Radiographic) of X-ray Light Field	24
	2.15 Intensity of Light Field Illumination	31
	2.16 Minimum Field Size	31
	2.17 X-ray Field/Receptor Center Alignment	32
	2.18 Indication of X-ray Field Size	33
	2.19 Positive-beam Limitation (PBL)	33
	2.20 X-ray Field Limitation and Alignment	34
	2.21 Return to Positive-beam Limitation With Image Receptor Change	35
	2.22 Key Lock to Positive-beam Limitation Override	35
	2.23 Field Limitation for One Image Receptor Size	35
	2.24 Fluoroscopic X-ray Field Limitation	36
	2.25 Fluoroscopic Source-to-skin Distance (SSD)	40
	2.26 Entrance Exposure Rate	43
	2.27 Primary Barrier—X-ray Lockout	46
	2.28 Fluoroscopic Primary Barrier Leakage	46
	2.29 Alignment of X-ray Field Edges to Selected Portions of the Image Receptor	48
	2.30 Alignment of Center of X-ray Field to Center of Selected Portion of Image Receptor	49
	2.31 Standby Radiation from Capacitor Discharge (CD) Equipment	51
	2.32 X-ray Field Size for Mammography Units	51
	2.33 Transmission of Primary Beam Through Image Receptor Support	52
Appendix A	REFERENCED PUBLICATIONS	A-1

© 1979 by National Electrical Manufacturers Association

Copyright National Electrical Manufacturers Association
Provided by IHS under license with NEMA
No reproduction or networking permitted without license from IHS
Not for Resale

TEST METHODS FOR DIAGNOSTIC X-RAY MACHINES FOR USE DURING INITIAL INSTALLATION

Foreword

User needs have been considered in the development of this publication.

These standards have been prepared by the X-ray Imaging Products Section of NEMA which periodically reviews them for any revisions necessary to keep them up to date with advancing technology. Comments or proposed revisions are welcomed and should be submitted to:

Manager, Engineering Department
National Electrical Manufacturers Association
2101 L Street, N.W.
Washington, D.C. 20037

RADIATION ☢ AND MECHANICAL-ELECTRICAL ϟ WARNINGS

Certain procedures contained in this publication are accompanied by radiation or electrical warning symbols, or both. The procedures accompanied by these symbols carry the following warnings:

RADIATION ☢ WARNING FOR DIAGNOSTIC X-RAY SYSTEMS

X-RAYS ARE DANGEROUS TO BOTH OPERATOR AND OTHERS IN THE VICINITY UNLESS ESTABLISHED SAFE EXPOSURE PROCEDURES ARE STRICTLY OBSERVED.

THE USEFUL AND SCATTERED BEAMS CAN PRODUCE SERIOUS, GENETIC OR POTENTIALLY FATAL BODILY INJURIES TO ANY PERSONS IN THE SURROUNDING AREA IF USED BY AN UNSKILLED OPERATOR. ADEQUATE PRECAUTIONS MUST ALWAYS BE TAKEN TO AVOID EXPOSURE TO THE USEFUL BEAM, AS WELL AS TO LEAKAGE RADIATION FROM WITHIN THE SOURCE HOUSING OR TO SCATTERED RADIATION RESULTING FROM THE PASSAGE OF RADIATION THROUGH MATTER.

THOSE AUTHORIZED TO OPERATE, TEST, PARTICIPATE IN OR SUPERVISE THE OPERATION OF THE EQUIPMENT MUST BE THOROUGHLY FAMILIAR AND COMPLY COMPLETELY WITH THE CURRENTLY ESTABLISHED SAFE EXPOSURE FACTORS AND PROCEDURES DESCRIBED IN PUBLICATIONS SUCH AS SUBCHAPTER J OF TITLE 21 OF THE CODE OF FEDERAL REGULATIONS, "DIAGNOSTIC X-RAY SYSTEMS AND THEIR MAJOR COMPONENTS," AND THE NATIONAL COUNCIL ON RADIATION PROTECTION (NCRP) NO. 33 "MEDICAL X-RAY AND GAMMA-RAY PROTECTION FOR ENERGIES UP TO 10 MeV-EQUIPMENT DESIGN AND USE," AS REVISED OR REPLACED IN THE FUTURE.

FAILURE TO OBSERVE THESE WARNINGS MAY CAUSE SERIOUS, GENETIC OR POTENTIALLY FATAL BODILY INJURIES TO THE OPERATOR OR THOSE IN THE AREA.

MECHANICAL-ELECTRICAL ϟ WARNING FOR DIAGNOSTIC X-RAY SYSTEMS

ALL OF THE MOVABLE ASSEMBLIES AND PARTS OF X-RAY EQUIPMENT SHOULD BE OPERATED WITH CARE.

ONLY PROPERLY TRAINED AND QUALIFIED PERSONNEL SHOULD BE PERMITTED ACCESS TO ANY INTERNAL PARTS. LIVE ELECTRICAL TERMINALS ARE DEADLY; BE SURE LINE DISCONNECT SWITCHES ARE OPENED AND OTHER APPROPRIATE PRECAUTIONS ARE TAKEN BEFORE OPENING ACCESS DOORS, REMOVING ENCLOSURE PANELS, OR ATTACHING ACCESSORIES.

DO NOT REMOVE THE FLEXIBLE HIGH TENSION CABLES FROM THE X-RAY TUBE HOUSING OR HIGH TENSION GENERATOR OR THE ACCESS COVERS FROM THE GENERATOR UNTIL THE MAIN AND AUXILIARY POWER SUPPLIES HAVE BEEN DISCONNECTED.

WHEN DISCONNECTING HIGH-VOLTAGE CABLES, THEY MUST BE GROUNDED IMMEDIATELY IN ORDER TO DISSIPATE ANY ELECTRICAL CHARGE THAT MAY REMAIN ON THE CABLES OR THE TUBE.

FAILURE TO COMPLY WITH THE FOREGOING MAY RESULT IN SERIOUS OR POTENTIALLY FATAL BODILY INJURIES TO THE OPERATOR OR THOSE IN THE AREA.

Copyright National Electrical Manufacturers Association
Provided by IHS under license with NEMA
No reproduction or networking permitted without license from IHS

Not for Resale

Purpose

This standards publication describes an installation quality assurance test program for diagnostic X-ray equipment excluding computed tomography and dental X-ray equipment. A series of tests are prescribed that, when performed at the time of installation, will indicate compliance with 21 CFR Subchapter J, Part 1020, Performance Standards for Ionizing Radiation Emitting Products. For each compliance item, there may be a variety of test methods described. Which method is used will depend on the tester's experience, availability of equipment, time, variety of design in X-ray components, and specifications of the individual manufacturers. These standards identify methods which may need to be supplemented by specific manufacturer's procedures and equipment that are not intended to be part of these standards. Any reference to tolerances on compliance items are referenced directly from 21 CFR Subchapter J regulations. They do not take into account inaccuracies brought about by the test equipment, instrumentation, or the human element. These factors must be considered when these tests are performed and the compliance of the equipment is being determined. The mention of commercial products, their sources or their use in connection with the material reported herein is not intended to be construed as either an actual or implied endorsement of such products.

BUREAU OF RADIOLOGICAL HEALTH REQUIREMENTS

Test Procedure or Requirement	Applicable Paragraph	Radiographic Systems	Radiographic and Fluoroscopic System	Mobile Radiographic System	Mobile Fluoroscopic System	Dedicated Mammographic System
Required Documents	2.02.01	X	X	X	X	X
Required Labels	2.02.02	X	X	X	X	X
Visual and Audible Indicators	2.03	X	X	X	X	X
kVp Accuracy	2.04	X	X	X	X	X
mA Accuracy	2.05	X	X	X	X	X
Timer Accuracy	2.06	X	X	X	8	X
mAs Accuracy	2.07	X	X	X	8	X
Reproducibility (Coefficient of Variation) and Linearity (Coefficient of Linearity)	2.08	X	X	X	8	X
Beam Quality (Half-value Layer [HVL])	2.09	X	X	X	X	X
Exposure Lockout With Variable Filtration	2.10	9	9	9	9	9
Minimum Exposure Time for Automatic Exposure Controls	2.11	1	1	1	1 8	1
Maximum mAs for Automatic Exposure Controls	2.12	1	1	1	1 8	1
Actual vs. Indicated SID	2.13	4	4	NA	NA	4
Visual Definition of X-ray Light Field	2.14	2	2	2	NA	2
Intensity of Light Field Illumination	2.15	3	3	3	NA	3
Minimum Field Size	2.16	2 4	2 4 8	2	2 8	2
X-ray Field / Receptor Center Alignment	2.17	X	X	NA	NA	NA
Indication of X-ray Field Size	2.18	X	X	X	NA	X
Positive Beam Limitation (PBL)	2.19	5	5	NA	NA	NA
X-ray Field Limitation and Alignment	2.20	X	X	NA	8	NA
Return to PBL With Image Receptor Change	2.21	5	5	NA	NA	NA
Key Lock PBL Override	2.22	5	5	NA	NA	NA
Field Limitation for One Image Receptor Size	2.23	7	NA	NA	NA	NA
Fluoroscopic X-ray Field Limitation	2.24	NA	X	NA	X	NA
Fluoroscopic SSD	2.25	NA	X	NA	NA	NA
Entrance Exposure Rate	2.26	NA	X	NA	X	NA
Primary Barrier X-ray Lockout	2.27	NA	X	NA	NA	NA
Fluoroscopic Primary Barrier Leakage	2.28	NA	X	NA	X	NA
Alignment of X-ray Field Edges to Selected Portions of Image Receptor	2.29	NA	8	NA	NA	NA
Alignment of Center of X-ray Field to Center of Selected Portion of Image Receptor	2.30	NA	8	NA	NA	NA
Standby Radiation from Capacitor Discharge Units	2.31	6	6	6	NA	6
X-ray Field Size for Mammography Units	2.32	NA	NA	NA	NA	X
Transmission of Primary Beam Through Image Receptor Support	2.33	NA	NA	NA	NA	X

1. Where system includes automatic exposure control (AEC) capability.
2. Where system includes a variable aperture beam limiting device.
3. Where system includes a light field for X-ray field definition.
4. Systems having variable source-to-image distance (SID) capability.
5. Systems having positive beam limitation (PBL) capability.
6. Capacitor discharge systems only.
7. Systems designed for one image receptor size and fixed SID.
8. Systems with spot-film capability.
9. Systems designed with variable filtration.

X Test or requirement applies.
N/A Not applicable.

Copyright National Electrical Manufacturers Association
Provided by IHS under license with NEMA
No reproduction or networking permitted without license from IHS
Not for Resale

Scope

This standards publication prescribes test methods which will result in the verification of compliance items specified in the Regulations for the Administration and Enforcement of the Radiation Control for Health and Safety Act of 1968.

Copyright National Electrical Manufacturers Association
Provided by IHS under license with NEMA
No reproduction or networking permitted without license from IHS

Not for Resale

Part 1

DEFINITIONS

XR 8-1.01 ACCESSIBLE SURFACE

An accessible surface is the external surface of the enclosure or housing provided by the manufacturer.

NEMA Standard 5-15-1979.

XR 8-1.02 ALUMINUM EQUIVALENT

Aluminum equivalent is the thickness of aluminum (type 1100 alloy) affording the same attenuation, under specified conditions, as the material in question.

NEMA Standard 5-15-1979.

XR 8-1.03 ASSEMBLER

An assembler is any person engaged in the business of assembling, replacing, or installing one or more components into an X-ray system or subsystem.

NEMA Standard 5-15-1979.

XR 8-1.04 ATTENUATION BLOCK

An attenuation block is a block or stack, having dimensions 20 centimeters by 20 centimeters by 3.8 centimeters, of type 1100 aluminum alloy or aluminum alloy having equivalent attenuation.

NEMA Standard 5-15-1979.

XR 8-1.05 AUTOMATIC EXPOSURE CONTROL

An automatic exposure control is a device which automatically controls one or more technique factors in order to obtain at a preselected location(s) a required quantity of radiation.

NEMA Standard 5-15-1979.

XR 8-1.06 BEAM AXIS

A beam axis is a line from the source through the centers of the X-ray fields.

NEMA Standard 5-15-1979.

XR 8-1.07 BEAM-LIMITING DEVICE

A beam-limiting device is a device which provides a means to restrict the dimensions of the X-ray field.

NEMA Standard 5-15-1979.

XR 8-1.08 COEFFICIENT OF VARIATION

Coefficient of variation is the ratio of the standard deviation to the mean value of a population of observations. In this context, it is used to assure compliance of reproducibility.

NEMA Standard 5-15-1979.

XR 8-1.09 CONTROL PANEL

A control panel is that part of the X-ray control upon which are mounted the switches, knobs, pushbuttons, and other hardware necessary for manually setting the technique factors.

NEMA Standard 5-15-1979.

XR 8-1.10 COOLING CURVE

A cooling curve is the graphical relationship between heat units stored and cooling time.

NEMA Standard 5-15-1979.

XR 8-1.11 DIAGNOSTIC SOURCE ASSEMBLY

A diagnostic source assembly is the tube housing assembly with a beam-limiting device attached.

NEMA Standard 5-15-1979.

XR 8-1.12 DIAGNOSTIC X-RAY SYSTEM

A diagnostic X-ray system is an X-ray system designed for irradiation of any part of the human body for the purpose of diagnosis or visualization.

NEMA Standard 5-15-1979.

XR 8-1.13 EQUIPMENT

Equipment means X-ray equipment.

NEMA Standard 5-15-1979.

XR 8-1.14 EXPOSURE

Exposure is the production of radiation dependent on the preselected values of technique factors, i.e., kV, mA, and time.

NEMA Standard 5-15-1979.

XR 8-1.15 EXPOSURE RATE

Exposure rate is the exposure per a given unit of time.

NEMA Standard 5-15-1979.

XR 8-1.16 FIELD EMISSION EQUIPMENT

Field emission equipment is equipment which uses an X-ray tube in which electron emission is due solely to the action of an electric field.

NEMA Standard 5-15-1979.

Copyright National Electrical Manufacturers Association
Provided by IHS under license with NEMA
No reproduction or networking permitted without license from IHS
Not for Resale

PROBLEM HARD COPY

XR 8-1.17 FLUOROSCOPIC IMAGING ASSEMBLY

A fluoroscopic imaging assembly is a component which transforms X-rays into a visible image (image intensifier, fluorescent screen, etc.). It includes equipment housings, electrical interlocks, if any, material placed in the useful beam to reduce the radiation exposure for protection purposes, and mechanical system used to support and connect X-ray tube and image receptor.

NEMA Standard 5-15-1979.

XR 8-1.18 GENERAL-PURPOSE X-RAY SYSTEM

A general-purpose X-ray system is any radiographic X-ray system which by design is not limited to a radiographic examination of a specified anatomical region.

NEMA Standard 5-15-1979.

XR 8-1.19 HALF-VALUE LAYER (HVL)

Half-value layer is the thickness of a specified material required to decrease the exposure rate of a beam of X-rays to one-half its initial value.

NEMA Standard 5-15-1979.

XR 8-1.20 IMAGE RECEPTOR

An image receptor is any device, such as fluorescent screen, image intensifier input phosphor, or radiographic film, which transforms X-rays into a visible image.

NEMA Standard 5-15-1979.

XR 8-1.21 LEAKAGE RADIATION

Leakage radiation is any radiation originating from the diagnostic source assembly (see par. XR 8-1.11) except for:

1. Useful beam.
2. Radiation produced when the exposure switch or timer is not energized (capacitor discharge units only).

NEMA Standard 5-15-1979.

XR 8-1.22 LEAKAGE TECHNIQUE FACTORS

Leakage technique factors are the technique factors associated with the tube housing Assembly which are used in measuring leakage radiation. They are defined as follows:

1. *For capacitor energy storage equipment*—the maximum rated number of exposures in an hour for operation at the maximum rated peak tube potential with the quantity of charge per exposure being 10 millicoulombs (mAs) or the minimum obtainable from the unit, whichever is larger.

2. *For field emission equipment rated for pulsed operation*—the maximum rated numbers of X-ray pulses in an hour for operation at the maximum rated peak tube potential.

3. *For all other equipment*—the maximum rated continuous tube current for the maximum rated peak tube potential.

NEMA Standard 5-15-1979.

XR 8-1.23 LIGHT FIELD

The light field is the area illuminated by the light localizer to define the X-ray field.

NEMA Standard 5-15-1979.

XR 8-1.24 LINE-VOLTAGE REGULATION

Line-voltage regulation is the difference between the no-load and the load line voltages expressed as a percent of the load line voltage:

$$\text{percent line voltage regulation} = \frac{100\ V_n - V_l}{V_l}$$

where: V_n = no-load line voltage

V_l = load line voltage

NEMA Standard 5-15-1979.

XR 8-1.25 PEAK TUBE POTENTIAL

Peak tube potential is the maximum value of the potential difference across the X-ray tube during an exposure.

NEMA Standard 5-15-1979.

XR 8-1.26 PRIMARY PROTECTIVE BARRIER

The primary protective barrier is the material, excluding filters, placed in the useful beam to reduce the radiation exposure for protection purposes.

NEMA Standard 5-15-1979.

XR 8-1.27 RATING

The rating is the operating limits specified by the manufacturer.

NEMA Standard 5-15-1979.

XR 8-1.28 RECORDING

Recording means producing a permanent form of an image resulting from X-ray photons (e.g., film, video tape).

NEMA Standard 5-15-1979.

XR 8-1.29 RESPONSE TIME, INSTRUMENT

Instrument response time is the time required after an abrupt change has occurred in the measured quantity to a new constant value until the pointer, or indicating means, has first come to apparent rest in its new position.

Copyright National Electrical Manufacturers Association
Provided by IHS under license with NEMA
No reproduction or networking permitted without license from IHS
Not for Resale

PROBLEM HARD COPY

Since, in some instruments, the response time depends on the magnitude of the deflection, a value corresponding to an initial deflection from zero to end scale is used in determining response time for rating purposes.

The pointer is at apparent rest when it remains within a range of either side of its final position equal to one-half the accuracy rating, when determined as specified above.

NEMA Standard 5-15-1979.

XR 8-1.30 SOURCE

The source is the focal spot of the X-ray tube.

NEMA Standard 5-15-1979.

XR 8-1.31 STATIONARY EQUIPMENT

Stationary equipment is equipment installed in a fixed location.

NEMA Standard 5-15-1979.

XR 8-1.32 TECHNIQUE FACTORS

Technique factors are conditions of operation, as follow:

1. *For capacity energy storage equipment*—kV and mAs.

2. *For field emission equipment rated for pulsed operation*—kV and number of X-ray pulses.

3. *For all other equipment*—peak tube potential in kV, and either tube current in mA and exposure time in seconds, or the product of tube current and exposure time in mAs.

NEMA Standard 5-15-1979.

XR 8-1.33 TUBE

Tube means X-ray tube.

NEMA Standard 5-15-1979.

XR 8-1.34 TUBE RATING CHART

A tube rating chart is the set of data which specify the rated limits of operation of the tube in terms of the technique factors.

NEMA Standard 5-15-1979.

XR 8-1.35 USEFUL BEAM

A useful beam is the radiation which pases through the tube housing port and the aperture of the beam-limiting device when the exposure switch or timer is activated.

NEMA Standard 5-15-1979.

XR 8-1.36 VARIABLE-APERTURE BEAM-LIMITING DEVICE

A variable-aperture beam-limiting device is a beam-limiting device which has capacity for stepless adjustment of the X-ray field size at a given source-to-image distance.

NEMA Standard 5-15-1979.

XR 8-1.37 VISIBLE AREA

Visible area is that portion of the input surface of the image receptor over which incident X-ray photons are producing a visible image.

NEMA Standard 5-15-1979.

XR 8-1.38 X-RAY CONTROL

An X-ray control is a device which controls input power to the X-ray high-voltage generator or the X-ray tube, or both. It includes equipment which controls the technique factors of an X-ray exposure.

NEMA Standard 5-15-1979.

XR 8-1.39 X-RAY EQUIPMENT

X-ray equipment is an X-ray system, subsystem, or component thereof.

NEMA Standard 5-15-1979.

XR 8-1.40 X-RAY HIGH-VOLTAGE GENERATOR

An X-ray high-voltage generator is a device which transforms electrical energy from the potential supplied by the X-ray control to the tube operating potential. The device may also include means for transforming alternating current to direct current, filament transformers for the X-ray tube(s), high-voltage switches, electrical protective devices, and other appropriate elements.

NEMA Standard 5-15-1979.

XR 8-1.41 X-RAY SYSTEM

An X-ray system is an assemblage of components for the controlled production of X-rays. It includes minimally an X-ray high-voltage generator, an X-ray control, a tube housing assembly, a beam-limiting device, and the necessary supporting structures. Additional components which function with the system are considered integral parts of the system.

NEMA Standard 5-15-1979.

XR 8-1.42 X-RAY TUBE

An X-ray tube is any electron tube which is designed for the conversion of electrical energy into X-ray energy.

NEMA Standard 5-15-1979.

Copyright National Electrical Manufacturers Association
Provided by IHS under license with NEMA
No reproduction or networking permitted without license from IHS

Not for Resale

Part 2

TEST METHODS

XR 8-2.01 GENERAL

It is assumed that appropriate testing of the power lines has been accomplished prior to the installation of diagnostic X-ray equipment covered by these test methods. Adequacy of the power lines as specified by the manufacturer is essential for maintaining compliance and proper operation of the equipment and will have a direct bearing on the outcome of the tests specified herein.

Because of the various differences in design and equipment configurations, these test methods must be supplemented by the individual manufacturer to make certain that the particular function is properly tested. Variations in the procedures or test equipment, or both, may be necessary in order for a manufacturer to be able to perform these tests in the most appropriate manner (this sentence is approved as Authorized Engineering Information).

The extent of the tests, number of parameters tested, and the degree of accuracy required to measure compliance requirements is left to the discretion of the individual manufacturer.

The results measured as part of these tests shall be documented and maintained as a permanent record with the X-ray equipment.

NEMA Standard 5-15-1979.

XR 8-2.02 VISUAL INSPECTION

.01 Required Documents

Confirm that all applicable user information has been provided to the user (operators manual, maintenance schedule, user statements, completed and signed FDA Form FD 2579). [See 21 CFR 1020.30(h).*]

NEMA Standard 5-15-1979.

.02 Required Labels

A. Certification Label or Tag

For each certified component, confirm that a certification label or tag is permanently affixed to or inscribed on, or both, the following products. The tag or label shall contain the full name and address of the manufacturer of the component, the place, month and year of manufacture, and the model number and serial number of the component. [See 21 CFR 1010.2(b) and 1020.30(e).]

tube housing assembly
X-ray control(s)
X-ray high-voltage generator
spot-film device
image intensifier
table
cradle
cephalometric devices
film changer
cassette holders
beam-limiting devices
image-receptor support devices
for mammographic X-ray system

B. Warning Label

Confirm that a warning label bearing the words "WARNING: This X-ray unit may be dangerous to patient and operator unless safe exposure factors and operating instructions are observed" is affixed to the control panel containing the main power switch and is legible and accessible to view. [See 21 CFR 1020.30(j).]

NEMA Standard 5-15-1979.

XR 8-2.03 VISUAL AND AUDIBLE INDICATORS

These checks are permitted to be made during the performance verification tests.

.01 Multiple Tubes

Where two or more radiographic tubes are controlled by one exposure switch, the tube or tubes which have been selected shall be clearly indicated prior to initiation of exposure. This indication shall be both on the X-ray control and at or near the tube housing assembly. [See 21 CFR 1020.31(j).]

NEMA Standard 5-15-1979.

.02 Automatic Exposure Control (AEC)

If automatic exposure control is provided, indication shall be made on the control panel when this mode of operation is selected.

A visible signal shall indicate when an exposure has been terminated by the AEC limit setting, and manual resetting shall be required for additional AEC exposures.

[See 21 CFR 1020.31(a)(3).]

NEMA Standard 5-15-1979.

.03 Beam-on Indicators

Confirm that the X-ray control provides a visual indication whenever X-rays are produced and that a signal audible to the operator is present indicating that the exposure has terminated. [See 21 CFR 1020.31(i).]

NEMA Standard 5-15-1979.

*See Appendix A for a list of publications referenced in this standards publication.

Copyright National Electrical Manufacturers Association
Provided by IHS under license with NEMA
No reproduction or networking permitted without license from IHS
Not for Resale

.04 Fluoroscopic Preset Timer Termination

Verify that an audible signal indicates the completion of any preset cumulative on-time.

Verify that the audible signal continues to sound while X-rays are produced until the timing device is reset.

Verify that the maximum preset on-time is less than or equal to 5 minutes.

[See 21 CFR 1020.32(g).]

NEMA Standard 5-15-1979.

.05 High-level Control

If a high-level control is provided, verify that a special means such as additional pressure applied continuously by the operator is necessary and that a continuous signal audible to the fluoroscopist indicating that the high-level control is being employed is present. [See 21 CFR 1020.32 (d)(2)(ii).]

NEMA Standard 5-15-1979.

.06 Technique Factors, Indication

Confirm that the technique factors to be used during an exposure are indicated before the exposure begins, except when automatic exposure control is being used, and are visible from the operator's position except in the case of spot-films made by the fluoroscopist. [See 21 CFR 1020.31(a).]

NEMA Standard 5-15-1979.

.07 Battery-powered Equipment

If the control is battery-powered, confirm that a means is provided on the control panel that indicates whether the battery is in a state of charge adequate for proper operation. Confirm that the indicator is operational. [See 21 CFR 1020.30(c).]

NEMA Standard 5-15-1979.

.08 Tube Potential and Current

Confirm that during fluoroscopy and cine-radiography a means is provided to continuously indicate the X-ray tube potential and tube current. [See 21 CFR 1020.32(e).]

NEMA Standard 5-15-1979.

XR 8-2.04 kVp ACCURACY

REQUIREMENT—The deviation of the X-ray peak tube potential from the indicated values shall not exceed the maximum deviation assigned by the manufacturer when the equipment is connected to an adequate power supply as specified by the manufacturer. [See 21 CFR 1020.31(a)(4).]

.01 Method I—High-voltage Divider Method

A. General

1. The high-voltage cables of the X-ray system must be accessible and fitted with Federal Standard connectors.

Caution must be exercised at all times when connections are made in the high-voltage circuits of the X-ray system. Use only high-voltage cables that are in good condition. The high-voltage connectors must be kept clean and the shield must be grounded. The X-ray system must be turned off when connections are being made to the high-voltage circuit. High-voltage cables must be grounded immediately when disconnected to dissipate any electrical charge that may remain on the cables or tube.

2. The peak tube potential or waveform, or both, shall be examined with an oscilloscope or meter, or both.

B. Equipment

1. A high-voltage divider capable of measuring anode and cathode circuits when used with an appropriate oscilloscope or meter as recommended by the specific manufacturer.

2. Auxiliary high-voltage cables with Federal Standard connectors (two each). The cables must be no longer than is necessary to accomplish the test.

C. Procedure  *

1. Record the maximum deviation from the nominal indicated peak tube potential which the manufacturer has specified.

2. Verify and record whether the power supply line-voltage regulation for the X-ray system is as specified by the manufacturer.

3. Close the beam-limiting device shutters as far as possible. If they will not close completely, block the beam port with lead.

4. REMOVE POWER TO THE X-RAY SYSTEM and connect the high-voltage dividers per the manufacturer's instructions.

5. Make certain all high-voltage connections are correct, tight, and that the shields are grounded.

6. Connect the oscilloscope or meter to the high-voltage measurement system. Verify that instrumentation is set to proper ranges.

7. Apply power to the X-ray unit and all test equipment and allow sufficient stabilization time.

8. Select the desired technique factors and record the nominal values indicated. Adjust the line-voltage compensator if provided.

*See page i for radiation and electrical warnings.

Copyright National Electrical Manufacturers Association
Provided by IHS under license with NEMA
No reproduction or networking permitted without license from IHS
Not for Resale

9. Make an exposure and record the potential from the oscilloscope or meter in accordance with the manufacturer's instructions.
10. To verify the peak tube potential at other technique factors, repeat steps 8 and 9.
11. Record test instrument model numbers, serial numbers, and dates of calibration.

D. Verification of Compliance

Verify and record whether the potentials recorded are within the limits specified by the manufacturer.

NEMA Standard 5-15-1979.

.02 Method II—X-ray Test Cassette Method—kVp

A. General

1. Necessary precautions must be taken in the loading, unloading, and processing of film to assure consistency of the results.
2. Variations in the filtration and output of the machine, film type, and processing will require adjustment of the mAs value to obtain the desired density.

B. Equipment

1. kVp test cassette (modified Andran-Crooks cassette).
2. Densitometer capable of measuring 0 to 4.0 optical densities. Higher accuracies are obtainable with the use of a densitometer.

C. Procedure

1. Load cassette with fresh film.
2. Place the cassette on the X-ray table with the face of the cassette toward the X-ray tube; the long sides of the cassette shall be parallel to the anode-cathode axis of the X-ray tube. Assure that the source assembly is perpendicular to the cassette.
3. Center the region of the cassette to be exposed in the beam in accordance with the cassette manufacturer's instructions.
4. Adjust the line voltage compensator, if necessary, and set the proper technique factors on the X-ray control as specified in the test cassette instructions. The kVp accuracy will not be affected if the mAs is adjusted to obtain the proper mean film density from 0.5 to 1.5.
5. Make an exposure at the selected kVp value(s).
6. Process film.
7. Examine the film on a view box to determine the copper thickness for which there is a density match. The use of the densitometer is necessary for highest precision. Interpolate between steps for accuracy.

EXAMPLE OF INTERPOLATION

Step	Optical Density of Step	Optical Density of Reference
5	0.85	0.75
6	0.72	0.74

$$\text{match step} = 5 + \frac{85 - 74.5}{85 - 72} = 5.8$$

8. Record the match step.
9. Determine the kVp from the data supplied with the test cassette for the voltage waveform used (single- or three-phase). Record the kVp measured, and the kVp, mA, seconds, and source-to-film distance.

D. Verification of Compliance

Verify and record whether the potentials measured are within the limits specified by the manufacturer.

NEMA Standard 5-15-1979.

.03 Method III—Indirect kVp Measurement

A. General Information

This test shall be used only when access to the kVp circuit (secondary) cannot be obtained using the high-voltage divider method and the kVp test cassette method is not appropriate.

B. Equipment

Use appropriate AC meter.

C. Procedure

1. Turn off power to the X-ray unit.
2. Remove appropriate trim covers to gain access to primary terminals of high-voltage circuits.
3. Connect voltmeter test leads to the primary terminals; observe manufacturer's specific instructions and cautions.
4. Turn on unit and test equipment. Allow sufficient stabilization times and correct line compensation if necessary.
5. Select the desired technique factors and record the nominal values indicated.

Copyright National Electrical Manufacturers Association
Provided by IHS under license with NEMA
No reproduction or networking permitted without license from IHS
Not for Resale

6. Make an exposure and record the potential from the meter.

7. To verify the peak tube potential at other technique factors, repeat steps 5 and 6.

8. Record test instrument model number(s), serials number(s), and date(s) of calibration.

D. Verification of Compliance

Verify and record whether the potentials measured are within the limits for primary voltage specified by the manufacturer.

NEMA Standard 5-15-1979.

XR 8-2.05 mA ACCURACY

REQUIREMENT—The actual tube current shall agree with the indicated tube current within the error limits assigned by the manufacturer when the X-ray system is connected to an adequate power supply as specified by the manufacturer. [See 21 CFR 1020.31(a)(4).]

.01 Method I—High-voltage Clip-on Direct-current Probe With Milliammeter or Oscilloscope Readout

A. General

1. This test requires that the anode cable of the high-voltage system be accessible.

2. Exposure times must be kept longer than the response time of the probe and meter in order to obtain meaningful results.

3. The probe is clipped around the anode high-voltage cable which is connected to the tube housing assembly. Do not connect the probe around the cable carrying alternating current to operate the anode rotor, light localizer, or fan. Observe proper polarity for correct operation.

4. Observe manufacturer's instructions for proper use of the probe.

B. Equipment

Clip-on direct-current probe with appropriate milliammeter or oscilloscope readout.

C. Procedure 

1. Record the maximum deviation from the tube current indications or settings, or both, which the manufacturer has specified.

2. Verify that the power supply for the X-ray system is adequate as specified by the manufacturer.

3. Close the beam-limiting device shutters as far as possible. If they will not close completely, block the beam port with lead.

4. Clip the probe around the anode high-voltage cable and connect it to the appropriate readout. Do not clip the probe around the cable carrying alternating current to operate the anode rotor, light localizer, or fan. Observe the correct polarity and make certain that the clamp is completely closed.

5. Refer to manufacturer's instructions for proper range selection and precautions.

6. Measure the tube current at a variety of techniques which cover the range of the X-ray system. Keep the exposure time within the heat limitations and duty cycle of the tube and housing. Record the current measured for each technique tested and the technique factors used. If a panel meter has been provided to indicate the tube current, record that indication as well.

7. Record the model number(s), serial number(s), and calibration date(s) of the instrumentation used.

D. Verification of Compliance

Verify that the tube currents measured are within the limits specified by the manufacturer.

NEMA Standard 5-15-1979.

.02 Method II—High-voltage Direct-current Milliammeter (or mAs Meter With Known Timer Accuracy) in Series With the X-ray Tube

A. General

1. This method can only be used when access to the high-voltage cables is available.

2. Assure that exposure times longer than the response time of the instruments are used.

3. Do not exceed the full-scale current range of the meter.

4. *Caution must be exercised at all times when connections are made in the high-voltage circuits of the X-ray system. Use only high-voltage cables that are in good condition. The X-ray system must be turned off (power removed) when connections are made to the high-voltage circuit. Do not touch the metal housing of the instruments during exposure. When disconnecting the high-voltage cables, be sure to immediately ground them to assure that a charge does not remain on the cables or the tube.*

5. High-voltage connectors must be kept clean and the shields must be grounded.

B. Equipment

1. Direct-current milliammeter mounted and insulated in a metal tank and provided with Federal Standard high-voltage connectors.

2. Two auxiliary high-voltage cables with Federal Standard high-voltage connectors.

Copyright National Electrical Manufacturers Association
Provided by IHS under license with NEMA
No reproduction or networking permitted without license from IHS
Not for Resale

C. Procedure ⚡☢

1. Record the maximum deviation from the tube current indications or settings, or both, which the manufacturer has specified.

2. Verify that the power supply line voltage regulation for the X-ray system is as specified by the manufacturer.

3. Close the beam-limiting device shutters as far as possible. If they will not close completely, block the beam port with lead.

4. With the X-ray system turned off (power removed), disconnect the anode high-voltage cable at the tube housing assembly or at the transformer, whichever provides the easiest access.

5. Connect the appropriate cabling to the high-voltage direct-current meter per the manufacturer's instructions.

6. Make sure all connections are tight and that the high-voltage direct-current meter is positioned so that the meter can be viewed. *Double check to be sure that all connections are correct.*

7. Measure and record the current at a variety of tube-current and tube-potential settings which cover the range of the X-ray system. Observe response time and full-scale capabilities of the instrumentation.

If a panel meter has been provided to indicate tube current, record that indication also.

8. Record the model number(s), serial number(s), and calibration date(s) of the instruments used.

D. Verification of Compliance

Verify that the tube currents recorded are within the limits specified by the manufacturer.

NEMA Standard 5-15-1979.

.03 Method III—Direct-current Milliammeter (or mAs Meter With Known Timer Accuracy)

A. General

1. This method cannot be used when rectification takes place within the control panel meter. Consult the circuit diagram of the control meter circuit.

2. The direct-current milliammeter shall be connected into the appropriate section of the measuring circuit. This can usually be done directly at the meter itself or at the measuring points provided.

3. Instrument loading considerations must be analyzed.

4. *The X-ray system power must be turned off when connections are made or broken in the circuit. Care must be used not to short-circuit the control electronics while performing this test. Every effort shall be made to assure safe working test set-up.*

B. Equipment

Direct-current milliammeter or mAs meter as specified by the manufacturer.

C. Procedure ⚡☢

1. Record the maximum deviation from the tube current indications or settings, or both, which the manufacturer has specified.

2. Verify that the power supply line-voltage regulation for the X-ray system is as specified by the manufacturer.

3. Close the beam-limiting device shutters as far as possible. If they will not close completely, block the beam port with lead.

4. With the X-ray system power turned off, connect the direct-current meter to the appropriate points within the control. *CAUTION:* Be sure that the proper polarity and meter range are observed.

5. Measure the tube current at a variety of techniques which cover the range of the X-ray system. Assure that an exposure time within the heat limitations and duty cycle of the tube and housing is used. Record the current measured with the milliammeter for each technique tested.

6. Record the measurement method used and the technique factors set. If a panel meter has been provided to indicate tube current, record that indication also.

7. Record the model number, serial number, and date of calibration of the direct-current meter.

D. Verification of Compliance

Verify and record whether the currents recorded are within the limits specified by the manufacturer.

NEMA Standard 5-15-1979.

XR 8-2.06 TIMER ACCURACY

REQUIREMENT—The deviation between the measured exposure time and the indicated exposure time during any exposure shall not exceed the maximum deviation specified by the manufacturer when the equipment is connected to an adequate power supply as specified by the manufacturer. [See 21 CFR 1020.31(a)(4).]

.01 Method I—High-resistance Voltage Divider Connected to Output of High-voltage Transformer

A. General

1. Method I is for use when access to the X-ray high-voltage cables is available and it

Copyright National Electrical Manufacturers Association
Provided by IHS under license with NEMA
No reproduction or networking permitted without license from IHS
Not for Resale
PROBLEM HARD COPY

is desired to measure exposure time in terms of the secondary high-voltage waveform.

2. For a pulsed single-phase X-ray unit operating on a power supply frequency of 60 hertz, division of the pulse count by 120 for full-wave rectified units yields the exposure time in seconds (divide by 60 for half-wave or self-rectified systems).

3. For constant potential and three-phase systems, the exposure time is measured from the time the tube potential reaches a defined level until the tube potential falls to a defined tube potential as specified by the manufacturer.

4. Caution must be exercised at all times when connections are made in the high-voltage circuits of the X-ray system. Use only high-voltage cables that are in good condition. The high-voltage connectors must be kept clean and the shield must be grounded. The X-ray system must be turned off when connections are being made to the high-voltage circuit. High-voltage cables must be grounded immediately when disconnected to dissipate any electrical charge that may remain on the cables or tube.

B. Equipment

1. A high-voltage divider capable of measuring anode and cathode circuits when used with an appropriate oscilloscope as recommended by the specific manufacturer.

2. Auxiliary high-voltage cables with Federal Standard connectors (two each). The cables must be no longer than necessary to accomplish the test.

3. A suitable oscilloscope with an optional camera mount as recommended by the specific manufacturer.

C. Procedure 

1. Record the maximum deviation from the nominal indicated exposure time which the manufacturer has specified.

2. Verify that the power supply line-voltage regulation for the X-ray system is as specified by the manufacturer.

3. Close the beam-limiting shutters as far as possible. If they will not close completely, block the beam port with lead.

4. With the X-ray system turned off (power removed) connect the cables to the voltage dividers per the manufacturer's instructions.

5. Make certain that all high-voltage connections are correct, tight, and the shields grounded.

6. Connect the oscilloscope to the high-voltage measurement system.

7. Turn on the X-ray unit and associated instrumentation and allow sufficient stabilization time. Check the oscilloscope time base calibration.

8. Adjust the line-voltage compensator, select the technique factors desired, and record the nominal values indicated.

9. Verify that the oscilloscope is set for display of the time interval chosen.

10. Make an exposure, adjusting the oscilloscope voltage sensitivity to obtain the appropriate timing threshold as specified by the individual manufacturer. (Preliminary exposures and adjustments will be necessary to obtain the best display on the oscilloscope. Record the exposure time or pulses, or both, measured.

11. Repeat steps 8 through 10 for other exposure times and technique factors. Record the nominal settings and the corresponding measurements.

12. Record the model and serial numbers and dates of calibration of the test instruments used.

D. Verification of Compliance

Verify that the exposure times recorded are within the limits specified by the manufacturer.

NEMA Standard 5-15-1979.

.02 Method II—X-ray Monitor Placed In the Useful X-ray Beam

A. General

1. Method II is for use when the exposure time is to be measured in terms of the radiation output waveform or when no access to the high-voltage circuit exists. Energy dependence and response time of the detector must be considered.

2. For a single-phase X-ray unit operating on a power supply frequency of 60 hertz, division of the pulse count by 120 for full-wave rectified units yields the exposure time in seconds (divide by 60 for half-wave or self-rectified systems).

3. For constant potential and three-phase systems, the exposure time is measured from the time the tube potential reaches a defined level until the tube potential falls to a defined level as specified by the manufacturer.

4. It is necessary to analyze the output on the oscilloscope as distortion in the output waveform may cause this unit to read incorrectly, and the noise level in the output of the X-ray system may also interfere with exposure time measurements.

Copyright National Electrical Manufacturers Association
Provided by IHS under license with NEMA
No reproduction or networking permitted without license from IHS
Not for Resale
PROBLEM HARD COPY

5. The use of various time measurement devices requires a variety of different instrumentation set-ups. Reference to the appropriate device manufacturer's instructions is required to assure proper measurement of the time interval.

B. Equipment

X-ray monitor capable of measuring pulse width (photodiode in conjunction with an oscilloscope, ionization chamber, etc.).

C. Procedure

1. Record the maximum deviation from the indicated nominal exposure time which the manufacturer has specified.
2. Verify and record whether the power supply line-voltage regulation for the X-ray system is as specified by the manufacturer.
3. Connect the detector probe cable to the readout device.
4. Turn on the readout device and the X-ray system and allow sufficient time for warm-up.
5. Position the detector probe in the useful beam and adjust the beam-limiting devices to assure that the probe is included in the useful beam. Adjust the source-to-probe distance to less than 50 centimeters. For tomographic units, attach the probe to the diagnostic source assembly so that the detector is in the useful beam, and position the probe so that it can move freely during travel.
6. Adjust the line-voltage compensator, select the technique factors desired, and record the nominal values indicated.
7. Make certain that the equipment is properly set up as required.
8. Make an exposure(s) and record the exposure time interval or number of pulses indicated on the readout device.
9. Repeat steps 6 through 8 for other exposure times and technique factors. Record the nominal settings and the corresponding measurements.
10. Record the model and serial numbers and dates of calibration of the instrumentation used.

D. Verification of Compliance

Verify that the exposure times recorded are within the limits specified by the manufacturer.

NEMA Standard 5-15-1979.

.03 Method III—Spinning Top (Synchronous)

A. General

Method III is for use when the exposure time is to be measured in terms of radiation output or when no access to the high-voltage circuits exists.

B. Equipment

1. Synchronous motor-driven top.
2. Lead blocker sheets.
3. Cassette.
4. Protractor.

C. Procedure

1. Plug top into electrical socket and ascertain that it is functioning.
2. Divide the film into four regions and place the synchronous top and optional step-wedge in region one. Cover the unused portions of the cassette with the lead blockers.
3. Select the appropriate distance and adjust the collimator so that the beam dimensions just exceed the dimensions of the region in use.
4. Adjust the line-voltage compensator and select the timer setting to be tested and record this time. Set appropriate technique factors to properly expose the film.
5. Make an exposure.
6. Move the top to the next region of the cassette and cover the previously exposed region(s) and the unused regions with the lead blockers. Repeat appropriate steps 1 through 5 for different time values until all 4 regions of the cassette have been exposed. If possible, all exposures shall be made at the same value of mAs.
7. Process the exposed film.
8. On the processed radiograph, immediately record the indicated times from the data sheet to the corresponding regions on the radiograph.

D. Verification of Compliance

For single-phase X-ray units, count the number of black dots on the radiograph and divide this number by 120 (divide by 60 for half-wave and self-rectified systems). For three-phase and constant-potential X-ray units, use a protractor to measure the arc.* Divide this number by the product of the rotational speed in revolutions per second (rps) and 360 degrees.

$$\text{Measured exposure time} = \frac{\text{(measured angle)}}{360 \times \text{rps}} \text{ sec}$$

For example, if the measured angle was 18 degrees (1/20 of circle) and the rotational

* Some tops have more than one slit and overlap of the dots or arcs occurs. If this is observed, count or measure from the beginning of one overlap (double-exposed) region to the end of the next. Subtract the width of the slit when measuring the angle for three-phase systems; e.g., actual angle of 20°, slit equivalent to 2°, arc = 18°.

Copyright National Electrical Manufacturers Association
Provided by IHS under license with NEMA
No reproduction or networking permitted without license from IHS
Not for Resale

speed for this measurement was 1 revolution per second, then the measured time in seconds is calculated as follows:

$$\text{Measured exposure time} = \frac{18}{360} = 0.05 \text{ sec}$$

Some manufacturers include a transparent template which eliminates this calculation and automatically accounts for rotational speed.

Step starting of the X-ray contactor or core biasing circuits may generate an additional, low-amplitude pulse which shall not be counted. The equipment shall operate within the time range indicated by the manufacturer.

NEMA Standard 5-15-1979.

XR 8-2.07 mAs ACCURACY

REQUIREMENT—The actual tube-current-exposure time product (mAs) shall agree with the indicated value, within the limits assigned by the manufacturer, when the X-ray system is connected to an adequate power supply as specified by the manufacturer. [See 21 CFR 1020.31 (a)(4).]

.01 Method I—High-voltage Direct-current Milliampere-second Meter

A. General

1. Method I is for use when access to the X-ray system high-voltage cables is available.

2. Observe response time and full-scale capability of the measuring system.

3. *Caution must be exercised at all times when connections are made in the high-voltage circuits of the X-ray system. Use only high-voltage cables that are in good condition. Power to the X-ray system must be removed when connections are made to the high-voltage circuit. Do not touch the metal housing of the milliampere-second meter during exposure. When disconnecting the high-voltage cables, be sure to immediately ground them to dissipate any charge that may remain on the cables or tube.*

B. Equipment

1. Direct-current milliampere-second meter mounted and insulated in a metal tank and provided with Federal Standard high-voltage receptacles.

2. Auxiliary high-voltage cable(s) with Federal Standard high-voltage connectors.

C. Procedure

1. Record the maximum deviation from the nominal indicated tube current-exposure times or settings, or both, specified by the manufacturer.

2. Verify that the power supply line-voltage regulation for the X-ray system is as specified by the manufacturer.

3. Close the beam-limiting device shutters as far as possible. If they will not close completely, block the beam port with lead.

4. With the X-ray system turned off (power removed) connect the cabling to the mAs meter per the manufacturer's instructions.

5. Be sure that all connections are tight and that the milliampere-second meter is positioned so that readings can be taken. *Double check to be sure that all connections are correct.*

6. Turn on the X-ray system and associated equipment and allow sufficient time for stabilization.

7. Measure the tube current-exposure time at a variety of technique factors which cover the range of the X-ray system.

8. Record the indicated technique factors. Record the measured tube current-exposure time products for each technique used. If the X-ray system has a panel meter that measures the tube current-exposure time product (mAs), record the meter indication for each technique used.

9. Record the model and serial numbers and dates of calibration for the test instrumentation used.

D. Verification of Compliance

Verify that the tube-current-exposure-time products measured are within the limits specified by the manufacturer.

NEMA Standard 5-15-1979.

.02 Method II—Direct-current mAs Meter in Series With Control Unit Tube Current Measuring Circuit

A. General

1. When rectification takes place within the control panel meter, an alternating-current mAs meter must be used.

2. If rectification is external to the control panel meter, a direct-current mAs meter must be used.

3. *The X-ray system power must be turned off when connections are made or broken in the circuit. Care must be used not to short-circuit the control electronics while performing this test. Every effort shall be made to assure a safe working test set-up.*

B. Equipment

Alternating-current or direct-current mAs meter.

Copyright National Electrical Manufacturers Association
Provided by IHS under license with NEMA
No reproduction or networking permitted without license from IHS
Not for Resale

PROBLEM HARD COPY

C. Procedure

1. Record the maximum deviation from the nominal indicated tube-current exposure times or settings, or both, specified by the manufacturer.
2. Verify that the power supply line-voltage regulation for the X-ray system is as specified by the manufacturer.
3. Close the beam-limiting device shutters as far as possible. If they will not close completely, block the beam port with lead.
4. With the X-ray system power turned off, connect the mAs meter to the control circuit per the manufacturer's instructions.
5. Turn on the X-ray system and instrumentation and allow sufficient stabilization time.
6. Measure the tube-current-exposure-time product at a variety of technique factors which cover the range of the X-ray system. Observe response time and full-range capabilities of the instrumentation.
7. Record the indicated technique factors for each technique used. Record the measured tube-current-exposure-time product for each technique used. Record for each technique used the indicated mAs on the control panel meter if one is included in the X-ray system.
8. Record the model and serial numbers and calibration dates of all instrumentation used.

D. Verification of Compliance

Verify that the tube-current-exposure-time products measured are within the limits specified by the manufacturer.

NEMA Standard 5-15-1979.

.03 Method III—Exposure Time and mA Product Calculation

A. General

1. Refer to applicable exposure time determination tests and use the results of these tests to determine the mAs product.
2. For each technique factor tested multiply the measured value of exposure time and tube current to obtain a calculated value of mAs.
3. The test equipment and test procedures are specified in the associated exposure time and tube current tests.

B. Verification of Compliance

Verify that the tube-current-exposure-time products calculated are within the limits specified by the manufacturer.

NEMA Standard 5-15-1979.

XR 8-2.08 REPRODUCIBILITY AND LINEARITY OF THE X-RAY SYSTEM OUTPUT

REQUIREMENT—When the X-ray unit is operated on an adequate power supply as specified by the manufacturer, (1) the estimated coefficient of variation of radiation exposures shall be not greater than 0.05 for any specific combination of technique factors, and (2) the average ratios of exposure to the indicated tube-current-exposure-time product (mAs) obtained at any two consecutive tube current settings shall not differ by more than 0.10 times their sum, or

$$\frac{|\bar{X}_1 - \bar{X}_2|}{\bar{X}_1 + \bar{X}_2} \leqslant 0.10$$

where $\bar{X}_1$ and $\bar{X}_2$ are the average mR/mAs values obtained at each of two consecutive tube current settings.

For equipment manufactured after September 5, 1978, all variable controls for technique factors shall be adjusted to alternate settings and reset to the test setting after each measurement. [See 21 CFR 1020.31(b)(c).]

.01 Method I—BRH/FDA Test Stand and X-ray Monitor Method

A. General

1. The following test requires that a number of exposures be made within a time period of 1 hour. The BRH regulation states "that determination of compliance shall be based on 10 consecutive measurements taken within 1 hour." However, the actual number of exposures chosen for any test for the determination of reproducibility and linearity are at the option of the manufacturer. [See 21 CFR 1020.31(b)(1)(2).]
2. Verify that the power supply line-voltage regulation for the X-ray system is as specified by the manufacturer.
3. Care must be exercised to make certain that the manufacturer's tube ratings are not exceeded.

B. Equipment

1. BRH/FDA compliance test stand with spacer assembly (Fig. 2-1).
2. Two-inch beam-defining assembly.
3. Ion chamber assembly.
4. Survey meter with cable provided.

C. Procedure

1. Apply power to X-ray equipment and allow sufficient time for stabilization.

Copyright National Electrical Manufacturers Association
Provided by IHS under license with NEMA
No reproduction or networking permitted without license from IHS
Not for Resale

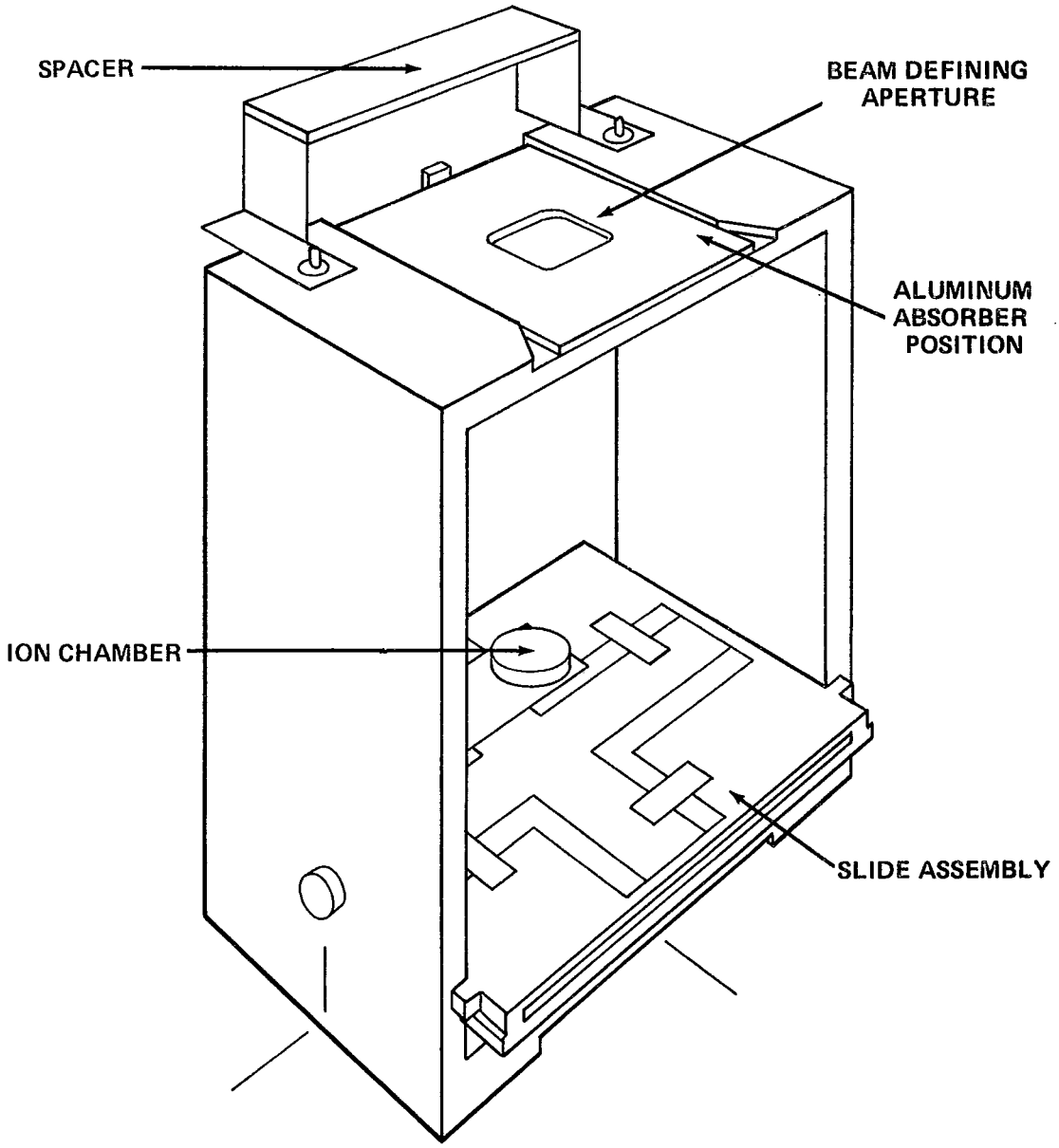

Fig. 2-1
GENERAL SET-UP
BRH/FDA TEST STAND

Copyright National Electrical Manufacturers Association
Provided by IHS under license with NEMA
No reproduction or networking permitted without license from IHS
Not for Resale

2. Using the means provided, align the source assembly such that the beam axis is perpendicular to the image receptor.

3. Place the test stand on the table.

4. Position the spacer so as not to intersect the primary beam and secure it with the push-button connectors.

5. Center the source assembly over the test stand using the means provided, e.g. the light field used to define the X-ray field.

6. Bring the source assembly down into firm contact with the spacer.

7. Mount the ion chamber assembly facing up at position B (see Fig. 2-2). Attach the ion chamber via the short cable to the survey instrument.

8. Adjust the line-voltage compensator and select technique factors most commonly used in the day-to-day operation of the system. Record the technique factors.

9. Make ten successive exposures. Record the exposure readings.

10. Using the same kVp and exposure time settings, change the mA to an adjacent setting. If mA selection is continuous, the mA selected can differ from the original setting by no greater than a factor of 2. Record the mA selected.

11. Make ten successive exposures. Record the exposure readings.

12. Calculate the coefficient of variation for each of the two sets of ten exposures (see par. D) and record.

13. Calculate the coefficient of linearity (see par. D) and record.

D. Calculations

1. *Coefficient of Variation C*

The coefficient of variation C for a sample size of n exposure readings is:

$$C = \frac{\left[\sum_{i=1}^{n} \frac{(X_i - \bar{X})^2}{n-1}\right]^{1/2}}{\bar{X}}$$

where

X_i = i^{th} exposure reading

$\bar{X}$ = the mean of the n exposure readings

n = number of exposures

For example, assume it is required to make a series of ten exposures at a given kV (60 kVp). Record the mAs and radiation output.

a. Add the ten output readings and divide the sum by 10 to find the average.

b. Determine the difference between each individual output reading from the average and square the difference. Enter this answer in the column provided.

c. Add these ten answers and divide the sum by 9.

d. Find the square root of the answer and divide by the average as determined in step a.

e. The answer is C (coefficient of variation).

Example:

Measurement	Radiation* Exposure	Difference	Difference Squared
1	207	0.8	0.64
2	214	7.8	60.84
3	199	7.2	51.84
4	205	1.2	1.44
5	210	3.8	14.44
6	201	5.2	27.04
7	211	4.8	23.04
8	204	2.2	4.84
9	205	1.2	1.44
10	206	0.2	0.04

*Radiation exposures listed are examples only.

$2062 \div 10 = 206.2$ $185.6 \div 9 = 20.62$

$\sqrt{20.62} = 4.54$ $4.54 \div 206.2 = .022 = C$

2. *Coefficient of Linearity L*

The coefficient of linearity L is calculated:

$$L = \frac{|\bar{X}_1 - \bar{X}_2|}{\bar{X}_1 + \bar{X}_2}$$

where $\bar{X}_1$ and $\bar{X}_2$ are the average mR/mAs values calculated for each of the two consecutive tube current settings.

E. Verification of Compliance

Coefficient of variation C shall be less than or equal to 0.05.

Coefficient of linearity L shall be less than or equal to 0.10.

NEMA Standard 5-15-1979.

.02 Method II—X-ray Monitor Method

A. General

1. The following test requires that a number of exposures be made within a time period

Copyright National Electrical Manufacturers Association
Provided by IHS under license with NEMA
No reproduction or networking permitted without license from IHS
Not for Resale

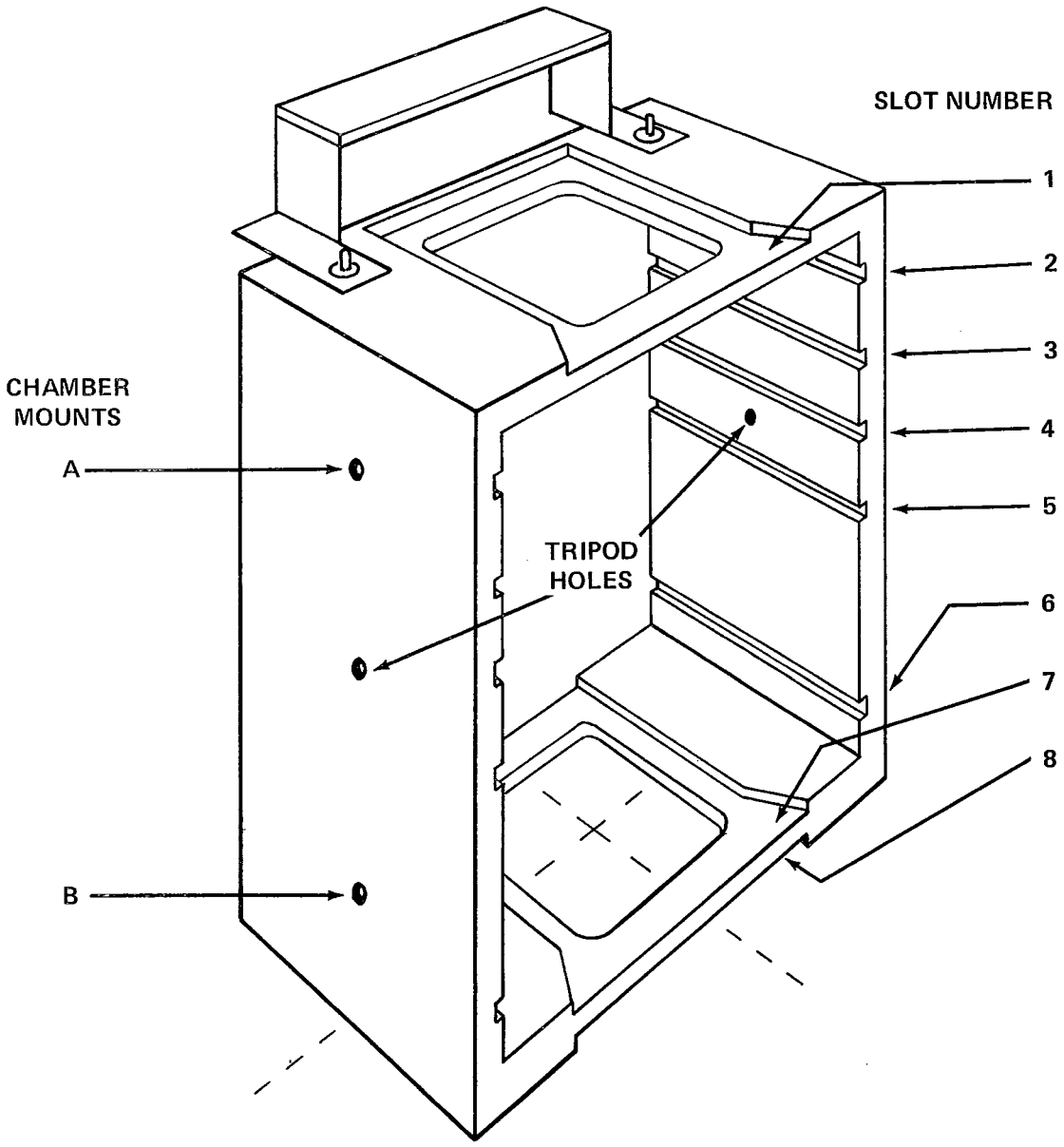

Fig. 2-2
BRH/FDA TEST STAND
SHOWING CHAMBER MOUNTS AND SLOTS

Copyright National Electrical Manufacturers Association
Provided by IHS under license with NEMA
No reproduction or networking permitted without license from IHS
Not for Resale

of 1 hour. The BRH regulation states "that determination of compliance shall be based on 10 consecutive measurements taken within 1 hour." However, the actual number of exposures chosen for any test for the determination of reproducibility and linearity are at the option of the manufacturer. [See 21 CFR 1020.31 (b)(1)(2).]

2. Verify that the power supply line-voltage regulation for the X-ray system is as specified by the manufacturer.

3. Care must be exercised to make certain that the manufacturer's tube ratings are not exceeded.

B. Equipment

1. Radiation detector as specified by the manufacturer.

2. Beam attenuator used in the automatic exposure time mode.

C. Procedure

1. Allow the X-ray system to stabilize as specified by the manufacturer.

2. Connect the ionization chamber system and center the radiation detector in the center of the X-ray field at a distance of approximately 50 centimeters from the X-ray source.

3. One or both of the following methods shall be used, as appropriate for the equipment under test.

a. *Systems Tested in a Preset Exposure Time Mode*

(1) Select technique factors to obtain an adequate exposure. Record the technique factors used.

(2) Make ten consecutive exposures and measure each with the radiation detector system. Be sure to zero the readout device before each exposure measurement.

(3) Verify and record that the measurements are taken consecutively and within a period of 1 hour.

(4) Change the tube current to the next setting (lower or higher). If the tube current adjustment is continuous, select a current setting that differs by a factor of 2 or less from the previous setting. The tube potential is kept at the same potential. Select the exposure time so that the tube-current-exposure-time product remains approximately the same as selected in step (1).

(5) Repeat steps (2) through (4) above at the new technique factors. Be sure that the conditions of step (3) are met.

(6) Repeat steps (2) through (5) for other adjacent tube current settings.

(7) Record the test instrument model and serial numbers and calibration dates.

b. *Systems Tested in an Automatic Exposure Time Mode*

(1) Position the beam attenuator between the radiation detector and the exposure time detector.

(2) Select the technique factors to provide for an adequate exposure.

(3) Make ten consecutive exposures and measure each with the radiation detector system.

(4) Record the ten exposure measurements.

(5) Verify and record that the measurements are taken consecutively and within a period of 1 hour.

(6) Repeat steps (2) through (5) for other technique factors.

(7) Record the model and serial numbers and the dates of calibration of the test instruments.

D. Verification of Compliance

Coefficient of variation C shall be less than or equal to 0.05.

Coefficient of linearity L shall be less than or equal to 0.10.

The linearity test is not applicable to measurements taken in the automatic exposure mode.

NEMA Standard 5-15-1979.

.03 Linearity

REQUIREMENT—When the X-ray unit is operated on an adequate power supply as specified by the manufacturer, the average ratios of exposure to the indicated tube-current-exposure-time product (mAs) obtained at any two consecutive tube current settings shall not differ by more than 0.10 times their sum or

$$\frac{|\bar{X}_1 - \bar{X}_2|}{\bar{X}_1 + \bar{X}_2} \leq 0.10$$

where $\bar{X}_1$ and $\bar{X}_2$ are the average mR/mAs values obtained at each of two consecutive tube current settings. [See 21 CFR 1020.31(b)(c).]

A. General

1. This test can be performed only if the percent of accuracy between adjacent mA stations is specified by the manufacturer.

2. "Specified accuracy" refers to technique accuracy statements made by the manufacturer.

3. It is necessary that kVp and mA accuracy be verified by previous test methods.

B. Equipment

1. Oscilloscope.
2. High-voltage divider.

Copyright National Electrical Manufacturers Association
Provided by IHS under license with NEMA
No reproduction or networking permitted without license from IHS
Not for Resale

C. Procedure

1. Be sure that generator panel or external indicator accuracy has been verified. Refer to method for mA measurement for procedure.
2. Connect high-voltage divider and scope to read kVp; refer to kVp measurement method. Turn unit on and select tube to be checked, leaving both energized continuously.
3. Prepare a rough data form (see Fig. 2-3) to suit generator technique selection capabilities and rated maximum kVp.
4. Prepare an accuracy chart (see Fig. 2-4) to suit generator technique selection capabilities and rated maximum kVp. Exposure techniques which exceed tube or generator ratings shall be crossed out.
5. Starting at 80 kVp, make exposures at all mA stations, recording panel or external meter mA or mAs reading and kVp reading in a form similar to Fig. 2-3.
6. Repeat step 5 at a low kVp and again at a high kVp.
7. Starting with a completed rough data form, complete an accuracy chart similar to Fig. 2-4. Fig. 2-5 is an aid to quick computation of percent mAs error.

D. Verification of Compliance

1. The percent errors, including sign, between adjacent mA stations shall be less than the manufacturing specification.
2. The kVp between adjacent mA stations shall differ by less than the manufacturing specification.
3. Steps 1 and 2 apply over the kVp range specified by the manufacturer.

NEMA Standard 5-15-1979.

XR 8-2.09 BEAM QUALITY (HALF-VALUE LAYER [HVL])

REQUIREMENT—The minimum beam quality requirements listed in Table 2-1 shall be met. [See 21 CFR 1020.30(m).]

.01 Method I—Visual Determination of Half-value Layer (HVL)

A. General

The above HVL requirement will be considered to have been met if it can be demonstrated that the aluminum equivalent of the total filtration in the primary beam is not less than that shown in Table 2-2.

B. Equipment

None required.

Table 2-1
MINIMUM BEAM QUALITY REQUIREMENTS

KVp Range	Measured kVp	HVL (mmAl*)
Below 50	30	0.3
	40	0.4
	49	0.5
50 to 70	50	1.2
	60	1.3
	70	1.5
Above 70	71	2.1
	80	2.3
	90	2.5
	100	2.7
	110	3.0
	120	3.2
	130	3.5
	140	3.8
	150	4.1

* Type 1100 aluminum alloy as given in Aluminum Association Publication No. ASD-1, *Aluminum Standards and Data.*

Table 2-2
ALUMINUM EQUIVALENT OF PRIMARY BEAM TOTAL FILTRATION

Operating Voltage (kVp)	Total Filtration (mm Al Equivalent)
Below 50	0.5
50-70	1.5
Above 70	2.5

C. Procedure

Visually inspect the system and determine the aluminum equivalence of the total filtration in the primary beam. This includes the inherent filtration of the X-ray tube, X-ray tube housing, beam-limiting device, and any additional filtration that may have been added in the useful beam (in fluoroscopic systems the tabletop is included as part of the added filtration).

D. Verification of Compliance

The aluminum equivalence of the total filtration must be equal to or greater than the amount specified in Table 2-2.

NEMA Standard 5-15-1979.

.02 Method II—Standard Absorber Method

A. General

This test is to be used when the surveyor cannot remove or see the total filtration equivalence.

Copyright National Electrical Manufacturers Association
Provided by IHS under license with NEMA
No reproduction or networking permitted without license from IHS
Not for Resale

TECHNIQUE SELECTED				READINGS TAKEN	
mA	TIME	(mA) OR mAs	kVp	(mA) OR mAs	kVp
25	2	(25)	↑	(24.5)	82
50	2	(50)		(51)	78
100	.2	20		20.2	80
200	.1	20		20.4	80
300 s	.07	21	80	21	81
300 L	.07	21		21.2	80
400	.05	20		20.4	80
500	.05	25		25.5	78
600	.035	21	↓	21.2	82
25	2	(25)	↑	25	59
50	2	(50)		(50)	58
100	.2	20		20	59
200	.1	20		20	59
300 s	.07	21		20.5	61
300 L	.07	21	60	21.5	62
400	.05	20		19.5	62
500	.05	25		24.5	61
600	.035	21	↓	20.25	60
25	2	(25)	↑	(25)	120
50	2	(50)		(50)	120
100	.2	20		20	117
200	.1	20		20	116
300 s	.07	21	120	—	—
300 L	.07	21		21.25	116
400	.05	20		20.56	117
500	.05	25		26	119
600	.035	21	↓	21.25	117

Fig. 2-3
EXAMPLE OF ROUGH DATA FORM

Copyright National Electrical Manufacturers Association
Provided by IHS under license with NEMA
No reproduction or networking permitted without license from IHS
Not for Resale

ACCURACY REQUIREMENTS:

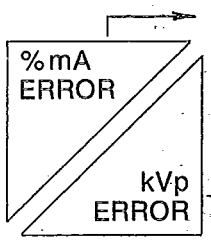

→ MANUFACTURING SPECIFICATION

→ MANUFACTURING SPECIFICATION

LINEARITY REQUIREMENTS:

kVp RANGE OVER WHICH PERCENT mA ERROR BETWEEN mA STATIONS SHALL BE LESS THAN MANUFACTURER'S SPECIFICATION

kVp	mA STATIONS								
	25	50	100	200	300s	300L	400	500	600
50									
60	0 / -1	0 / -2	0 / -1	0 / -1	-2 / +1	-3 / +2	-3 / +2	-2 / +1	-1 / 0
70									
80	-2 / +2	+2 / -2	+1 / 0	+2 / 0	0 / +1	+1 / 0	+2 / 0	+2 / -2	+1 / -2
90									
100									
110									
120	0 / 0	0 / 0	0 / -3	0 / -4		+1 / -4	+2 / -3	+4 / -1	+1 / -3
125									

TUBE MAX RATINGS EXCEEDED, EXPOSURE NOT PERMITTED.

Fig. 2-4
EXAMPLE OF ACCURACY CHART

Copyright National Electrical Manufacturers Association
Provided by IHS under license with NEMA
No reproduction or networking permitted without license from IHS
Not for Resale

Copyright National Electrical Manufacturers Association
Provided by IHS under license with NEMA
No reproduction or networking permitted without license from IHS
Not for Resale

						19.50	+8.3	21.50	+7.5	22.50	+7.1	26.75	+7
												26.50	+6
				16.25	+8.3	19.25	+6.9	21.25	+6.3	22.25	+6.0	26.25	+5
		13.00	+8.3	16.0	+6.7	19.0	+5.5	21.0	+5.0	22.0	+4.8	26.0	+4
10.75	+7.5	12.75	+6.3	15.75	+5.0	18.75	+4.2	20.75	+3.8	21.75	+3.6	25.75	+3
10.50	+5.0	12.5	+4.2	15.5	+3.3	18.5	+2.8	20.5	+2.5	21.50	+2.4	25.50	+2
10.25	+2.5	12.25	+2.1	15.25	+1.7	18.25	+1.4	20.25	+1.3	21.25	+1.2	25.25	+1
10.0	0	12.0	0	15.0	0	18.0	0	20.0	0	21.0	0	25.0	0
9.75	−2.5	11.75	−2.1	14.75	−1.7	17.75	−1.4	19.75	−1.3	20.75	−1.2	24.75	−1
9.50	−5.0	11.50	−4.2	14.50	−3.3	17.50	−2.8	19.50	−2.5	20.50	−2.4	24.50	−2
9.25	−7.5	11.25	−6.3	14.25	−5.0	17.25	−4.2	19.25	−3.8	20.25	−3.6	24.25	−3
		11.00	−8.3	14.00	−6.7	17.0	−5.5	19.0	−5.0	20.0	−4.8	24.0	−4
				13.75	−8.3	16.75	−6.9	18.75	−6.3	19.75	−6.0	23.75	−5
						16.50	−8.3	18.50	−7.5	19.50	−7.1	23.50	−6
												23.25	−7

Actual mAs (High) Percent Error

Selected mAs

Actual mAs (Low) Percent Error

1. Locate selected mAs equal to product of selected mA and selected time.
2. Find percent error corresponding to exposure reading on panel or external meter.

Example: 20 mAs selected; 19.5 read; error equals 2.5 percent.

Fig. 2-5
PERCENT mA ERROR CALCULATOR

6470247 0005687 0

The HVL determinations obtained from the following procedures are to be compared with those illustrated in Table 2-1. The HVL in millimeters of aluminum of the system being tested must be greater than or equal to the values shown in Table 2-1.

B. Equipment

1. Radiation detector.
2. Standard absorber with equivalent filtration of 2.5 millimeters of aluminum.

C. Procedure

1. With the detection device positioned horizontally, an exposure is made at a preselected technique factor of 80 kVp and appropriate mA and time. The reading of the radiation output is recorded.
2. Position a total of 2.5 millimeters of aluminum at the port of the beam-limiting device and repeat the exposure using the same technique factors. Record the radiation output.

For X-ray units operating at low kVp (less than 50) and for mammography units, it will be necessary to use an aluminum absorber of 0.6 millimeters at 49 kVp.

D. Verification of Compliance

Verify that the radiation output in step 2 is greater than or equal to 50 percent of the radiation output in step 1.

NEMA Standard 5-15-1979.

.03 Method III—BRH/FDA Compliance Test

A. General

The HVL determinations obtained from the following procedures are to be compared with those illustrated in Table 2-1. The HVL in millimeters of aluminum of the system being tested must be greater than or equal to the values shown in Table 2-1.

B. Equipment

1. BRH/FDA compliance test stand with accessories (Fig. 2-1).
2. Survey meter adapted for use with stand with an ion chamber.
3. Several sheets of aluminum, each having a thickness of 0.5 or 1.0 millimeter.

C. Procedure

1. Attach the spacer, positioned out of the primary beam, to the test stand. Center the stand on the table. Center the source over the stand and bring the beam-limiting device down into firm contact with the spacer. Select the MANUAL mode of operation (there must not be a cassette in the cassette tray). Insert the beam-defining assembly in slot 1 of the stand with the leaded side up (see Fig. 2-2). Adjust the beam-limiting device so that the X-ray field slightly exceeds the aperture of the beam-defining assembly. Mount the ion chamber at position B with the chamber facing upward. Connect the chamber and meter with the cable provided. Select a tube potential that is commonly used and is in the highest kVp range of the X-ray system.
2. With no added filtration in the beam, make an exposure and record the reading. For all diagnostic X-ray equipment, use Table 2-3 to determine increments of filtration required to perform the half-value layer procedure. Make an exposure and record the reading for each total thickness.

Table 2-3
HIGHEST DESIGN OPERATING RANGE

Total Added Filtration, mm Al		
Below 50 kVp	50-70 kVp	Above 70 kVp
0.5	1.0	1.5
1.0	1.5	2.5
1.5	2.5	3.5
2.0	3.5	4.5

The recorded data is plotted on semi-log graph paper (Examples A and B, Fig. 2-6) and the half-value layer is read directly from the graph.

D. Verification of Compliance

Verify that the half-value layer of the useful beam for a given X-ray tube potential is not less than the values shown in Table 2-1.

NEMA Standard 5-15-1979.

XR 8-2.10 EXPOSURE LOCKOUT WITH VARIABLE FILTRATION

REQUIREMENT—Positive means* shall be provided to assure that at least the minimum filtration needed to achieve the beam quality requirements (see XR 8-2.09) is in the useful beam during each exposure. [See 21 CFR 1020.30(m).]

A. Equipment

Lead blocker (1/8-inch minimum thickness).

* In the case of a system which is to be operated with more than one thickness of filtration, this requirement can be met by a filter interlock with the kilo-voltage selector which will prevent X-ray emission if the minimum required filtration is not in place.

Copyright National Electrical Manufacturers Association
Provided by IHS under license with NEMA
No reproduction or networking permitted without license from IHS
Not for Resale

Copyright National Electrical Manufacturers Association
Provided by IHS under license with NEMA
No reproduction or networking permitted without license from IHS
Not for Resale

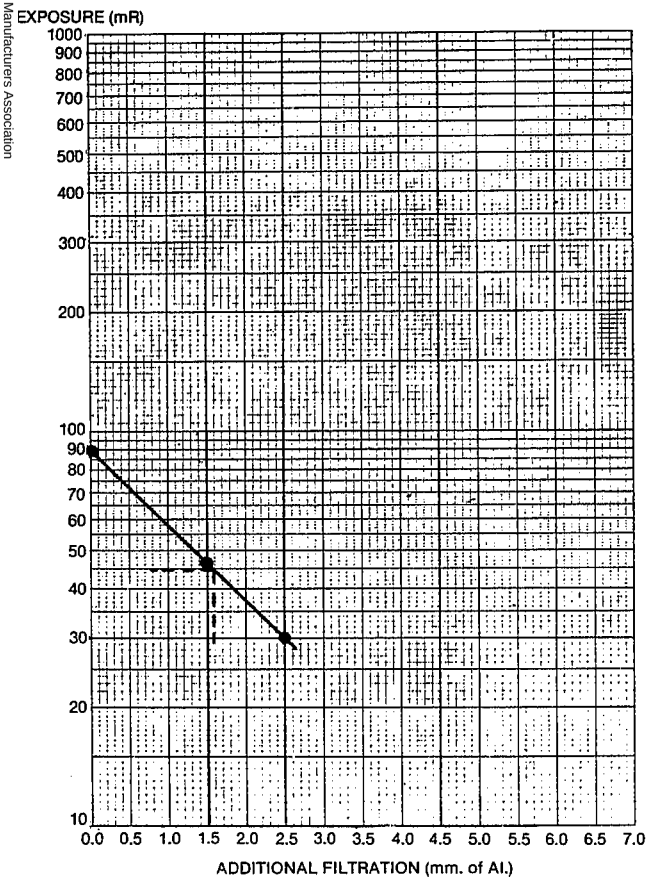

EXAMPLE A

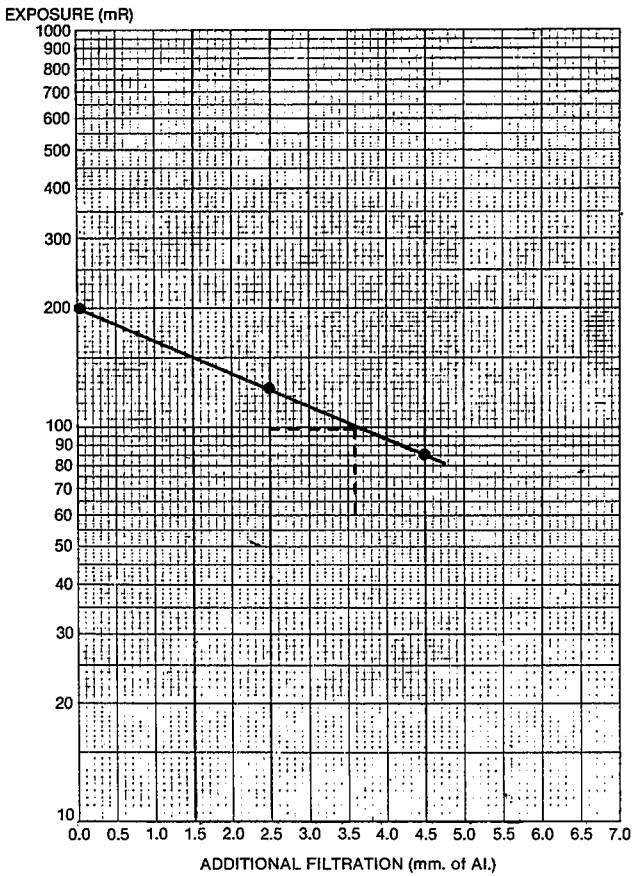

EXAMPLE B

Fig. 2-6
HALF-VALUE LAYER DETERMINATION GRAPHS

B. Procedure

1. Remove all nonpermanent filtration from the useful beam. If system has capability of permanent adjustable filtration, select minimum amount.
2. Block the beam-limiting device with the lead blocker.
3. Starting with the maximum kVp possible, incrementally reduce kVp to a point where exposure lockout no longer occurs; record kVp.
4. Using information supplied by the manufacturer, determine the total filtration in the useful beam.
5. Using Table 2-4, determine the half-value layer of the system at the kVp recorded.
6. Repeat steps 1 through 5 for each level of selectable filtration.
7. If determination of total filtration from the information provided by the manufacturer is not possible, it will be necessary to perform Method III (XR 8-2.09.03) of the half-value layer tests to determine compliance.

C. Verification of Compliance

Confirm that the half-value layer determined in step 5 is greater than or equal to the limits specified in Table 2-1.

NEMA Standard 5-15-1979.

Table 2-4
HALF-VALUE LAYERS AS A FUNCTION OF FILTRATION AND TUBE POTENTIAL FOR DIAGNOSTIC UNITS*

Total Filtration, mm Al	Peak Potential (kVp)									
	30	40	50	60	70	80	90	100	110	120
	Typical Half-value Layers (mm Al)									
0.5	0.36†	0.47†	0.58	0.67	0.76	0.84	0.92	1.00	1.08	1.16
1.0	0.55	0.78	0.95	1.08	1.21	1.33	1.46	1.58	1.70	1.82
1.5	0.78	1.04	1.25†	1.42†	1.59†	1.75	1.90	2.08	2.25	2.42
2.0	0.92	1.22	1.49	1.70	1.90	2.10	2.28	2.48	2.70	2.90
2.5	1.02	1.38	1.69	1.95	2.16	2.37†‡	2.58†‡	2.82†‡	3.06†‡	3.30†‡
3.0	. . .	1.49	1.87	2.16	2.40	2.62	2.86	3.12	3.38	3.65
3.5	. . .	1.58	2.00	2.34	2.60	2.86	3.12	3.40	3.68	3.95

* For full-wave rectified potential.
† Recommended minimum HVL for radiographic units.
‡ Recommended minimum HVL for fluoroscopes.

XR 8-2.11 MINIMUM EXPOSURE TIME FOR AUTOMATIC EXPOSURE CONTROLS

REQUIREMENT—At tube potentials equal to or greater than 50 kVp, an automatic exposure control device shall be able to control times as short as 1/60 second or current-time products as small as 5 mAs, whichever is greater. [See 21 CFR 1020.31(a)(3)(ii).]

.01 Method I—Photodiode Detector Method

A. General

1. The automatic timing device must not be blocked by other than the minimum material used during a typical diagnostic procedure.
2. When the automatic timing device is situated to measure exit radiation from a film cassette, be sure that the cassette used represents the minimum absorption characteristics typically employed.
3. Any image intensifier which cannot be removed from the useful beam must be blocked with a beam absorber. (This method can only be used when the input surface of the image intensifier can be blocked without also blocking the automatic timer.)
4. See test methods for mAs accuracy (XR 8-2.07) and timer accuracy (XR 8-2.06) to measure the required parameters.

B. Equipment

1. BRH pulse counter-timer with photodiode detector probe.
2. Beam absorber.

C. Procedure

1. Remove any grids, extra filters, or other obstructions not typically used from between the source and the automatic timing device. The only obstructions normally in the path should be the table, the beam-limiting device and fixed nonremovable grids, sufficient added filtration to assure beam quality and, where the automatic timing device measures radiation beyond the image plane, a film cassette. Turn on the X-ray system and allow sufficient stabilization time.

Copyright National Electrical Manufacturers Association
Provided by IHS under license with NEMA
No reproduction or networking permitted without license from IHS
Not for Resale

2. Align the diagnostic source assembly with the automatic timing device so that the beam axis intersects the approximate center of the active area.

3. Adjust the settings of the X-ray control for minimum automatic timing of the exposure (i.e., maximum tube potential, current, etc.). Record these settings.

4. For units with image intensifiers which must be left in the useful beam, insert the beam absorber between the input surface of the image intensifier and the automatic timing device.

5. Select an appropriate method for measuring the exposure time and set up the required test instrumentation to make the measurement.

6. Make an exposure and record the exposure time measured.

7. If the measured exposure time is less than or equal to 1/60 second, it is not necessary to measure the total tube current exposure time product for each exposure. If the measured exposure time exceeds 1/60 second then this product must be measured.

8. Make an exposure and record the mAs, time, and mA measured.

D. Verification of Compliance

Verify that the minimum exposure time is 1/60 second or less; or, if the minimum mAs was measured, verify that the mAs value is 5 mAs or less.

NEMA Standard 5-15-1979.

.02 Method II—Control Panel Indicator Method

A. General

1. When the automatic timing device is situated to measure exit radiation from a film cassette, be sure that the cassette used represents the minimum absorption characteristics typically employed.

2. This test can be used only after the mAs (mA and time) function of the X-ray unit has been checked for proper accuracy in accordance with previous test methods.

3. Actual time or mAs is measured by the X-ray unit indicators.

B. Equipment

None.

C. Procedure

1. Remove any grids, extra filters, or other obstructions not typically used from between the source and the automatic timing device. The only obstructions normally in the path should be the table, the beam-limiting device, sufficient added filtration to assure beam quality and, where the automatic timing device measures radiation beyond the image plane, a film cassette. Turn on the X-ray system.

2. Align the diagnostic source assembly with the automatic timing device so that the beam axis intersects the approximate center of the active area.

3. Adjust the settings of the X-ray control for minimum automatic timing of the exposure (i.e., maximum tube potential, current, etc.). Record these settings.

4. For units with image intensifiers which must be left in the useful beam, insert the lead sheet between the input surface of the intensifier and the automatic timing device.

5. Make an exposure and record the exposure time measured.

6. If the measured exposure time is less than or equal to 1/60 second, it is not necessary to measure the total tube current exposure time product for each exposure. If the measured exposure time exceeds 1/60 second, this product must be measured.

7. Make an exposure and record the mA and time measured.

D. Verification of Compliance

Verify and record whether the minimum exposure time is 1/60 second or less, or, if minimum mAs was measured, verify that the minimum mAs value is 5 mAs or less.

NEMA Standard 5-15-1979.

XR 8-2.12 MAXIMUM mAs FOR AUTOMATIC EXPOSURE CONTROLS

REQUIREMENT—When an automatic exposure control is provided, the product of peak tube potential, tube current, and exposure time shall be limited to less than 60 kWs per exposure *or* the product of tube current and exposure time shall be limited to not more than 600 mAs per exposure for tube potentials of 50 kVp or greater and not more than 2000 mAs per exposure for tube potentials of less than 50 kVp. [See 21 CFR 1020.31(a)(3)(iii).]

.01 Method I—Tube Current/ Exposure Time Product

A. General

1. For this test, if the manufacturer specifies an energy limit of 60 kWs, the peak tube potential must be measured. See test method for kVp accuracy, par. XR 8-2.04.

2. The automatic control sensing device should be blocked from the X-ray field with a

Copyright National Electrical Manufacturers Association
Provided by IHS under license with NEMA
No reproduction or networking permitted without license from IHS
Not for Resale

sufficient beam absorber to assure that the backup timer terminates the exposure rather than the automatic exposure control.

3. If the high-voltage cables are inaccessible, the tube current must be tested independently and the exposure time must be measured using the same test parameters as specified here. See test methods for mA accuracy (par. XR 8-2.05) and for timer accuracy (par. XR 8-2.06).

4. Observe maximum range capability of measuring instrumentation.

5. *The heat load placed on the X-ray tube is quite high in this test. Care must be taken not to exceed the heat storage capacity. It will be necessary to establish a time interval between exposures to keep heating below the required limit.*

B. Equipment

Refer to tests for mA accuracy (see par. XR 8-2.05) and timer accuracy (see par. XR 8-2.06).

C. Procedure

1. *Measurement of maximum product of tube current and exposure time*

a. This procedure shall be followed for those machines for which the manufacturer has stated that the backup timer is designed to limit the maximum product of tube current and exposure time. Record the limits the manufacturer has selected.

b. Connect equipment per tube current measurement instructions.

c. Place the beam absorber so that the automatic timing device is completely blocked from the useful beam.

d. If the backup time is adjusted by setting the normal radiographic control, set the exposure time to the maximum permitted and still allow an exposure to be made when the control is set to automatic timing.

e. For X-ray machines which provide an automatic exposure control for peak tube potentials at or above 50 kVp, set the peak tube potential at 50 kVp or at the lowest setting above 50 kVp. Set the tube current, if it can be selected in the automatic mode, to the lowest setting that will permit the 600-mAs limit to be exceeded or will result in the highest mAs value if the highest value does not exceed 600. This will put the least heat load on the X-ray tube. Set all other controls (i.e., density) to settings which will provide the maximum mAs. Record the technique factors and settings of other controls.

f. Make an exposure and record the mAs indicated.

g. Steps C.1.e and C.1.f shall be repeated for other tube current, density control settings, etc., if deemed necessary for assuring compliance.

h. For X-ray machines which provide an automatic exposure control for peak tube potentials below 50 kVp, set the tube potential to the lowest setting. Set the tube current, if it can be selected in the automatic mode, to the lowest setting that will permit the 2000 mAs limit to be exceeded or will result in the highest mAs value. Other controls should be set to provide the maximum mAs. Record the technique factors and settings of other controls.

i. Make an exposure and record the mAs indicated.

j. Steps C.1.h and C.1.i above shall be repeated for any tube current, density control settings, etc., if deemed necessary for assuring compliance.

2. *Measurement of maximum product of peak tube potential, tube current, and exposure time*

a. This procedure shall be followed for those machines for which the manufacturer has stated that the backup timer is designed to limit the maximum product of peak tube potential, tube current, and exposure time.

b. Perform steps C.1.a and C.1.b above.

c. Set the maximum peak tube potential and the maximum tube current, if they can be selected in the automatic mode. Set all other controls (i.e., density) to settings which will provide the maximum mAs. Record the technique factors and control settings.

d. Make an exposure and record the mAs indicated.

e. Repeat steps C.2.b and C.2.c above for the low peak tube potential. Use the minimum tube current setting if it can be selected in the automatic mode.

f. Test other combinations of peak tube potential and tube current if deemed necessary to determine compliance.

D. Verification of Compliance

1. If the maximum mAs is found by separate measurements of tube current and exposure time, multiply the measured values and record the product.

2. If the maximum is specified in terms of energy, multiply the measured values of tube potential, tube current, and exposure time and record the kWs.

3. If the backup timer limits the total mAs per exposure, record the highest mAs value measured or calculated for both the peak tube

Copyright National Electrical Manufacturers Association
Provided by IHS under license with NEMA
No reproduction or networking permitted without license from IHS
Not for Resale
PROBLEM HARD COPY

potential less than 50 kVp and greater than or equal to 50 kVp if applicable.

4. If the backup timer limits the kWs per exposure, record the highest kWs value measured.

5. Verify and record whether the value(s) recorded in steps 3 or 4 above is within the limit stated in the requirement of this test method.

NEMA Standard 5-15-1979.

.02 Method II—Internal Check

A. General

1. For this test, if the manufacturer specifies an energy limit of 60 kWs, the peak tube potential must be measured (see test method for kVp accuracy, par. XR 8-2.04).

2. The automatic timing device shall be blocked from the X-ray field with sufficient beam absorber to assure that the backup timer terminates the exposure rather than the automatic exposure control.

3. This test can only be used once the mAs (mA and time) function of the X-ray unit has been checked for proper accuracy in accordance with previous test methods.

4. Actual time or mAs is measured by the X-ray unit indicator or instruments connected to the unit.

5. The heat load placed on the X-ray tube is quite high in this test. Care must be taken not to exceed the heat storage capacity. It will be necessary to establish a time interval between exposures to keep heating below the required limit.

B. Equipment

1. Oscilloscope (if used).
2. Beam absorber.

C. Procedure

1. This procedure shall be followed for those machines for which the manufacturer has stated that the backup timer is designed to limit the maximum product of tube current and exposure time. Record the limits the manufacturer has selected.

2. If an oscilloscope is used, connect to the terminals specified by the manufacturer.

3. Place the beam absorber so that the automatic timing device is completely blocked from the useful beam.

4. If the backup time is adjusted by setting the exposure time on the control, set the exposure time to the maximum permitted and still allow an exposure to be made when the control is set to automatic timing.

5. For X-ray machines which provide an automatic exposure control for peak tube potentials at or above 50 kVp, set the peak tube potential at 50 kVp or the lowest setting above 50 kVp. Set the tube current, if it can be selected in the automatic mode, to the lowest setting that will permit the 600 mAs limit to be exceeded or will result in the highest mAs value if the highest value does not exceed 600. This will put the least heat load on the X-ray tube. Set all other controls (i.e., density) to settings which will provide the maximum mAs. Record the technique factors and settings of controls.

6. Make an exposure and record the mAs (or mA and time product) indicated.

7. Steps 5 and 6 are to be repeated for other tube current, density control settings, etc., if deemed necessary for assuring compliance.

8. For X-ray machines which provide an automatic exposure control for peak tube potentials below 50 kVp, set the tube potential to the lowest setting. Set the tube current, if it can be selected in the automatic mode, to the lowest setting that will permit the 2000 mAs limit to be exceeded or will result in the highest mAs value. Other controls should be set to provide the maximum mAs. Record the technique factors and settings of controls.

9. Make an exposure and record the mAs (or mA and time) indicated.

10. Steps 8 and 9 are to be repeated for other tube current, density control settings, etc., if deemed necessary for assuring compliance.

D. Verification of Compliance

1. If the maximum mAs is found by separate measurements of tube current and exposure time, multiply the measured values and record the product.

2. If the backup timer limits the total mAs per exposure, record the highest mAs value measured or calculated for both the peak tube potential less than 50 kVp and greater than or equal to 50 kVp if applicable.

3. Verify and record whether the value(s) recorded in step 2 above is within the limit stated in the requirement of this test method.

NEMA Standard 5-15-1979.

XR 8-2.13 ACTUAL VERSUS INDICATED SOURCE-TO-IMAGE DISTANCE (SID)

REQUIREMENT—Means shall be provided to indicate when the axis of the X-ray beam is perpendicular to the plane of the image receptor, to align the center of the X-ray field with respect to the center of the image receptor to within 2 percent of the source-to-image

Copyright National Electrical Manufacturers Association
Provided by IHS under license with NEMA
No reproduction or networking permitted without license from IHS
Not for Resale

distance (SID), and to indicate the SID to within 2 percent. [See 21 CFR 1020.31(e)(1).]

.01 Method I—Direct Measurement Method

A. General

In order to perform this test, it is necessary that the focal spot location be known.

B. Equipment

Graduated scale.

C. Procedure

1. Set the tube unit to an appropriate SID and record this value.
2. Using the graduated scale measure the distance from the plane of the image receptor to the surface of the tabletop and record this distance as distance A.
3. Using the graduated scale measure the distance from the tabletop to the bottom of the beam-limiting device and record this distance as distance B.
4. Add distances A and B to the known focal spot location; this quantity is the actual SID.
5. Multiply the actual SID determined in step 4 by 2 percent and record.

D. Verification of Compliance

The indicated value of the SID recorded in step 1 must fall within the value of the actual SID determined in step 4 plus or minus the value determined in step 5.

NEMA Standard 5-15-1979.

.02 Method II—Triangulation Method

A. General

1. The image of the radiation field on the film must be of uniform density with sharply defined edges.
2. The graduated template is utilized to minimize the amount or error introduced into the measurement and calculation of SID.

B. Equipment

1. Manufacturer's recommended test stand.
2. Cassettes with film or direct-print paper.
3. Graduated template.

C. Procedure

1. Align the tube unit with the image receptor and select an appropriate SID with the normal operating aids (detents, scales, lights, etc.) provided.
2. Load the cassette and insert into the image receptor.
3. Position the test stand according to the manufacturer's instructions.
4. Load a second cassette and place in the designated position on the test stand. Make certain that the graduated template is in a position above the second cassette (see Fig. 2-7).
5. Select the proper technique factors, make an exposure, and develop the film or direct-print paper.
6. Calculate the magnification factor by measuring the distance between the same two points on the graduated template image on each of the two films. The two points chosen must be as far apart as possible.

Divide the larger measurement by the smaller measurement to determine the magnification factor.

7. If the source-to-test-stand film distance is known, calculate the actual SID by multiplying the magnification factor by the source-to-test-stand film distance.
8. If the source-to-test-stand film distance is *not* known, measure the actual distance from the graduated template position to the test stand film plane (distance Z—see Fig. 2-7).
9. Calculate the source-to-template distance (distance X) using the following formula:

$$\frac{A}{B} = \frac{X}{X + Z} \text{ or } X = \frac{A\,Z}{B - A}$$

where

A = two points on graduated template

B = magnification of the same two points on the graduated template

10. Calculate the source-to-test-stand film distance by adding the distance X and the distance Z. Multiply the source-to-test-stand film distance by the magnification factor determined in step 6 to determine the SID.

D. Verification of Compliance

Verify that the indicated value of SID is within 2 percent of the actual value of SID.

NEMA Standard 5-15-1979.

XR 8-2.14 VISUAL DEFINITION (RADIOGRAPHIC) OF X-RAY LIGHT FIELD

REQUIREMENT—Means shall be provided for visually defining the perimeter of the X-ray field. The total misalignment of the edges of the visually defined field with the respective edges of the X-ray field along either the length or width of the visually defined field shall not

Copyright National Electrical Manufacturers Association
Provided by IHS under license with NEMA
No reproduction or networking permitted without license from IHS
Not for Resale
PROBLEM HARD COPY

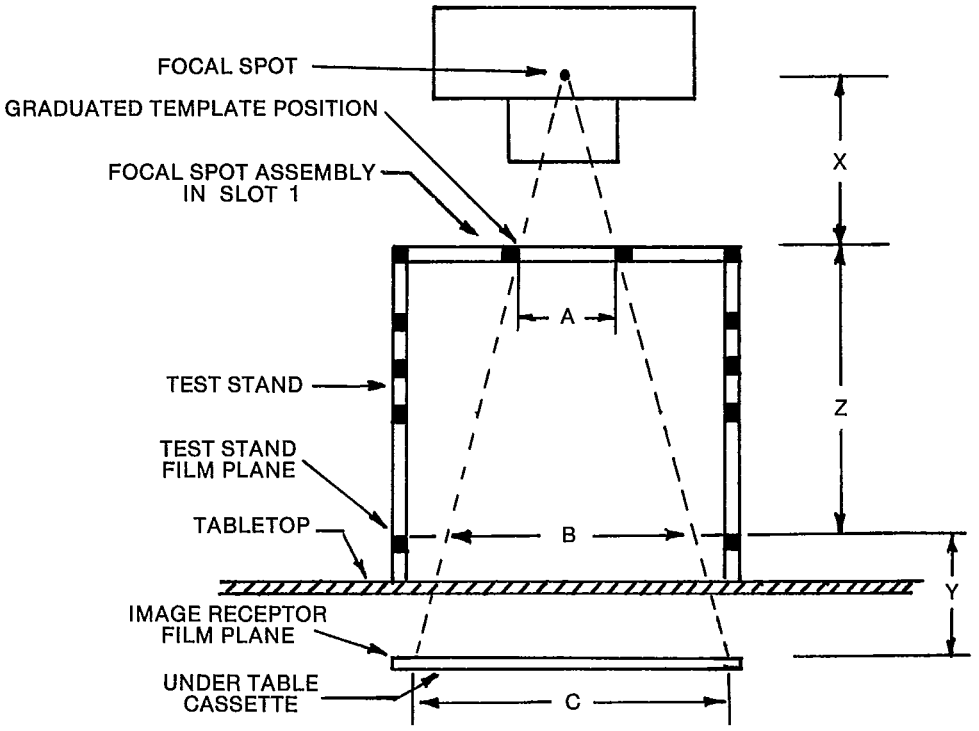

EXAMPLE:

Let A = 2

$$B = 3\frac{3}{8} = \frac{27}{8} = \frac{54}{16}$$

$$C = 3\frac{13}{16} = \frac{61}{16}$$

$$Z = 14\frac{7}{16} = \frac{231}{16}$$

$$X + Z = 21 + 14\frac{7}{16}$$

$$= 35\frac{7}{16} = \frac{567}{16}$$

$$X+Z+Y = 35\frac{7}{16} + 4\frac{19}{32}$$

$$= 40\frac{1}{32}$$

$$\frac{A}{B} = \frac{X}{X+Z}$$

$$\frac{2}{\frac{27}{8}} = \frac{X}{X+\frac{231}{16}}$$

$$2X + \frac{231}{8} = \frac{27X}{8}$$

$$\frac{231}{8} = \frac{27X}{8} - \frac{16X}{8}$$

$$\frac{231}{8} \cdot \frac{8}{11} = X$$

$$X = 21$$

$$\frac{B}{C} = \frac{X+Z}{X+Z+Y}$$

$$\frac{\frac{54}{16}}{\frac{61}{16}} = \frac{\frac{567}{16}}{\frac{567}{16} + Y}$$

$$\frac{54}{16} \cdot \frac{567}{16} + \frac{54Y}{16} = \frac{567}{16} \cdot \frac{61}{16}$$

$$\frac{54Y}{16} = \frac{567}{16}\left[\frac{61}{16} - \frac{54}{16}\right]$$

$$Y = \frac{567}{16} \cdot \frac{7}{16} \cdot \frac{16}{54}$$

$$Y = 4\frac{19}{32}$$

Fig. 2-7
DETERMINATION OF SID

Copyright National Electrical Manufacturers Association
Provided by IHS under license with NEMA
No reproduction or networking permitted without license from IHS
Not for Resale

exceed 2 percent of the distance from the source to the center of the visually defined field when the surface upon which it appears is perpendicular to the axis of the X-ray beam. (See 21 CFR 1020.31(d)(2).]

.01 Method I—BRH/FDA Compliance Test Method

A. Equipment Required

1. BRH/FDA compliance test stand (including slide assembly).
2. Four metal marker strips.
3. Plastic cassette, loaded with direct-print paper or film.

B. Procedure

1. Attach the spacer, positioned out of the primary beam, to the test stand. Center the stand on the table. Center the source over the stand, assure by the means provided that the axis of the X-ray beam is perpendicular to the plane of the image receptor, and bring the beam-limiting device down into firm contact with the spacer. Select the MANUAL mode of operation (there must not be a cassette in the cassette tray).

2. Insert the slide assembly, grid side up, into slot 6 of the test stand and the focal spot assembly into slot 1 (Fig. 2-2). Place a cassette loaded with direct-print paper or film into the slide assembly.

3. Adjust the collimator such that no part of the light field intersects any portion of the top of the test stand. (Further collimation to a light field of less than 15 by 20 centimeters [6 by 8 in] on the slide assembly grid may be desirable to assure that the X-ray field will be fully contained on the direct-print paper or film in the slide assembly.)

4. Position the outer edge of each metal strip to correspond with each side of the light field. One end of the metal strip shall extend to the centerline of the respective grid arm.

5. Select proper technique factors and make an exposure (may require several exposures to obtain 1 R to the direct-print paper).

6. Develop the direct-print paper or film.

C. Verification of Compliance

For determination of misalignment, compare the edges of the X-ray field to the edges of the light field as defined by the outer edges of the metal strips. On each side of the rectangular fields, measure the separation between the X-ray field and the outside edge of the image of the respective metal strip. Sum these measured separations for opposite sides of the X-ray field to yield a total misalignment in the length and in the width dimensions. Record the length misalignment and width misalignment, both without regard to sign (see par. D below and Fig. 2-8).

D. Calculations—Calculate the source-to-image distance (SID) per the following formula (to slot 6) as the indicated source-to-tabletop distance minus 4.7 centimeters (1.85 in) and record. Calculate 2 percent of this SID and record. Both the length and the width misalignment must be less than 2 percent of SID (to slot 6).

$$\frac{2.5}{S} = \frac{X}{X + 13.95}$$

$$2.5X + (2.5)\,13.95 = X\,S$$

$$(2.5)\,13.95 = X\,S - 2.5X \qquad \text{See Fig. 2-9.}$$

$$34.875 = X\,(S - 2.5)$$

$$X = \frac{34.875}{S - 2.5}$$

The misalignments are calculated:

Length misalignment = $L_1 + L_2 \leqslant 2\%$ SID

Width misalignment = $W_1 + W_2 \leqslant 2\%$ SID

Calculate 2 percent of the measured SID. Each of the misalignments, length or width, must be less than or equal to 2 percent of the measured SID for compliance.

NEMA Standard 5-15-1979.

.02 Method II—Metal Marker Method

A. General

The actual versus indicated source-to-image distance (SID) test must be performed prior to attempting this test.

B. Equipment

1. Plastic cassette with direct-print paper or film.
2. Radio-opaque markers.*

C. Procedure

1. Adjust the source assembly and the beam-limiting device so that they are approximately centered over the table and perpendicular to the tabletop. Then position the beam-limiting device to the SID previously determined and record the indicated value.

* Each marker is approximately 1/32-inch galvanized sheet metal having the dimensions of 1.5 by 1.5 inches.

Copyright National Electrical Manufacturers Association
Provided by IHS under license with NEMA
No reproduction or networking permitted without license from IHS
Not for Resale

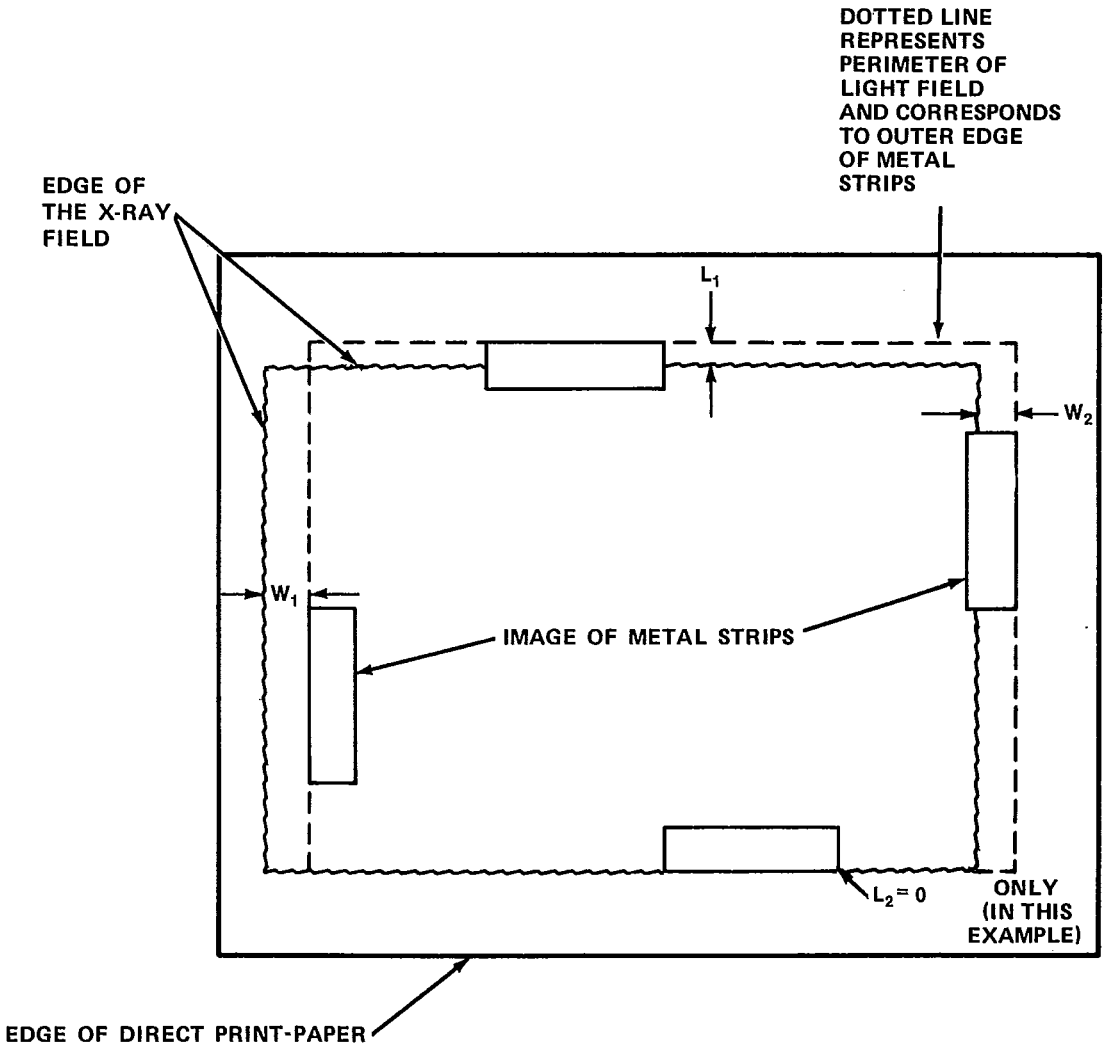

Fig. 2-8

Copyright National Electrical Manufacturers Association
Provided by IHS under license with NEMA
No reproduction or networking permitted without license from IHS
Not for Resale

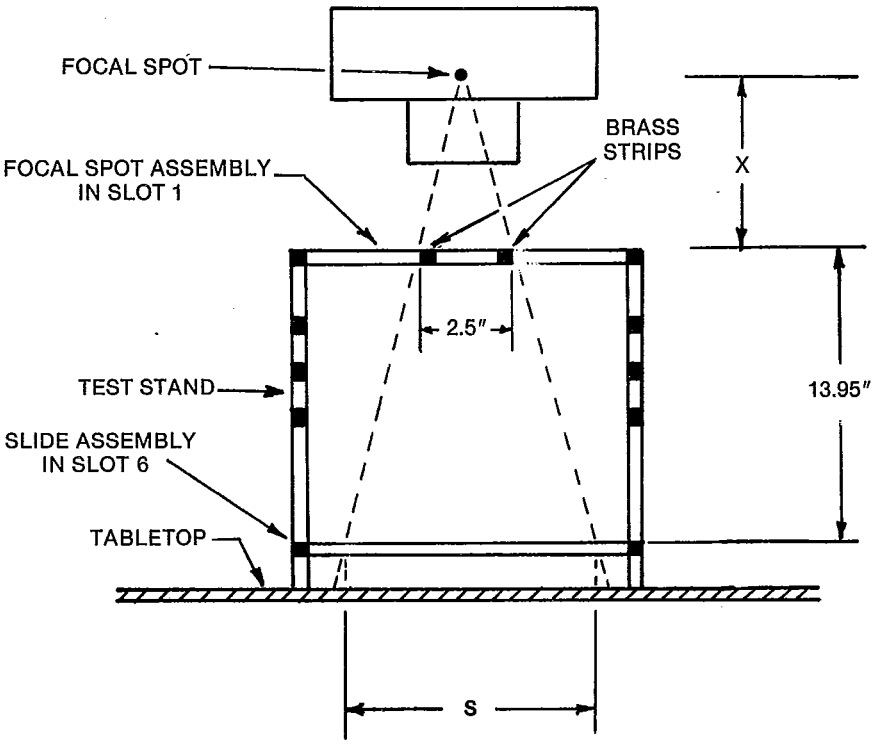

Fig. 2-9
DETERMINATION OF SID

Copyright National Electrical Manufacturers Association
Provided by IHS under license with NEMA
No reproduction or networking permitted without license from IHS
Not for Resale

2. Insert the cassette and turn on the light field.**

Adjust the beam-limiting device to the next indexed size smaller than the cassette size being used.

3. Position the outer edge of each metal marker on the tabletop to correspond with each side of the light field (Fig. 2-10).

4. Select the appropriate technique factors and make an exposure.

5. Develop film or direct-print paper.

** Make a note to record the field size indicated on the dial of the beam-limiting device for the SID being used.

C. Verification of Compliance

For determination of misalignment, compare the edges of the X-ray field to the edges of the light field as defined by the outer edges of the metal strips. On each side of the rectangular fields, measure the separation between the X-ray field and the outside edge of the image of the respective metal strip. Sum these measured separations for opposite sides of the X-ray field to yield a total misalignment in the length and in the width dimensions. Record the length misalignment and width misalignment, both without regard to sign (see par. D below and Fig. 2-8).

D. Calculations—Calculate the SID per the following formula (to slot 6) as the indicated source-to-tabletop distance minus 4.7 centimeters (1.85 in) and record. Calculate 2 percent of this SID and record. Both the length and the width misalignment must be less than 2 percent of SID (to slot 6).

$$\frac{2.5}{S} = \frac{X}{X + 13.95}$$

$$2.5X + (2.5)\,13.95 = X\,S$$

$$(2.5)\,13.95 = X\,S - 2.5X \qquad \text{See Fig. 2-9.}$$

$$34.875 = X\,(S - 2.5)$$

$$X = \frac{34.875}{S - 2.5}$$

The misalignments are calculated:

$$\text{Length misalignment} = L_1 + L_2 \leqslant 2\%\ \text{SID}$$

$$\text{Width misalignment} = W_1 + W_2 \leqslant 2\%\ \text{SID}$$

Calculate 2 percent of the SID. Each of the misalignments, length or width, must be less than or equal to 2 percent of the SID for compliance.

NEMA Standard 5-15-1979.

.03 Method III—Alternate Test Stand Method

A. General

1. The image of the radiation field on the film must be of uniform density with sharply defined edges.

2. The graduated template is utilized to minimize the amount of error introduced into the measurement of the X-ray field size.

3. The actual versus indicated source-to-image distance (SID) must be determined prior to performing this test.

B. Equipment

1. Manufacturer's recommended test stand.
2. Cassettes and film.
3. Graduated template.

C. Procedure

1. Align the tube unit and image receptor and set the SID with the normal operating aids (detents, scales, lights, etc.).

2. Load cassette and insert into image receptor.

3. Close shutters to a size smaller than that of the cassette placed into the image receptor.

4. Position the test stand in accordance with the manufacturer's instructions.

5. Energize the field light and record or define the position of the four light field edges as shown on the graduated template or position four metal markers such that the outer edge of each metal marker corresponds to an edge on each side of the light field, or both.

6. Select proper technique factors, make an exposure, and develop film.

D. Verification of Compliance

1. Calculate 2 percent of the actual SID and record.

2. Compare the edges of the X-ray field to the edges of the light field as defined by the outer edges of the metal markers or by the graduated scale.

3. Measure the distance between the edges of the two fields for each side of the rectangular fields (see Fig. 2-8).

4. Arithmetically sum the misalignment of opposite sides, regardless of sign, of the rectangles, to yield misalignment in each of the two directions.

$$\text{Length misalignment} = L_1 + L_2 \leqslant 2\%\ \text{SID}$$

$$\text{Width misalignment} = W_1 + W_2 \leqslant 2\%\ \text{SID}$$

Copyright National Electrical Manufacturers Association
Provided by IHS under license with NEMA
No reproduction or networking permitted without license from IHS
Not for Resale

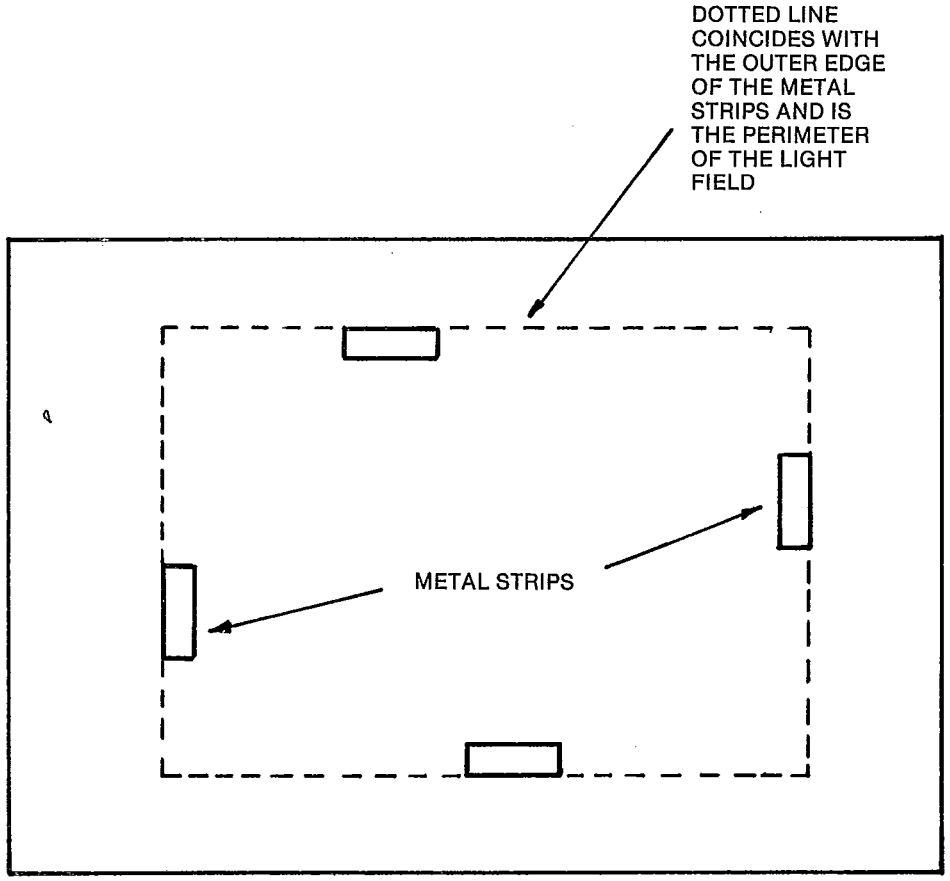

Fig. 2-10

Copyright National Electrical Manufacturers Association
Provided by IHS under license with NEMA
No reproduction or networking permitted without license from IHS
Not for Resale

Both the length and the width misalignment must be less than 2 percent SID as calculated in step 1.

NEMA Standard 5-15-1979.1/3

XR 8-2.15 INTENSITY OF LIGHT FIELD ILLUMINATION

REQUIREMENT—When a light localizer is used to define the X-ray field, it shall provide an average illumination of not less than 160 lux (15 footcandles) at 100 centimeters or at the maximum source-to-image distance (SID), whichever is less. The average illumination shall be based on measurements in the approximate center of each quadrant of the light field. [See 21 CFR 1020.31(d)(2)(ii).]

.01 Method I—Direct Test

A. General

1. Make certain that all surfaces in the light path are clean.
2. Reduce ambient light level as much as is feasible.

B. Equipment

Photometer capable of measuring 160 lux (15 footcandles).

C. Procedure

1. Place the photometer on the tabletop and set the diagnostic source assembly such that the sensing area of the photometer is at 100 centimeters or the maximum SID, whichever is less.
2. Open the beam-limiting device to assure that each quadrant of the light field is larger than the sensing area of the photometer.
3. Refer to the manufacturer's instructions for proper use of the photometer.
4. Turn on the light localizer.
5. At or near the center of a light field quadrant, determine the illuminance by subtracting the ambient light level from the corresponding light level as measured when the light localizer is energized. Do not move the photometer between measurements.
6. Repeat the procedure for the remaining three quadrants.
7. Determine the average illuminance of the four light field quadrants.
8. Record the model number, serial number, and date of calibration of test instrument.

D. Verification of Compliance

Verify that the average illumination is not less than 160 lux (15 footcandles).

NEMA Standard 5-15-1979.

.02 Method II—Indirect Test

A. General

1. This indirect test is feasible after the correlation between light output and voltage is made; the manufacturer then specifies a voltage to be measured or adjusted, or both.
2. Make certain that all surfaces in the light path are clean and unobstructed.

B. Equipment

Digital voltmeter.

C. Procedure

1. Remove trim covers to gain access to the lamp socket.
2. Verify that the specified lamp is in the socket.
3. With the light field energized, measure the voltage across the lamp socket terminals.
4. Record the voltage measured.
5. Record the model number, serial number and calibration date of the digital voltmeter.

D. Verification of Compliance

The voltage recorded shall be within the tolerances specified by the manufacturer.

NEMA Standard 5-15-1979.

XR 8-2.16 MINIMUM FIELD SIZE

REQUIREMENT—Minimum field size at 100 centimeters (radiographic) or the maximum source-to-image distance (SID) (fluoroscopic) shall be less than or equal to 5 by 5 centimeters [See 21 CFR 1020.31(d)(1), 1020.31(e)(2), and 1020.32 (b)(2).]

.01 Method I—Film Method

A. General

1. The following test is to be used for radiographic, fluoroscopic, and spot-film devices.
2. This procedure need not be performed if it is apparent by visual means that the beam-limiting device can be adjusted to a size less than 5 by 5 centimeters at the specified SID.

B. Equipment

1. Cassette.
2. X-ray film or direct-print paper.

C. Procedure 1—Radiographic and Spot-film Devices

1. Adjust the maximum SID obtainable (spot-film devices or 100-centimeter radiographic devices).

Copyright National Electrical Manufacturers Association
Provided by IHS under license with NEMA
No reproduction or networking permitted without license from IHS
Not for Resale

2. Adjust the beam-limiting device to the smallest field size obtainable.
3. Load cassette and set proper technique factors.
4. Make an exposure.
5. Process film.

D. Procedure 2—Fluoroscopic

1. Set fluoroscopic system for maximum SID and lock into position.
2. Remove all compression cones from the beam.
3. With the X-ray beam off, attach beam attenuator to the input surface of the image receptor.
4. Attach cassette to the bottom of the attenuator.
5. Close shutters as far as possible.
6. Set technique factors to assure proper exposure of the film.
7. Make exposure.
8. Process film.

E. Verification of Compliance

Measure the X-ray field produced on film and verify that the field size is less than or equal to 5 by 5 centimeters.

NEMA Standard 5-15-1979.

.02 Method II—Visual Method

A. General

1. The following tests are to be used for radiographic, fluoroscopic, and spot-film devices.
2. These procedures need not be performed if it is apparent by visual means that the beam-limiting device can be adjusted to a size less than or equal to 5 by 5 centimeters at the specified source-to-image distance (SID).
3. These tests attempt to minimize radiation exposures as well as film processing by utilizing light field visual display, or image display, or visual mechanical movement.

B. Equipment

Beam attenuator.

C. Procedure 1—Radiographic

1. Set the tube unit at a distance of 100 centimeters from the image receptor.
2. Pull out the bucky tray and place an unloaded cassette into the tray. *Do not reinsert bucky tray.*
3. Position source assembly over film cassette in the extended bucky tray.
4. Actuate the light field and close shutters to minimum size. If the light is completely blocked from the image receptor no further test is required.
5. Measure the light field size on the cassette in the extended bucky tray.

D. Verification of Compliance

Measured field size must be less than or equal to 5 by 5 centimeters.

E. Procedure 2—Spot-film/Fluoroscopic

1. Set SID for maximum obtainable and lock in place.
2. Position beam attenuator to intercept entire X-ray beam.
3. Set appropriate technique factors (both spot-film and fluoroscopic).
4. Close shutters to smallest size obtainable and make an exposure.
5. Verify on viewing device that there is no visual indication of radiation. If any radiation field is discernible, Method I must be utilized to determine minimum field size.

F. Verification of Compliance.

Verify that no visual indication of the radiation field is discernible.

NEMA Standard 5-15-1979.

XR 8-2.17 X-RAY FIELD/RECEPTOR CENTER ALIGNMENT

REQUIREMENT—Means shall be provided to align the center of the X-ray field with respect to the image receptor to within 2 percent of the source-to-image distance (SID). [See 21 CFR 1020.31(e)(1).]

A. General

1. All exposures taken during this test must have a uniform film density of approximately 1.0.
2. Actual versus indicated SID must be determined prior to performing this test.

B. Equipment

Radiographic cassette loaded with film (8 by 10 inches).

C. Procedure

1. Load cassette with film and place into the bucky tray.
2. Assure that the X-ray beam is perpendicular to the image receptor and centered over the bucky tray.
3. Set the SID to the value determined in the actual versus indicated SID test.

Copyright National Electrical Manufacturers Association
Provided by IHS under license with NEMA
No reproduction or networking permitted without license from IHS
Not for Resale

4. Reduce the X-ray field to approximately 6 by 8 inches.
5. Make an exposure and develop film.
6. To determine as accurately as possible the corners of the image recorded on the film, locate two points on each of the four sides of the image. Through the two points on each side draw a straight line. These four lines when extended intersect making a rectangle which is a close approximation of the actual X-ray field. Draw a diagonal across the image to determine the center of the X-ray image.
7. To determine the center of the X-ray film draw diagonals across the film (the point where these two lines cross is the center of the film), or fold the film into quarters (the point where the two folds cross is the center of the film).
8. The distance from the film center mark to the image center mark is measured and recorded as the linear displacement or misalignment of the centers of the X-ray field and the image receptor.

D. Verification of Compliance

Verify that this distance is less than or equal to 2 percent of the SID. NEMA Standard 5-15-1979.

XR 8-2.18 INDICATION OF X-RAY FIELD SIZE

REQUIREMENT—Means shall be provided on the beam-limiting device to indicate field size in the image receptor plane to within 2 percent of the source-to-image distance (SID). [See 21 CFR 1020.31(e)(1).]

A. General

The actual versus indicated SID test must be performed prior to beginning this test.

B. Equipment

A 24- by 30-centimeter or a 10- by 12-inch cassette with film.

C. Procedure

1. Set the SID to the value determined in the actual versus indicated SID test.
2. Center the film cassette in the cassette tray and insert into position.
3. Adjust the field size to 15 by 15 centimeters or 8 by 8 inches by means of the numerical indicators on the beam-limiting device.
4. Make an exposure and develop film.
5. Measure and record the length and width dimensions of the image.

D. Verification of Compliance

The deviation of any of the recorded dimensions must not exceed 2 percent of the SID set in step 1.

NEMA Standard 5-15-1979.

XR 8-2.19 POSITIVE BEAM LIMITATION (PBL)

REQUIREMENT—Means shall be provided for positive-beam limitation (PBL) which will, at the source-to-image distance (SID) for which the device is designed, either cause automatic adjustment of the X-ray field in the plane of the image receptor to the image receptor size within five seconds after insertion of the image receptor or, if adjustment is accomplished automatically in a time interval greater than 5 seconds or is manual, will prevent production of X-rays until such adjustment is completed. At SID's at which the device is not intended to operate, the device shall prevent the production of X-rays. [See 21 CFR 1020.31(e)(2).]

A. General

The PBL requirement must be met if both the beam axis and table angulation are within plus or minus 10 degrees of the horizontal or vertical and the film is used in the cassette tray.

B. Equipment

Large size cassette.

C. Procedure

1. Set the source assembly to a SID where the PBL system is intended to operate.
2. Place the largest film cassette with which the system is intended to operate into the cassette tray; do not insert cassette tray at this time.
3. Turn on the light localizer and adjust the beam-limiting device to the smallest obtainable field size.
4. Insert the cassette tray and measure the time elapsed from the insertion of the cassette tray with the cassette inserted to the adjustment of the X-ray field to the image receptor size.
5. The adjustment must be accomplished within 5 seconds.
6. If the adjustment is not accomplished within 5 seconds or the beam-limiting device is of the manual type, select low-range values of tube potential and tube current and attempt to make an exposure. The production of X-rays must be prevented until the PBL adjustment is completed.
7. Move the source assembly to a SID where the PBL system is not intended to operate (see manufacturer's specifications) and attempt to make an exposure. Exposures must not be possible.

NEMA Standard 5-15-1979.

Copyright National Electrical Manufacturers Association
Provided by IHS under license with NEMA
No reproduction or networking permitted without license from IHS
Not for Resale

XR 8-2.20 X-RAY FIELD LIMITATION AND ALIGNMENT

REQUIREMENT—The X-ray field size in the plane of the image receptor, whether automatically or manually adjusted, shall be such that neither the length nor the width of the X-ray field differs from that of the image receptor by greater than 3 percent of the source-to-image distance (SID) and that the sum of the length and width differences without regard to sign be no greater than 4 percent of the SID, when the equipment indicates that the beam axis is perpendicular to the plane of the image receptor. [See 21 CFR 1020.31(e)(2)(ii).]

.01 Method I—BRH/FDA Test Stand Method

A. Equipment

1. BRH/FDA compliance test stand with accessories.
2. Slide assembly.
3. Plastic cassette containing a sheet of direct-print paper or X-ray film.
4. Ruler.
5. Cassette (preferably 3 by 10 inches or smaller).

B. Procedure

1. Using the means provided, align the source assembly such that the beam axis is perpendicular to the image receptor.
2. Place the test stand on the table.
3. Position the spacer so as not to intersect the primary beam and secure with the pushbutton connectors.
4. Center the source assembly over the test stand using the means provided, e.g., the light field used to define the X-ray field.
5. Bring the source assembly down into firm contact with the spacer.
6. Center the cassette tray with the source assembly using the means provided, e.g., bucky light.
7. Insert the plastic cassette into the slide assembly. Then insert the slide assembly into slot 5. (See Fig. 2-2.)
8. Center the film cassette in the cassette tray and insert into position. If the positive-beam limitation will not operate at this SID, raise the source assembly and lock in position at the first operable SID.
9. Make an exposure. Develop the image. Measure and record the length and width dimensions of the image.
10. Calculate the field size correction factor as the SID/A where:

a. SID is the indicated source-to-image-receptor distance, and

b. A is the indicated source-to-tabletop distance less 7.7 inches. Multiply each of the measured dimensions by the correction factor.

$$\text{X-ray field length at under-table image receptor} = \frac{\text{SID}}{\text{A}} \times \text{(X-ray field length at slot 5)}$$

$$\text{X-ray field width at under-table image receptor} = \frac{\text{SID}}{\text{A}} \times \text{(X-ray field width at slot 5)}$$

Determine the difference without regard to sign between the corrected length and width dimensions and the corresponding cassette film size dimensions (8 by 10, 5 by 7, etc.). Each of these differences must be less than 3 percent of the SID, and the sum of these differences must be less than 4 percent of the SID.

NEMA Standard 5-15-1979.

.02 Method II—Alternate Test Stand Method

A. General

Prior to performing this test the magnification factor must be determined in accordance with the X-ray/Light Field Alignment Test—Method III.

B. Equipment

1. Manufacturer's recommended test stand.
2. Cassette with film.

C. Procedure

1. Align the tube unit and image receptor and set SID to the value determined in the actual versus indicated SID test.
2. Insert empty 8- by 10-inch cassette into bucky tray.
3. Position test stand in accordance with manufacturer's instructions.
4. Load a second cassette and place in the designated position.
5. Select the proper technique factors, make an exposure, and develop film.
6. Measure the length and width of the X-ray image on the film.
7. Multiply each measurement by the magnification factor previously determined.

D. Verification of Compliance

Verify that the X-ray field size in the plane of the image receptor does not differ from that of the image receptor by greater than 3 percent of the SID and that the sum of the length and

Copyright National Electrical Manufacturers Association
Provided by IHS under license with NEMA
No reproduction or networking permitted without license from IHS
Not for Resale

width differences without regard to sign is not greater than 4 percent of the SID.

NEMA Standard 5-15-1979.

.03 Method III—Cassette Method

A. General

This procedure can be used only when a capability is provided for overriding positive-beam limitation.

B. Equipment

1. Large cassette with film.
2. Small cassette, empty.

C. Procedure

1. Insert empty smaller cassette into bucky tray.
2. Switch system to the override mode.
3. Remove the smaller cassette and insert the loaded large cassette.
4. Select the proper technique factors, make an exposure, and develop film.
5. Measure the length and width of the X-ray image on the film.

D. Verification of Compliance

Verify that the X-ray field size in the plane of the image receptor does not differ from that of the image receptor (smaller cassette) by greater than 3 percent of the SID and that the sum of the length and width differences without regard to sign is not greater than 4 percent of the SID.

NEMA Standard 5-15-1979.

XR 8-2.21 RETURN TO POSITIVE-BEAM LIMITATION (PBL) WITH IMAGE RECEPTOR CHANGE

REQUIREMENT—Return to positive-beam limitation (PBL) shall occur with a change in image receptor size. [See 21 CFR 1020.31(e)(2)(iii).]

A. Equipment

Medium size cassette.

B. Procedure

1. Select positive-beam limitation mode.
2. Insert the medium size cassette into the bucky tray and record the field size indication.
3. Collimate down to a field size smaller than the cassette.
4. Remove and reinsert the cassette.

C. Verification of Compliance

Verify that the system has returned to positive-beam limitation. Record the field size indication and verify that it is equal to the previously recorded field size.

NEMA Standard 5-15-1979.

XR 8-2.22 KEY LOCK TO POSITIVE-BEAM LIMITATION OVERRIDE

REQUIREMENT—If a capability is provided to override positive-beam limitation, a key shall be required to override the positive mode, and the key shall be captive while the positive mode is overridden. [See 21 CFR 1020.31(e)(2)(v).]

A. General

This test can be performed only if a capability is provided for overriding positive-beam limitation.

B. Equipment

None.

C. Procedure

1. Verify that a key is required in order to select the override mode.
2. Select the override mode using the key.
3. Verify that while in this mode the key is captive.

NEMA Standard 5-15-1979.

XR 8-2.23 FIELD LIMITATION FOR ONE IMAGE RECEPTOR SIZE

REQUIREMENT—Radiographic equipment designed for only one image receptor size at a fixed source-to-image distance (SID) shall be provided with means to limit the field at the plane of the image receptor to dimensions no greater than those of the image receptor, and to align the center of the X-ray field with the center of the image receptor to within 2 percent of the SID. [See 21 CFR 1020.31(f)(2).]

A. General

1. Technique factors must be selected to assure a film density of approximately 1.0.
2. Prior to performing this test the actual SID must be determined.

B. Equipment

1. Cassette (if required).
2. Film.

C. Procedure

1. If applicable, align the X-ray source to the image receptor using the normal operator's procedure.
2. Insert loaded cassette (or advance film), make exposure, and develop film.
3. If the image lies within all four edges of the film (meeting requirement), determine the center of the X-ray film by drawing diagonals

Copyright National Electrical Manufacturers Association
Provided by IHS under license with NEMA
No reproduction or networking permitted without license from IHS
Not for Resale

across the film (the point where the two lines cross is the center of the film), or fold the film into quarters (the point where the two folds cross is the center of the film).

D. Verification of Compliance

1. All four edges of the X-ray field must lie within the film.
2. The distance between the centers of the X-ray field and the film must be less than 2 percent of the SID.

NEMA Standard 5-15-1979.

XR 8-2.24 FLUOROSCOPIC X-RAY FIELD LIMITATION

REQUIREMENT

A. Nonimage-intensified Fluoroscopy

The X-ray field by nonimage-intensified fluoroscopic equipment shall not extend beyond the entire visible area of the image receptor. This requirement applies to field size during fluoroscopic procedures.

B. Image-intensified Fluoroscopy

1. During fluoroscopic procedures, neither the length nor the width of the X-ray field in the plane of the image receptor shall exceed the visible area of the image receptor by more than 3 percent of the source-to-image distance (SID). The sum of the excess length and the excess width shall be no greater than 4 percent of the SID.
2. Compliance shall be determined with the beam axis perpendicular to the image receptor. For rectangular X-ray fields used with circular image receptors, the error in alignment shall be determined along the length and width dimensions of the X-ray field which pass through the center of the visible area of the image receptor. [See 21 CFR 1020.32(b).]

.01 Method I—BRH/FDA Test Stand Method

A. Equipment

1. BRH/FDA compliance test stand and accessories.
2. Brass or copper attenuation block.
3. Plastic cassette and direct-print paper or redipack film cassette.

B. Procedure

1. Position all movable grids and compression cones out of the path of the primary beam. If necessary, level the table and retract the spot-film carriage. If the system utilizes a television monitor, turn it on and allow time for warmup.
2. Place the test stand in the approximate center of the table.
3. Insert the slide assembly, grid side down, into slot 5 (see Fig. 2-2).
4. Place attenuator block on top of slide assembly.
5. Fully open the beam-limiting device.
6. Center the image receptor over the test stand by observing the image of the grid on the image receptor.
7. Bring the imaging assembly down into firm contact with the top of the stand.
8. If using a dual-field image intensifier, e.g., 6- and 9-inch capability, select the mode of largest image magnification, e.g., 6-inch mode in this case.
9. Adjust the controls to obtain the best quality image.
10. Insert a plastic cassette containing a sheet of direct-print paper or redipack film cassette into the slide assembly and make an exposure.
11. At the image output, count the units from the center of the grid to each edge of the image as shown by lines A, B, C, and D of Fig. 2-11.

Note that line A passes between grid numbers 1 and 4, B passes between numbers 1 and 2, etc. Record the measurements in order.

12. Develop the film and outline the perimeter of the image.
13. Count the units from the center of the grid to each edge as you did with A, B, C, and D, above. Record these as A′, B′, C′, and D′.

C. Verification of Compliance

For compliance of nonimage-intensified systems, A shall be less than or equal to A′, B shall be less than or equal to B′, C shall be less than or equal to C′, and D shall be less than or equal to D′.

For image-intensified systems, determine the source-to-slot-5 distance by adding 18.5 centimeters (7.3 in) to the minimum source-to-skin distance (SSD) determined by the SSD test procedure using the BRH/FDA test stand. Calculate and record 3 percent and 4 percent of this distance. Determine the difference, without regard to sign, of A and A′, B and B′, C and C′, and D and D′. Sum the differences. They must be less than or equal to 4 percent of the source-to-slot-5 distance. In addition, the sum of the A and A′ plus the C and C′ differences and the sum of the B and B′ plus D and D′differences must each be less than or equal to 3 percent of the source-to-slot-5 distance.

NEMA Standard 5-15-1979.

Copyright National Electrical Manufacturers Association
Provided by IHS under license with NEMA
No reproduction or networking permitted without license from IHS
Not for Resale

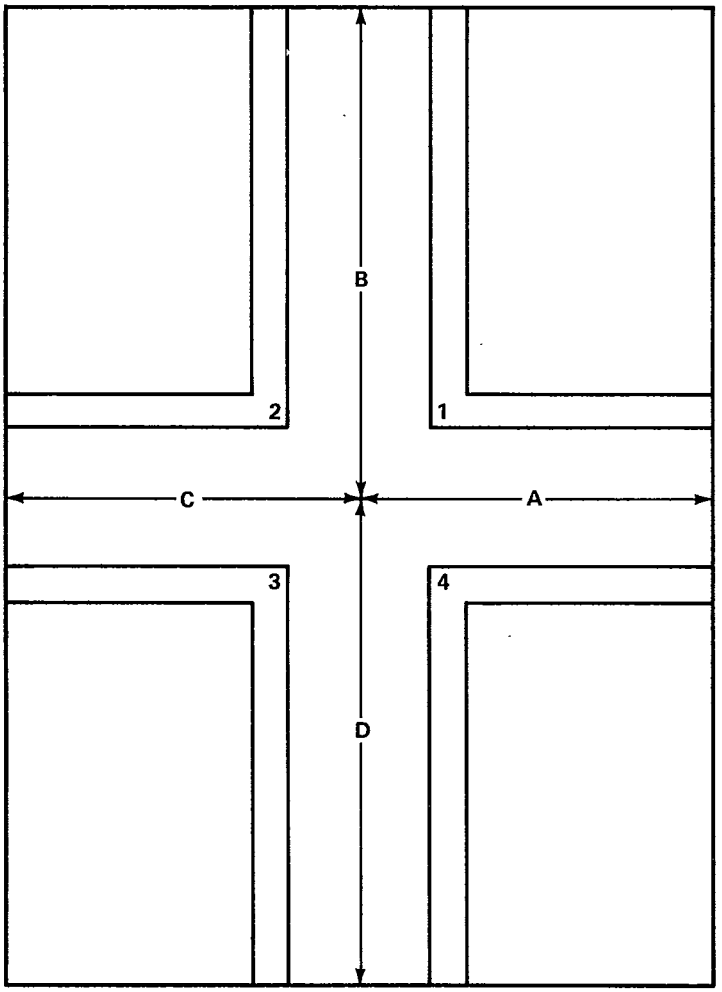

Fig. 2-11

Copyright National Electrical Manufacturers Association
Provided by IHS under license with NEMA
No reproduction or networking permitted without license from IHS
Not for Resale

.02 Method II—Direct Method

A. Equipment

1. Lead foil phantom or copper attenuator.
2. Direct-print paper.
3. One- by 1-inch steel marker.
4. Four additional metal markers (each marker is approximately 1/32-inch galvanized sheet metal having the dimensions of 1.5 by 0.5 inches).

B. Procedure—Nonimage-intensified Fluoroscope

1. Place the image receptor as close as possible to the tabletop.
2. Open the shutters to the maximum and activate the fluoroscopic tube.
3. Slowly increase the distance between the tabletop and the image receptor. The unit is in compliance if, at the greatest extension of the image receptor, there is an unilluminated border all around the visible area of the image receptor. No further tests need be made.
4. If the illuminated area expands to the edges of the visible area of the image receptor, lower the image receptor until there is a small unilluminated border.
5. Close the shutters to produce approximately a 2-inch wide unilluminated border. Resume increasing image-receptor-to-tabletop distance. The unit is not in compliance if the illuminated area continues to expand.
6. If the illuminated area does not expand, then at the maximum SID, slowly open the shutters to the maximum. The unit is in compliance if the illuminated area does not expand.

C. Procedure—Image-intensified Fluoroscope (Over-the-table Tube, Variable Collimator)

This procedure can be used only if the distance from the input phosphor to the tabletop does not change with SID and if the SID is variable.

1. Raise the tube housing to its greatest SID and, if the beam-limiting device is not automatic, close the shutters to their fullest extent.
2. Activate the tube and slowly increase the field size while observing the monitor. If at the maximum field size it is obvious that the image of the beam-limiting device is apparent at the edge of the image receptor, no further test need be made. (See Fig. 2-12.)
3. If there is no unilluminated area at any of the edges of the image receptor, lower the tube head until the bottom of the beam-limiting device is at its minimal distance from the tabletop (or 12 inches, whichever is greater). Record this distance.

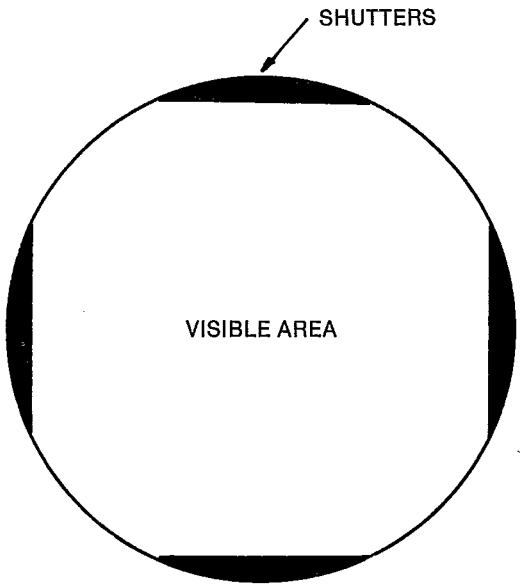

Fig. 2-12

4. Place a lead foil phantom or copper attenuator on the tabletop and center a loaded cassette in the light field (Fig. 2-13).
5. Adjust the light field to give a 5- by 7-inch field on the cassette and mark the edges with metal markers.
6. Attach a 1- by 1-inch steel marker to the center of the bottom of the beam-limiting device. (Exact centering is not necessary.)
7. Make an appropriate exposure.
8. Develop the direct-print paper or film and check light and X-ray beam alignment.
9. Measure length of marker image.
10. By similar triangles, determine the source-to-tabletop distance.
11. This procedure can continue only if the unit is aligned to radiographic requirements (plus or minus 2 percent SID). Raise the tube head to maximum SID.
12. Mark the edges of the visible area by placing two radiopaque markers within the light field and parallel to each other and to the edges of the light field.
13. While viewing the markers through the image intensifier, activate the tube on and off, adjusting the parallel markers between exposures until the outer edges of the markers are no longer visible (Fig. 2-14).
14. Again, turn on the light field and measure the distance from the edges of the light field to the parallel markers.
15. To determine the maximum source-to-tabletop distance, subtract the beam-limiting-

Copyright National Electrical Manufacturers Association
Provided by IHS under license with NEMA
No reproduction or networking permitted without license from IHS
Not for Resale
PROBLEM HARD COPY

OVER THE TABLE TUBE

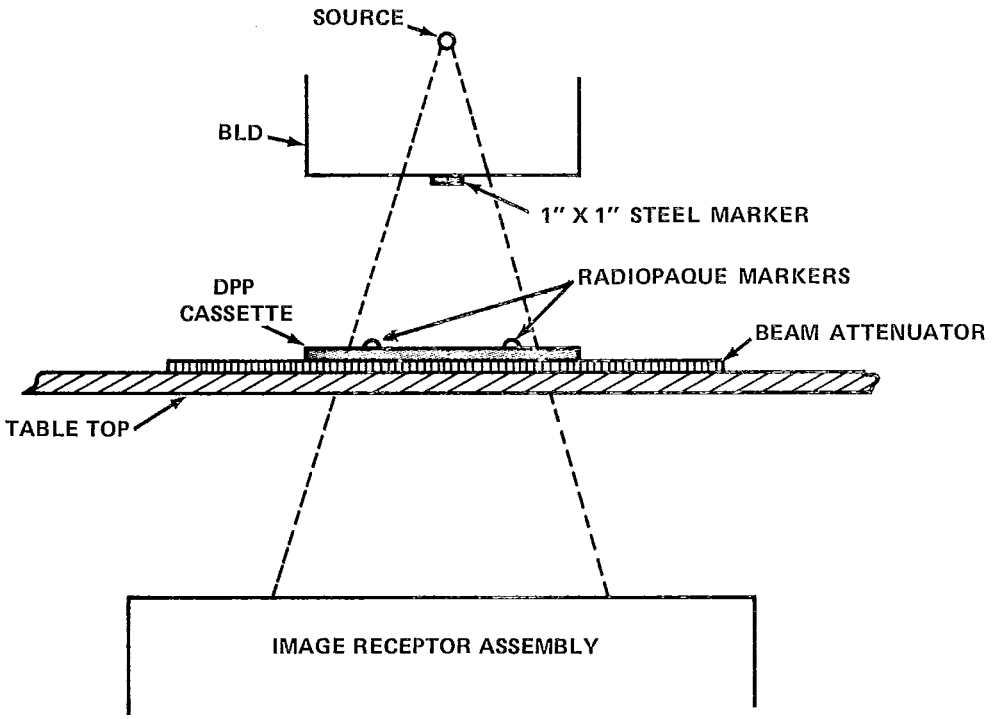

Fig. 2-13

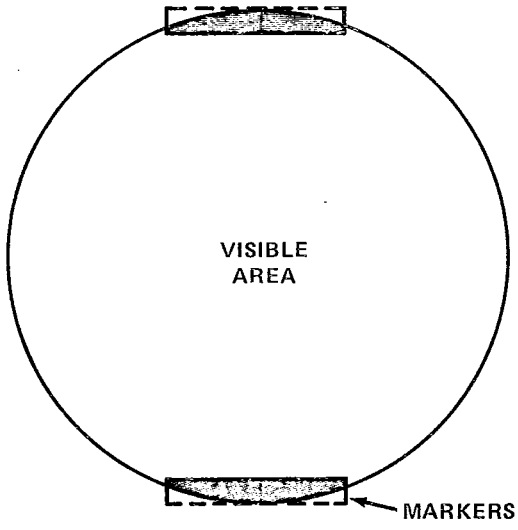

Fig. 2-14

Copyright National Electrical Manufacturers Association
Provided by IHS under license with NEMA
No reproduction or networking permitted without license from IHS
Not for Resale
PROBLEM HARD COPY

device-to-tabletop distance previously determined from the source-to-tabletop distance as previously calculated and add this result to the measured distance from the bottom of the beam-limiting device to the tabletop. Calculate the percent of the SID of the X-ray field that is in excess of the visible area.

16. Place the markers at right angles to the original position and repeat the last three steps.

NEMA Standard 5-15-1979.

D. Procedure—Image-intensified Fluoroscope (Under-the-table Tube, Variable Collimator)

1. Attach a beam attenuator to the bottom of the image receptor housing. Raise the image receptor housing to its greatest SID and close the shutters to the fullest extent. Activate the tube and slowly increase the field size while observing the monitor. If at the maximum field size it is obvious that the image of the beam-limiting device is apparent at the edge of the image receptor, no further test need be made. (See Fig. 2-12.)
2. Place markers on tabletop, continue to activate the tube intermittently, and between exposures move the markers to the edges of the visible area of the image receptor (Fig. 2-15).
3. Place a 1- by 1-inch steel marker on the tabletop approximately centered between the markers.
4. Center a cassette loaded with direct-print paper or a redipack over the markers. Attach a second cassette to the bottom of the beam attenuator, adjust the image receptor to 30 centimeters (12 in) above the tabletop or the minimum beam attenuator-to-tabletop distance, whichever is greater, and center it over the bottom cassette (Fig. 2-16). Measure the distance.
5. Activate the tube for an appropriate exposure of direct-print paper or the redipack film.
6. Develop the direct-print papers or the films. Measure the length of the marker image on the upper sheet. Calculate the distance from the tabletop to the source by the similar triangle method. Use this distance as the SID in the next step (7).
7. On the lower sheet measure the distance from the edges of the exposed area to the outer edge of the marker. Calculate the percent of the SID of the X-ray field in excess of the visible area.
8. Place the radiopaque markers at right angles to the original position and repeat the procedure.

E. Verification of Compliance

For nonimage-intensified fluoroscopy, verify that the X-ray field does not extend beyond the visible area of the image receptor.

For image-intensified fluoroscopy, verify that neither the length or width misalignment exceeds the visible area of the image receptor by more than 3 percent of the SID. The sum of the excess length and the excess width shall be no greater than 4 percent of the SID.

NEMA Standard 5-15-1979.

XR 8-2.25 FLUOROSCOPIC SOURCE-TO-SKIN DISTANCE (SSD)

REQUIREMENT—The source-to-skin distance (SSD) shall be not less than 38 centimeters (15 in) on stationary fluoroscopes. [See 21 CFR 1020.32(f).]

A. General

If the SSD can be measured directly, no further testing is necessary.

B. Equipment

1. BRH/FDA compliance test stand with accessories (Fig. 2-1).
2. Plastic cassette and direct-print paper or redipack film cassette.
3. Brass or copper attenuation block.

C. Procedure

1. Position all movable grids and compression cones out of the primary beam. If necessary, return the table to the horizontal position and raise the spot-film carriage. If the system utilizes a television monitor, turn it on and allow time for warmup.
2. Place the test stand in the approximate center of the table.
3. Insert the slide assembly, grid side down, at slot 3 (see Fig. 2-2).
4. Place attenuation block on the top of slide assembly.

Copyright National Electrical Manufacturers Association
Provided by IHS under license with NEMA
No reproduction or networking permitted without license from IHS
Not for Resale

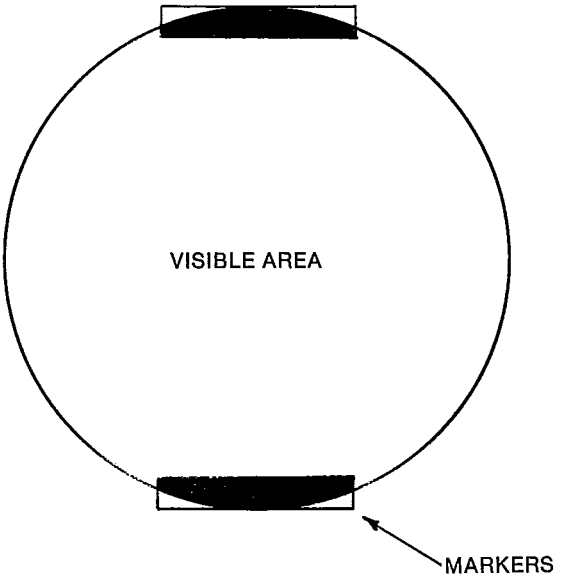

Fig. 2-15

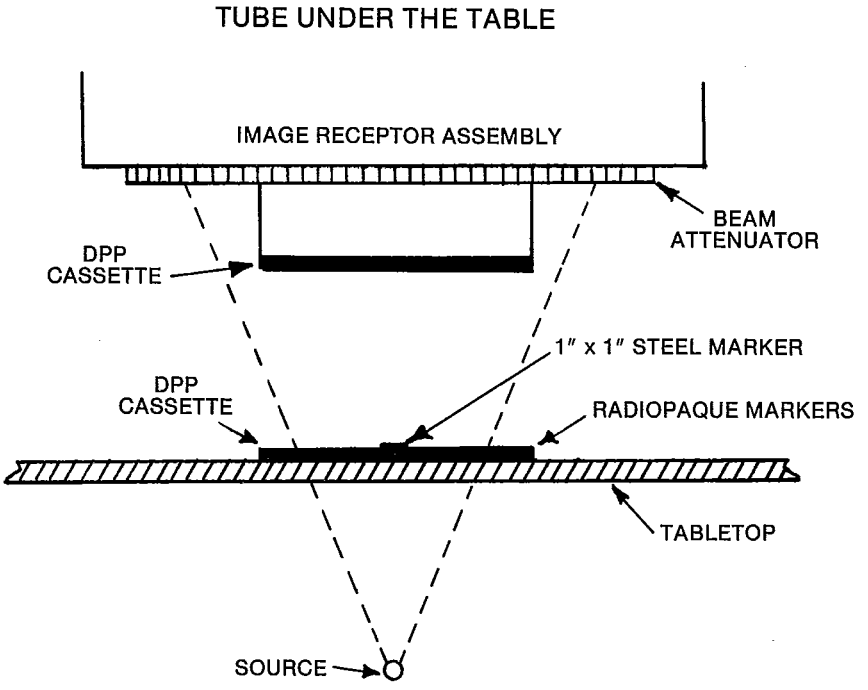

Fig. 2-16

Copyright National Electrical Manufacturers Association
Provided by IHS under license with NEMA
No reproduction or networking permitted without license from IHS
Not for Resale

UNDER TABLE TUBES

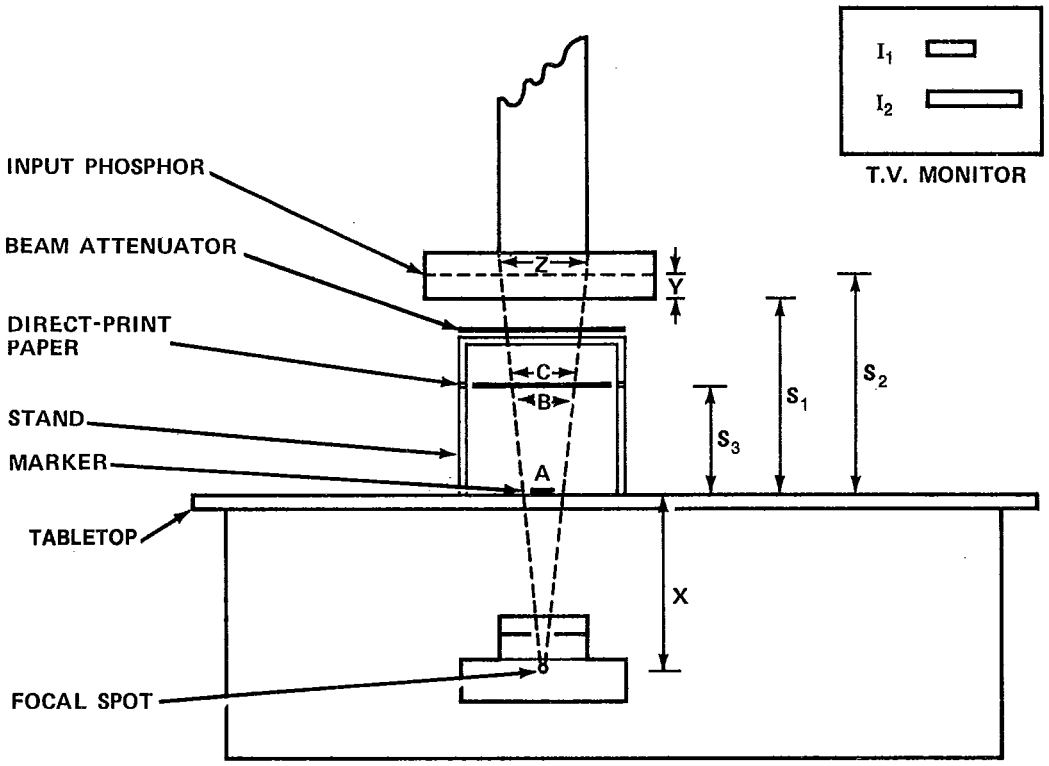

A = MARKER SIZE (PLACED ON THE TABLETOP)
B = MARKER IMAGE SIZE ON DIRECT-PRINT PAPER
C = BEAM SIZE ON DIRECT-PRINT PAPER

Fig. 2-17

Copyright National Electrical Manufacturers Association
Provided by IHS under license with NEMA
No reproduction or networking permitted without license from IHS
Not for Resale

5. Fully open the beam-limiting device.
6. Center the image receptor over the test stand by observing the image of the grid on the image receptor.
7. Bring the image assembly down into firm contact with the spacer bar on the top of the stand.
8. Slide the focal spot assembly, brass side up, into slot 7.
9. Insert the plastic cassette or the redipack film cassette into the slide assembly.
10. Make an exposure assuring proper density on the film or paper.
11. Remove the cassette and develop the direct-print paper or film.
12. Measure the minimum separation of the outside edges of the focal spot strips (see Fig. 2-18).

D. Calculations

Calculate the minimum SSD.

$$\text{Minimum SSD (in inches)} = \frac{28.25\ \text{in}^2}{(\text{image size in inches} - 2.5)} - 0.4\ \text{in}$$

$$\text{Minimum SSD (in centimeters)} = \frac{182.3\ \text{cm}^2}{(\text{image size in cm} - 6.4)} - 1.0\ \text{cm}$$

E. Verification of Compliance

Verify that the SSD is not less than 38 centimeters (15 in). NEMA Standard 5-15-1979.

XR 8-2.26 ENTRANCE EXPOSURE RATE

REQUIREMENT

A. The exposure measured at the point where the center of the useful beam enters the patient shall not exceed 10 roentgens per minute, except during recording of fluoroscopic images or when provided with optional high-level control.

B. When provided with optional high-level control, the equipment shall not be operable at any combination of tube potential and current which will result in an exposure rate in excess of 5 roentgens per minute at the point where the center of the useful beam enters the patient unless the high-level control is activated.

1. Special means of activation of high-level controls, such as additional pressure applied continuously by the operator, shall be required to avoid accidental use.
2. A continuous signal audible to the fluoroscopist shall indicate that the high-level control is being employed.

C. In addition to the other requirements, certified equipment which does not incorporate an automatic exposure control (e.g. automatic brightness control, etc.) shall not be operable at any combination of tube potential and current which will result in an exposure rate in excess of 5 roentgens per minute at the point where the center of the beam enters the patient, except during recording of fluoroscopic images or when provided with an optional high-level control. [See 21 CFR 1020.32(d).]

.01 Method I—BRH/FDA Test Stand Method

A. General

The manufacturer's recommended test stand is permitted to be used to perform this test as long as the geometric relations are the same as those specified for the BRH/FDA test stand.

B. Equipment

1. BRH/FDA compliance test stand with accessories (see Fig. 2-1).
2. Survey meter adapted for use with the stand (with an ion chamber).
3. 1/8-inch thick lead sheet.
4. Brass or copper attenuation block.

C. Procedure (Fluoroscopic) Under-the-table Tube

The position of measurement of fluoroscopic entrance exposure rate is specified as 1 centimeter (0.4 in) above the tabletop for fluoroscopic systems with under-table sources. The test procedure is intended to be used in the following manner:

1. Position all movable grids and compression cones out of the path of the primary beam. If necessary, return the table to the horizontal position and raise the spot-film carriage. If the system utilizes a television monitor, turn it on and allow time for warmup.
2. Place the test stand in the approximate center of the table.
3. Insert the slide assembly, grid side down, into slot 5 (see Fig. 2-2).
4. Place the attenuation block on top of the slide assembly.
5. Partially open the beam-limiting device.
6. Center the image receptor over the test stand by observing the image of the grid on the image receptor.
7. Bring the imaging assembly down into firm contact with the top of the stand.

Copyright National Electrical Manufacturers Association
Provided by IHS under license with NEMA
No reproduction or networking permitted without license from IHS
Not for Resale
PROBLEM HARD COPY

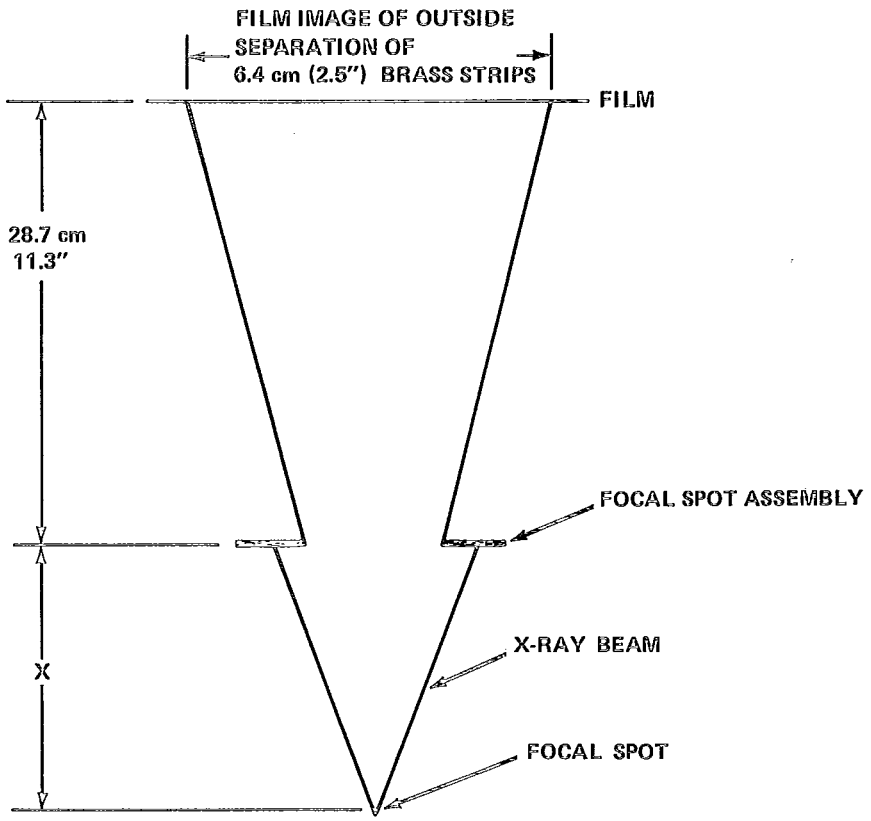

EQUATION: $X = \frac{182.3\ cm^2}{(\text{IMAGE SIZE IN CENTIMETERS} - 6.4\ cm)}$

EQUATION: $X = \frac{28.25}{(\text{IMAGE SIZE IN INCHES} - 2.5)}$

MINIMUM SSD (IN CENTIMETERS) = X - 1.0 cm

MINIMUM SSD (IN INCHES) = X – 0.4"

Fig. 2-18
FOCAL SPOT GEOMETRY

Copyright National Electrical Manufacturers Association
Provided by IHS under license with NEMA
No reproduction or networking permitted without license from IHS
Not for Resale

8. Slide the 2-inch beam-defining assembly, leaded side down, into slot 7.
9. Attach the ion chamber assembly, facing downward, at position B.
10. Connect the ion chamber to the meter.
11. Center the 1/8-inch lead sheet on top of the attenuation block and fully open the beam-limiting device.
12. If testing in the manual mode, set the tube potential and current to the maximum settings. If testing in the automatic brightness control (ABC) mode, set the control to the maximum setting.
13. Make an exposure and determine the maximum entrance exposure rate.

D. Procedure (Fluoroscopic) Over-the-table Tube

1. Position all movable grids and compression cones out of the path of the primary beam.
2. If the SID is variable, set the end of the beam-limiting device or spacer as close to the tabletop as it can be placed provided it shall not be closer than 30 centimeters.
3. Position the ion chamber, facing upward, 30 centimeters above the tabletop.
4. Center the 1/8-inch lead sheet on the tabletop.
5. If testing in the manual mode, set the tube potential and current to the maximum settings. If testing in the automatic brightness control (ABC) mode, set the control to the maximum setting.
6. Make an exposure and determine the maximum entrance exposure rate.

E. Verification of Compliance

1. *Equipment With Automatic Brightness Control*
   a. *High-level control not provided*—verify that the maximum entrance exposure rate does not exceed 10 roentgens per minute.
   b. *High-level control provided, not activated*—verify that the maximum entrance exposure rate does not exceed 5 roentgens per minute.
   c. *High-level control provided, activated*—verify that a special means of activating the high-level control, such as additional pressure applied continuously by the operator, is provided and that a continuous signal audible to the fluoroscopist is present indicating that the high-level control is being employed.
2. *Equipment Without Automatic Brightness Control*
   a. *High-level control not provided*—verify that the maximum entrance exposure rate does not exceed 5 roentgens per minute.
   b. *High-level control provided, not activated*—verify that the maximum entrance exposure rate does not exceed 5 roentgens per minute.
   c. *High-level control provided, activated*—verify that a special means of activating the high-level control, such as additional pressure applied continuously by the operator, is provided and that a continuous signal audible to the fluoroscopist is present indicating that the high-level control is being employed.

.02 Method II—Alternate Direct Method

A. Equipment

1. Radiation meter.
2. Four-legged aluminum attenuator block.
3. 1/8-inch lead sheet.

B. Procedure (Fluoroscopic) Under-the-table Tube

The position of measurement of fluoroscopic entrance exposure rate is specified as 1 centimeter (0.4 in) above the tabletop for fluoroscopic systems with under-table sources. The test procedure is intended to be used in the following manner:

1. Position all movable grids and compression cones out of the path of the primary beam. If necessary, return the table to the horizonal position and raise the spot-film carriage. If the system utilizes a television monitor, turn it on and allow time for warmup.
2. Place the attenuation block in the approximate center of the table.
3. Partially open the beam-limiting device.
4. Center the image receptor over the attenuation block by observing the image.
5. Bring the imaging assembly down to 12 inches above the tabletop.
6. Center the probe on the tabletop.
7. Center the 1/8-inch lead sheet on top of the attenuation block and fully open the beam-limiting device.
8. If testing in the manual mode, set the tube potential and current to the maximum settings. If testing in the automatic brightness control (ABC) mode, set the control to the maximum setting.
9. Make an exposure and determine the maximum entrance exposure rate.

Copyright National Electrical Manufacturers Association
Provided by IHS under license with NEMA
No reproduction or networking permitted without license from IHS
Not for Resale

C. Procedure (Fluoroscopic) Over-the-table Tube

1. Position all movable grids and compression cones out of the path of the primary beam.
2. If the source-to-image distance (SID) is variable, set the end of the beam-limiting device or spacer as close to the tabletop as it can be placed provided it shall not be closer than 30 centimeters.
3. Place the attenuation block at the approximate center and 20 centimeters above the tabletop.
4. Position the radiation meter probe, facing upward, 30 centimeters above the tabletop.
5. Center the 1/8-inch lead sheet on the tabletop.
6. If testing in the manual mode, set the tube potential and current to the maximum settings. If testing in the automatic brightness control (ABC) mode, set the control to the maximum setting.
7. Make an exposure and determine the maximum entrance exposure rate.

D. Verification of Compliance

1. *Equipment With Automatic Brightness Control*
   a. *High-level control not provided*—verify that the maximum entrance exposure rate does not exceed 10 roentgens per minute.
   b. *High-level control provided, not activated*—verify that the maximum entrance exposure rate does not exceed 5 roentgens per minute.
   c. *High-level control provided, activated*—verify that a special means of activating the high-level control, such as additional pressure applied continuously by the operator, is provided and that a continuous signal audible to the fluoroscopist is present indicating that the high-level control is being employed.

2. *Equipment Without Automatic Brightness Control*
   a. *High-level control not provided*—verify that the maximum entrance exposure rate does not exceed 5 roentgens per minute.
   b. *High-level control provided, not activated*—verify that the maximum entrance exposure rate does not exceed 5 roentgens per minute.
   c. *High-level control provided, activated*—verify that a special means of activating the high-level control, such as additional pressure applied continuously by the operator, is provided and that a continuous signal audible to the fluoroscopist is present indicating that the high-level control is being employed.

NEMA Standard 5-15-1979.

XR 8-2.27 PRIMARY BARRIER—X-RAY LOCKOUT

REQUIREMENT—For equipment manufactured after February 25, 1978, when the angle between the image receptor and the beam axis is variable, means shall be provided to indicate when the axis of the X-ray beam is perpendicular to the plane of the image receptor.

The fluoroscopic tube shall not produce X-rays unless the barrier is in position to intercept the entire useful beam. [See 21 CFR 1020.32(a) and 1020.32(b)(2)(iii).]

A. Verification of Compliance

Move the primary barrier off the detents position and verify that X-rays cannot be produced by the fluoroscopic X-ray tube. Verify that, if the beam angulation is variable, a means is provided to indicate that the beam axis is perpendicular to the plane of the image receptor.

NEMA Standard 5-15-1979.

XR 8-2.28 FLUOROSCOPIC PRIMARY BARRIER LEAKAGE

REQUIREMENT—The exposure rate due to transmission through the primary protective barrier with the attenuation block in the useful beam, combined with radiation from the image intensifier, if provided, shall not exceed 2 milliroentgens per hour at 10 centimeters (3.9 in) from any accessible surface of the fluoroscopic imaging assembly beyond the plane of the image receptor for each roentgen per minute of entrance exposure rate. [See 21 CFR 1020.32(a).]

.01 Method I—Test Stand Method

A. General

1. The fluoroscopic entrance exposure rate (automatic or manual) test must be completed prior to the performance of this test.
2. A manufacturer's recommended test stand is permitted to be used to perform this test provided that the geometric relations are the same as those specified in the BRH/FDA regulations.
3. This requirement must be met at all angles for which the system is designed to operate.

Copyright National Electrical Manufacturers Association
Provided by IHS under license with NEMA
No reproduction or networking permitted without license from IHS
Not for Resale

B. Equipment

BRH/FDA test stand and accessories or equivalent.

C. Procedure (Manual Mode—Under-table Tubes)

1. Position all movable grids and compression cones out of the path of the primary beam.
2. Position the test stand in the approximate center of the table.
3. Insert the slide assembly, grid side down, into slot 5 (see Fig. 2-2).
4. Place the attenuation block on the top of the slide assembly.
5. Bring the imaging assembly down into firm contact with the top of the stand.
6. Connect the survey meter to the 100-centimeter^2 ion chamber and set the ion chamber at some position on the primary barrier.
7. Using the same tube potential and current as for the entrance exposure rate test (maximum settings), activate the system and measure the transmission rate at 10 centimeters from any accessible surface of the fluoroscopic imaging assembly.
8. Repeat this procedure while moving the ion chamber until the maximum rate has been determined.
9. Check especially seams, joints, and other such areas for possible leakage.
10. Divide the maximum transmission rate by the entrance exposure rate to determine the maximum primary barrier transmission per the entrance exposure rate.

D. Procedure (Automatic Mode—Under-table Tubes)

1. Position all movable grids and compression cones out of the path of the primary beam.
2. Position the test stand in the approximate center of the tabletop.
3. Insert the slide assembly, grid side down, into slot 5 (see Fig. 2-2).
4. Place the attenuation block on the top of the slide assembly.
5. Bring the imaging assembly down into firm contact with the top of the stand.
6. Connect the survey meter to the 100-centimeter^2 ion chamber and set the ion chamber at some position on the primary barrier.
7. Set the automatic brightness controls to maximum.
8. Activate the system and measure the transmission rate at 10 centimeters from any accessible surface of the fluoroscopic imaging assembly.
9. Repeat this procedure while moving the ion chamber until the maximum rate has been determined.
10. Check especially seams, joints, and other such areas for possible leakage.
11. Divide the maximum transmission rate by the entrance exposure rate to determine the maximum primary barrier transmission per the entrance exposure rate.

E. Procedure—Over-table Tube

1. Position all movable grids and compression cones out of the path of the primary beam.
2. If the source-to-image distance (SID) is variable, set the end of the beam-limiting device or spacer as close to the tabletop as it can be placed provided it shall not be closer than 30 centimeters.
3. Position the attenuation block 20 centimeters above the tabletop.
4. Connect the survey meter to the 100-centimeter^2 ion chamber and set the ion chamber at some position on the primary barrier.
5. Using the same tube potential and current as for the entrance exposure rate test (maximum settings), or with the automatic brightness controls set to maximum, activate the system and measure the transmission rate at 10 centimeters from any accessible surface of the fluoroscopic imaging assembly.
6. Repeat this procedure while moving the ion chamber until the maximum rate has been determined.
7. Check especially seams, joints, and other such areas for possible leakage.
8. Divide the maximum transmission rate by the entrance exposure rate to determine the maximum primary barrier transmission per the entrance exposure rate.

F. Verification of Compliance

Verify that the primary protective barrier exposure rate does not exceed 2 milliroentgens per hour for each roentgen per minute of entrance exposure rate.

NEMA Standard 5-15-1979.

.02 Method II—Alternate Direct Method

A. General

This requirement must be met at all angles for which the system is designed to operate.

B. Equipment

1. Radiation meter.
2. Four-legged aluminum block.
3. Lead scatter shield.

Copyright National Electrical Manufacturers Association
Provided by IHS under license with NEMA
No reproduction or networking permitted without license from IHS
Not for Resale
PROBLEM HARD COPY

C. Procedure (Manual Mode—Under-table Tubes)

1. Position all movable grids and compression cones out of the path of the primary beam.
2. Position the attenuation block in the approximate center of the table.
3. Open collimator.
4. Bring the imaging assembly down to 12 inches above the tabletop.
5. Connect the survey meter to the 100-centimeter2 ion chamber and set the ion chamber at some position on the primary barrier.
6. Using the same tube potential and current as for the entrance exposure rate test (maximum settings), activate the system and measure the transmission rate at 10 centimeters from any accessible surface of the fluoroscopic imaging assembly. Use the lead scatter shield to prevent air scatter error.
7. Repeat this procedure while moving the ion chamber until the maximum rate has been determined.
8. Check especially seams, joints, and other such areas for possible leakage.
9. Divide the maximum transmission rate by the entrance exposure rate to determine the maximum primary barrier transmission per the entrance exposure rate.

D. Procedure (Automatic Mode—Under-table Tubes)

1. Position all movable grids and compression cones out of the path of the primary beam.
2. Position the attenuation block in the approximate center of the tabletop.
3. Open collimator.
4. Bring the imaging assembly down to 12 inches above tabletop.
5. Connect the survey meter to the 100-centimeter2 ion chamber and set the ion chamber at some position on the primary barrier.
6. Set the automatic brightness controls to maximum.
7. Activate the system and measure the transmission rate at 10 centimeters from any accessible surface of the fluoroscopic imaging assembly. Use lead shield to prevent air scatter error.
8. Repeat this procedure while moving the ion chamber until the maximum rate has been determined.
9. Check especially seams, joints, and other such areas for possible leakage.
10. Divide the maximum transmission rate by the entrance exposure rate to determine the maximum primary barrier transmission per the entrance exposure rate.

E. Procedure—Over-table Tubes

1. Position all movable grids and compression cones out of the path of the primary beam.
2. If the source-to-image distance (SID) is variable, set the end of the beam-limiting device or spacer as close to the tabletop as it can be placed provided it shall not be closer than 30 centimeters.
3. Position the attenuation block 20 centimeters above the tabletop.
4. Connect the survey meter to the 100-centimeter2 ion chamber and set the ion chamber at some position on the primary barrier.
5. Using the same tube potential and current as for the entrance exposure rate test (maximum settings), or with the automatic brightness controls set to maximum, open collimator, activate the system, and measure the transmission rate at 10 centimeters from any accessible surface of the fluoroscopic imaging assembly. Use lead shield to prevent air scatter error.
6. Repeat this procedure while moving the ion chamber until the maximum rate has been determined.
7. Check especially seams, joints, and other such areas for possible leakage.
8. Divide the maximum transmission rate by the entrance exposure rate to determine the maximum primary barrier transmission per the entrance exposure rate.

D. Verification of Compliance

Verify that the primary protective barrier exposure rate does not exceed 2 milliroentgens per hour for each roentgen per minute of entrance exposure rate.

NEMA Standard 5-15-1979.

SPOT-FILM RADIOGRAPHIC TESTS

XR 8-2.29 ALIGNMENT OF X-RAY FIELD EDGES TO SELECTED PORTIONS OF THE IMAGE RECEPTOR

REQUIREMENT—The misalignment of the X-ray field with that portion of the image receptor selected on the spot-film device, along either the length or the width dimension, shall not exceed 3 percent of the source-to-image-receptor distance (SID), and the total misalignment without regard to sign along both dimensions shall not exceed 4 percent of the SID. [See 21 CFR 1020.31(g).]

Copyright National Electrical Manufacturers Association
Provided by IHS under license with NEMA
No reproduction or networking permitted without license from IHS
Not for Resale

A. General

Technique factors must be selected for a film density of approximately 1.0.

B. Equipment

1. Manufacturer's recommended test stand.
2. Graduated template.
3. Two cassettes.
4. Film.

C. Procedure

1. Verify by the means provided that the axis of the X-ray beam is perpendicular to the plane of the image receptor (applicable only where variable beam angulation is provided).
2. Load the cassette with film and place in the spot-film device.
3. Position test stand in accordance with manufacturer's instructions.
4. Load a second cassette with film and place in the designated position on the test stand. *This film must be large enough to accept a one-on-one format.*
5. Place graduated template in a position between the X-ray source and the two cassettes.
6. Select proper technique factors and a one-on-one spot-film format.
7. Make an exposure and develop films.
8. Repeat steps 1 through 7 for each available spot-film format.

D. Calculations

1. Calculate the magnification factor by measuring the distance between the same two points on the graduated template image on each of the two films. The two points chosen must be as far apart as possible. Divide the smaller measurement into the larger measurement to determine the magnification factor.
2. If the source-to-test stand film distance is known, calculate the actual SID by multiplying the magnification factor by the known source-to-test stand film distance.
3. If the source-to-test stand film distance is not known, measure the actual distance from the graduated template position to the test stand film plane (distance Z, see Fig. 2-7).
4. Calculate the source-to-template distance (distance X) using the following formula:

$$\frac{A}{B} = \frac{X}{X + Z} \text{ or } X = \frac{A\,Z}{B - A}$$

where:

A = two points on a graduated template.

B = magnification of the same two points on the graduated template as used in A.

5. Calculate the source-to-test stand film distance by adding distance X and distance Z. Multiply the source-to-test stand film distance by the magnification factor determined in step 1 to determine the actual SID.
6. On the test stand film measure and record distances a, b, c, and d from the center of the graduated template to each respective edge of the radiographic image (see Fig. 2-19).
7. Multiply each distance a through d by the magnification factor and record the products as a′, b′, c′, and d′. Note that a′, b′, c′, and d′ are the respective distances they would have been if they had been recorded at the spot-film plane.
8. On the spot-film image measure distances A, B, C, and D from the center of the graduated template image to each respective edge of the selected portion of the spot-film (see Fig. 2-20). Record distances A, B, C, and D as measured.
9. Calculate the length differences and width differences without regard to sign as follows:

$$\text{Length difference} = |B - b'| + |D - d'|$$
$$\text{Width difference} = |A - a'| + |C - c'|$$

Record the sum of the length and width differences.

E. Verification of Compliance

1. Calculate 3 and 4 percent of the actual SID and record.

The individual length and width misalignment, regardless of sign, must be less than or equal to 3 percent of the SID as calculated in step 1. The summation of the length and width misalignments, regardless of sign, must be less than or equal to 4 percent of the SID as calculated in step1.

NEMA Standard 5-15-1979.

XR 8-2.30 ALIGNMENT OF CENTER OF X-RAY FIELD TO CENTER OF SELECTED PORTION OF IMAGE RECEPTOR

REQUIREMENT—The center of the X-ray field in the plane of the film shall be aligned with the center of the selected portion of the film to within 2 percent of the source-to-image distance (SID). [See 21 CFR 1020.31(g)(4).]

A. General

1. All exposures taken during this test should have a uniform film density of approximately 1.0.
2. The actual SID must be determined prior to performing this test.

B. Equipment

Radiographic cassette and film.

Copyright National Electrical Manufacturers Association
Provided by IHS under license with NEMA
No reproduction or networking permitted without license from IHS
Not for Resale

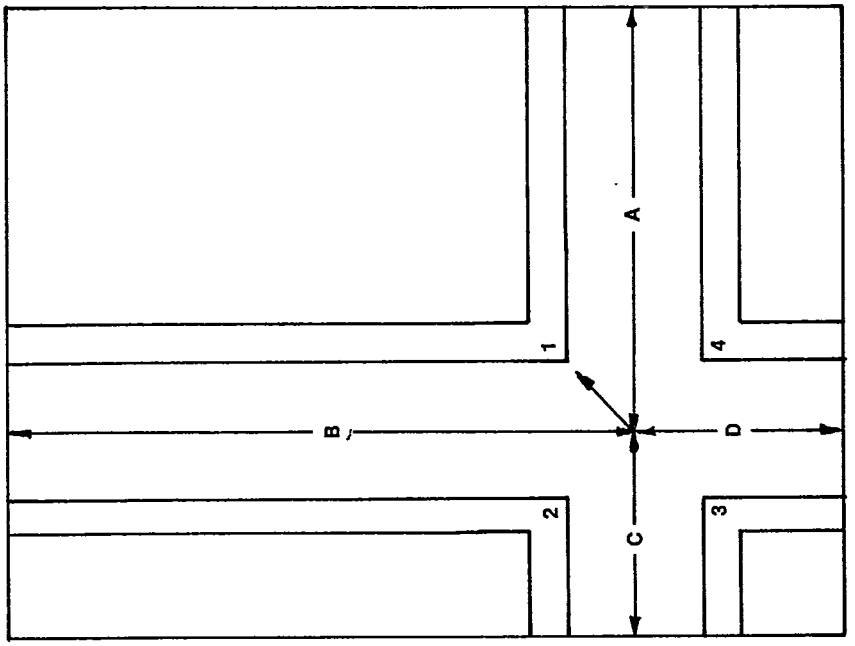

Fig. 2-20

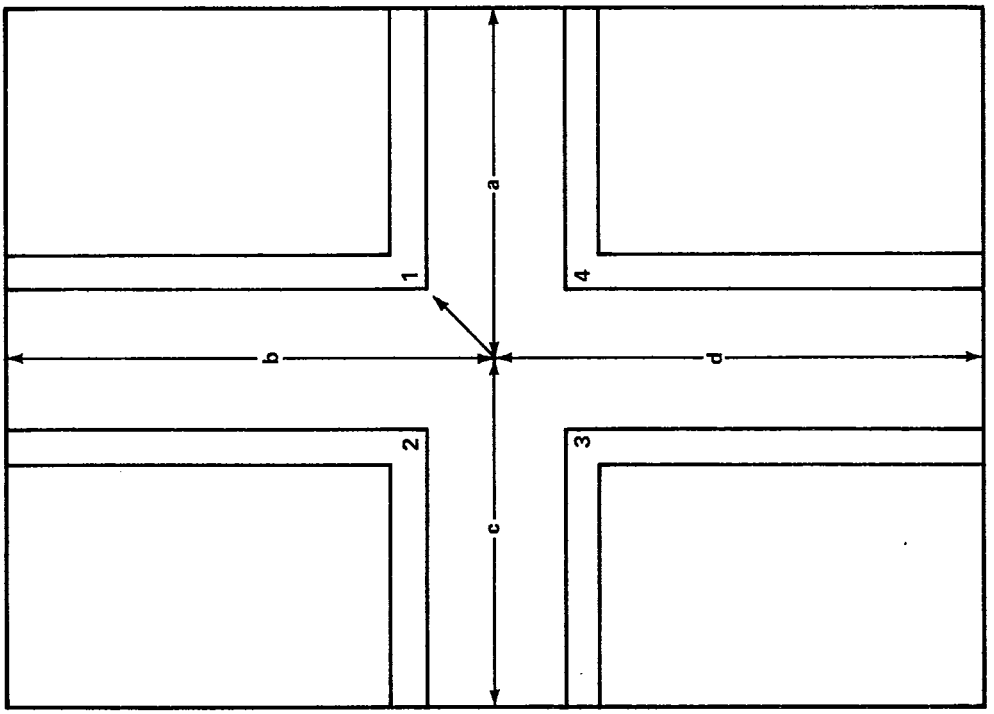

Fig. 2-19

Copyright National Electrical Manufacturers Association
Provided by IHS under license with NEMA
No reproduction or networking permitted without license from IHS
Not for Resale

C. Procedure

1. Load cassette with film and place in the spot-film device.
2. Select a one-on-one spot-film format.
3. Assure that the SID is set to the value previously determined in the actual SID determination test.
4. Reduce the X-ray field size to a size slightly smaller than the size of the film area to be exposed.
5. Make an exposure and develop film.
6. Repeat steps 1 through 5 for each available spot-film format.
7. To determine the centers of the X-ray films draw diagonals across the film (the point where these two lines cross is the center of the film).
8. To determine the corners of the image recorded on the film, locate two points on each side of the four sides of the image. Through the two points on each side draw a straight line. These four lines when extended intersect making a rectangle which is a close approximation of the actual X-ray field. Draw diagonals across the rectangular figure determined. The point at which the two diagonals cross is assumed to be the center of the X-ray field.
9. The distance from the film center mark is measured and recorded as the linear displacement or misalignment of the centers of the image receptor and the X-ray field.

D. Verification of Compliance

Verify that this distance is less than or equal to 2 percent of the SID.

NEMA Standard 5-15-1979.

XR 8-2.31 STANDBY RADIATION FROM CAPACITOR DISCHARGE (CD) EQUIPMENT

REQUIREMENT—Radiation emitted from the X-ray tube when the exposure switch or timer is not activated shall not exceed a rate of 2 milliroentgens per hour at 5 centimeters from any accessible surface of the diagnostic source assembly, with the beam-limiting device fully open. Compliance shall be determined by measurements averaged over an area of 100 square centimeters with no linear dimension greater than 20 centimeters. The response time of the radiation measuring instruments system shall be no less than 3 and no greater than 20 seconds. [See 21 CFR 1020.31(k).]

A. Equipment

1. One hundred-square-centimeter ionization chamber.
2. Electrometer having a response time of no less than 3 or greater than 20 seconds.

B. Procedure

1. Connect the instrumentation in accordance with the manufacturer's instructions.
2. Apply power to the equipment and allow sufficient time for stabilization.
3. Open the beam-limiting device fully.
4. Position the window of the ionization chamber on the X-ray beam axis as close as possible to and parallel with the face of the beam-limiting device. If necessary, rotate the beam-limiting device so that it faces upward and place the ion chamber on the beam-limiting device face.
5. Adjust the kVp setting to its maximum value.
6. Charge the capacitors fully.
7. Reset the electrometer to zero. Set the electrometer function switch to the integrate mode and the range switch to the most sensitive scale.
8. Without engaging the exposure switch, measure the standby radiation emission for 2 minutes or a half-scale exposure indication, whichever comes first. Due to the long time period that may be required for this measurement, it is periodically necessary to recharge the capacitors to full charge by manually activating the charge switch when the tube potential drops by more than 5 kV.
9. From the exposure and time measurements, calculate the exposure rate in units of milliroentgens per hour.

C. Verification of Compliance

Verify that the radiation emitted from the X-ray tube does not exceed 2 milliroentgens per hour.

NEMA Standard 5-15-1979.

XR 8-2.32 X-RAY FIELD SIZE FOR MAMMOGRAPHY UNITS

REQUIREMENT—Means shall be provided to limit the useful beam such that the X-ray field at the plane of the image receptor does not extend beyond the edge of the image receptor at any designated source-to-image distance (SID) except the edge of the image receptor designed to be adjacent to the chest wall where the X-ray field may not extend beyond this edge by more than 2 percent of the SID.

Beam-limiting devices that have fixed apertures or multiple fixed apertures shall be clearly and permanently marked with each image receptor size and SID combination for which they are designed. For multiple fixed aperture

Copyright National Electrical Manufacturers Association
Provided by IHS under license with NEMA
No reproduction or networking permitted without license from IHS
Not for Resale

beam-limiting devices, an indication must be present to indicate which aperture is in position for use.

Each image-receptor support intended for installation on a system designed only for mammography shall have clear and permanent markings indicating the maximum image-receptor size for which it is designed. [See 21 CFR 1020.31(f)(3).]

.01 Method I—Field Size Limited to Film Size

A. Equipment

Film.

B. Procedure

1. Select or adjust the beam-limiting device to obtain the maximum X-ray field size.
2. If variable, adjust to the maximum SID for which the beam-limiting device or aperture is designed.
3. Select the appropriate technique factors, insert film, and make an exposure.
4. Develop film.

C. Verification of Compliance

1. Verify that the beam-limiting devices that have fixed apertures or multiple fixed apertures are clearly and permanently marked with each image receptor size and SID combination for which they are designed. For multiple fixed-aperture beam-limiting devices, an indication must be present to indicate which aperture is in position for use.
2. For each image-receptor support intended for installation on a system designed only for mammography, verify that it has clear and permanent markings indicating the maximum image receptor size for which it is designed.
3. If the edges of the X-ray field are contained within all four edges of the film, no further testing is necessary.
4. If it is not apparent that the X-ray field is contained within all four edges of the film, proceed with Method II.

NEMA Standard 5-15-1979.

.02 Method II—Metal Marker Method

A. Equipment

1. Film and appropriate cassettes (redipack film or direct-print paper).
2. Four metal markers.

B. Procedure

1. Select or adjust the beam-limiting device to obtain the maximum field size.
2. If variable, adjust to the maximum SID for which the beam-limiting device or aperture is designed.
3. Select appropriate technique factors and insert film into the image-receptor support assembly. Place a second film on the image-receptor support assembly, letting the film overlap the support by approximately 1 inch on the side nearest the patient.
4. Place the outside edges of two metal markers on the second film so that they are aligned with the edge of the image-receptor support assembly closest to the patient.
5. Make an exposure and develop both films.
6. Repeat steps 3 through 7 for all combinations of beam apertures and SID.

C. Verification of Compliance

1. Verify that beam-limiting devices that have fixed apertures or multiple fixed apertures are clearly and permanently marked with each image-receptor size and SID combination for which they are designed. For multiple fixed-aperture beam-limiting devices, an indication must be present to indicate which aperture is in position for use.
2. For each image-receptor support intended for installation on a system designed only for mammography, verify that it has clear and permanent markings indicating the maximum image-receptor size for which it is designed.
3. On the film placed into the image-receptor support assembly, verify that the three edges of the X-ray field are contained within the film except for the edge closest to the patient.
4. On the second film placed on the image-receptor support assembly, verify that the X-ray field does not extend beyond the edge of the image receptor closest to the patient by more than 2 percent of the SID as identified by the metal markers.

NEMA Standard 5-15-1979.

XR 8-2.33 TRANSMISSION OF PRIMARY BEAM THROUGH IMAGE RECEPTOR SUPPORT

REQUIREMENT—For X-ray systems manufactured after September 5, 1978, which are designed only for mammography, the transmission of the primary beam through any image-receptor support provided with the system shall be limited such that the exposure 5 centimeters from any accessible surface beyond the plane of the image-receptor supporting device does not exceed 0.1 milliroentgen for each activation of the tube. [See 21 CFR 1020.31(1).]

Copyright National Electrical Manufacturers Association
Provided by IHS under license with NEMA
No reproduction or networking permitted without license from IHS
Not for Resale

A. General

Observe the ratings of the tube unit and X-ray system (consult rating charts) to prevent damage to the tube or system, or both.

B. Equipment

Radiation detecting device having a 100-square-centimeter chamber with no linear dimension greater than 20 centimeters.

C. Procedure 

1. Set the tube head for the minimum source-to-image distance (SID) for which it is designed.
2. Set the technique factors for the maximum rated peak-tube potential and at the maximum rated product of tube current and exposure time (mAs) for that peak-tube potential.
3. Support the radiation detector chamber 5 centimeters from any accessible surface beyond the plane of the image-receptor supporting device.
4. Make an exposure and record reading.
5. Reposition chamber and repeat steps 3 and 4 until the entire area beyond the image-receptor supporting device has been surveyed.

D. Verification of Compliance

Any radiation measurement recorded must not exceed 0.1 milliroentgen.

NEMA Standard 5-15-1979.

Copyright National Electrical Manufacturers Association
Provided by IHS under license with NEMA
No reproduction or networking permitted without license from IHS
Not for Resale

APPENDIX A

REFERENCED PUBLICATIONS

Below is a complete listing of the titles and publication numbers of all publications referenced, in part or in full, in this standards publication. The mailing address of each referenced organization is also provided.

I

The Aluminum Association
818 Connecticut Avenue, N.W.
Washington, DC 20006

ASD-1 1979 *Aluminum Standards and Data*

II

National Council on Radiation Protection and Measurements
7910 Woodmont Avenue
Washington, DC 20014

No. 33 *Medical X-ray and Gamma-ray Protection for Energies up to 10 MeV—Equipment Design and Use*

III

U.S. Department of Health, Education, and Welfare
Public Health Service
Food and Drug Administration
Bureau of Radiological Health
Rockville, MD 20857

For sale by Superintendent of Documents
U.S. Government Printing Office
Washington, DC 20402
Stock No. 017-012-00274-9

(FDA) 79-8035
[21 CFR Subchapter J] *Regulations for the Administration and Enforcement of The Radiation Control Health and Safety Act of 1968*

PROBLEM HARD COPY

Copyright National Electrical Manufacturers Association
Provided by IHS under license with NEMA
No reproduction or networking permitted without license from IHS
Not for Resale

NEMA STANDARDIZATION

The purpose of NEMA Standards, their classification and status are set forth in certain clauses of the NEMA Bylaws, which are quoted below:

Purpose of Standards

National Electrical Manufacturers Association Standards are adopted in the public interest and are designed to eliminate misunderstandings between the manufacturer and the purchaser and to assist the purchaser in selecting and obtaining the proper product for its particular need. Existence of a National Electrical Manufacturers Association Standard does not in any respect preclude any member or nonmember from manufacturing or selling products not conforming to the standard.

(Bylaw—Art. V, Sec. 1)

Definition of a Standard

A standard of the National Electrical Manufacturers Association defines a product, process or procedure with reference to one or more of the following: nomenclature, composition, construction, dimensions, tolerances, safety, operating characteristics, performance, rating, testing, and the service for which they are designed.

(Bylaw—Art. V, Sec. 2, Subsection A)

Dimensions

Where dimensions are given for interchangeability purposes, alternate dimensions satisfying the other provisions of the standards publication may be capable of otherwise equivalent performance.

(NEMA Policy Memorandum 84-2, dated June 7, 1984)

Classes of Standards

National Electrical Manufacturers Association Standards are of two classes:

1. NEMA Standard, which relates to a product commercially standardized and subject to repetitive manufacture, which standard has been approved by at least 90 percent of the members of the Subdivision eligible to vote thereon;
2. Suggested Standard for Future Design, which may not have been regularly applied to a commercial product, but which suggests a sound engineering approach to future development, which standard has been approved by at least two-thirds of the members of the Subdivision eligible to vote thereon.

(Bylaw—Art. V, Sec. 2, Subsection B)

Authorized Engineering Information

Authorized Engineering Information consists of explanatory data and other engineering information of an informative character not falling within the classification of NEMA Standard or Suggested Standard for Future Design.

(Bylaw—Art. V, Sec. 6, 1st Sentence)

Official Standards Proposal

An Official Standards Proposal is an official draft of a proposed standard which is formally recommended to an outside organization(s) for consideration, comment and/or approval.

(Bylaw—Art. V, Sec. 4, Subsection A)

Identification of Status

Standards in NEMA Standards Publications are identified in the foreword or following each standard as "NEMA Standard" or "Suggested Standard for Future Design." These indicate the status of the standard. These words are followed by a date which indicates when the standard was adopted in its present form by the Association.

The material identified as "Authorized Engineering Information" and "Official Standards Proposal" is designated similarly.

Copyright National Electrical Manufacturers Association
Provided by IHS under license with NEMA
No reproduction or networking permitted without license from IHS
Not for Resale

X-RAY IMAGING PRODUCTS SECTION
OF THE
NATIONAL ELECTRICAL MANUFACTURERS ASSOCIATION

MEMBERS COMPANIES

Advanced Instrument Development, Inc.
Melrose Park, IL 60160

American Radiologic Systems, Inc.
Melrose Park, IL 60160

American Science & Engineering, Inc.
Cambridge, MA 02139

Belmont Equipment Corp.
Somerset, NJ 08873

Bennett X-Ray Corp.
Freeport, NY 11520

Capintec Instruments, Inc.
Pittsburgh, PA 15238

Chemetron Universal X-Ray
Chicago, IL 60651

Continental X-Ray Corp.
Chicago, IL 60606

Dent-X Corp.
Stamford, CT 06902

EIMAC
Division of Varian
Salt Lake City, UT 84104

Elema-Schonander, Inc.
Elk Grove Village, IL 60007

Eureka X-Ray Tube Co.
Chicago, IL 60641

H. G. Fischer, Inc.
Franklin Park, IL 60131

General Electric Co.
Medical Systems Division
Milwaukee, WI 53201

High Voltage Engineering Corp.
Burlington, MA 01803

Honeywell, Inc.
Test Instruments Division
Denver, CO 80217

Liebel-Flarsheim Co.
Cincinnati, OH 45215

Machlett Laboratories, Inc., The
Stamford, CT 06907

Nuclear Associates Div. of
Victoreen, Inc.
Carle Place, NY 11514

Oldelft Corporation of America
Fairfax, VA 22030

Pennwalt
S.S. White Dental Products Division
Philadelphia, PA 19102

Philips Medical Systems, Inc.
Shelton, CT 06484

Picker Corp.
Cleveland, OH 44143

Radiologic Sciences, Inc.
New York, NY 10017

Siemens Corp.
Iselin, NJ 08830

Standard X-Ray Co.
Hoffman Estates, IL 60172

Sybron Corp.
Dental Products Div.
Rochester, NY 14603

Thomson-CSF Electron Tubes
Clifton, NJ 07105

Toshiba International Corp.
Toshiba Medical Systems Division
Carson, CA 90745

Xerox Corp.
Pasadena, CA 91107

Xonics Medical Systems
Des Plaines, IL 60018

Printed in U.S.A.

Copyright National Electrical Manufacturers Association
Provided by IHS under license with NEMA
No reproduction or networking permitted without license from IHS
Not for Resale
PROBLEM HARD COPY