National Electrical Manufacturers Association
2101 L Street, N.W. Suite 300
Washington, D.C. 20037 (202) 457-8400

PROPOSED, NEW AND REVISED STANDARDS

TO ALL REPRESENTATIVES OF MEMBER COMPANIES IN THE
X-RAY IMAGING PRODUCTS SECTION

Subject: Revision No. **2** to NEMA Standards Publication for *High-Voltage X-Ray Cables and Receptacles*, NEMA Pub. No. **XR 7-1979 (R1984).**

Dear Representative:

Revision No. **2**, consisting of pages dated OCTOBER 1987, is enclosed for insertion into your copy of the subject publication. Also enclosed is a title page to indicated that your book now contains Revisions 1 and 2.

To bring you copy of NEMA Publication No. XR 7-1979 (R1984) up-to-date, please insert the attached revised pages in their proper place and delete the pages they replace.

Sincerely,

Krystyna McIver
Standards Publications Editor
NEMA

Encl: Revision No. **2** to XR 7-1979 (R1984).
Copies to: All known holders of XR 7.

Copyright National Electrical Manufacturers Association
Provided by IHS under license with NEMA
No reproduction or networking permitted without license from IHS
Not for Resale

NATIONAL ELECTRICAL MANUFACTURERS ASSOCIATION

2101 L STREET N.W. WASHINGTON, D.C. 20037

TO ALL REPRESENTATIVES OF MEMBER COMPANIES
IN THE X-RAY IMAGING PRODUCTS SECTION

Subject: Revision No. 1 (Editorial) to NEMA Standards Publication No. XR 7-1979, *High-voltage X-Ray Cables and Receptacles*

Gentlemen:

The X-Ray Imaging Products Section has issued several editorial corrections to the subject publication.

Enclosed for insertion in your copy of the book are revised pages 5 through 8, dated January 1980, which incorporate the editorial corrections. Please insert the revised pages carefully as extra copies are not available.

Sincerely yours,

Judy P. Sopronyi

Judy P. Sopronyi
Standards Publications Editor

cc: All Known Holders of XR 7-1979
X-Ray Tube Subcommittee

Copyright National Electrical Manufacturers Association
Provided by IHS under license with NEMA
No reproduction or networking permitted without license from IHS
Not for Resale

STANDARDS PUBLICATION / NO. XR 7-1979

nema

high-voltage x-ray cables and receptacles

NEMA

Copyright National Electrical Manufacturers Association
Provided by IHS under license with NEMA
No reproduction or networking permitted without license from IHS
Not for Resale

ELECTRICAL MANUFACTURERS ASSOCIATION 2101 L STREET, N.W., WASHINGTON, D.C. 20037

XR 7-79 6470247 0007967 5

XR 7

HIGH VOLTAGE X-RAY CABLES AND RECEPTACLES

Revision No. 1—January 1980
Revision No. 2—October 1987

Published by

National Electrical Manufacturers Association
2101 L Street, N.W.
Washington, D.C. 20037

©1988 by National Electrical Manufacturers Association

Copyright National Electrical Manufacturers Association
Provided by IHS under license with NEMA
No reproduction or networking permitted without license from IHS

Not for Resale

TABLE OF CONTENTS

		Page
	FOREWORD	i
	PURPOSE	ii
	SCOPE	ii
Part 1	STRUCTURAL AND DESIGN TESTS	
	General	1
	Test Conditions	1
	Overvoltage Test	1
	Life Test	1
	Contact Resistance Test	1
	Short-circuit and Continuity Test	1
	Resistance Test	2
	High-voltage Test	2
Part 2	HIGH-VOLTAGE CABLE REQUIREMENTS	
	General	3
	Cable Capacitance	3
	Outer Shield	3
Part 3	STRUCTURAL DETAILS	
	Dimensions	4

Copyright National Electrical Manufacturers Association
Provided by IHS under license with NEMA
No reproduction or networking permitted without license from IHS
Not for Resale

HIGH-VOLTAGE X-RAY CABLES AND RECEPTACLES

Foreword

User needs have been considered throughout the development of this publication.

This standards publication has been prepared by the X-ray Tube Subcommittee, X-ray Imaging Products Section, of the National Electrical Manufacturers Association.

NEMA standards publications are required to be reviewed periodically and are frequently revised to reflect changing conditions and technical progress. Comments are welcomed and should be addressed to:

Manager, Engineering Department
National Electrical Manufacturers Association
2101 L Street, N.W.
Washington, D.C. 20037

Copyright National Electrical Manufacturers Association
Provided by IHS under license with NEMA
No reproduction or networking permitted without license from IHS
Not for Resale

Purpose

The purpose of this standards publication is an attempt to improve the compatibility of the high-voltage cables and receptacles used in medical diagnostic X-ray equipment. This effort required the establishment of the structural details and minimum electrical requirements necessary to achieve this goal.

Scope

These standards define test methods and structural details of the high-voltage cable assemblies and receptacles used in medical diagnostic X-ray equipment to establish minimum electrical requirements and component interchangeability.

Copyright National Electrical Manufacturers Association
Provided by IHS under license with NEMA
No reproduction or networking permitted without license from IHS

Not for Resale

Part 1

STRUCTURAL AND DESIGN TESTS

XR 7-1.01 GENERAL

The tests described in this part are applicable to the following types of x-ray cables:

Type I — nominal 62.5 peak kilovolts to grounded shield, 3-conductor.

Type II — nominal 75.0 peak kilovolts to grounded shield, 3-conductor.

TypeIII— nominal 75.0 peak kilovolts to grounded shield, 4-conductor.

NEMA Standard 5-15-1979.

XR 7-1.02 TEST CONDITIONS

The tests shall be conducted in such a way as to constitute a check on the operation of the cable, its terminal, and the receptacle into which the terminal is inserted while in normal service with the shield grounded. The receptacle shall be mounted in an oil-filled container with adequate clearance in the oil-filled space to permit application of the specified voltage without arc-over and with means for maintaining the oil at the specified temperature. The cable terminals shall be coated with a suitable air-excluding compound, such as silicone grease, prior to insertion in the receptacles.

NEMA Standard 5-15-1979.

XR 7-1.03 OVERVOLTAGE TEST

The overvoltage test shall be performed with rectified voltage and in accordance with Table 1-1. All inner core conductors shall be tied together except during the overvoltage test of the grid conductor when the voltage shall be applied between the grid control and inner core conductors tied together. No breakdown shall occur.

NEMA Standard 5-15-1979.

Table 1-1
OVERVOLTAGE TEST VALUES

Type of Cable	Voltage Peak, Kilovolts	Oil Temperature	Time, Minutes
I	78	Room	15
II	94	Room	15
III	94	Room	15
III grid control conductor	8	Room	15

XR 7-1.04 LIFE TEST

The life test shall be performed with unrectified 60-hertz alternating voltage and in accordance with Table 1-2. All inner core conductors shall be tied together except during the overvoltage test of the grid conductor when the voltage shall be applied between the grid control conductor and inner core conductors tied together. No breakdown shall occur.

NEMA Standard 5-15-1979.

Table 1-2
LIFE TEST VALUES

Type of Cable	Voltage Peak, Kilovolts	Oil Temperature, Degrees C	Time, Hours
I	60	100	200
II	70	100	200
III	70	100	200
III grid control conductor	5	100	200

XR 7-1.05 CONTACT RESISTANCE TEST

The contact resistance between each mating male and female contact member shall be measured after 100 disconnects.

The contact resistance between each mating male and female contact member shall not exceed 0.001 ohm after 100 disconnects. (Resistance of contacts for grid is not included in this specification.)

NEMA Standard 5-15-1979.

XR 7-1.06 SHORT-CIRCUIT AND CONTINUITY TEST

Core conductors other than grid control conductors shall be checked for continuity, short circuit, proper connections from terminal to terminal, and continuity of the cable sheath to the grounded terminal connections. The interconductor test voltage shall be applied for 1 minute and shall be not less than 115 volts, 60 hertz.

The continuity of the cable sheath to grounding connection shall be verified.

NEMA Standard 5-15-1979.

Copyright National Electrical Manufacturers Association
Provided by IHS under license with NEMA
No reproduction or networking permitted without license from IHS
Not for Resale

XR 7-1.07 RESISTANCE TEST

With the cable terminals inserted in suitable receptacles, each of the three filament current conductors shall be separately checked by measuring the voltage drop of the conductor, including contact members of the receptacles, with a current of 12 amperes flowing therein.

The voltage drop shall not exceed 0.065 volts for each foot of cable length for Type I cable and 0.040 volts for each foot of conductor length for Type II cable. (The grid wire is excluded from this test requirement.)

NEMA Standard 5-15-1979.

XR 7-1.08 HIGH-VOLTAGE TEST

The high-voltage test shall be performed with 60-hertz alternating voltage and in accordance with Table 1-3. All inner core conductors shall be tied together except during the overvoltage test of the grid conductor when the voltage shall be applied between the grid conductor and inner core conductors tied together. No breakdown shall occur.

NEMA Standard 5-15-1979.

Table 1-3
HIGH-VOLTAGE TEST VALUES

Type of Cable	Voltage Peak, Kilovolts	Oil Temperature	Time, Minutes
I	60	Room	5
II	70	Room	5
III	70	Room	5
III grid control conductor	5	Room	5

Copyright National Electrical Manufacturers Association
Provided by IHS under license with NEMA
No reproduction or networking permitted without license from IHS

Not for Resale

Part 2

HIGH-VOLTAGE CABLE REQUIREMENTS

XR 7-2.01 GENERAL

The cable shall meet the electrical requirements of Part 1. Additionally, its configuration shall provide a shock-resistant braided shield with a plastic cover resistant to abrasion and stain normally present in the environment in which the cable is used. It shall be sufficiently flexible to allow 50,000 cycles through a 3-inch bend radius and still meet the mechanical and electrical requirements of these standards.

NEMA Standard 5-15-1979.

XR 7-2.02 CABLE CAPACITANCE

The cable capacitance per foot shall not exceed the following limits:

(1) *For 3-conductor cables*—50 pico farads per foot between combined core conductors and outer sheath.

(2) *For 4-conductor cables*—60 pico farads per foot between combined core conductors and outer sheath and 70 pico farads per foot between grid control conductor and combined inner core conductors.

NEMA Standard 5-15-1979.

XR 7-2.03 OUTER SHIELD

The outer grounded shield shall provide a minimum coverage of 80 percent over the high-voltage insulation.

NEMA Standard 5-15-1979.

Copyright National Electrical Manufacturers Association
Provided by IHS under license with NEMA
No reproduction or networking permitted without license from IHS
Not for Resale

Part 3

STRUCTURAL DETAILS

XR 7-3.01 DIMENSIONS

The components shall comply with the dimensions given in Figs. 3-1 through 3-4 to assure interchangeability.

NEMA Standard 5-15-1979.

The dimensions given in parentheses in Figs. 3-1 through 3-4 are not critical to interchangeability and are at the discretion of the manufacturer. The projections of Figs. 3-1 through 3-4 are in accordance with U.S. Drafting Practices.

Authorized Engineering Information 5-15-1979.

Copyright National Electrical Manufacturers Association
Provided by IHS under license with NEMA
No reproduction or networking permitted without license from IHS

Not for Resale

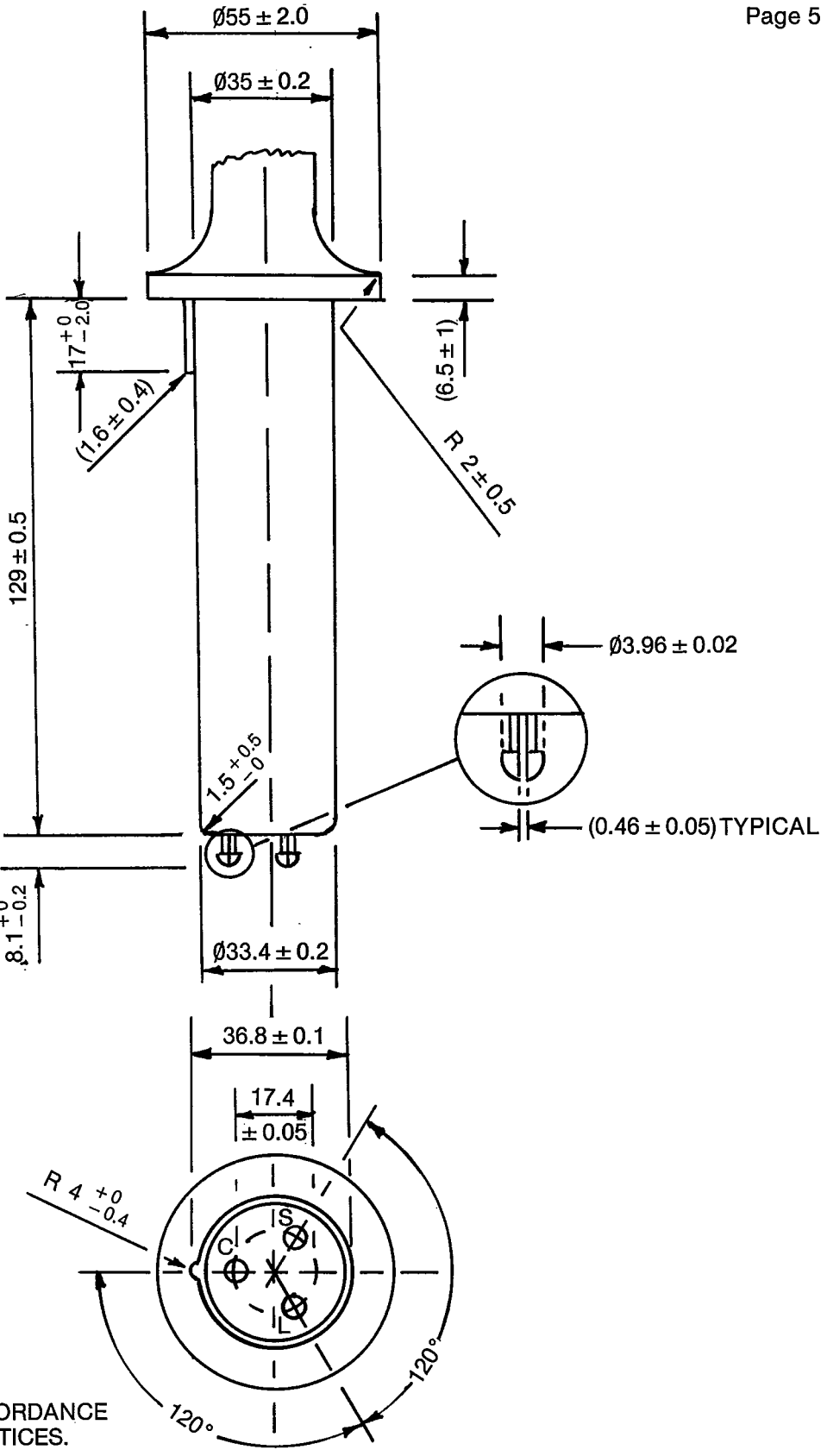

PROJECTIONS ARE IN ACCORDANCE WITH U.S. DRAFTING PRACTICES.

DIMENSIONS IN MILLIMETERS.

Fig. 3-1▲
THREE-TERMINAL PLUG

▲Editorially revised.

Copyright National Electrical Manufacturers Association
Provided by IHS under license with NEMA
No reproduction or networking permitted without license from IHS

Not for Resale

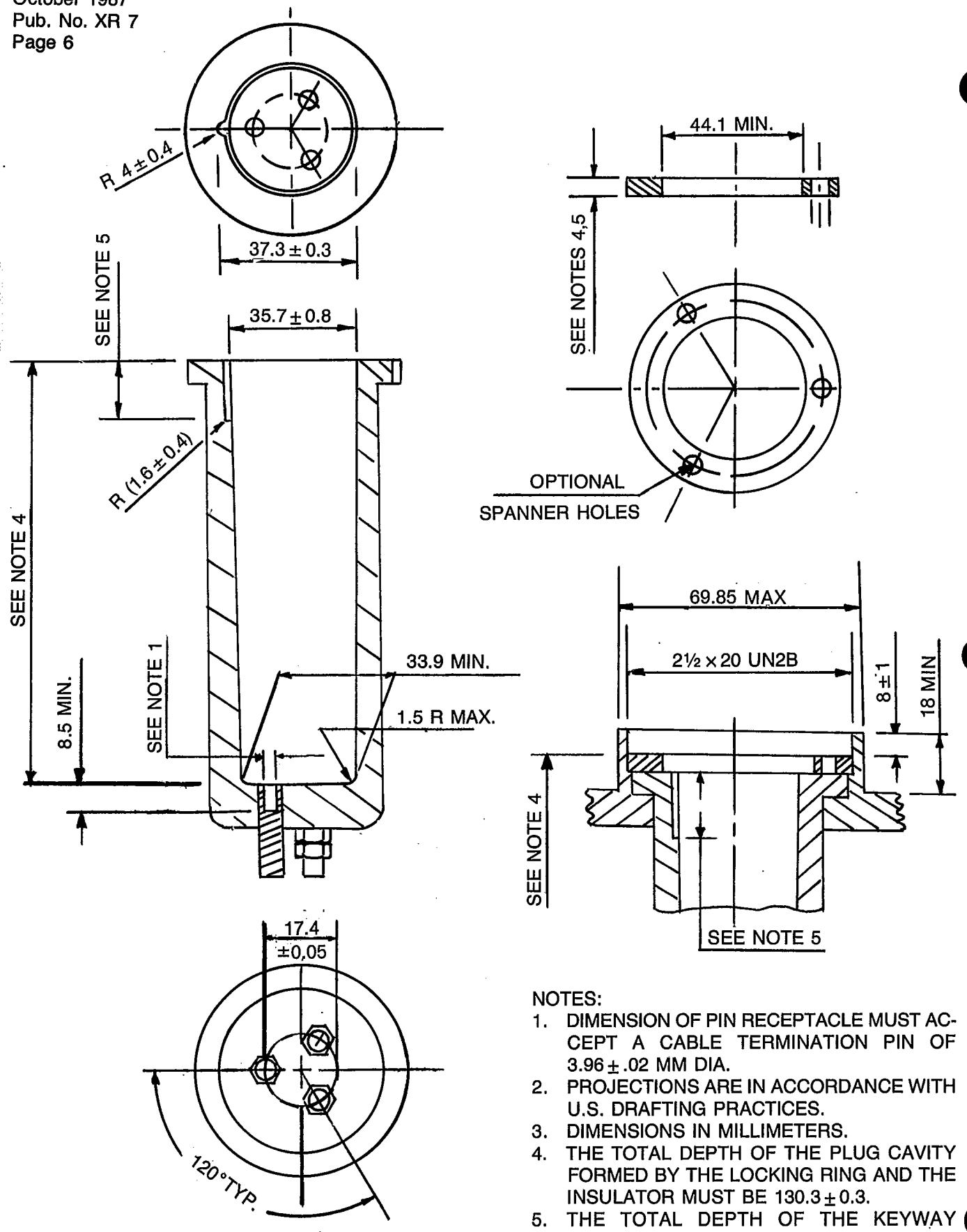

NOTES:

1. DIMENSION OF PIN RECEPTACLE MUST ACCEPT A CABLE TERMINATION PIN OF 3.96 ± .02 MM DIA.
2. PROJECTIONS ARE IN ACCORDANCE WITH U.S. DRAFTING PRACTICES.
3. DIMENSIONS IN MILLIMETERS.
4. THE TOTAL DEPTH OF THE PLUG CAVITY FORMED BY THE LOCKING RING AND THE INSULATOR MUST BE 130.3 ± 0.3.
5. THE TOTAL DEPTH OF THE KEYWAY GROOVE, FORMED BY THE LOCKING RING, AND THE INSULATOR MUST BE 20.4 MM MIN.

Fig. 3-2
THREE-TERMINAL RECEPTACLE

Copyright National Electrical Manufacturers Association
Provided by IHS under license with NEMA
No reproduction or networking permitted without license from IHS
Not for Resale

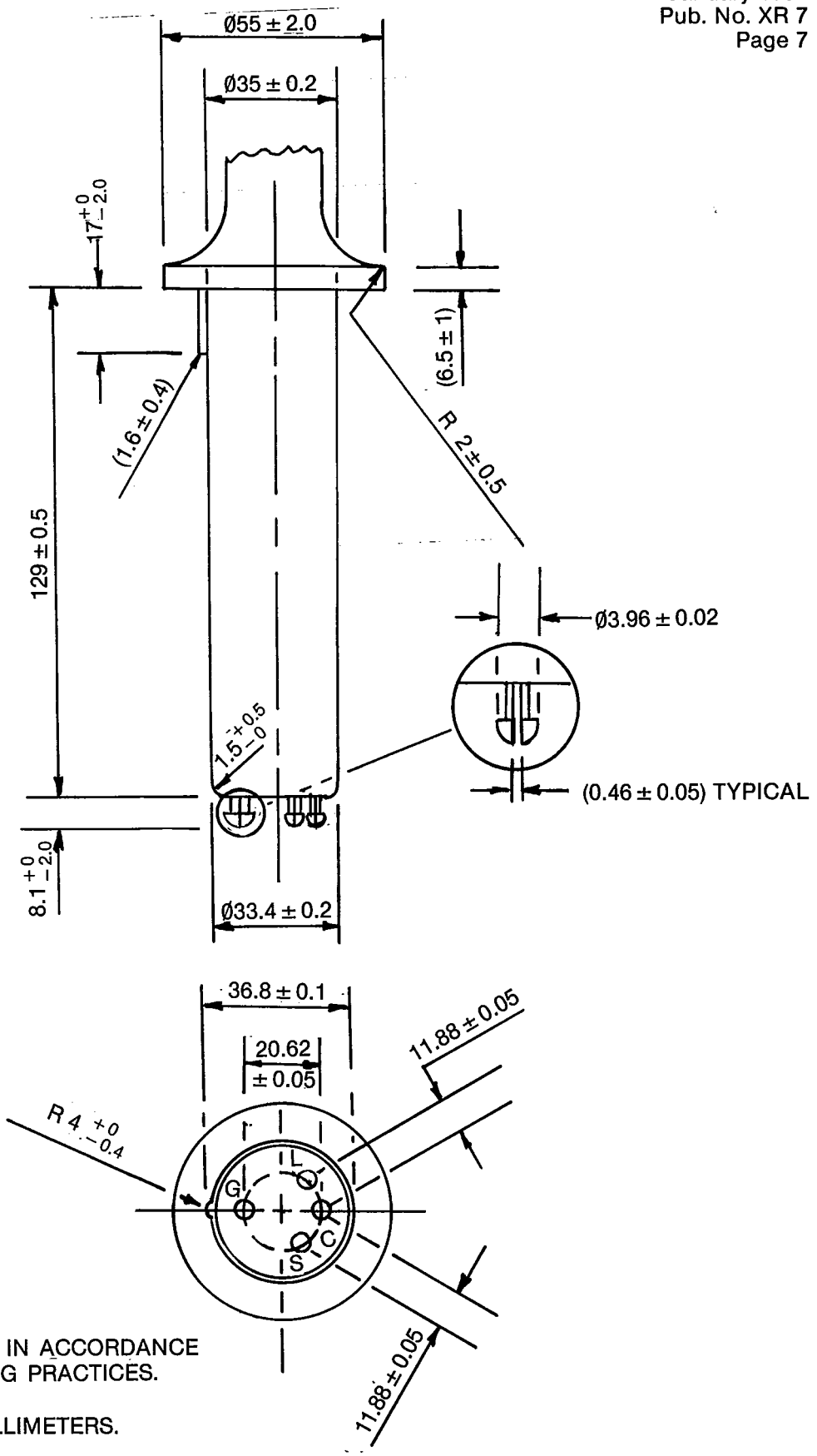

PROJECTIONS ARE IN ACCORDANCE WITH U.S. DRAFTING PRACTICES.

DIMENSIONS IN MILLIMETERS.

Fig. 3-3 ▲
FOUR-TERMINAL PLUG

▲ Editorially revised.

Copyright National Electrical Manufacturers Association
Provided by IHS under license with NEMA
No reproduction or networking permitted without license from IHS
Not for Resale

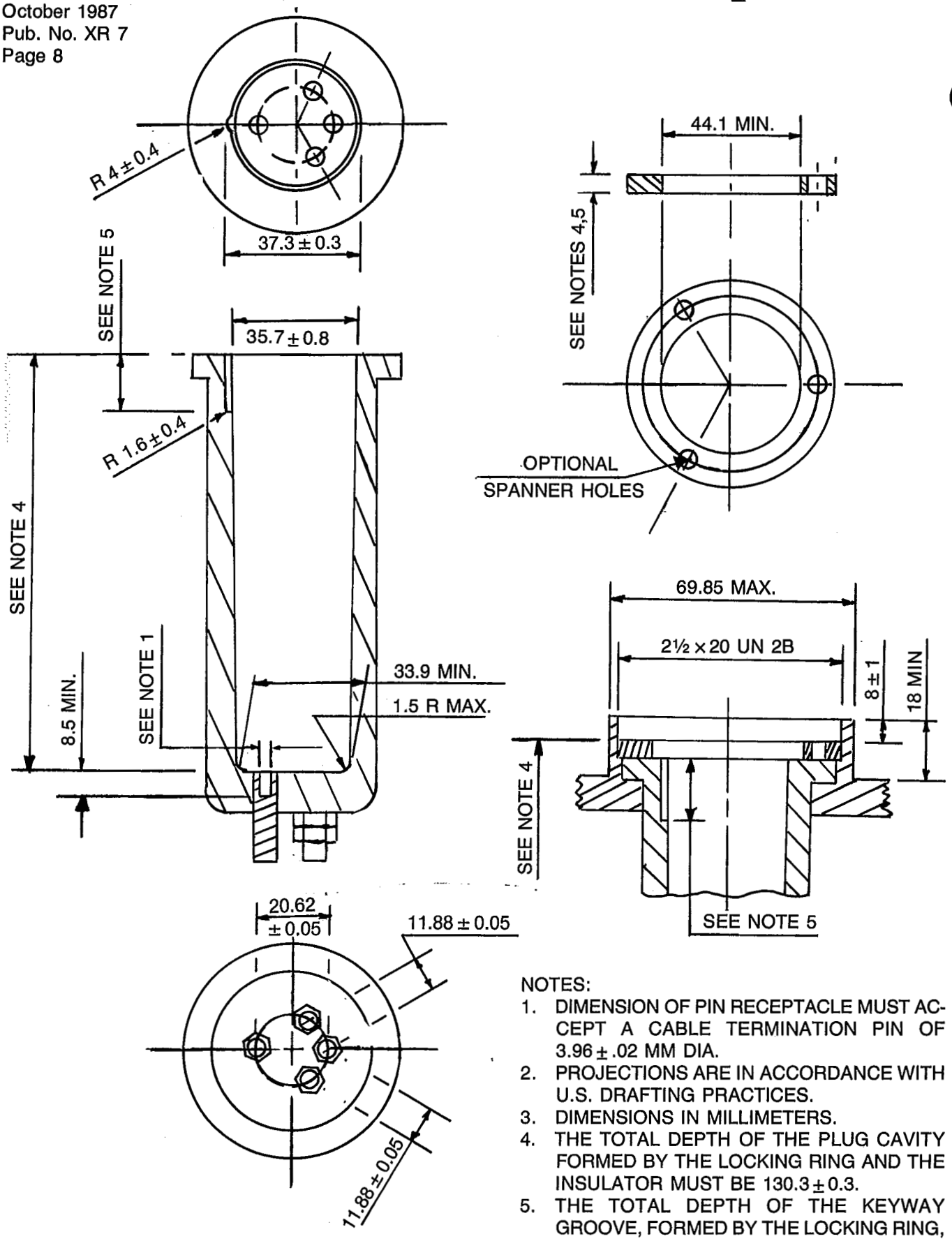

NOTES:

1. DIMENSION OF PIN RECEPTACLE MUST ACCEPT A CABLE TERMINATION PIN OF 3.96 ± .02 MM DIA.
2. PROJECTIONS ARE IN ACCORDANCE WITH U.S. DRAFTING PRACTICES.
3. DIMENSIONS IN MILLIMETERS.
4. THE TOTAL DEPTH OF THE PLUG CAVITY FORMED BY THE LOCKING RING AND THE INSULATOR MUST BE 130.3 ± 0.3.
5. THE TOTAL DEPTH OF THE KEYWAY GROOVE, FORMED BY THE LOCKING RING, AND THE INSULATOR MUST BE 20.4 MM MIN.

Fig. 3-4
FOUR-TERMINAL RECEPTACLE

Copyright National Electrical Manufacturers Association
Provided by IHS under license with NEMA
No reproduction or networking permitted without license from IHS
Not for Resale

NEMA STANDARDIZATION

The purpose of NEMA Standards, their classification and status are set forth in certain clauses of the NEMA Bylaws, which are quoted below:

Purpose of Standards

National Electrical Manufacturers Association Standards are adopted in the public interest and are designed to eliminate misunderstandings between the manufacturer and the purchaser and to assist the purchaser in selecting and obtaining the proper product for its particular need. Existence of a National Electrical Manufacturers Association Standard does not in any respect preclude any member or nonmember from manufacturing or selling products not conforming to the standard.

(Bylaw—Art. V, Sec. 1)

Definition of a Standard

A standard of the National Electrical Manufacturers Association defines a product, process or procedure with reference to one or more of the following: nomenclature, composition, construction, dimensions, tolerances, safety, operating characteristics, performance, quality, rating, testing and the service for which designed.

(Bylaw—Art. V, Sec. 2, Subsection A)

Classes of Standards

National Electrical Manufacturers Association Standards are of two classes:

1. NEMA Standard, which relates to a product commercially standardized and subject to repetitive manufacture, which standard has been approved by at least 90 percent of the members of the Subdivision eligible to vote thereon;
2. Suggested Standard for Future Design, which may not have been regularly applied to a commercial product, but which suggests a sound engineering approach to future development, which standard has been approved by at least two-thirds of the members of the Subdivision eligible to vote thereon.

(Bylaw—Art. V, Sec. 2, Subsection B)

Authorized Engineering Information

Authorized Engineering Information consists of explanatory data and other engineering information of an informative character not falling within the classification of NEMA Standard or Suggested Standard for Future Design.

(Bylaw—Art. V, Sec. 6, 1st Sentence)

Official Standards Proposal

An Official Standards Proposal is an official draft of a proposed standard which is formally recommended to an outside organization(s) for consideration, comment and/or approval.

(Bylaw—Art. V, Sec. 4, Subsection A)

Identification of Status

Standards in NEMA Standards Publications are identified in the foreword or following each standard as "NEMA Standard" or "Suggested Standard for Future Design." These indicate the status of the standard. These words are followed by a date which indicates when the standard was adopted in its present form by the Association.

The material identified as "Authorized Engineering Information" and "Official Standards Proposal" is designated similarly.

Copyright National Electrical Manufacturers Association
Provided by IHS under license with NEMA
No reproduction or networking permitted without license from IHS
Not for Resale

X-RAY IMAGING PRODUCTS SECTION
OF THE
NATIONAL ELECTRICAL MANUFACTURERS ASSOCIATION

MEMBERS COMPANIES

Advanced Instrument Development, Inc.
Melrose Park, IL 60160

American Radiologic Systems, Inc.
Melrose Park, IL 60160

American Science & Engineering, Inc.
Cambridge, MA 02139

Belmont Equipment Corp.
Somerset, NJ 08873

Bennett X-Ray Corp.
Freeport, NY 11520

Capintec Instruments, Inc.
Pittsburgh, PA 15238

Chemetron Universal X-Ray
Chicago, IL 60651

Continental X-Ray Corp.
Chicago, IL 60606

Dent-X Corp.
Stamford, CT 06902

EIMAC
ADivision of Varian
Salt Lake City, UT 84104

Elema-Schonander, Inc.
Elk Grove Village, IL 60007

Eureka X-Ray Tube Co.
Chicago, IL 60641

H. G. Fischer, Inc.
Franklin Park, IL 60131

General Electric Co.
Medical Systems Division
Milwaukee, WI 53201

High Voltage Engineering Corp.
Burlington, MA 01803

Honeywell, Inc.
Test Instruments Division
Denver, CO 80217

Liebel-Flarsheim Co.
Cincinnati, OH 45215

Machlett Laboratories, Inc., The
Stamford, CT 06907

Nuclear Associates Div. of
Victoreen, Inc.
Carle Place, NY 11514

Oldelft Corporation of America
Fairfax, VA 22030

Pennwalt
S.S. White Dental Products Division
Philadelphia, PA 19102

Philips Medical Systems, Inc.
Shelton, CT 06484

Picker Corp.
Cleveland, OH 44143

Radiologic Sciences, Inc.
New York, NY 10017

Siemens Corp.
Iselin, NJ 08830

Standard X-Ray Co.
Hoffman Estates, IL 60172

Sybron Corp.
Dental Products Div.
Rochester, NY 14603

Thomson-CSF Electron Tubes
Clifton, NJ 07105

Toshiba International Corp.
Toshiba Medical Systems Division
Carson, CA 90745

Xerox Corp.
Pasadena, CA 91107

Xonics Medical Systems
Des Plaines, IL 60018

XRC, Inc.
Hialeah, FL 33010

Printed in U.S.A.

Copyright National Electrical Manufacturers Association
Provided by IHS under license with NEMA
No reproduction or networking permitted without license from IHS
Not for Resale