NEMA XR*5 92 6470247 0501501 269

STANDARDS PUBLICATION NO. XR 5

nema

Measurement of Dimensions and Properties of Focal Spots of Diagnostic X-Ray Tubes

NEMA

NATIONAL ELECTRICAL MANUFACTURERS ASSOCIATION ■ 2101 L STREET, N.W., WASHINGTON, D.C. 20037

Copyright National Electrical Manufacturers Association
Provided by IHS under license with NEMA
No reproduction or networking permitted without license from IHS
Not for Resale

NEMA XR*5 92 6470247 0501502 1T5

NEMA XR 5-1992

XR 5

MEASUREMENT OF DIMENSIONS AND PROPERTIES OF FOCAL SPOTS OF DIAGNOSTIC X-RAY TUBES

Published by

National Electrical Manufacturers Association
2101 L Street, N.W., Suite 300
Washington, D.C. 20037-1526

© 1992 by National Electrical Manufacturers Association

Copyright National Electrical Manufacturers Association
Provided by IHS under license with NEMA
No reproduction or networking permitted without license from IHS
Not for Resale

TABLE OF CONTENTS

	FOREWORD	i
	SCOPE	iii
Section 1	DEFINITIONS	1
Section 2	SLIT CAMERA METHOD OF MEASUREMENT	3
	Basic Method	3
	Slit Camera	3
	Imaging Procedure	4
	Photographic Technique	4
	Electrical Conditions	4
	Measurement of X-Ray Image	4
	Statement of Compliance	4
Section 3	FOCAL SPOT BLOOMING	9
	Exposure Factors	9
	Measurement Procedure	9
Section 4	RESOLUTION CAMERA (STAR PATTERN) METHOD OF EVALUATION	11
	Basic Method	11
	Star Pattern Camera	11
	Radiographic Film	11
	Photographic Technique	13
	Electrical Conditions	13
	Determination of Focal Spot Resolution (R)	13
Section 5	PINHOLE CAMERA METHOD OF EVALUATION	15
	Introduction	15
	Basic Method	15
	Pinhole Camera	15
	Photographic Technique	15
	Electrical Conditions	15
	Method of Observation	15
Section 6	MEASUREMENT CORRELATION	17
	Introduction	17
	Basic Method	17
	Applicable Dimensions	17
Section 7	DETERMINATION OF MODULATION TRANSFER FUNCTION (MTF) OF THE FOCAL SPOT	21
	General Information	21
	Measurement	21
	Calculation of the MTF	21
TABLES		
2-1	Test Conditions	6
2-2	Focal Spot Size Tolerance Limits (for slit camera method)	8
3-1	Test Conditions (Blooming)	10
5-1	Pinhole Diaphragm Dimensions	16
5-2	ENLARGEMENT FACTOR (E) for Pinhole Camera	16
7-1	Standard Magnification of MODULATION TRANSFER FUNCTIONS	22
FIGURES		
2-1	Slit Diaphragm	3
2-2	Evaluation Directions for Focal Spots	4
2-3	Amount of Contribution to Image Size due to Slit Width	5

Copyright National Electrical Manufacturers Association
Provided by IHS under license with NEMA
No reproduction or networking permitted without license from IHS
Not for Resale

2-4 Imaging Geometry 7
2-5 Determination of ENLARGEMENT FACTOR (E) 7
2-6 Tube Nameplate 8
4-1 Essential Dimensions of the Test Pattern 12
4-2 Alignment of the Star Pattern Camera 12
4-3 Image of the Test Pattern 13
5-1 Cross-Section of Pinhole Diaphragm 16
6-1 Correlation Geometry for EFFECTIVE FOCAL SPOT length determination 18
6-2 Projection of the ACTUAL FOCAL SPOT over the radiation field 19
7-1 Microdensitometer Scan 21
7-2 Limitation of Input Data 22

Copyright National Electrical Manufacturers Association
Provided by IHS under license with NEMA
No reproduction or networking permitted without license from IHS
Not for Resale

Foreword

This publication describes three methods of assessing the properties of the focal spot for medical diagnostic X-ray tubes. User needs have been considered throughout the development of this standard. Test methods and performance values have been defined for correlation to end-use application.

Historically, the size designation was based on the approximate measured size when using exposure factors 75 kV and fluoroscopic level tube current. Then, as now, the tolerances were on the plus side, since the tube could not be safely loaded to its published rating with an undersized focal spot.

To provide the user with a better indication of the focal spot size under normal working conditions, more recent standards specified that the size was to be measured at 75 kV and half the rated load. These standards used the same NOMINAL FOCAL SPOT designation as the earlier standards or measuring methods.

The focal spot of a diagnostic X-ray tube can be described in terms of its size and intensity distribution. For most X-ray tubes presently in use the focal spot is non-isotropic, usually having a twin-peaked intensity distribution. Its size and intensity distribution can further be affected by changes in voltage and current applied to the X-ray tube. The focal spot is often enlarged as current is increased and voltage is reduced. The BLOOMING measurement may be used to inform the user of the change in focal spot size when the tube is operated at full load rating. The rated power loading is a function of the size and intensity distribution of the focal spot, as well as of other parameters.

The primary method for assessing focal spot characteristics shall be based on the use of the SLIT CAMERA. Images obtained from this technique provide focal spot size measurements and BLOOMING. The SLIT CAMERA can be used to measure the full range of focal spot sizes. In addition, the MODULATION TRANSFER FUNCTION (MTF) can be determined from the slit image using a microdensitometer scan and a computer. The MTF can be compared to other components in the radiological system and can be utilized in designing optimum system performance.

The RESOLUTION CAMERA (star pattern) method of measurement utilizes a lead star test pattern to provide the limits of resolving power of the focal spot. This resolution figure of merit can be compared to other components in the radiological system and be utilized in achieving optimum system performance. The star method measures the limit of resolving power of the focal spot but does not provide information about the modulation of the low spatial frequencies. The star resolution method cannot be used for size determination.

The PINHOLE CAMERA provides an image of the focal spot indicating the overall shape and intensity distribution that depicts the cross-section of the electron beam. The pinhole images are especially useful for determining power capabilities from the area measurements and the electron beam power density for different tube types. The resultant image can be used to ascertain the relative location of multiple focal spots, principal orientation and point-to-point focal spot dimensions.

The value of these methods depends on the specific focal spot characteristics requiring analysis. The purpose of this publication is to provide a standard procedure for the use of the three methods.

Copyright National Electrical Manufacturers Association
Provided by IHS under license with NEMA
No reproduction or networking permitted without license from IHS Not for Resale

Methods For Evaluating Specific Aspects Characterizing the Focal Spot

Parameter	Method of Measurement
EFFECTIVE FOCAL SPOT SIZE	SLIT CAMERA
MTF	SLIT CAMERA
Orientation	PINHOLE CAMERA
Intensity Distribution	PINHOLE CAMERA
Limit of Resolving Power	RESOLUTION CAMERA
BLOOMING	SLIT CAMERA

Proposed or recommended revisions should be submitted to:

Vice President, Engineering
National Electrical Manufacturers Association
2101 L Street, N.W., Suite 300
Washington, DC 20037-1526

Copyright National Electrical Manufacturers Association
Provided by IHS under license with NEMA
No reproduction or networking permitted without license from IHS
Not for Resale

Scope

This document provides test methods for assessing the properties of focal spots for medical DIAGNOSTIC X-RAY TUBES and is not intended for use with X-ray tubes used in computed tomography (CT) scanners.

Copyright National Electrical Manufacturers Association
Provided by IHS under license with NEMA
No reproduction or networking permitted without license from IHS
Not for Resale

MEASUREMENT OF DIMENSIONS AND PROPERTIES OF FOCAL SPOTS OF DIAGNOSTIC X-RAY TUBES

Section 1
DEFINITIONS

1.1 ACTUAL FOCAL SPOT

The primary source of X-rays produced at the location where the anode of an X-ray tube intercepts the electron beam.

NEMA Standard 1-8-1992

1.2 BLOOMING

A change in focal spot characteristics that will occur when a diagnostic X-ray tube is operated at decreased potentials and/or increased tube currents as compared to standard test conditions.

NEMA Standard 1-8-1992

1.3 CENTRAL RAY

A line perpendicular to the X-ray port plane and passing through the ACTUAL FOCAL SPOT midpoint.

NEMA Standard 1-8-1992

1.4 DIAGNOSTIC X-RAY TUBE

A high vacuum tube used for medical diagnostic purposes that produces X-rays by bombarding an anode with a beam of electrons accelerated by a potential difference.

NEMA Standard 1-8-1992

1.5 EFFECTIVE FOCAL SPOT (F_{eff})

The size of the ACTUAL FOCAL SPOT as projected along a specified REFERENCE AXIS as measured with the SLIT CAMERA method.

NEMA Standard 1-8-1992

1.6 ENLARGEMENT FACTOR (E)

The ENLARGEMENT FACTORS relate to the change in size of the image of the EFFECTIVE FOCAL SPOT. The ENLARGEMENT FACTOR is the ratio of the slit-film distance to the focal spot-slit distance for the slit method of measurement. The definition also applies to the PINHOLE CAMERA with the pinhole replacing the slit.

NEMA Standard 1-8-1992

1.7 FOCAL SPOT RESOLUTION (R)

A figure of merit of the EFFECTIVE FOCAL SPOT in terms of the limit of resolving power in line pairs per millimeter at a given magnification.

NEMA Standard 1-8-1992

1.8 FOCAL SPOT RESOLUTION IMAGE

The image of the resolution star pattern obtained on an X-ray film under specific conditions.

NEMA Standard 1-8-1992

1.9 MAGNIFICATION FACTOR (M)

The MAGNIFICATION FACTORS relate to the change in size of the image of the object. The MAGNIFICATION FACTOR is the ratio of the focal spot-film (image) distance to the focal spot-test pattern (object) distance.

NEMA Standard 1-8-1992

1.10 MODULATION TRANSFER FUNCTION (MTF)

For a symmetrical line spread function, the MODULATION TRANSFER FUNCTION is the normalized Fourier transform of the focal spot using the equation:

$$M(v) = \frac{\int_{-x_1}^{+x_2} L(x) \cos(2\pi\, vx)\, dx}{\int_{-x_1}^{+x_2} L(x)\, dx}$$

Where:

v	is the spatial frequency,
L(x)	is the LINE SPREAD FUNCTION,
x	is the abscissa.
x_1, x_2	are the lower and upper integration boundaries of the focal spot as derived by truncation (Figure 7-2).

NEMA Standard 1-8-1992

1.11 NOMINAL FOCAL SPOT (F)

Dimensionless numerical value having a specific relation to the dimensions of the EFFECTIVE FOCAL SPOT of an X-ray tube.

NEMA Standard 1-8-1992

1.12 PINHOLE CAMERA

The assembly of equipment, including a pinhole diaphragm, which is used to produce projected focal spot images.

NEMA Standard 1-8-1992

1.13 REFERENCE AXIS

For the purpose of this standard, the REFERENCE AXIS for a radiation source is supplied by the X-ray tube manufacturer and is defined as a line parallel to the REFER-

Copyright National Electrical Manufacturers Association
Provided by IHS under license with NEMA
No reproduction or networking permitted without license from IHS
Not for Resale

ENCE DIRECTION through the center of the ACTUAL FOCAL SPOT.

NEMA Standard 1-8-1992

1.14 REFERENCE AXIS (B)

The angle formed by the intersection of the plane of the ACTUAL FOCAL SPOT and the REFERENCE AXIS.

NEMA Standard 1-8-1992

1.15 REFERENCE DIRECTION

For a radiation source, the specified direction to which characteristics such as REFERENCE AXIS angle, radiation field and specifications with respect to the imaging quality of the radiation source are referenced.

NEMA Standard 1-8-1992

1.16 RESOLUTION CAMERA

The assembly of equipment, including a resolution star pattern that is used for measuring the limits of the resolving power of focal spots.

NEMA Standard 1-8-1992

1.17 SLIT CAMERA

Device to reproduce the intensity distribution in the ACTUAL FOCAL SPOT projected on an X-ray film by means of a slit diaphragm in a direction perpendicular to the axis of the slit.

NEMA Standard 1-8-1992

1.18 TARGET ANGLE (A)

The angle formed by the intersection of the plane of the ACTUAL FOCAL SPOT and the CENTRAL RAY.

NEMA Standard 1-8-1992

Copyright National Electrical Manufacturers Association
Provided by IHS under license with NEMA
No reproduction or networking permitted without license from IHS

Not for Resale

Section 2
SLIT CAMERA METHOD OF MEASUREMENT

2.1 BASIC METHOD

Focal spot slit images shall be produced on a fine grain non-screen X-ray film. The EFFECTIVE FOCAL SPOT size shall be determined from the film image.

NEMA Standard 1-8-1992

2.2 SLIT CAMERA

Focal spot images shall be taken with a SLIT CAMERA containing a slit diaphragm as described in Figure 2-1.

NEMA Standard 1-8-1992

2.3 IMAGING PROCEDURE

2.3.1 Alignment of the SLIT CAMERA and Radiographic Film

The REFERENCE AXIS shall form an angle, which is smaller than or equal to 0.009 radian (0.5 degrees), with both the symmetry axis of the slit diaphragm and the plane of the radiographic film. Complying with this tolerance is essential for an accurate measurement of EFFECTIVE FOCAL SPOT size using the SLIT CAMERA. If the measurement of the EFFECTIVE FOCAL SPOT size is difficult on the REFERENCE AXIS, see Section 6 for an alternative method.

NEMA Standard 1-8-1992

2.3.2 Orientation of the Slit Diaphragm

For the production of a pair of focal spot slit images, the slit diaphragm shall be oriented so that the length of the slit is normal within ± 0.009 radian (± 0.5 degrees) to each of the two evaluation directions, see Figure 2-2. This tolerance is necessary for an accurate measurement of EFFECTIVE FOCAL SPOT size using the SLIT CAMERA. This precision will be closely approximated if the slit diaphragm is oriented to result in the minimum image dimension.

NEMA Standard 1-8-1992

For measurements of the length of the EFFECTIVE FOCAL SPOT, the length evaluation direction shall be parallel to the longitudinal axis of the X-ray tube assembly or as specified by the manufacturer.

NEMA Standard 1-8-1992

A pinhole image of the focal spot is required to describe the width evaluation direction.

For measurements of the width of the EFFECTIVE FOCAL SPOT, the width evaluation direction is as specified in Figure 2-2.

NEMA Standard 1-8-1992

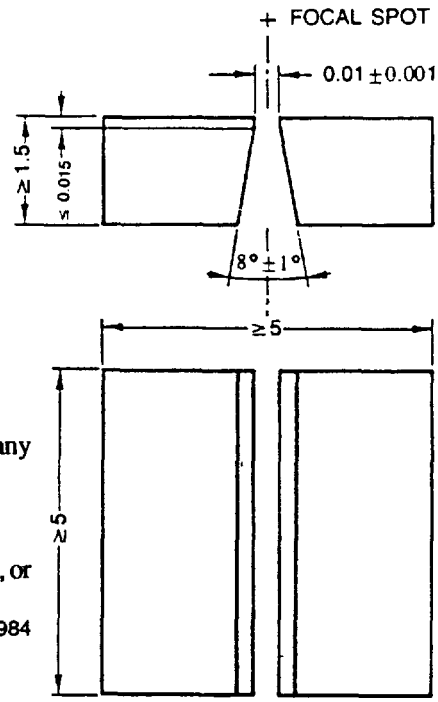

The slit diaphragm shall be made from any of the materials listed below:

- tungsten,
- tantalum,
- alloy of 90% gold and 10% platinum, or
- alloy of platinum and 10% iridium

NEMA Standard 11-15-1984

Figure 2-1
SLIT DIAPHRAGM

Copyright National Electrical Manufacturers Association
Provided by IHS under license with NEMA
No reproduction or networking permitted without license from IHS
Not for Resale

DIRECTION OVER THE WIDTH

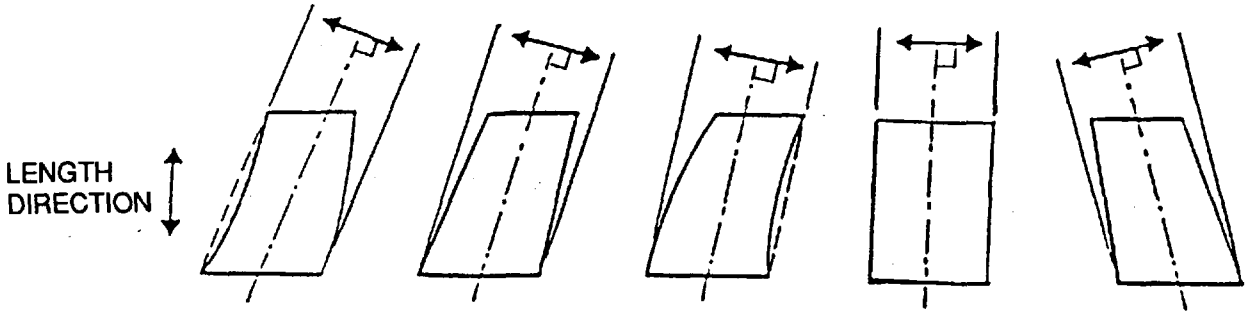

Figure 2-2
EVALUATION DIRECTIONS FOR FOCAL SPOTS

2.3.3 Imaging Geometry

The incident face of the slit diaphragm shall be placed normal to the REFERENCE AXIS at a distance from the ACTUAL FOCAL SPOT such that the variation of the enlargement ratio over the extension of the EFFECTIVE FOCAL SPOT does not exceed ± 5 percent in the REFERENCE AXIS (see Figure 2-3 and 2-4). This accuracy may be obtained more easily in the field at distances of 100 mm or greater.

NEMA Standard 1-8-1992

2.3.4 Enlargement Factor

The imaging geometry is described in Figures 2-4 and 2-5. The ENLARGEMENT FACTOR (E) is determined by the ratio of the distance from the diaphragm plane to the ACTUAL FOCAL SPOT mid-point (Z). The physical distance must be chosen per 2.3.3 using the technique described in 2.6.2.

The resulting enlarged image is a combination of the image of the enlarged focal spot plus a measurement contribution caused by the finite size of the slit diaphragm. The EFFECTIVE FOCAL SPOT size (F_{eff}) shall be calculated as follows:

$$F_{eff} = (I/E) - S\,(E+1)/E$$

where: F_{eff} = focal spot size
E = ENLARGEMENT FACTOR
S = slit size
I = total image size

Depending upon the size of the ACTUAL FOCAL SPOT and the ENLARGEMENT FACTOR (E), the slit measurement contribution will become a significant part of the total enlarged image (see Figure 2-3).

NEMA Standard 1-8-1992

2.4 PHOTOGRAPHIC TECHNIQUE

2.4.1 Type of Film

The film shall be any fine grain X-ray film designed for non-screen exposure.

NEMA Standard 1-8-1992

2.4.2 Development of the Film

The film shall be exposed and developed to a density that is 0.8 to 1.2 above the density of the non-exposed part of the film when measured in the most dense portion of the X-ray image. Fog density including the density of the base shall not exceed 0.2.

Density shall be controlled by means of the exposure time only.

NEMA Standard 1-8-1992

2.5 ELECTRICAL CONDITIONS

2.5.1 Working Conditions

Prior to obtaining measurements, the X-ray tube shall be inserted in the shockproof tube shield, or enclosure, for which it is designed or shall be operated under otherwise equivalent mounting conditions.

For rotating anode tubes, the stator shall be excited as it would for normal radiographic conditions.

NEMA Standard 1-8-1992

2.5.2 Exposure Factors

Exposures shall be made using a generator that produces either a three-phase full-wave rectified voltage waveform or a constant potential waveform (other waveforms will produce a variance in size). The focal spots shall be measured from a radiograph with test conditions given in Table 2-1. The time of exposure shall be chosen to give the film density specified in 2.4.2.

NEMA Standard 1-8-1992

Copyright National Electrical Manufacturers Association
Provided by IHS under license with NEMA
No reproduction or networking permitted without license from IHS
Not for Resale

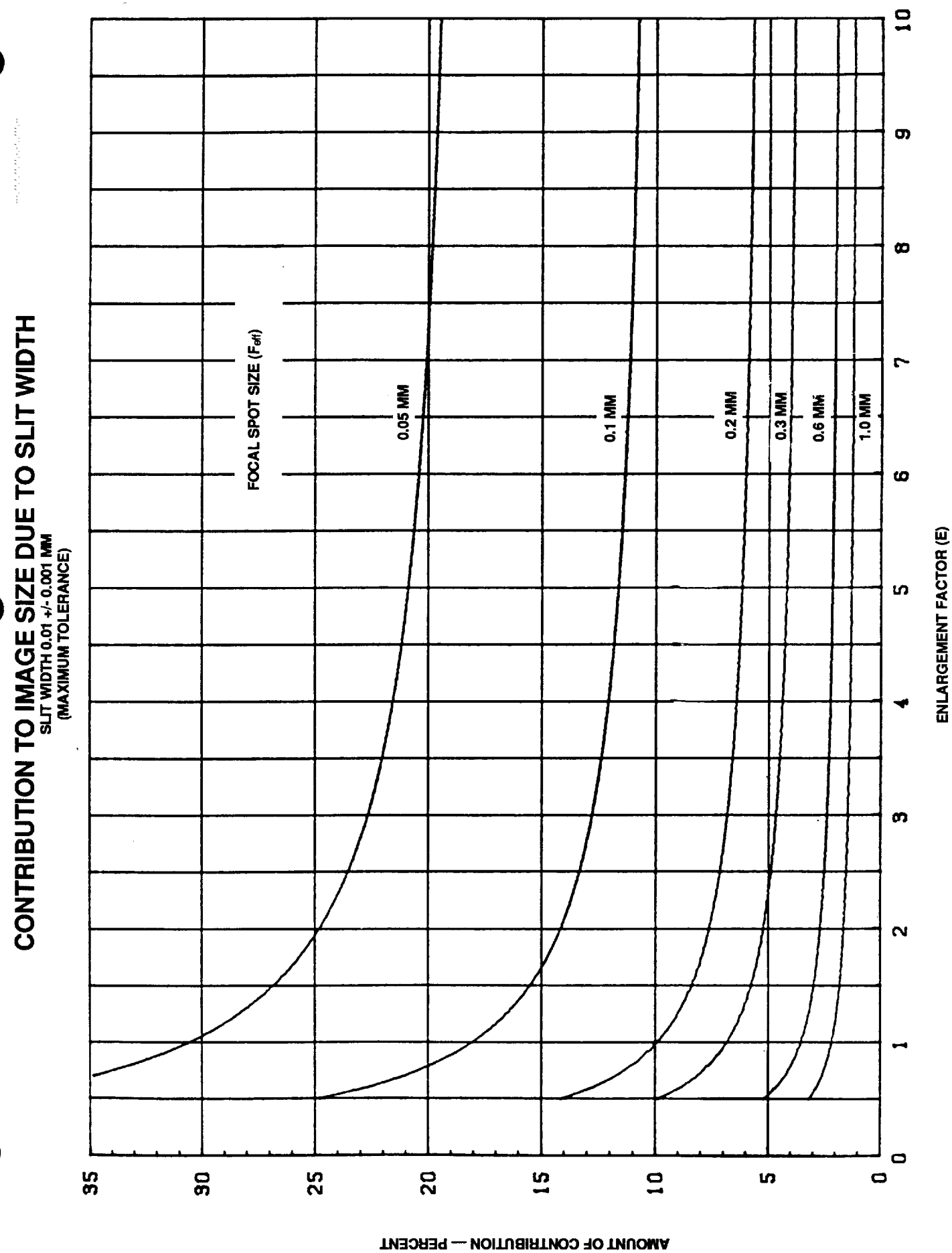

Figure 2-3

Copyright National Electrical Manufacturers Association
Provided by IHS under license with NEMA
No reproduction or networking permitted without license from IHS
Not for Resale

Table 2-1
TEST CONDITIONS

Maximum Anode - Cathode Voltage Rating (U)	Test Voltage	Test Anode Current
Mammographic units having U < 50 kV	30 kV	The maximum current rating allowed at the test voltage during a 1.0 second exposure at the highest rotational speed for which the anode is rated.
Rotating anode radiographic units having U ≤ 75 kV	Maximum rated voltage (U)	50 percent of the maximum current rating allowed at the test voltage during a 0.1 second exposure at the highest rotational speed for which the anode is rated.
Rotating anode radiographic units having 75 kV < U ≤ 150 kV	75 kV	50 percent of the maximum current rating allowed at the test voltage during a 0.1 second exposure at the highest rotational speed for which the anode is rated.
Rotating anode radiographic units having U > 150kV	50 percent of the maximum rated voltage (U)	50 percent of the maximum current rating allowed at the test voltage during a 0.1 second exposure at the highest rotational speed for which the anode is rated.
Stationary anode and other special application units designed for use over limited operating technique ranges	As stated by the manufacturer	As stated by the manufacturer.

2.6 MEASUREMENT OF X-RAY IMAGE

2.6.1 Lighting

The film shall be back lighted using a source having a luminance ranging between 1300 and 2600 candela per square meter.

NEMA Standard 1-8-1992

2.6.2 Measurement Procedure

The size of the focal spot image shall be examined by eye through a magnifying glass having a built-in graticule of 0.1 mm divisions and 5X to 10X magnification. The dimensions of the focal spot shall be determined from a pair of slit images.

Dimension L: Focal Spot Length
Dimension W: Focal Spot Width

The extent of the discernible image shall be measured over each focal spot slit image normal to the length of the slit at half of its length.

NEMA Standard 1-8-1992

2.6.3 Dimensions of the EFFECTIVE FOCAL SPOT (F_{eff})

The dimensions of the focal spot (F_{eff}) shall be obtained by applying the equation given in 2.3.4. The EFFECTIVE FOCAL SPOT size tolerance limits are shown in Table 2-2.

NEMA Standard 1-8-1992

2.7 STATEMENT OF COMPLIANCE

Should a manufacturer desire to state that a product is in compliance with this NEMA standards publication it shall be so indicated on the tube nameplate as shown in Figure 2-6. Any typical focal spot data provided to the user shall have been measured in accordance with this standard.

NEMA Standard 1-8-1992

Copyright National Electrical Manufacturers Association
Provided by IHS under license with NEMA
No reproduction or networking permitted without license from IHS
Not for Resale

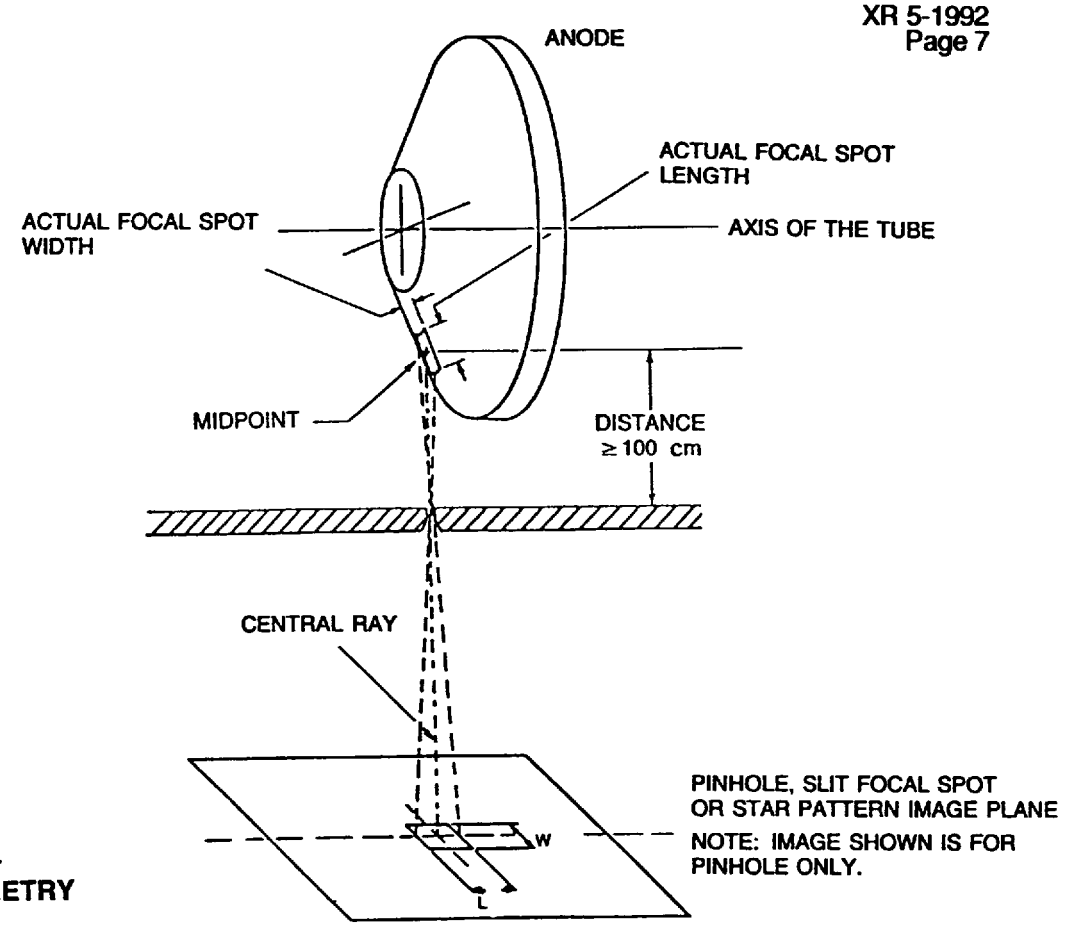

Figure 2-4
IMAGING GEOMETRY

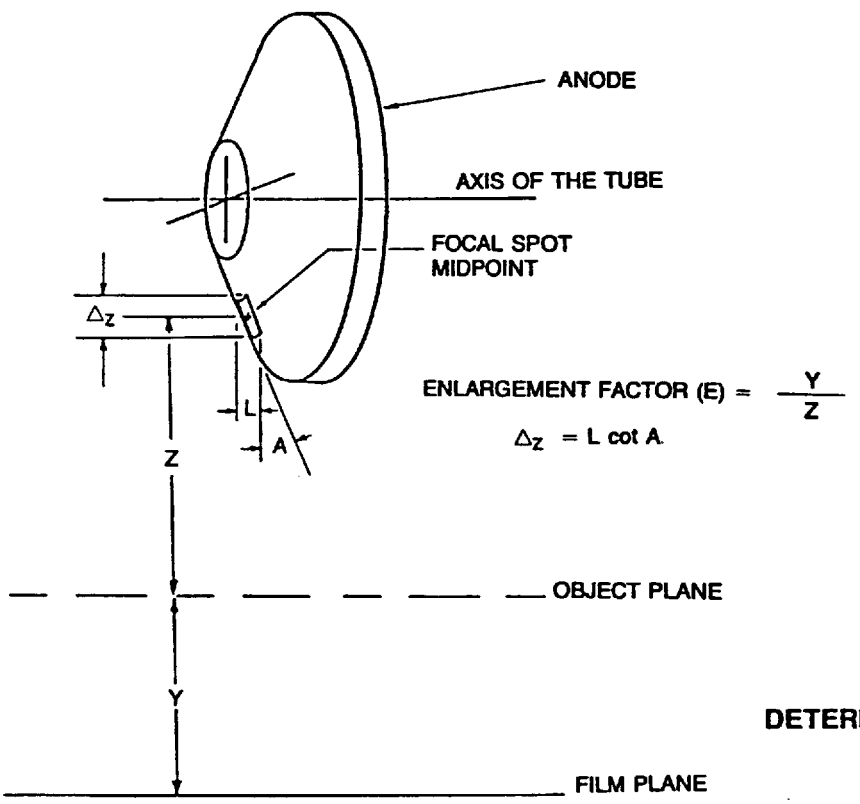

Figure 2-5
DETERMINATION OF ENLARGEMENT FACTOR (E)

NOTE: The upper and lower edges of the focal spot have different distances to the plane of the imaging camera as shown. The difference z can be calculated from the length "L" of the actual focal spot by $\Delta z = L \cot A$, where A is the anode angle. The resulting relative change of the enlargement factor (E) amounts to $\Delta z/Z$, where Z is the distance between focal spot midpoint and imaging camera. For example, it gives rise to a trapezoidal shaped pinhole camera image of a focal spot which in fact is rectangular.

Copyright National Electrical Manufacturers Association
Provided by IHS under license with NEMA
No reproduction or networking permitted without license from IHS
Not for Resale

Table 2-2
EFFECTIVE FOCAL SPOT SIZE TOLERANCE LIMITS
(FOR SLIT CAMERA METHOD)

NOMINAL FOCAL SPOT (F)	Maximum EFFECTIVE FOCAL SPOT Dimensions in mm (F_{eff})	
	Width	Length
0.05	0.075	0.075
0.1	0.15	0.15
0.15	0.23	0.23
0.2	0.30	0.30
0.25	0.40	0.40
0.3	0.45	0.65
0.4	0.60	0.85
0.5	0.75	1.1
0.6	0.90	1.3
0.7	1.1	1.5
0.8	1.2	1.6
0.9	1.3	1.8
1.0	1.4	2.0
1.1	1.5	2.2
1.2	1.7	2.4
1.3	1.8	2.6
1.4	1.9	2.8
1.5	2.0	3.0
1.6	2.1	3.1
1.7	2.2	3.2
1.8	2.3	3.3
1.9	2.4	3.5
2.0	2.6	3.7

NOTE: Maximum EFFECTIVE FOCAL SPOT dimensions for NOMINAL FOCAL SPOT designations not listed in the Table may be interpolated from the closest two values.

Nominal focal spot designation (F)	Complies with NEMA Standards Publication XR 5

Figure 2-6
TUBE NAMEPLATE

Copyright National Electrical Manufacturers Association
Provided by IHS under license with NEMA
No reproduction or networking permitted without license from IHS
Not for Resale

Section 3
FOCAL SPOT BLOOMING

3.1 GENERAL

The focal spot is often enlarged as current is increased and voltage is reduced. The BLOOMING measurement may be used to inform the user of the change in focal spot size when the tube is operated at full load rating. The rated power loading is a function of the size and intensity distribution of the focal spot, as well as of other parameters. Since BLOOMING characteristics vary by particular type and are influenced by application, no standard maximum or minimum limit can be given. This procedure is provided to standardize the test method only.

NEMA Standard 1-8-1992

3.2 EXPOSURE FACTORS

Exposures shall be made using a generator that produces either a three-phase full-wave rectified voltage waveform or a constant potential waveform (other waveforms will produce a size variation). The focal spots shall be measured from a radiograph with test conditions given in Table 3-1. The time of exposure shall be chosen to give the film the density specified in 2.4.2.

NEMA Standard 1-8-1992

3.3 MEASUREMENT OF X-RAY IMAGE

3.3.1 Lighting

The film shall be back-lighted using a source having a luminance ranging between 1300 and 2600 candela per square meter.

NEMA Standard 1-8-1992

3.3.2 Measurement Procedure

The size of focal spot image shall be examined by eye through a magnifying glass having a built-in graticule of 0.1 mm divisions and 5X to 10X magnification. The dimensions of the focal spot shall be determined from a pair of slit images.

Dimension L: Focal spot length
Dimension W: Focal spot width

The extent of the discernible image shall be measured over each focal spot slit image normal to the length of the slit at half of its length.

NEMA Standard 1-8-1992

Copyright National Electrical Manufacturers Association
Provided by IHS under license with NEMA
No reproduction or networking permitted without license from IHS
Not for Resale

Table 3-1
TEST CONDITIONS

Maximum Anode - Cathode Voltage Rating (U)	Test Voltage	Test Anode Current
Mammographic units having U < 50 kV	30 kV	100 percent of the maximum current rating allowed at the test voltage during a 1.0 second exposure at the highest rotational speed for which the anode is rated.
Rotating anode radiographic units having U ≤ 75 kV	Maximum rated voltage (U)	100 percent of the maximum current rating allowed at the test voltage during a 0.1 second exposure at the highest rotational speed for which the anode is rated.
Rotating anode radiographic units having 75 kV < U ≤ 150 kV	75 kV	100 percent of the maximum current rating allowed at the test voltage during a 0.1 second exposure at the highest rotational speed for which the anode is rated.
Rotating anode radiographic units having U > 150 kV	50 percent of the maximum rated voltage (U)	100 percent of the maximum current rating allowed at the test voltage during a 0.1 second exposure at the highest rotational speed for which the anode is rated.
Stationary anode and other special application units designed for use over limited operating technique ranges	As stated by the manufacturer	As stated by the manufacturer.

Copyright National Electrical Manufacturers Association
Provided by IHS under license with NEMA
No reproduction or networking permitted without license from IHS
Not for Resale

Section 4
RESOLUTION CAMERA (STAR PATTERN) METHOD OF EVALUATION

4.1 BASIC METHOD

An image of a test pattern shall be produced on a fine grain non-screen X-ray film. The FOCAL SPOT RESOLUTION shall be determined from the measurements of the test pattern image at a stated MAGNIFICATION FACTOR (M).

NEMA Standard 1-8-1992

4.2 STAR PATTERN CAMERA

Focal spot star radiographs shall be obtained by means of a star pattern camera containing a test pattern, which consists of an array of alternating high absorbing and low absorbing wedges. The high absorbing wedges shall be made of lead or an equivalent material and shall have a thickness of 0.03 to 0.05 mm.

All wedges shall have a vertex angle — equal to or less than 0.035 radian (approximately 2 degrees).

The active area of the test pattern shall include a minimum of four equally spaced sectors and shall have a diameter of at least 45 mm.

The essential dimensions of the test pattern and its basic structure shall be as shown in Figure 4-1.

NEMA Standard 1-8-1992

4.3 RADIOGRAPHIC FILM

Focal spot star radiographs shall be made on any fine grain radiographic film designed for non-screen use.

NEMA Standard 1-8-1992

4.3.1 Alignment of the Star Pattern Camera and Radiographic Film

The REFERENCE AXIS shall form an angle, which is smaller than or equal to 0.009 radian (0.5°), with the axis of the test pattern and the plane of the radiographic film (see Figure 4-2). The active area of the test pattern must be oriented so that the dimensions (D_w and D_l) obtained are maximized (see Figure 4-3).

NEMA Standard 1-8-1992

4.3.2 Selection of Magnification M

The test magnification shall be selected so that the first disappearing frequency shall fall within the image of the test pattern.

The test pattern and the film shall be placed at distances from the ACTUAL FOCAL SPOT allowing a magnification M such that the dimensions D_w and D_l will be as near as practicable to one-half the diameter of the image of the test pattern.

NEMA Standard 1-8-1992

In general, magnification may be approximated by the equation:

$M \approx 1 + \theta/2F$

where F = NOMINAL FOCAL SPOT

θ = star wedge angle in degrees

4.4 PHOTOGRAPHIC TECHNIQUE

4.4.1 Development of Film

The procedure specified in 2.4.2 shall be followed.

NEMA Standard 1-8-1992

4.4.2 Lighting

The procedure specified in 2.6.1 shall be followed.

NEMA Standard 1-8-1992

4.5 ELECTRICAL CONDITIONS

4.5.1 Working Conditions

The working conditions specified in 2.5.1 shall be used.

NEMA Standard 1-8-1992

4.5.2 Exposure Factors

The exposure factors specified in 2.5.2 shall be used.

NEMA Standard 1-8-1992

4.6 DETERMINATION OF FOCAL SPOT RESOLUTION (R)

The FOCAL SPOT RESOLUTION (R) is a function of the mean dimensions, D_w and D_l, the MAGNIFICATION FACTOR (M) and the vertex angle, θ (in radians) of the star pattern and shall be calculated as follows:

$$R_{(W,L)}(1p/mm) = \frac{M}{D_{(W,L)}\theta}$$

Where:

M = MAGNIFICATION FACTOR (M may also be determined from the ratio of the distance between reference points on the film to the distance between reference points on the test pattern).

D_w and D_l = the largest diameters where the repetitive pattern can no longer be differentiated from the diffused background (diameter where the repetitive pattern disappears or reverses) and shall be measured in the direction shown in Figure 4-3. D_w and D_l shall be measured in millimeters.

$R_{(W,L)}$ = limit of resolving power in line pairs/millimeter.

θ = the vertex angle of the wedges in radians

View the image of the star pattern with the unaided eye or a low magnification, observing each quadrant (sets of radial lines) individually. In each quadrant, determine the outermost "disappearance frequency" (area of non-resolu-

Copyright National Electrical Manufacturers Association
Provided by IHS under license with NEMA
No reproduction or networking permitted without license from IHS
Not for Resale

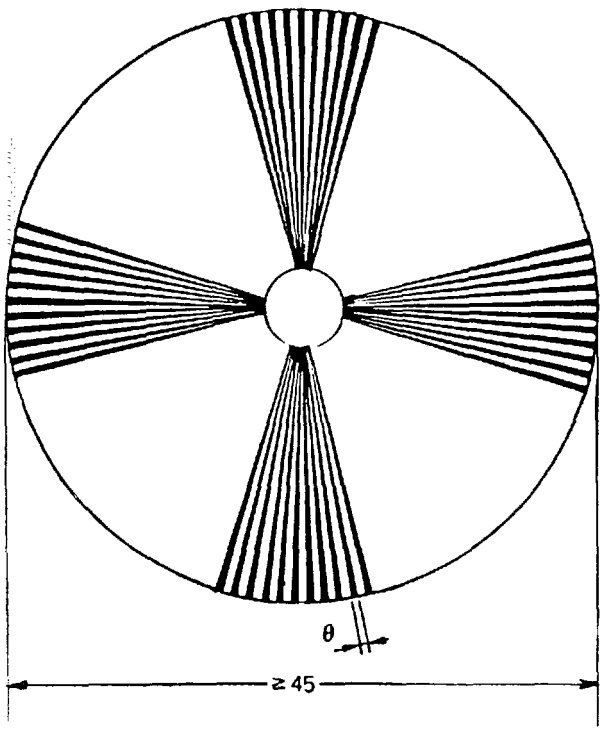

Figure 4-1
ESSENTIAL DIMENSION OF THE TEST PATTERN

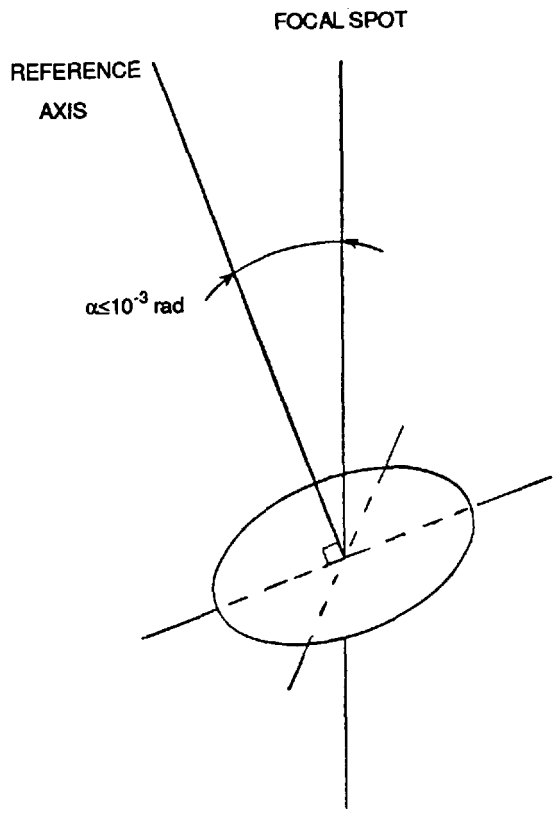

Figure 4-2
ALIGNMENT OF THE STAR PATTERN CAMERA

tion). The zones of blurred resolution may take several forms of appearance as described in the sketches in Figure 4-3.

In each quadrant, mark the midpoint of the blurred resolution zone at its outer most excursion on each wedge. Use an eye loupe magnifier where necessary. There are some focal spot density distributions such as Gaussian which will not show a disappearance frequency on a star pattern camera image.

Copyright National Electrical Manufacturers Association
Provided by IHS under license with NEMA
No reproduction or networking permitted without license from IHS
Not for Resale

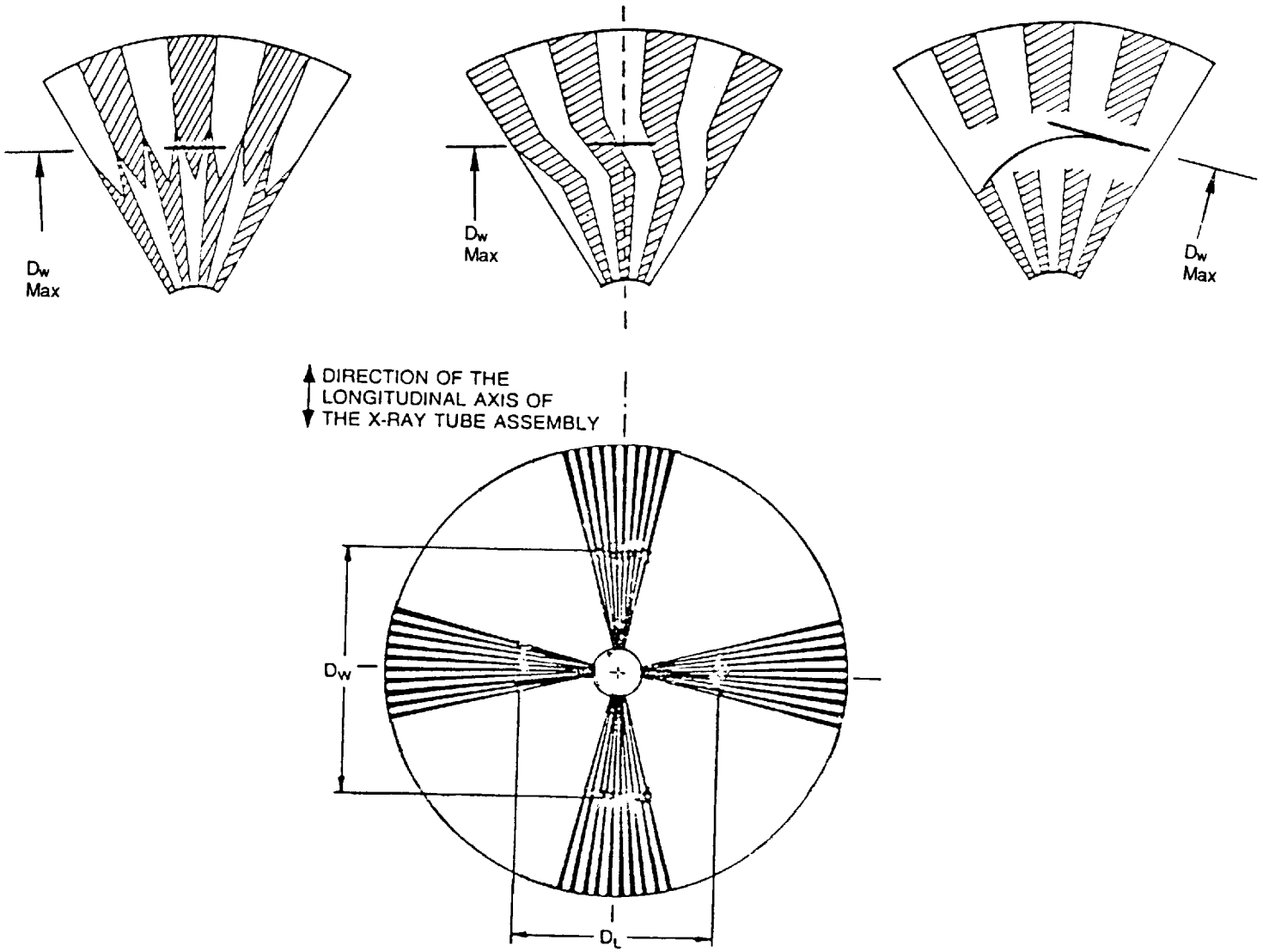

Figure 4-3
IMAGE OF THE TEST PATTERN

Copyright National Electrical Manufacturers Association
Provided by IHS under license with NEMA
No reproduction or networking permitted without license from IHS
Not for Resale

--`,,,`,,`-`-`,,`,,`,`,,`---

Copyright National Electrical Manufacturers Association
Provided by IHS under license with NEMA
No reproduction or networking permitted without license from IHS

Not for Resale

Section 5
PINHOLE CAMERA METHOD OF EVALUATION

5.1 INTRODUCTION

The assembly of equipment, including a pinhole diaphragm, is used for determining the overall shape, orientation, intensity distribution, and relative location of focal spots. The image can be used to align the SLIT CAMERA, star pattern and determine point-to-point focal spot dimensions.

NEMA Standard 1-8-1992

5.2 BASIC METHOD

A X-ray image of the ACTUAL FOCAL SPOT shall be produced by means of a PINHOLE CAMERA. The pinhole diaphragm and film shall be positioned on the REFERENCE AXIS.

NEMA Standard 1-8-1992

5.3 PINHOLE CAMERA

5.3.1 Pinhole Diaphragm Construction

The pinhole diaphragm shall be made from one of the following:

1. An alloy of 90 percent gold and 10 percent platinum; or
2. Tungsten; or
3. Tungsten-carbide; or
4. Tungsten alloy; or
5. 90 percent platinum and 10 percent iridium alloy; or
6. Tantalum.

The dimensions of the pinhole diaphragm shall be in accordance with Table 5-1 and Figure 5-1.

NEMA Standard 1-8-1992

5.3.2 Distance and Alignment of ACTUAL FOCAL SPOT and Pinhole Diaphragms (See Figure 2-5)

The ACTUAL FOCAL SPOT midpoint, pinhole, and film shall be on the REFERENCE AXIS within ± 1/2 degree and spaced to obtain the nominal enlargement stated in Table 5-2.

NEMA Standard 1-8-1992

5.4 PHOTOGRAPHIC TECHNIQUES

5.4.1 Type of Film

The film specified in 2.4.1 shall be used.

NEMA Standard 1-8-1992

5.4.2 Development of the Film

The procedure specified in 2.4.2 shall be followed.

NEMA Standard 1-8-1992

5.5 ELECTRICAL CONDITIONS

5.5.1 Working Conditions

The working conditions specified in 2.5.1 shall be used.

NEMA Standard 1-8-1992

5.5.2 Exposure Factors

The exposure factors specified in 2.5.2 shall be used.

NEMA Standard 1-8-1992

5.6 METHOD OF OBSERVATION

5.6.1 Lighting

Procedure specified in 2.6.1 shall be followed.

Copyright National Electrical Manufacturers Association
Provided by IHS under license with NEMA
No reproduction or networking permitted without license from IHS
Not for Resale

Table 5-1
PINHOLE DIAPHRAGM DIMENSIONS

Nominal Focal Spot (F)	Diameter D mm	Length L mm
$F \leq 1.2$	0.030 ± 0.005	0.075 ± 0.010
$1.2 < F \leq 2.5$	0.075 ± 0.005	0.350 ± 0.010
$2.5 < F$	0.100 ± 0.005	0.500 ± 0.010

Table 5-2
ENLARGEMENT FACTOR (E)

Nominal Focal Spot (F)	Enlargement Factor (E)
$F \leq 0.3$	4
$0.3 < F < 2.5$	2
$2.5 < F$	1

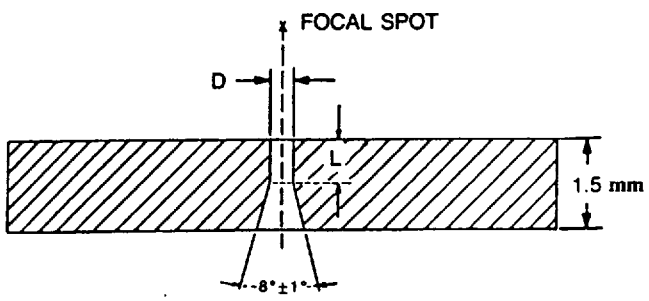

Figure 5-1
CROSS-SECTION OF PINHOLE DIAPHRAGM

Copyright National Electrical Manufacturers Association
Provided by IHS under license with NEMA
No reproduction or networking permitted without license from IHS
Not for Resale

Section 6
MEASUREMENT CORRELATION

6.1 INTRODUCTION

If measurement of the EFFECTIVE FOCAL SPOT size on the REFERENCE AXIS is difficult due to system constraints, the measurement can be performed in another direction. For example, the measurement can be made on an axis passing through the ACTUAL FOCAL SPOT perpendicular to the image plane. This method cannot be used for correlating focal spot resolution measurements.

NEMA Standard 1-8-1992

6.2 BASIC METHOD

The measurement of the EFFECTIVE FOCAL SPOT size on an axis other than the REFERENCE AXIS can be accomplished using the equation and the geometry of Figure 6-1.

NEMA Standard 1-8-1992

6.3 APPLICABLE DIMENSIONS

The equation and geometry of Figure 6-1 apply only to the length dimension; the width dimension is not affected by this technique (see Figure 6-2).

NEMA Standard 1-8-1992

Copyright National Electrical Manufacturers Association
Provided by IHS under license with NEMA
No reproduction or networking permitted without license from IHS
Not for Resale

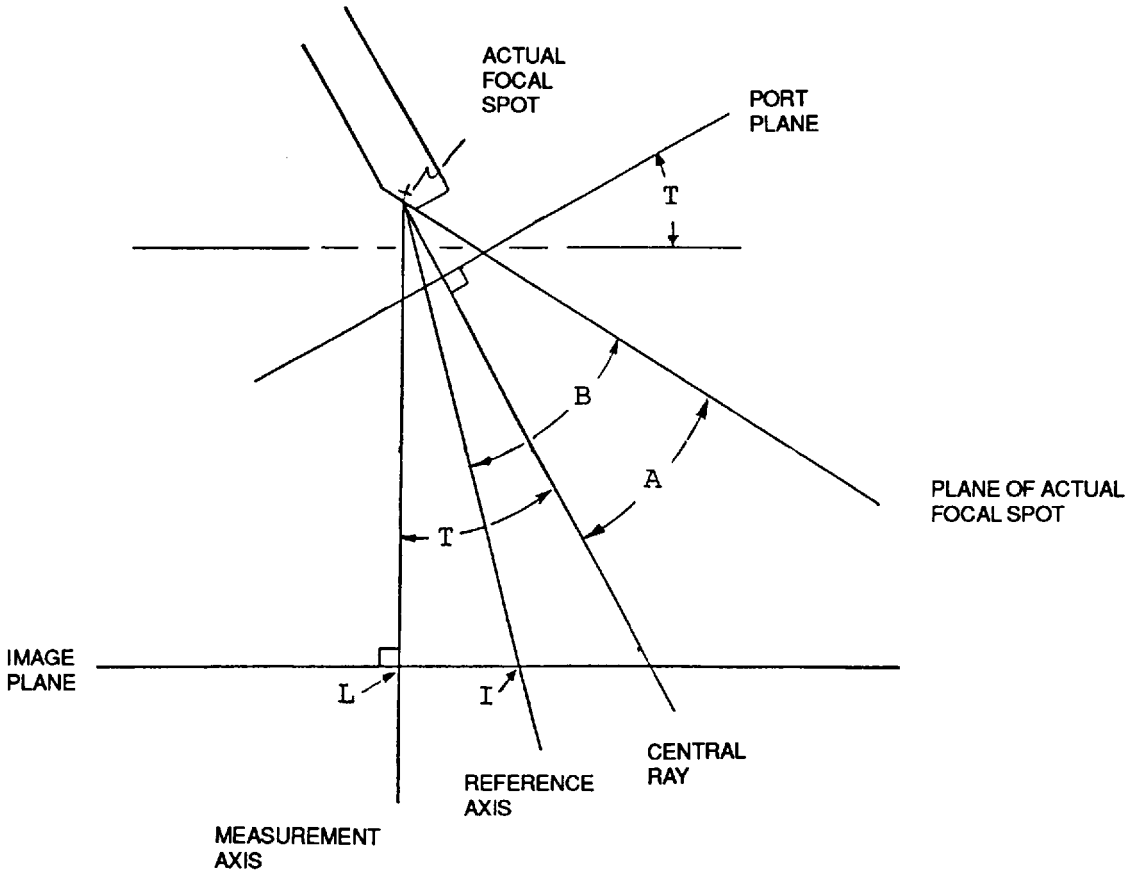

$$F_{eff} = \frac{I}{E} - S\frac{(E+1)}{E}$$ (See 2.3.4 and Table 2-2)

$$I = \frac{L \sin B}{\sin (T + A)}$$ (Total image size on reference axis, see Figure 6-2)

L = focal spot length measurement
A = TARGET ANGLE - supplied by X-ray tube manufacturer
B = REFERENCE AXIS ANGLE - supplied by X-ray tube manufacturer
T = tube assembly tilt angle - supplied by X-ray system manufacturer

Figure 6-1
CORRELATION GEOMETRY FOR EFFECTIVE FOCAL SPOT LENGTH DETERMINATION

Copyright National Electrical Manufacturers Association
Provided by IHS under license with NEMA
No reproduction or networking permitted without license from IHS
Not for Resale

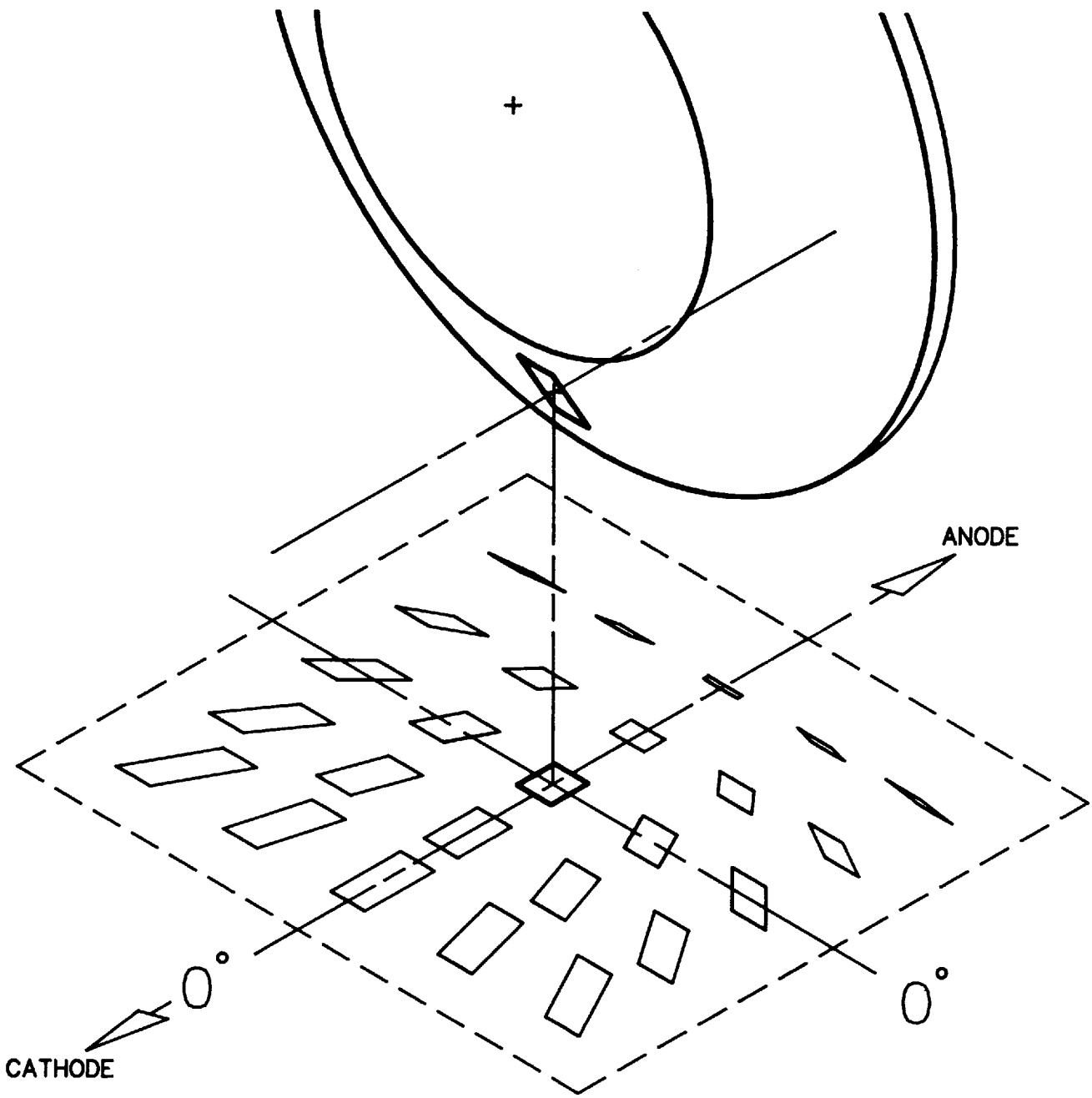

NOTE: In connection with the free choice of the specified REFERENCE AXIS it is important to recognize that the shape and dimensions of the focal spot over the RADIATION FIELD depend strongly on the direction of the projection of the focal spot.

Figure 6-2
PROJECTION OF THE ACTUAL FOCAL SPOT OVER THE RADIATION FIELD

Copyright National Electrical Manufacturers Association
Provided by IHS under license with NEMA
No reproduction or networking permitted without license from IHS
Not for Resale

Copyright National Electrical Manufacturers Association
Provided by IHS under license with NEMA
No reproduction or networking permitted without license from IHS

Not for Resale

Section 7
DETERMINATION OF THE MODULATION TRANSFER FUNCTION (MTF) OF THE FOCAL SPOT

7.1 GENERAL

The MODULATION TRANSFER FUNCTION (MTF) can be calculated from the slit image using a microdensitometer scan. The MTF can be utilized in optimizing system performance.

7.1.1 Basic Method

The one-dimensional focal spot intensity distribution, or line spread function in a specified direction, is the X-ray intensity distribution integrated over the total extension of the focal spot in a direction perpendicular to the specified direction. The one-dimensional intensity distribution as obtained from the slit exposures shall be used to develop the MTF Curves.

NEMA Standard 1-8-1992

7.1.2 Measuring Arrangement

The focal spot slit images shall be scanned by means of a microdensitometer. The slit of the microdensitometer shall have a real width not exceeding the width of the slit diaphragm used for the production of the images.

The length of the slit of the microdensitometer shall be limited so that it can be aligned to the direction of the diaphragm slit projected on the image in order that the effective width of the microdensitometer slit, normal to the direction of the projected diaphragm slit, will be smaller than twice the real width of the microdensitometer slit as shown in Figure 7-1.

The scanning direction shall be aligned normal to the direction of the diaphragm slit to within ± 1 degree.

NEMA Standard 1-8-1992

7.2 MEASUREMENT

7.2.1 Measurement of the Density Distribution

The density over each focal spot slit image shall be scanned continuously normal to its longitudinal direction at half of its length.

The results of this measurement shall be presented as a curve showing density over the width of the image.

NEMA Standard 1-8-1992

7.2.2 Corrections to be Applied

The sensitometric curve shall be established during an identical radiographic film processed under the same conditions as that used for the focal spot slit radiogram.

To limit the input data for the calculation procedure of the MODULATION TRANSFER FUNCTIONS, the flanks of the curve of linear distribution of radiant intensity shall be reduced by linear extrapolation of the values at 15 percent and 5 percent of the maximum intensity as shown in Figure 7-2.

NEMA Standard 1-8-1992

7.3 CALCULATION OF THE MODULATION TRANSFER FUNCTION

7.3.1 Basic Calculation

The one-dimensional MODULATION TRANSFER FUNCTION of the geometry of a focal spot shall be calculated by means of the Fourier transform. The input values for carrying out the Fourier transform shall be the values of the linear distribution of radiation exposure over the focal spot slit radiograph, the abscissae in Figure 7-2, divided by the ENLARGEMENT FACTOR used for the production of the focal spot slit radiograph and the corresponding values of radiation exposure, the ordinates in Figure 7-2.

The choice of ENLARGEMENT FACTOR and the mesh of ordinates along the axis of the abscissae shall be selected so that the extent and the structures of the linear distribution of radiation exposure over the focal spot will be taken into account and a further refinement of the mesh would not result in a significant change of the calculated MODULATION TRANSFER FUNCTION.

NEMA Standard 1-8-1992

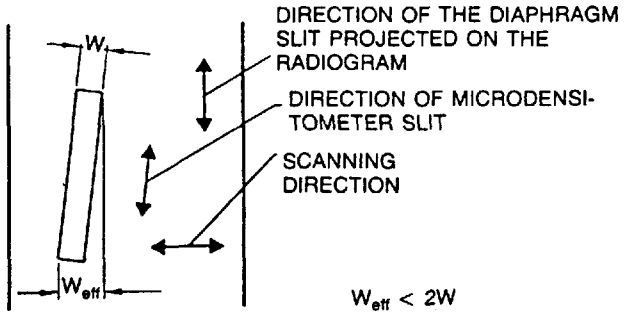

Figure 7-1
MICRODENSITOMETER SCAN

Copyright National Electrical Manufacturers Association
Provided by IHS under license with NEMA
No reproduction or networking permitted without license from IHS
Not for Resale

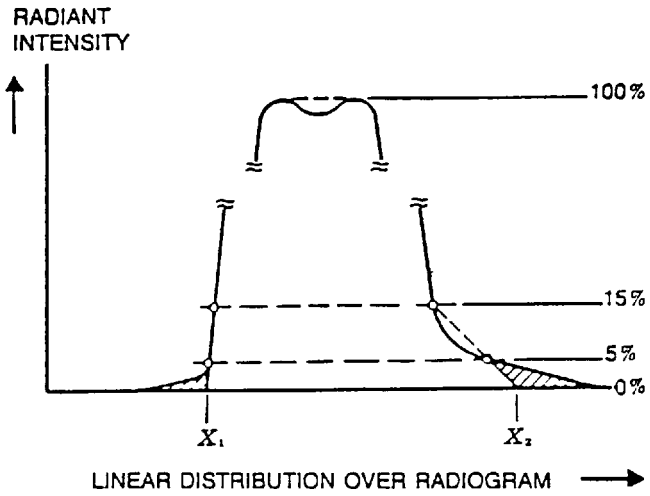

Figure 7-2
LIMITATION OF INPUT DATA

7.3.2 Presentation of MTF

The values of spatial frequency obtained according to 7.3.1 shall be transformed for the purpose of presentation according to the formula:

$$f_s = f_i \frac{M_s}{M_s - 1}$$

Where:

f_s is the spatial frequency for the standard magnification given in Table 7-1.
f_i the spatial frequency obtained according to 7.3.1.
M_s the standard magnification.

NEMA Standard 1-8-1992

Table 7-1
STANDARD MAGNIFICATION FACTOR FOR MODULATION TRANSFER FUNCTIONS

Nominal Focal Spot (F)	Standard Magnification (M_s)
$F < 0.6$	2
$0.6 \leq F$	1.3

NOTE: The MODULATION TRANSFER FUNCTION of a subject focal spot shall be given for the standard magnification (see Table 7-1) as a function of spatial frequencies in line pairs per millimeter (LP/mm) in a linear scale for both axes of coordinates such that for the spatial frequency zero the value of the MTF becomes unity (100 percent). The MTF curve shall extend at least down to its 10 percent value. The MTF's of width and length of the focal spot shall be presented graphically with the nominal focal spot value.

7.3.3 Application of MTF

For the application of the MODULATION TRANSFER FUNCTION under practical radiological conditions, the values obtained or those given according to 7.3.1 may be transformed according to the formula:

$$f_p = f_s \left(\frac{M_s - 1}{M_s}\right) \left(\frac{M_p}{M_p - 1}\right)$$

Where:

f_p is the spatial frequency for the desired magnification.
f_s the spatial frequency for the standard magnification.
M_s the standard magnification.
M_p the desired magnification.

Authorized Engineering Information 1-8-1992

Copyright National Electrical Manufacturers Association
Provided by IHS under license with NEMA
No reproduction or networking permitted without license from IHS
Not for Resale

NEMA STANDARDIZATION

The purpose of NEMA Standards, their classification and status are set forth in certain clauses of the NEMA *Standardization Policies and Procedures* manual and are referenced below:

Purpose of Standards

National Electrical Manufacturers Association Standards are adopted in the public interest and are designed to eliminate misunderstandings between the manufacturer and the purchaser and to assist the purchaser in selecting and obtaining the proper product for their particular needs. Existence of a National Electrical Manufacturers Association Standard does not in any respect preclude any member or nonmember from manufacturing or selling products not conforming to the standard.

(Standardization Policies and Procedures, p. 1)

Definition of a Standard

A standard of the National Electrical Manufacturers Association defines a product, process or procedure with reference to one or more of the following: nomenclature, composition, construction, dimensions, tolerances, safety, operating characteristics, performance, rating, testing, and the service for which they are designed.

(Standardization Policies and Procedures, p. 2)

Dimensions

Where dimensions are given for interchangeability purposes, alternate dimensions satisfying the other provisions of the Standards Publication may be capable of otherwise equivalent performance.

(Standardization Policies and Procedures, p. 8)

Categories of Standards

National Electrical Manufacturers Association Standards are of three classes:

1. NEMA Standard, which relates to a product, process or procedure commercially standardized and subject to repetitive manufacture, which standard has been approved by at least 90 percent of the members of the Subdivision eligible to vote thereon;
2. Suggested Standard for Future Design, which may not have been regularly applied to a commercial product, but which suggests a sound engineering approach to future development, which standard has been approved by at least two-thirds of the members of the Subdivision eligible to vote thereon.
3. Adoptive Standard, which is adopted in whole or in part from the standards of another organization, either domestic, regional, or international.

(Standardization Policies and Procedures, pp 7 & 16)

Authorized Engineering Information

Authorized Engineering Information consists of explanatory data and other engineering information of an informative character not falling within the classification of NEMA Standard or Suggested Standard for Future Design, which standard has been approved by at least two-thirds of the members of the Subdivision eligible to vote on the standard.

(Standardization Policies and Procedures, pp. 7 & 16)

Official Standards Proposal

An Official Standards Proposal is an official draft of a proposed standard which is formally recommended to an outside organization(s) for consideration, comment and/or approval, and which has been approved by at least 90 percent of the members of the Subdivision eligible to vote thereon. *(Standardization Policies and Procedures, pp 7 & 16)*

Identification of Status

Standards in NEMA Standards Publications are identified in the foreword or following each standard as "NEMA Standard" or "Suggested Standard for Future Design." These indicate the status of the standard. These words are followed by a date which indicates when the standard was adopted in its present form by the Association.

The material identified as "Authorized Engineering Information" and "Official Standards Proposal" is designated similarly.

July 17, 1990

Copyright National Electrical Manufacturers Association
Provided by IHS under license with NEMA
No reproduction or networking permitted without license from IHS
Not for Resale

X-RAY IMAGING PRODUCTS SECTION
OF THE
NATIONAL ELECTRICAL MANUFACTURERS ASSOCIATION

MEMBER COMPANIES

Acoma Medical Imaging, Inc.
Wheeling, IL 60090

ADAC Laboratories
Milpitas, CA 95035-7443

Advanced Instrument
Development, Inc.
Melrose Park, IL 60160

Belmont Equipment Corporation
Somerset, NJ 08873

Bennett X-Ray Corporation
Copiague, NY 11726

Camtronics Ltd. Medical Systems
Hartland, WI 53029

Capintec, Inc.
Pittsburgh, PA 15238

Comet North America
Norwalk, CT 06850

Continental X-Ray Corporation
Broadview, IL 60153

Dornier Medical Systems, Inc.
Marietta, GA 30144

Eastman Kodak Company
Rochester, NY 14653-9105

Eigen
Nevada City, CA 95959

Varian Power Grid & X-Ray
Tube Products
Salt Lake City, UT 84104

Elema-Schonander, Inc.
Schaumburg, IL 60173-3887

Elscint, Inc.
Hackensack, NJ 07601

Eureka X-Ray Tube, Inc.
Arlington Heights, IL 60004-1818

Fischer Imaging Corporation
Denver, CO 80241

Gammex, Inc.
Milwaukee, WI 53226-0708

GE Medical Systems
Milwaukee, WI 53201

Hewlett-Packard Company
McMinnville, OR 97128

Instrumentarium Imaging, Inc.
Milwaukee, WI 53207

Liebel-Flarsheim Company
Cincinnati, OH 45215-6305

J. Morita Corporation
Torrance, CA 90505

Nuclear Associates
Carle Place, NY 11514

Oldelft Corporation of America
Fairfax, VA 22031

Parker Medical, Inc.
New Milford, CT 06776

Philips Medical Systems,
North America Company
Shelton, CT 06484

Picker International, Inc.
Highland Heights, OH 44143

Siemens Medical Systems, Inc.
Iselin, NJ 08830

Thomson Components & Tubes
Corporation
Totowa, NJ 07511

3M Imaging Systems Division
St. Paul, MN 55144

Toshiba America Medical
Systems Inc.
Tustin, CA 92680-2068

Universal
Chicago, IL 60651

XRE Corporation
Littleton, MA 01460

Copyright National Electrical Manufacturers Association
Provided by IHS under license with NEMA
No reproduction or networking permitted without license from IHS
Not for Resale