**NEMA Standards Publication No. XR 16-1991 (R1996)**

*Test Standard for the Determination of the System Contrast Ratio and the System Veiling Glare Index of an X-Ray Image Intensifier System*

*Published by:*

**National Electrical Manufacturers Association**
1300 North 17th Street, Suite 1847
Rosslyn, VA 22209

© Copyright 2001 by the National Electrical Manufacturers Association. All rights including translation into other languages reserved under the Universal Copyright Convention, the Berne Convention for the Protection of Literary and Artistic Works, and the International and Pan American Copyright Conventions.

Copyright National Electrical Manufacturers Association
Provided by IHS under license with NEMA
No reproduction or networking permitted without license from IHS
Not for Resale

# TABLE OF CONTENTS


| | | Page |
|---|---|---|
| | FOREWORD | ii |
| | INTRODUCTION | iii |
| | SCOPE | iii |
| **Section 1** | REFERENCED STANDARDS AND TERMINOLOGY | |
| | Referenced Standards | 1 |
| | Degrees of Requirements | 1 |
| | Definitions | 1 |
| **Section 2** | TEST EQUIPMENT | |
| | Contrast Ratio Test Objects | 3 |
| | Image Position Calibration Template | 3 |
| | Densitometer | 3 |
| | Photometer | 3 |
| | X-ray Fluence and Fluence Rate Monitor | 4 |
| **Section 3** | STANDARD SYSTEM TEST CONDITIONS | |
| | General Requirements | 5 |
| | Source to Entrance Plane Distance (SED) | 5 |
| | Radiation Requirements | 6 |
| | Anti-Scatter Grid | 6 |
| | Position of the Contrast Ratio Test Object | 6 |
| | Position of the X-ray Fluence or Fluence Rate Monitor | 6 |
| **Section 4** | DETERMINATION | |
| | Measurement Procedures | 7 |
| | Presentation of Results | 8 |
| **Section 5** | STATEMENT OF COMPLIANCE | |
| | Statement | 9 |
| **Appendix** | DETERMINATION OF A CORRECTION FOR PHOTOMETER VEILING GLARE | 11 |
| **Figures** | Figure 2-1 Image Position Calibration Template | 3 |
| | Figure 3-1 Equipment Setups for the Determination | 5 |




Copyright National Electrical Manufacturers Association
Provided by IHS under license with NEMA
No reproduction or networking permitted without license from IHS
Not for Resale

## Foreword

This NEMA Standards Publication is one of a series of test standards developed by the X-ray Imaging Products Section and the medical diagnostic imaging industry for the measurement of performance characteristics governing the image quality of X-ray image intensifier (XRII) systems. These test standards are intended for the use of equipment manufacturers, prospective purchasers, and users alike. Manufacturers may find these standards useful in establishing standard test conditions for the determination of system performance specifications. Prospective equipment purchasers may benefit from these standards as the employment of standard test conditions and methods enables meaningful comparisons to be made of NEMA-referenced, competitive, equipment performance specifications. Users may also benefit from these standards through a better appreciation of the performance of XRII systems.

Characterizing the parameters that govern image quality is a non-trivial task. The assessment of image quality lies in eye of the beholder and so is a somewhat subjective measure influenced by the spatial, temporal, contrast, and noise characteristics of the image. Historically, many techniques have been developed employing varying degrees of sophistication to establish subjective and objective measures of these parameters, and the following non-exhaustive list of parameters can be considered as relevant to image quality:

Contrast Ratio
Detective Quantum Efficiency (DQE)
Fixed Pattern Noise
Gain
Image Signal Uniformity
Lag
Limiting Spatial Resolution
Modulation Transfer Function (MTF)
Noise Power Spectrum
Radial Image Distortion
Signal to Noise Ratio
Visible Entrance Field Size

These parameters are not all independent and some of them may partially overlap in assessing the image quality. Moreover, it must be recognized that not all of these parameters lend themselves to measurement at the installation site. Some parameters require instrumentation better suited to factory measurements while others require the facilities of an instrumentation laboratory to assure the stable test conditions necessary for reliable measurements. The NEMA X-ray Image Intensifier Systems Subcommittee intends to make a selection from the above-mentioned list of parameters where practical and technically feasible measurements can be made at the system level and to prepare a set of NEMA standards.

This publication has been prepared by the X-ray Imaging Products Section of NEMA which periodically reviews it for any revisions necessary to keep it up to date with advancing technology. Comments or proposed revisions are welcomed and should be submitted to:

Vice-President, Engineering Department
National Electrical Manufacturers Association
2101 L Street, N.W., Suite 300
Washington, D.C. 20037



Copyright National Electrical Manufacturers Association
Provided by IHS under license with NEMA
No reproduction or networking permitted without license from IHS
Not for Resale

## Introduction

The system contrast ratio (SCR) and the system veiling glare index (SVGI) are measures of the spatial frequency response of an imaging system at low frequencies and, as such, complement the limiting spatial resolution, which is a measure of the system's high frequency response. The contrast represented by the difference in X-ray fluence between an object and its surround can be reduced by most of the elements of the imaging chain. Generally, this loss of contrast is due to scattering of the image-carrying quanta away from ideal, geometric paths. The luminance of the displayed image due to imaging the scattered quanta is called "veiling glare." Processes that contribute to veiling glare include, for example, the scattering of X-rays at the XRII input and the scattering of light at the XRII output, in the lenses, and in the base of the film or in the faceplate of the video monitor.

For an image formed by an XRII system, the SCR is the ratio of the signal at the center of the image with no test object in the X-ray beam to the signal at the center of the image with a specified contrast ratio test object in the beam. The SVGI is the reciprocal of the SCR. All signals used in calculating the SCR and SVGI are in terms of X-ray fluence or fluence rate or quantities linearly related to the fluence or fluence rate.

While the SCR is unbounded, ranging from 1 to infinity, the SVGI is bounded between 0 and 1. An increase of an already large value of SCR yields only a small change in the SVGI.

Although the SCR and the SVGI could, in principle, be calculated from the modulation transfer function, it is somewhat simpler to measure them directly. Additionally, the contrast ratio of the XRII itself has found general acceptance as an image quality parameter. Consequently, the determination of SCR and SVGI for XRII systems is deemed worthy of coverage in a NEMA Standards Publication.

## Scope

The procedures in this standard determine the system contrast ratio (SCR) and the system veiling glare index (SVGI) at the center of the image produced by an XRII system under a given set of test conditions. The determination is made on a system set up according to the specifications of the system designer or manufacturer. The measurement procedures described pertain to images formed by the photofluorographic film system, the cine film system, the video system, and the direct viewing system.



Copyright National Electrical Manufacturers Association
Provided by IHS under license with NEMA
No reproduction or networking permitted without license from IHS
Not for Resale

# Section 1
# REFERENCE STANDARDS AND TERMINOLOGY

## 1.1 REFERENCED STANDARDS

None.

## 1.2 DEGREES OF REQUIREMENTS

A statement incorporating the auxiliary verb "shall" indicates that compliance with a requirement is mandatory for compliance with the standard.

Statements incorporating other auxiliary verbs such as "should," "may," etc., refer to authorized engineering information and not to procedures required for compliance with the standard.

## 1.3 DEFINITIONS

### 1.3.1 Actual Focal Spot

Area on the surface of the X-ray tube target that intercepts the beam of electrons.

NEMA Standard 8-28-1991.

### 1.3.2 Automatic Brightness Control

A device that automatically controls the brightness at a preselected location in the output of the XRII by control of one or more of the technique factors influencing the electrical energy supplied to the X-ray tube, e.g., X-ray tube current and voltage.

NEMA Standard 8-28-1991.

### 1.3.3 Automatic Exposure Control

In an X-ray generator, the mode of operation in which one or more loading factors are controlled automatically in order to obtain at a preselected location a desired quantity of radiation. Loading factors are equivalent to technique factors.

NEMA Standard 8-28-1991.

### 1.3.4 Automatic Gain Control

A device that automatically controls one or more of the factors influencing the magnitude of the output of a video camera, e.g., degree of optical filtration, aperture of the video lens iris, or electronic video signal amplification, in order to obtain at a preselected location in the output video signal a desired signal magnitude.

NEMA Standard 8-28-1991.

### 1.3.5 Center of the Image

That point in the entrance plane of the XRII system which corresponds to the center of the smallest circle circumscribing the image.

NEMA Standard 8-28-1991.

### 1.3.6 Central Axis of the X-ray Field

The line perpendicular to the entrance plane of the XRII system passing through the center of the actual focal spot.

NEMA Standard 8-28-1991.

### 1.3.7 Central Magnification

With a small test object of known length placed symmetrically about the center of the image, the ratio of the test object length in the image to the test object length itself.

NEMA Standard 8-28-1991.

### 1.3.8 Entrance Plane of the XRII System

The plane perpendicular to the axis of the XRII and grazing that part of the XRII, including its housing, that protrudes most in the direction of the radiation source. The following components shall not be considered elements of the XRII housing:

antiscatter grid
collision sensors
ionization chambers
protective cover
removable magnetic shields and coils
spot-film device

NEMA Standard 8-28-1991.

### 1.3.9 Focal Spot

The projection along the central axis of the X-ray field of the actual focal spot.

NEMA Standard 8-28-1991.

### 1.3.10 Half Value Layer

The thickness of a specified material required to decrease the exposure rate of a beam of X-rays to one half its initial value. For the purpose of this definition, the solid angle of the radiation beam shall be as small as possible so that the quantity of scattered radiation included in the beam is minimized.

NEMA Standard 8-28-1991.

### 1.3.11 Kilovolts Peak (kVp)

The maximum potential difference, in kilovolts, applied, during an exposure, between the anode and cathode of an X-ray tube.

NEMA Standard 8-28-1991.

### 1.3.12 Nominal Image Size

The linear dimension of a small-test object in the entrance plane of the XRII system multiplied by the central magnification.

NEMA Standard 8-28-1991.

Copyright National Electrical Manufacturers Association
Provided by IHS under license with NEMA
No reproduction or networking permitted without license from IHS
Not for Resale

### 1.3.13 Output Image

The image produced by the XRII system that is visually perceivable by a human observer. Output channels of the system include:

processed photofluorographic film
processed cine film
television monitor
direct viewing system.

NEMA Standard 8-28-1991.

### 1.3.14 Radiation Quality

The characteristic of ionizing radiation determined by the spectral distribution of a radiation quantity with respect to radiation energy.

NEMA Standard 8-28-1991.

### 1.3.15 Source to Entrance Plane Distance (SED)

The distance from the actual focal spot to the entrance plane of the XRII system measured along the central axis of the X-ray field.

NEMA Standard 8-28-1991.

### 1.3.16 Useful Entrance Field Diameter

For an electro-optical XRII system, the diameter of the field in the entrance plane of the XRII system that can be used for the transmission of an X-ray pattern when the SED equals 1.00 meter. Limitations of this diameter other than by the XRII itself shall not be considered.

For an XRII with more than one magnification mode, the useful entrance field diameter for each of the magnification modes shall correspond to the same diameter of the XRII output image occurring with the largest useful entrance field diameter.

NEMA Standard 8-28-1991.

### 1.3.17 X-ray Image Intensifier System (XRII System)

That portion of an X-ray imaging system consisting of the XRII with its housing and the subsequent components of the imaging chain responsible for transmitting and displaying the detected X-ray pattern.

NEMA Standard 8-28-1991.

Copyright National Electrical Manufacturers Association
Provided by IHS under license with NEMA
No reproduction or networking permitted without license from IHS
Not for Resale

# Section 2
# TEST EQUIPMENT

## 2.1 CONTRAST RATIO TEST OBJECTS

The contrast ratio test objects shall be lead disks having a thickness of at least 3 mm. One disk shall have a diameter of $10 \pm 0.5$ mm. Other disks shall have diameters such that the area of a disk is $10 \pm 0.5$ percent of the area determined by the useful entrance field diameter of the mode of the XRII used for the measurement.

All disk diameters shall refer to the entrance plane of the XRII system. If the measurement cannot be performed with a disk in that plane, then the disk diameter shall be scaled such that its projection in that plane is as specified above.

NEMA Standard 8-28-1991.

## 2.2 IMAGE POSITION CALIBRATION TEMPLATE

An image position calibration template shall be used to locate the center of the image. The linear dimensions of the template shall equal or exceed the useful entrance field diameter of the XRII system being evaluated. A suggested template consisting of a thin, radiolucent panel with radiopaque demarcations along which distance measurements can be made is shown in Figure 2-1.

NEMA Standard 8-28-1991.

## 2.3 DENSITOMETER

A densitometer shall be used to measure the diffuse optical density in film images. The largest linear dimension of the sampling aperture of the densitometer shall not exceed the smaller of: 1) 3 mm or 2) one-third the diameter of the nominal image size of the contrast ratio test object being imaged.

NEMA Standard 8-28-1991.

## 2.4 PHOTOMETER

A photometer shall be used to measure the luminance of images displayed on a video monitor, on a film illuminator, or through the direct viewing system. The largest linear dimension of the sampling aperture of the photometer at the plane of the image shall not exceed the smaller of: 1) 5 mm or 2) one-third the diameter of the nominal image size of the contrast ratio test object being imaged.

In addition to the light originating from the sampled area of the image, light scattered in the optical elements of the photometer and from structures of the XRII system, the photometer or other objects in their vicinity may contribute to the total signal. If such spurious contributions exceed 3 percent of the signal from the sampled area, corrections for

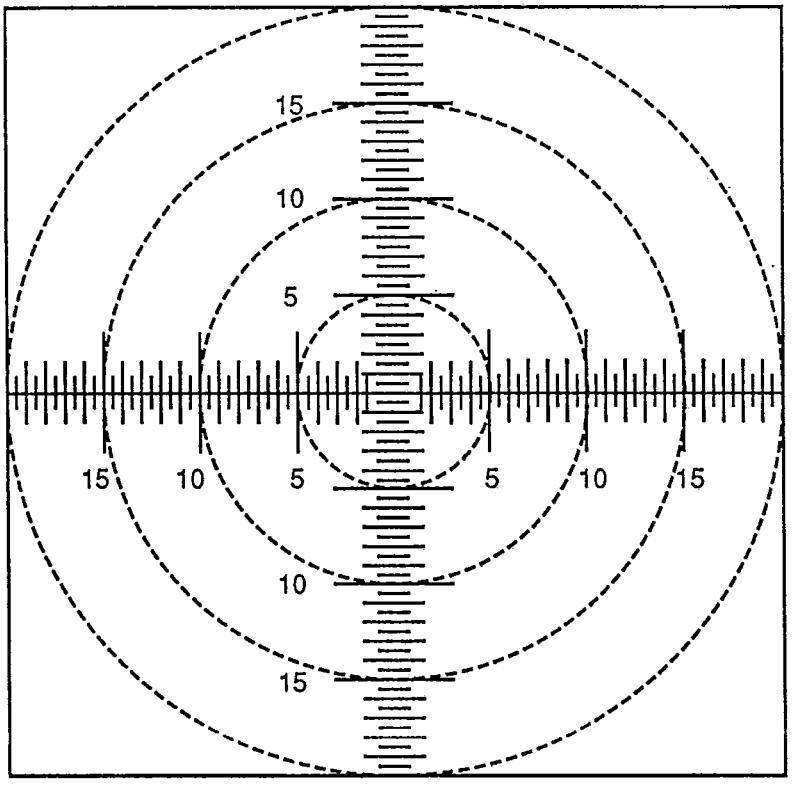


**Figure 2-1**
**IMAGE POSITION CALIBRATION TEMPLATE**

Copyright National Electrical Manufacturers Association
Provided by IHS under license with NEMA
No reproduction or networking permitted without license from IHS
Not for Resale

these contributions shall be applied. Corrections shall be established for the following conditions:

a. Each spectrum encountered in the measurement of the SCR, e.g., the output phosphor of the XRII, the phosphor of the video monitor, and the illuminant in the film viewbox.
b. Each size of contrast ratio test object.
c. No test object in the X-ray beam.

A method of determining the correction is given in the appendix.

NEMA Standard 8-28-1991.

## 2.5 X-RAY FLUENCE AND FLUENCE RATE MONITOR

This monitor, for example, a dosimetric or transmission ionization chamber, shall be used to measure the relative X-ray fluence (quanta per unit area) or fluence rate (quanta per unit area per unit time) at the entrance plane of the XRII system. The monitor shall respond linearly to X-ray fluence or fluence rate over the range of values used for the system contrast ratio determination. If the monitor intrudes upon the center of the image, then it shall uniformly attenuate the X-ray beam over the area defined by the useful entrance field diameter. If such a monitor is used, the radiation quality requirements of section 3.3.1 shall be met with the monitor in place.

NEMA Standard 8-28-1991.

Copyright National Electrical Manufacturers Association
Provided by IHS under license with NEMA
No reproduction or networking permitted without license from IHS

Not for Resale

# Section 3
# STANDARD SYSTEM TEST CONDITIONS

## 3.1 GENERAL REQUIREMENTS

The system shall be set up according to the specifications of the manufacturer, except as noted in paragraphs below. During the test, except where explicitly permitted, no change shall be made to the system setup. This includes, but is not limited to, adjustment of the X-ray image intensifier and video camera, as well as the focus of the XRII and any lenses and video cameras.

It is recognized that under some conditions, it will be necessary to remove a grid or dissaemble a window covering to satisfy the test conditions. Deviations from the standard test conditions are permitted only where it is impractical to meet those conditions. Such deviations must be explicitly stated in the Presentation of Results. Determination of SCR and SVGI for any useful entrance field diameter shall be made with a single system configuration.

It shall be permitted to disable automatic circuits to achieve the requirements of this standard.

The relative positions of the XRII system and the apparatus for the determination are schematically illustrated in Figure 3-1. No object shall be in the X-ray beam unless it is normally a component of the X-ray system or is explicitly called for in this standard.

NEMA Standard 8-28-1991.

## 3.2 SOURCE TO ENTRANCE PLANE DISTANCE (SED)

The standard source to entrance plane distance (SED) shall be 100 ± 1 cm. Equipment of fixed SED or whose adjustment range does not span the standard SED shall be tested at the spacing recommended by the manufacturer. If the SED used is not the standard SED, the value of the SED used shall be reported in the presentation of results.

NEMA Standard 8-28-1991.

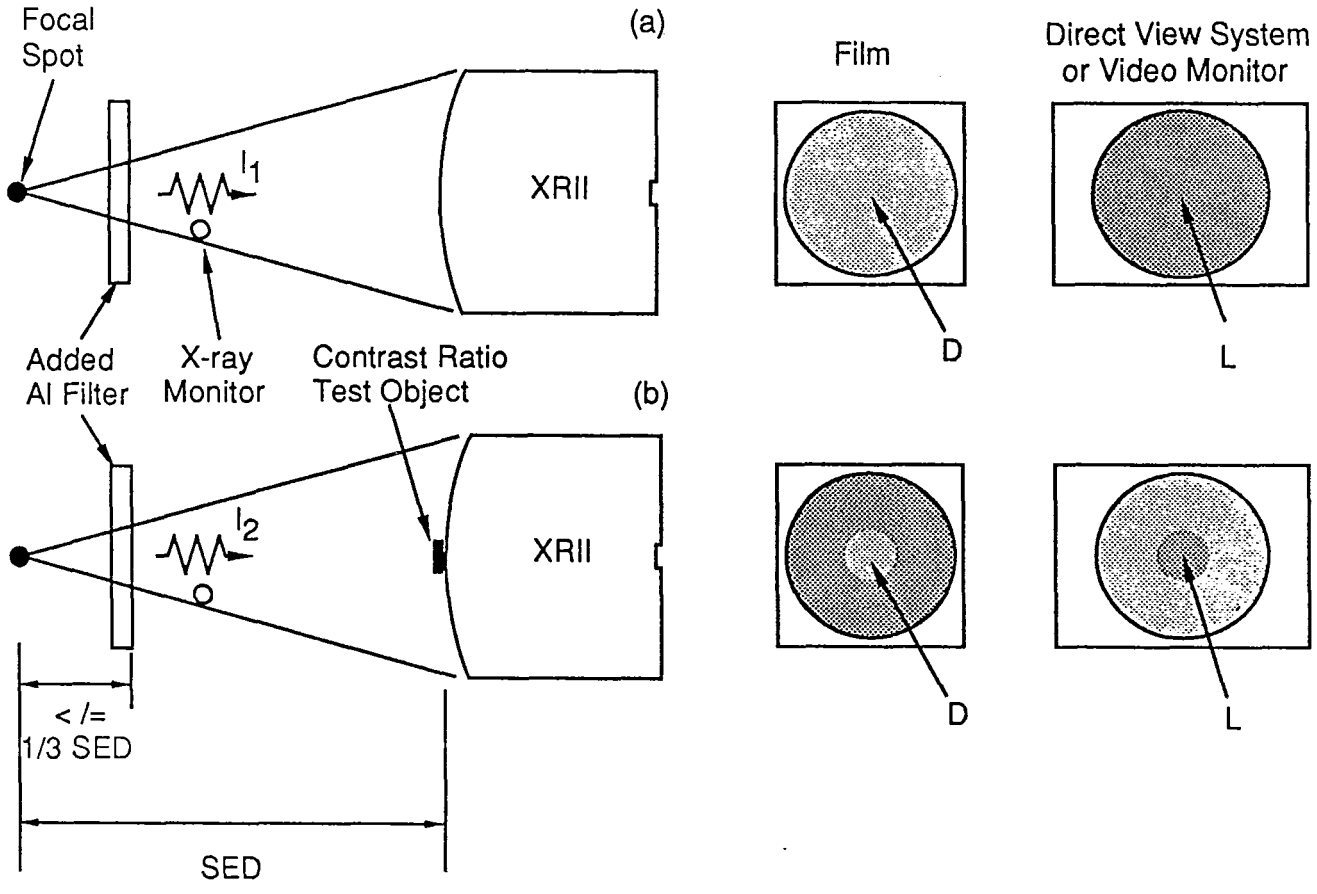


**Figure 3-1**
**EQUIPMENT SETUPS FOR THE DETERMINATION**

Copyright National Electrical Manufacturers Association
Provided by IHS under license with NEMA
No reproduction or networking permitted without license from IHS
Not for Resale

## 3.3 RADIATION REQUIREMENTS

### 3.3.1 Radiation Quality

The radiation quality shall be such that the X-ray beam exhibits a half value layer of 7.0 ± 0.2 mm of aluminum with total filtration of 22 ± 0.5 mm of aluminum equivalent and operating with an X-ray tube potential difference of approximately 75 kVp. The total filtration shall include at least 20 mm of pure aluminum (99.8 percent). All added filter material shall be uniform and positioned as close as possible to the X-ray source. The distance from the entrance plane of the XRII system to the filter shall not be less than two-thirds of the SED.

NEMA Standard 8-28-1991.

### 3.3.2 Radiation Collimation

The X-ray beam collimators shall be adjusted so that the collimator blades are just visible within the image.

NEMA Standard 8-28-1991.

## 3.4 ANTI-SCATTER GRID

If the anti-scatter grid is removable, it shall be removed for this test. If it is not removable, its presence, its ratio, line frequency, absorbing strip material, interspace material, and cover material shall be reported in the presentation of results.

NEMA Standard 8-28-1991.

## 3.5 POSITION OF THE CONTRAST RATIO TEST OBJECT

The test object disk shall be positioned at the center of the image in the entrance plane of the XRII system with the axis of the disk perpendicular to the entrance plane. If the entrance plane is not accessible, the test object shall be placed as close to this plane as possible and the distance between the test object and the entrance plane shall be reported in the presentation of results.

NEMA Standard 8-28-1991.

It is recommended that as little supporting material as possible be used to suspend the lead disk in the X-ray field. The use of a plastic sheet with a thickness of only 1 mm can produce a measureable reduction in the SCR.

Authorized Engineering Information 8-28-1991.

## 3.6 POSITION OF THE X-RAY FLUENCE OR FLUENCE RATE MONITOR

The X-ray fluence or fluence rate monitor shall be positioned between the added aluminum filter and the entrance plane of the XRII system. The distance from the fluence monitor to the entrance plane shall not be less than 50 cm. If the fluence monitor does not intercept the entire beam uniformly, the projection of the monitor on the entrance plane of the XRII system shall be at a distance of at least 0.35 of the useful entrance field diameter from the center of the image. This monitor shall remain undisturbed in the X-ray field throughout the determination.

NEMA Standard 8-28-1991.

Copyright National Electrical Manufacturers Association
Provided by IHS under license with NEMA
No reproduction or networking permitted without license from IHS

Not for Resale

# Section 4
# DETERMINATION

## 4.1 MEASUREMENT PROCEDURES

### 4.1.1 Cine and Photofluorography Systems

With the X-ray tube potential difference set at the value determined in section 3.3.1 and no test object or other objects not specified in Section 3 in the X-ray beam, expose the film to yield a gross optical density D in the range of 1.2 to 1.7 in the center of the image. (See Figure 3-1(a).) Record the fluence monitor reading, $I_1$, for this level of X-ray fluence. It is permissible to obtain measurements of film density at several levels of X-ray fluence and interpolate to determine the fluence at density D.

Position a contrast ratio test object at the center of the image, the X-ray tube potential at the value determined in Section 3.3.1, and the X-ray fluence to yield the same gross optical density D in the image of the test object. (See Figure 3-1(b).) Record the fluence monitor reading, $I_2$, for this level of X-ray fluence. Again, determination by interpolation is permissible. It is necessary that the X-ray fluence be increased by increasing the X-ray tube current while maintaining the exposure time near the value used to determine $I_1$, in order to avoid errors due to variation of film sensitivity with exposure time ("reciprocity failure"). The X-ray tube kVp, the X-ray beam filtration, and the SED shall not be changed to change the fluence.

Since the image of the test object, particularly for the cine system, may be small with respect to the aperture of common, diffuse density densitometers, it shall be permitted to measure the density or transmission of the films with a microdensitometer or spot photometer (with the film illuminated on a viewbox). The same instrument shall be used to measure the density of film images both with and without the test object in the field. Corrections to measurements made with a photometer shall be performed as described in section 2.4.

Process all films to be used for the measurement in the same processing run.

NEMA Standard 8-28-1991.

### 4.1.2 Direct Viewing System

With the X-ray tube potential difference set at the value determined in section 3.3.1 and no test object or other object not specified in Section 3 in the X-ray beam, operate the X-ray system to achieve a level of brightness that is near the middle of the range of the photometer. (See Figure 3-1(a).)

Measure the brightness at the center of the image and record the X-ray fluence rate $I_1$.

Position a contrast ratio test object at the center of the image, set the X-ray tube potential at the value determined in section 3.3.1, and increase the X-ray fluence rate until the brightness at the center of the image equals (± 3 percent) the value measured with no object in the X-ray beam. (See Figure 3-1 (b).) The X-ray tube kVp, the X-ray beam filtration, and the SED shall not be changed to change the fluence rate. Record the X-ray fluence rate $I_1$.

Corrections to measurements made with a photometer shall be performed as described in section 2.4.

NEMA Standard 8-28-1991.

### 4.1.3 Video Sytem

Remove sources of ambient illumination that illuminate the video monitor faceplate.

With the X-ray source off adjust the brightness control of the video monitor so that the raster is just discernible. If circular or other form of blanking is applied to the video signal, it is the unblanked video interior to the boundary of the blanking that shall be just discernible.

With the X-ray tube potential difference set at the value determined in section 3.3.1 and no test object or other object not specified in Section 3 in the beam, adjust the X-ray tube current to yield the manufacturer's or designer's specified exposure rate at the entrance plane of the XRII system. Adjust the contrast control of the video monitor to yield a luminance of $30 \pm 1$ ft-Lambert ($94 \pm 3$ candela/$m^2$) at the center of the image.

Iterate the procedures for setting the brightness and contrast controls of the video monitor until the raster is just discernible with the x-rays off and the luminance is $30 \pm 1$ ftLambert ($94 \pm 3$ candela/$m^2$) with the X-rays on.

Disable all automatic brightness and automatic gain controls in order to maintain constant X-ray generator output at the level just set and constant gain through the video system.

Position a contrast ratio test object at the center of the image. Maintaining the X-ray generator and video system operating conditions previously established, measure the luminance L at the center of the image and the relative X-ray fluence rate $I_2$ (See Figure 3-1(b).)

Remove the test object and reduce the X-ray fluence rate until the video monitor luminance at the center of the image is equal ( 5 percent) to the value L measured previously. The X-ray tube kVp, the X-ray beam filtration, and the SED shall not be changed to change the fluence rate. Measure the relative X-ray fluence rate $I_1$. (See Figure 3-1(a).)

Corrections to measurements made with a photometer shall be performed as described in section 2.4.

NEMA Standard 8-28-1991.

Copyright National Electrical Manufacturers Association
Provided by IHS under license with NEMA
No reproduction or networking permitted without license from IHS
Not for Resale

## 4.2 PRESENTATION OF RESULTS

### 4.2.1 Analysis

The SCR is calculated using the equation SCR = $I_2/I_1$ and the SVGI is calculated using the equation SVGI = $I_1/I_2$ with $I_1$ and $I_2$ as defined in sections 4.1.1, 4.1.2, and 4.1.3.

NEMA Standard 8-28-1991.

The presentation of results shall specify the following:

a. XRII system type identification, e.g., model name or number; Useful entrance field diameter
b. Imaging subsystem, e.g., video, cine, photofluorographic
c. Diameter (in mm) and thickness (in mm) of the contrast ratio test objects
d. System contrast ratio, SCR, and its uncertainty
e. System veiling glare index, SVGI, and its uncertainty.

Deviations from the standard test conditions shall be listed; e.g.,

Determination with the contrast ratio test object not in the entrance plane of the XRII system (state the distance of the object from the entrance plane).
Grid not removable (state the ratio, line frequency, absorbing strip material, interspace material, and cover material of the grid).
Determination at non-standard SED (state the SED used).

NEMA Standard 8-28-1991.

Copyright National Electrical Manufacturers Association
Provided by IHS under license with NEMA
No reproduction or networking permitted without license from IHS
Not for Resale

## Section 5
## STATEMENT OF COMPLIANCE

If a manufacturer states that a product is in compliance with this NEMA standard, the presentation of the results of the determination shall be according to section 4.2. Any deviations from the standard test conditions shall be stated.

Compliance with this Standard shall be stated as "System Contrast Ratio per NEMA Standard XR 16."

NEMA Standard 8-28-1991.

Copyright National Electrical Manufacturers Association
Provided by IHS under license with NEMA
No reproduction or networking permitted without license from IHS
Not for Resale

Copyright National Electrical Manufacturers Association
Provided by IHS under license with NEMA
No reproduction or networking permitted without license from IHS

Not for Resale

# Appendix
# DETERMINATION OF A CORRECTION FOR PHOTOMETER VEILING GLARE

The following is a suggested procedure for determining the correction for veiling glare in measurements made with a photometer:

Set up the photometer for performing measurements in the normal manner.

As near as possible to the plane containing the image being analyzed, position an opaque mask containing an aperture. The diameter of the aperture should be variable over the range of about 0.7 to 1.4 of the diameter of the photometer's sampling aperture at the plane of the image.

Measure the photometer's output as a function of the area of the aperture in the mask.

By interpolation determine the photometer signal, $L_1$, that would be obtained if the mask aperture exactly matched the photometer's sampling aperture.

Obtain the photometer signal, $L_2$, with no opaque mask.

Calculate the correction factor $K = L_1/L_2$.

When acquiring SCR measurements under the same conditions of image content and illuminant spectrum but with no mask between the source and the photometer, multiply the photometer signal by the factor K.

If the presence of an opaque mask with an appropriate aperture results in photometer readings within 3 percent of measurements obtained by the application of the correction procedure given above, all measurements may be made with the mask in place and no correction factor applied.

Copyright National Electrical Manufacturers Association
Provided by IHS under license with NEMA
No reproduction or networking permitted without license from IHS
Not for Resale

# NEMA STANDARDIZATION

The purpose of NEMA Standards, their classification and status are set forth in certain clauses of the NEMA *Standardization Policies and Procedures* manual and are referenced below:

## Purpose of Standards

National Electrical Manufacturers Association Standards are adopted in the public interest and are designed to eliminate misunderstandings between the manufacturer and the purchaser and to assist the purchaser in selecting and obtaining the proper product for their particular needs. Existence of a National Electrical Manufacturers Association Standard does not in any respect preclude any member or nonmember from manufacturing or selling products not conforming to the standard.

*(Standardization Policies and Procedures, p. 1)*

## Definition of a Standard

A standard of the National Electrical Manufacturers Association defines a product, process or procedure with reference to one or more of the following: nomenclature, composition, construction, dimensions, tolerances, safety, operating characteristics, performance, rating, testing, and the service for which they are designed.

*(Standardization Policies and Procedures, p. 2)*

## Dimensions

Where dimensions are given for interchangeability purposes, alternate dimensions satisfying the other provisions of the Standards Publication may be capable of otherwise equivalent performance.

*(Standardization Policies and Procedures, p. 8)*

## Categories of Standards

National Electrical Manufacturers Association Standards are of three classes:

1. NEMA Standard, which relates to a product, process or procedure commercially standardized and subject to repetitive manufacture, which standard has been approved by at least 90 percent of the members of the Subdivision eligible to vote thereon;
2. Suggested Standard for Future Design, which may not have been regularly applied to a commercial product, but which suggests a sound engineering approach to future development, which standard has been approved by at least two-thirds of the members of the Subdivision eligible to vote thereon.
3. Adoptive Standard, which is adopted in whole or in part from the standards of another organization, either domestic, regional, or international.

*(Standardization Policies and Procedures, pp 7 & 16)*

## Authorized Engineering Information

Authorized Engineering Information consists of explanatory data and other engineering information of an informative character not falling within the classification of NEMA Standard or Suggested Standard for Future Design, which standard has been approved by at least two-thirds of the members of the Subdivision eligible to vote on the standard.

*(Standardization Policies and Procedures, pp. 7 & 16)*

## Official Standards Proposal

An Official Standards Proposal is an official draft of a proposed standard which is formally recommended to an outside organization(s) for consideration, comment and/or approval, and which has been approved by at least 90 percent of the members of the Subdivision eligible to vote thereon. *(Standardization Policies and Procedures, pp 7 & 16)*

## Identification of Status

Standards in NEMA Standards Publications are identified in the foreword or following each standard as "NEMA Standard" or "Suggested Standard for Future Design." These indicate the status of the standard. These words are followed by a date which indicates when the standard was adopted in its present form by the Association.

The material identified as "Authorized Engineering Information" and "Official Standards Proposal" is designated similarly.

July 17, 1990

Copyright National Electrical Manufacturers Association
Provided by IHS under license with NEMA
No reproduction or networking permitted without license from IHS
Not for Resale

# X-RAY IMAGING PRODUCTS SECTION OF THE NATIONAL ELECTRICAL MANUFACTURERS ASSOCIATION

## MEMBER COMPANIES

ADAC Laboratories
Milpitas, CA 95035-7443

Advanced Instrument Development, Inc.
Melrose Park, IL 60160

Belmont Equipment Corporation
Somerset, NJ 08873

Bennett X-Ray Corporation
Copiague, NY 11726

Camtronics Ltd. Medical Systems
Hartland, WI 53029

Capintec, Inc.
Pittsburgh, PA 15238

Comet North America
Norwalk, CT 06850

Continental X-Ray Corporation
Broadview, IL 60153

Dornier Medical Systems, Inc.
Marietta, GA 30144

Eastman Kodak Company
Rochester, NY 14653-9105

Eigen
Nevada City, CA 95959

Varian Power Grid & X-Ray Tube Products
Salt Lake City, UT 84104

Elema-Schonander, Inc.
Schaumburg, IL 60173-3887

Elscint, Inc.
Hackensack, NJ 07601

Eureka X-Ray Tube, Inc.
Arlington Heights, IL 60004-1818

Fischer Imaging Corporation
Denver, CO 80241

Gammex, Inc.
Milwaukee, WI 53226-0708

GE Medical Systems
Milwaukee, WI 53201

Hewlett-Packard Company
McMinnville, OR 97128

Instrumentarium Imaging, Inc.
Milwaukee, WI 53207

Liebel-Flarsheim Company
Cincinnati, OH 45215-6305

J. Morita Corporation
Torrance, CA 90505

Nuclear Associates
Carle Place, NY 11514

Oldelft Corporation of America
Fairfax, VA 22031

Parker Medical, Inc.
New Milford, CT 06776

Philips Medical Systems, North America Company
Shelton, CT 06484

Picker International, Inc.
Highland Heights, OH 44143

Siemens Medical Systems, Inc.
Iselin, NJ 08830

Thomson Components & Tubes Corporation
Totowa, NJ 07511

3M Imaging Systems Division
St. Paul, MN 55144

Toshiba America Medical Systems Inc.
Tustin, CA 92680-2068

Universal
Chicago, IL 60651

XRE Corporation
Littleton, MA 01460

Copyright National Electrical Manufacturers Association
Provided by IHS under license with NEMA
No reproduction or networking permitted without license from IHS
Not for Resale