XR 10-86 6470247 0005737 0

B-53-25

NEMA STANDARDS PUBLICATION NO. XR 10

nema

Measurement of the Maximum Symmetrical Radiation Field From a Rotating Anode X-Ray Tube Used For Medical Diagnosis

NEMA

NATIONAL ELECTRICAL MANUFACTURERS ASSOCIATION ■ 2101 L STREET, N.W., WASHINGTON, D.C. 20037

Copyright National Electrical Manufacturers Association
Provided by IHS under license with NEMA
No reproduction or networking permitted without license from IHS
Not for Resale

NEMA XR 10-1986

XR 10

MEASUREMENT OF THE MAXIMUM SYMMETRICAL RADIATION FIELD FROM A ROTATING ANODE X-RAY TUBE USED FOR MEDICAL DIAGNOSIS

Published by

National Electrical Manufacturers Association
2101 L Street, N.W.
Washington, D.C. 20037

© 1987 by National Electrical Manufacturers Association

Copyright National Electrical Manufacturers Association
Provided by IHS under license with NEMA
No reproduction or networking permitted without license from IHS
Not for Resale

TABLE OF CONTENTS

		Page
	FOREWORD	i
	SCOPE	ii
Section 1	DEFINITIONS	1
Section 2	TYPICAL DISTRIBUTION	
	Anode Heel Cut-off	2
	Cathode Edge of Radiation Field	2
Section 3	MAXIMUM SYMMETRICAL RADIATION FIELD	
	Orientation of the Maximum Symmetrical Radiation Field	3
	Distribution of Air Kerma Rate	3
Section 4	MEASUREMENT OF THE DISTRIBUTION OF THE AIR KERMA RATE	
	Basic Method	4
	Measuring Arrangement	4
	Measuring Conditions	4
	Photographic Technique	5
	Type of Film	5
	Exposure	5
	Measurement of Blackening	5
	Determination of Air Kerma Rate	5
Section 5	STATEMENT OF COMPLIANCE	6

TABLES

Table 4-1	Radiation Quality	4

FIGURES

Figure 2-1	Typical Distribution of Relative Air Kerma Rate Along the Major Axis X of a Maximum Symmetrical Radiation Field	2
Figure 3-1	Orientation of the Maximum Symmetrical Radiation Field	3
Figure 4-1	Measurement of the Distribution of the Air Kerma Rate	5

Copyright National Electrical Manufacturers Association
Provided by IHS under license with NEMA
No reproduction or networking permitted without license from IHS
Not for Resale

Foreword

The maximum radiation field size for a particular X-ray tube may limit the application of the tube for some medical diagnostic examinations. Furthermore, the rules and regulations published by the Food and Drug Administration require that the maximum field size be determined to ensure compatibility with beam limiting devices such as collimators.

Tube manufacturers normally specify the target angle of each tube in documents accompanying the tube. However, some list the mechanical or physical anode angle (European) while others list the useful anode angle (American). The useful anode angle, when published, is less than the physical angle because of reduced radiation reaching the anode edge of the field (heel cut-off). Field sizes calculated from the useful anode angle may not be accurate because of variation in the heel cut-off allowance used by different manufacturers, tolerance in the actual physical anode angle, and the differences in target material and roughness. In particular, a rough target will cause a greater loss of field coverage than a smooth unused target surface.

In addition, the air kerma rate over the radiation field decreases with distance from the reference axis to the edge of the radiation field according to the inverse square law with respect to distance from the focal spot.

Absorption in the material in the target affects the radiation quality, as well as the air kerma rate. Therefore, the measurement of the air kerma rate is affected by the amount of additional filtration in the radiation beam. For this reason, this standard includes substantial additional filtration of a given value in the radiation beam. No other objects are to be permitted in the radiation beam.

Copyright National Electrical Manufacturers Association
Provided by IHS under license with NEMA
No reproduction or networking permitted without license from IHS
Not for Resale

Scope

This NEMA Standards Publication provides methods for measuring the maximum symmetrical radiation field from a rotating anode X-ray tube used for medical diagnosis.

This NEMA Standards Publication is not applicable for measuring the radiation field of a used tube with a roughened focal track or a tube designed to have a non-uniform air kerma rate for special applications.

Copyright National Electrical Manufacturers Association
Provided by IHS under license with NEMA
No reproduction or networking permitted without license from IHS
Not for Resale

MEASUREMENT OF THE MAXIMUM SYMMETRICAL RADIATION FIELD FROM A ROTATING ANODE X-RAY TUBE USED FOR MEDICAL DIAGNOSIS

Section 1

DEFINITIONS

1.1 AIR KERMA RATE

Kinetic energy released per unit time in air by ionizing radiation where the unit is joule per kilogram per second or gray (Gy) per second.

NEMA Standard 11-20-1986.

1.2 ANODE ANGLE

Target angle (useful or mechanical) in an X-ray tube or X-ray tube assembly.

NEMA Standard 11-20-1986.

1.3 ANODE ANGLE (HEEL CUT-OFF)

Attenuation of the radiation beam at the anode edge of the radiation field by the surface of the target.

NEMA Standard 11-20-1986.

1.4 CENTRAL RAY

A line perpendicular to the X-ray port plane and passing through the focal spot midpoint.

NEMA Standard 11-20-1986.

1.5 FOCAL SPOT

The Section at which the target of an X-ray tube intercepts the electron beam.

NEMA Standard 11-20-1986.

1.6 MEASURING PLANE

The plane in which the radiation field is measured.

NEMA Standard 11-20-1986.

1.7 RADIATION BEAM

A spatial region enclosed in a solid angle and containing a flux of ionizing radiation originating from a point radiation source.

NEMA Standard 11-20-1986.

1.8 RADIATION FIELD

Area on a surface intercepted by a radiation beam.

NEMA Standard 11-20-1986.

1.9 RADIATION QUALITY

Characteristic of ionizing radiation determined by the spectral distribution of a radiation quantity with respect to radiation energy.

NEMA Standard 11-20-1986.

1.10 REFERENCE AXIS

A line through the center of the radiation source that is normal to the imaging plane, but not always identical to the Central Ray.

NEMA Standard 11-20-1986.

1.11 TARGET

That part of the X-ray tube anode where a beam of electrons is directed to produce ionizing radiation.

NEMA Standard 11-20-1986.

Copyright National Electrical Manufacturers Association
Provided by IHS under license with NEMA
No reproduction or networking permitted without license from IHS
Not for Resale

Section 2
TYPICAL DISTRIBUTION

2.1 ANODE HEEL CUT-OFF

Figure 2-1 illustrates the radiation cut-off and attenuation at the anode edge of the radiation field. The air kerma rate is attenuated to near zero where a projected line from the focal spot, parallel to the face of the target, intercepts the measuring plane. The anode edge of the radiation field is along a line where the percentage air kerma rate does not fall below a value as specified in 3.2.

NEMA Standard 11-20-1986.

2.2 CATHODE EDGE OF RADIATION FIELD

The cathode edge of the symmetrical radiation field is along a line which is the same number of degrees from the reference axis in the cathode direction as the anode edge is in the anode direction.

NEMA Standard 11-20-1986.

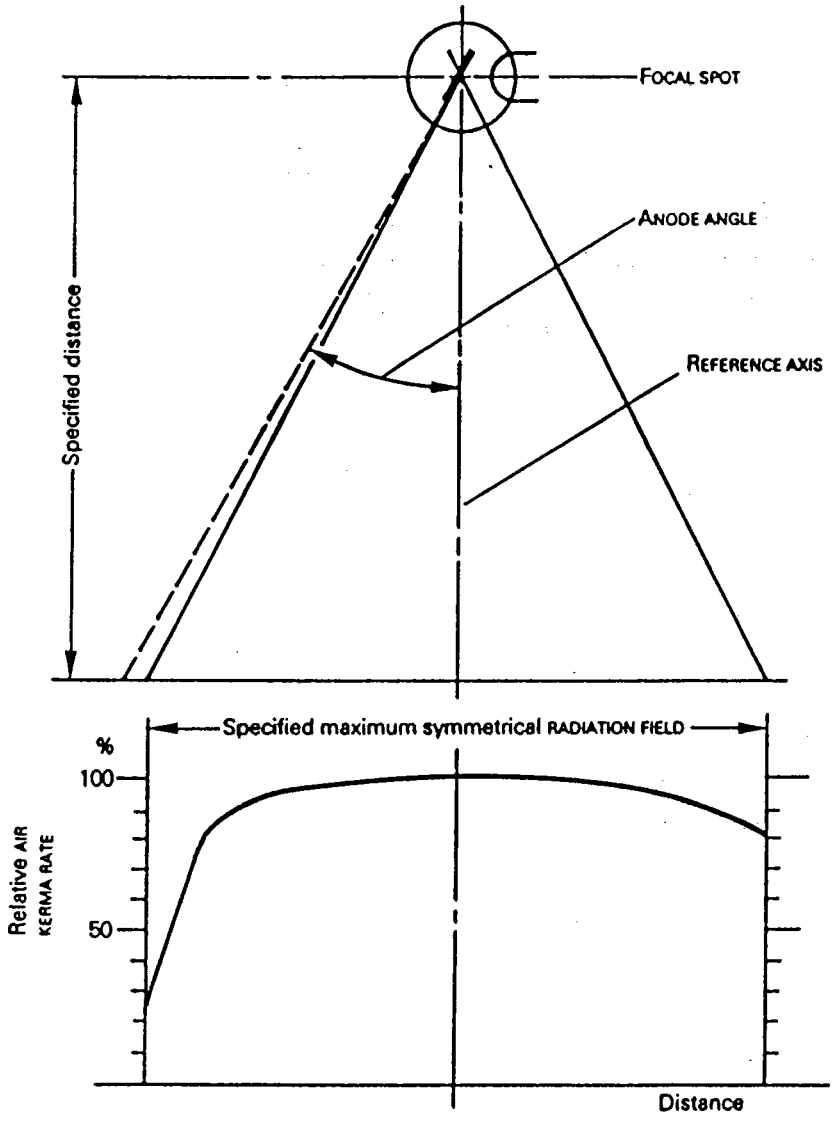

Figure 2-1
TYPICAL DISTRIBUTION OF THE RELATIVE AIR KERMA RATE ALONG THE MAJOR AXIS X OF A MAXIMUM SYMMETRICAL RADIATION FIELD

Copyright National Electrical Manufacturers Association
Provided by IHS under license with NEMA
No reproduction or networking permitted without license from IHS
Not for Resale

Section 3
MAXIMUM SYMMETRICAL RADIATION FIELD

3.1 ORIENTATION OF THE MAXIMUM SYMMETRICAL RADIATION FIELD

For the determination of the maximum symmetrical radiation field, the distribution of air kerma rate shall be measured in the measuring plane according to Figure 3-1.

The major axis X of the measuring plane is the projection in the reference direction of the longitudinal axis of the X-ray tube assembly. The longitudinal axis of the X-ray tube assembly is not always parallel to the major X axis of the measuring plane.

The major axis Y is normal to the axis X.

Both major axes intersect on and are normal to the reference axis.

The orientation of the maximum symmetrical radiation field is shown in Figure 3-1.

If the limitation of the radiation field, as caused by the anode angle (heel effect), follows a line in a direction other than normal to the longitudinal axis of the X-ray tube assembly, the major axis X shall be adjusted accordingly.

NEMA Standard 11-20-1986.

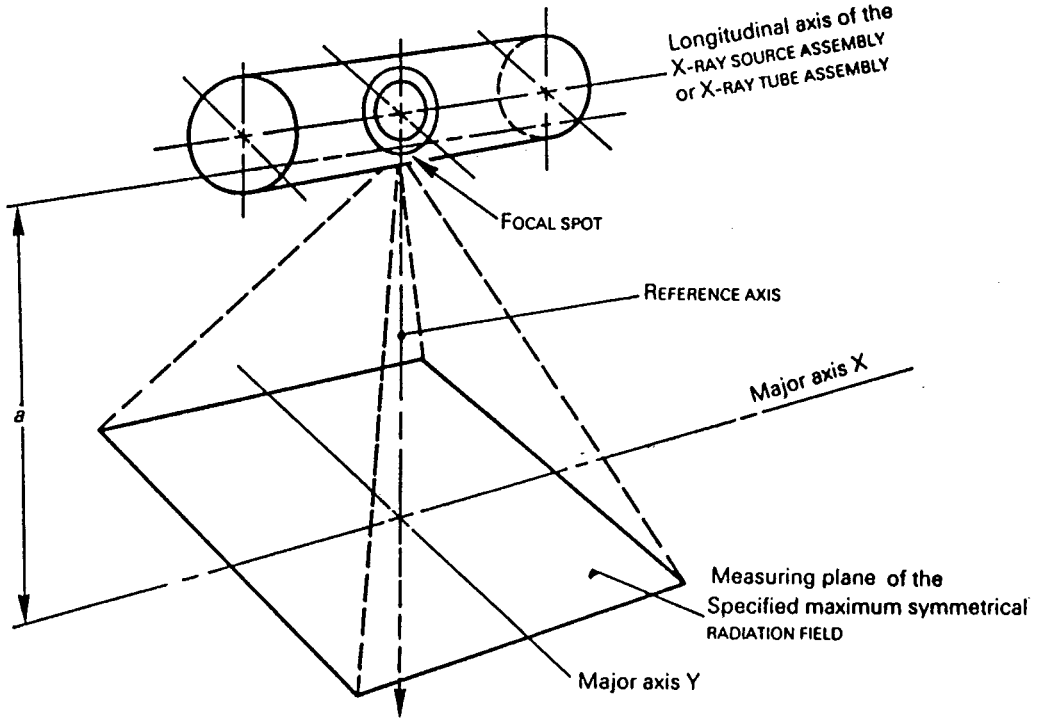

Figure 3-1
ORIENTATION OF THE MAXIMUM SYMMETRICAL RADIATION FIELD

3.2 DISTRIBUTION OF AIR KERMA RATE

A maximum symmetrical radiation field shall be determined as the dimensions of the greatest radiation field at a specified distance from the focal spot symmetrical with respect to the specified reference axis, with its edge parallel to the major axes, in which the distribution of relative air kerma rate along the perimeter is not less than 25 percent of the maximum in the measuring plane.

NEMA Standard 11-20-1986.

Copyright National Electrical Manufacturers Association
Provided by IHS under license with NEMA
No reproduction or networking permitted without license from IHS
Not for Resale

Section 4

MEASUREMENT OF THE DISTRIBUTION OF THE AIR KERMA RATE

4.1 BASIC METHOD

The measurement of the distribution of the air kerma rate shall be made by production of a direct radiograph and subsequent densitometric measurement or by another dosimetric method of comparable resolution.

NEMA Standard 11-20-1986.

4.2 MEASURING ARRANGEMENT

An added filter, according to Table 4-1, and of sufficient dimensions to intercept the radiation field shall be placed at 75 percent of the distance a_{min} (see Figure 4-1).

The measuring plane shall be at the specified distance(s), a_{min}, of the radiation field from the focal spot and normal to the reference axis to within 0.04 radians ($\sim 2°$) (see Figure 4-1).

NEMA Standard 11-20-1986.

4.3 MEASURING CONDITIONS

The anode of the X-ray tube shall be rotating.

The X-ray tube anode to cathode voltage shall be as given in Table 4-1. A three phase or constant potential power supply shall be used.

The dosimetric and densitometric conditions shall be selected to prevent a significant change in the dimensions determined where a refinement of the detector system is experienced.

NEMA Standard 11-20-1986.

Table 4-1
RADIATION QUALITY

Nominal X-Ray Tube Voltage U Max. kv	Added Filter Thickness of Aluminum mm	Required X-Ray Tube Voltage U kv
$30 \leq U \text{ max} \leq 50$	5	30
$50 < U \text{ max} \leq 75$	10	50
$75 < U \text{ max} \leq 125$	20	75
$125 < U \text{ max}$	20	75 and 125

Copyright National Electrical Manufacturers Association
Provided by IHS under license with NEMA
No reproduction or networking permitted without license from IHS
Not for Resale

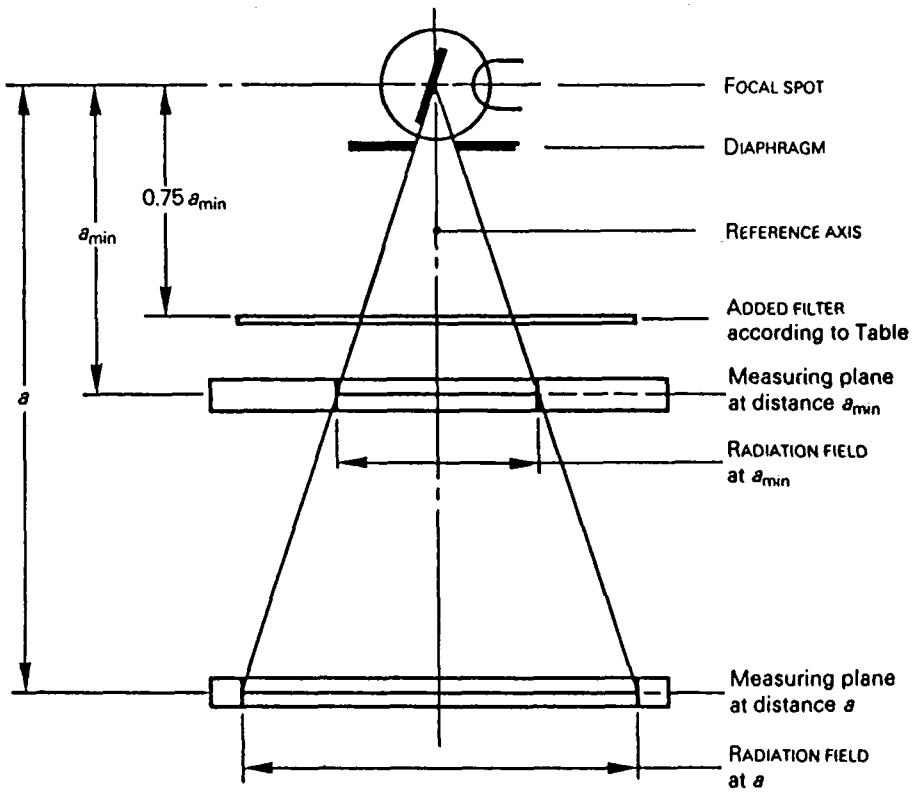

Figure 4-1
MEASURING ARRANGEMENT

4.4 PHOTOGRAPHIC TECHNIQUE

4.4.1 Type of Film

The radiographic film shall be a non-screen film of a type whose gradient of the sensitometric curve (D vs. $\log_{10}k$) is linear at least from a diffuse transmission density 0.5 up to 1.6.

The radiographic film shall be large enough to extend up to 105 percent of the radiation field in each direction.

NEMA Standard 11-20-1986.

4.4.2 Exposure

The radiographic film shall be exposed so that, after full development, a local diffuse density between 1.0 and 1.4 is obtained in the area of the greatest blackening.

NEMA Standard 11-20-1986.

4.4.3 Measurement of Blackening

The direct radiogram obtained shall be scanned by means of a densitometer. Neither the width nor the length (nor a circular diameter) of the slit of the densitometer shall exceed 2 mm.

NEMA Standard 11-20-1986.

4.4.4 Determination Of Air Kerma Rate

The values of density above base and fog shall be transformed into values of air kerma rate by means of a sensitometric curve for the film material used. The sensitometric curve shall be established using an identical film exposed under essentially the same conditions and processed under the same conditions as those used for the production of the direct radiograph.

NEMA Standard 11-20-1986.

Copyright National Electrical Manufacturers Association
Provided by IHS under license with NEMA
No reproduction or networking permitted without license from IHS
Not for Resale

Section 5

STATEMENT OF COMPLIANCE

If a manufacturer desires to state his product is in compliance with the NEMA Standards Publication, it shall be indicated as follows:

Maximum symmetrical radiation field . . . mm/ . . . mm* at an SID of . . . mm
Complies with NEMA XR 10-1986

or

Maximum symmetrical radiation field . . . inches/. . . inches* at an SID . . . inches
Complies with NEMA XR 10-1986

*The first dimension shall be in a direction parallel to the longitudinal axis of the X-ray tube.

Combinations of radiation fields and SID's given in the form of a table or curve are acceptable.

NEMA Standard 11-20-1986.

Copyright National Electrical Manufacturers Association
Provided by IHS under license with NEMA
No reproduction or networking permitted without license from IHS
Not for Resale

September 1984

NEMA STANDARDIZATION

The purpose of NEMA Standards, their classification and status are set forth in certain clauses of the NEMA Bylaws, which are quoted below:

Purpose of Standards

National Electrical Manufacturers Association Standards are adopted in the public interest and are designed to eliminate misunderstandings between the manufacturer and the purchaser and to assist the purchaser in selecting and obtaining the proper product for its particular need. Existence of a National Electrical Manufacturers Association Standard does not in any respect preclude any member or nonmember from manufacturing or selling products not conforming to the standard.

(Bylaw—Art. V, Sec. 1)

Definition of a Standard

A standard of the National Electrical Manufacturers Association defines a product, process or procedure with reference to one or more of the following: nomenclature, composition, construction, dimensions, tolerances, safety, operating characteristics, performance, rating, testing, and the service for which they are designed.

(Bylaw—Art. V, Sec. 2, Subsection A)

Dimensions

Where dimensions are given for interchangeability purposes, alternate dimensions satisfying the other provisions of the standards publication may be capable of otherwise equivalent performance.

(NEMA Policy Memorandum 84-2, dated June 7, 1984)

Classes of Standards

National Electrical Manufacturers Association Standards are of two classes:

1. NEMA Standard, which relates to a product commercially standardized and subject to repetitive manufacture, which standard has been approved by at least 90 percent of the members of the Subdivision eligible to vote thereon;
2. Suggested Standard for Future Design, which may not have been regularly applied to a commercial product, but which suggests a sound engineering approach to future development, which standard has been approved by at least two-thirds of the members of the Subdivision eligible to vote thereon.

(Bylaw—Art. V, Sec. 2, Subsection B)

Authorized Engineering Information

Authorized Engineering Information consists of explanatory data and other engineering information of an informative character not falling within the classification of NEMA Standard or Suggested Standard for Future Design.

(Bylaw—Art. V, Sec. 6, 1st Sentence)

Official Standards Proposal

An Official Standards Proposal is an official draft of a proposed standard which is formally recommended to an outside organization(s) for consideration, comment and/or approval.

(Bylaw—Art. V, Sec. 4, Subsection A)

Identification of Status

Standards in NEMA Standards Publications are identified in the foreword or following each standard as "NEMA Standard" or "Suggested Standard for Future Design." These indicate the status of the standard. These words are followed by a date which indicates when the standard was adopted in its present form by the Association.

The material identified as "Authorized Engineering Information" and "Official Standards Proposal" is similarly

Copyright National Electrical Manufacturers Association
Provided by IHS under license with NEMA
No reproduction or networking permitted without license from IHS
Not for Resale

X-RAY IMAGING PRODUCTS SECTION
OF THE
NATIONAL ELECTRICAL MANUFACTURERS ASSOCIATION

MEMBER COMPANIES

ADAC Laboratories
Milpitas, CA 95035

Advanced Instrument Development, Inc.
Melrose Park, IL 60160

Belmont Equipment Corp.
Somerset, NJ 08873

Bennett X-Ray Corp.
Copiague, NY 11726

Canon U.S.A., Inc.
Lake Success, NY 11042-9979

Capintec, Inc.
Pittsburgh, PA 15238

Continental X-Ray Corp.
Broadview, IL 60153

Dimensional Medicine, Inc.
Minnitonka, MN 55343

Dornier Medical Systems, Inc.
Marietta, GA 30067

Eastman Kodak Co.
Kodak Apparatus Div.
Rochester, NY 14650

EIMAC
Div. of Varian
Salt Lake City, UT 84104

Elema-Schonander, Inc.
Schaumburg, IL 60173-3887

Elscint, Inc.
Boston, MA 02215

Eureka X-Ray Tube Co.
Chicago, IL 60641

Fischer Imaging Corp.
Denver, CO 80241

Gammex, Inc.
Milwaukee, WI 53226

General Electric Co.
Medical Systems Group
Milwaukee, WI 53201

Hewlett-Packard Co.
Medical Products Group
McMinnville, OR 97128

Imatron, Inc.
South San Francisco, CA 94080

Keystone X-Ray, Inc.
Neptune Township, NJ 07753

Liebel Flarsheim Co.
Cincinnati, OH 45215

Lixi, Inc.
Downers Grove, IL 60515

The Machlett Laboratories, Inc.
Stamford, CT 06907

Medicor USA Ltd.
Columbus, OH 43212

MEICOR
Pleasanton, CA 94566

J. Morita Dental Corp.
of America
Culver City, CA 90230

Nuclear Associates
Div. of Victoreen, Inc.
Carle Place, NY 11514

Oldelft Corp. of America
Fairfax, VA 22031

Philips Medical Systems, Inc.
Shelton, CT 06484

Picker International, Inc.
Highland Heights, OH 44143

Siemens Medical Systems, Inc.
Iselin, NJ 08830

Thomson-CGR Medical Corp.
Columbia, MD 21046

Thomson-CSF Electron Tubes
Dover, NJ 07801

3 M
Imaging Systems Div.
St. Paul, MN 55144

Toshiba Medical Systems
Tustin, CA 92680

Transworld X-Ray Corp.
Charlotte, NC 28224

Universal/Allied Imaging, Inc.
Chicago, IL 60651

Xerox Medical Systems
Pasadena, CA 91107

XRE Corp.
Littleton, MA 01460

Copyright National Electrical Manufacturers Association
Provided by IHS under license with NEMA
No reproduction or networking permitted without license from IHS
Not for Resale