NOTICE OF ADOPTION

ADOPTION NOTICE 1
24 January 1992 for
NEMA WD 6-1988
May 4, 1989

NEMA WD 6-1988 was adopted on 24 January 1992 and is approved for use by the Department of Defense (DoD). The National Electrical Manufacturers Association has furnished the clearance required by existing regulations. Copies of the document are stocked at the Standardization Documents Order Desk, Bldg. 4D, 700 Robbins Avenue, Philadelphia, PA 19111-5094, for issue to DoD activities only. All other requestors must obtain copies from:

National Electrical Manufacturers Association
2101 L Street, N.W.
Washington, DC 20037

Title of Document: Wiring Devices - Dimensional Requirements

Date of Specific Issue Adopted: May 4, 1989

Releasing Non-Government Standards Body: NEMA

Custodian:
Navy - YD

Military Coordinating Activity:
Navy - YD

(Project 5935-N417)

FSC 5935

DISTRIBUTION STATEMENT A. Approved for public release; distribution is unlimited.

Copyright National Electrical Manufacturers Association
Provided by IHS under license with NEMA
No reproduction or networking permitted without license from IHS
Not for Resale

STD.NEMA WD 6-ENGL 1997 6470247 0514500 TT2

NEMA STANDARDS PUBLICATION

ANSI/NEMA WD 6

WIRING DEVICES — DIMENSIONAL SPECIFICATIONS



NATIONAL ELECTRICAL MANUFACTURERS ASSOCIATION

Copyright National Electrical Manufacturers Association
Provided by IHS under license with NEMA
No reproduction or networking permitted without license from IHS

Not for Resale

STD.NEMA WD 6-ENGL 1997 ■ 6470247 0514501 939 ■

American National Standard

Approved by ANSI
(American National Standards Institute)
on September 22, 1997

NEMA
Setting Standards for Excellence

NEMA Standards Publication No. ANSI/NEMA WD 6-1997

WIRING DEVICES – DIMENSIONAL SPECIFICATIONS

Published by:

National Electrical Manufacturers Association
1300 North 17th Street, Suite 1847
Rosslyn, VA 22209

© Copyright 1998 by the National Electrical Manufacturers Association. All rights including translation into other languages, reserved under the Universal Copyright Convention, the Berne Convention for the Protection of Literary and Artistic Works, and the International and Pan American Copyright Conventions.

Copyright National Electrical Manufacturers Association
Provided by IHS under license with NEMA
No reproduction or networking permitted without license from IHS
Not for Resale

TABLE OF CONTENTS

Page No.

FOREWORD vii

SCOPE viii

INTRODUCTION ix

WALLPLATE DIMENSIONS 1

WALLPLATES FOR USE ON 347 SWITCH DEVICES 2

MOUNTING AND CUT-OUT DIMENSIONS 3

WALLPLATE FOR ROUND FACE DEVICES 5

WALLPLATE FOR TELEPHONE DEVICES 6

WALLPLATE FOR TOGGLE SWITCH DEVICES 7

YOKE DIMENSIONS OF RECEPTACLES AND SWITCHES FOR BOX MOUNTING 8

YOKE DIMENSIONS FOR 2-GANG RECEPTACLE MOUNTING 9

DIMENSIONS FOR FLUSH MOUNT DUPLEX DEVICES 10

DIMENSIONS FOR FLUSH MOUNT RECTANGULAR FACE DEVICES 11

DIMENSIONS FOR RECTANGULAR FACE DEVICES WITH PROTRUDING ACTUATORS 12

DIMENSIONS FOR ROUND AND RECTANGULAR FACE SINGLE DEVICES 13

DIMENSIONS FOR INTERCHANGEABLE TYPE: SINGLE, DUPLEX, AND TRIPLEX DEVICES 14

WIRING DEVICE MAXIMUM ENVELOPE DIMENSIONS 15

DIMENSIONS FOR FLANGED INLETS AND CONNECTOR BODIES 16

FLAT BLADE HOLE LOCATIONS 17

CONFIGURATIONS FOR NON-LOCKING PLUGS AND RECEPTACLES

NEMA 1-15R & 1-15P 18

NEMA 1-20P 19

NEMA 1-30P 20

NEMA 2-15P 21

NEMA 2-20R & 2-20P 22

NEMA 2-30R & 2-30P 23

NEMA 5-15R & 5-15P 24

Copyright National Electrical Manufacturers Association
Provided by IHS under license with NEMA
No reproduction or networking permitted without license from IHS

Not for Resale

NEMA 5-20R & 5-20P..... 25

NEMA 5-20R ALTERNATE CONSTRUCTION - CANADA..... 26

NEMA 5-30R & 5-30P..... 27

NEMA 5-50R & 5-50P..... 28

NEMA 6-15R & 6-15P..... 29

NEMA 6-20R & 6-20P..... 30

NEMA 6-20R ALTERNATE CONSTRUCTION - CANADA..... 31

NEMA 6-30R & 6-30P..... 32

NEMA 6-50R & 6-50P..... 33

NEMA 7-15R & 7-15P..... 34

NEMA 7-20R & 7-20P..... 35

NEMA 7-30R & 7-30P..... 36

NEMA 7-50R & 7-50P..... 37

NEMA 24-15R & 24-15P..... 38

NEMA 24-20R & 24-20P..... 39

NEMA 24-30R & 24-30P..... 40

NEMA 24-50R & 24-50P..... 41

NEMA 10-20R & 10-20P..... 42

NEMA 10-30R & 10-30P..... 43

NEMA 10-50R & 10-50P..... 44

NEMA 11-15R & 11-15P..... 45

NEMA 11-20R & 11-20P..... 46

NEMA 11-30R & 11-30P..... 47

NEMA 11-50R & 11-50P..... 48

NEMA 14-15R & 14-15P..... 49

NEMA 14-20R & 14-20P..... 50

NEMA 14-30R & 14-30P..... 51

NEMA 14-50R & 14-50P..... 52

NEMA 14-60R & 14-60P..... 53

Copyright National Electrical Manufacturers Association
Provided by IHS under license with NEMA
No reproduction or networking permitted without license from IHS

Not for Resale

NEMA 15-15R & 15-15P 54

NEMA 15-20R & 15-20P 55

NEMA 15-30R & 15-30P 56

NEMA 15-50R & 15-50P 57

NEMA 15-60R & 15-60P 58

NEMA 18-15R & 18-15P 59

NEMA 18-20R & 18-20P 60

NEMA 18-30R & 18-30P 61

NEMA 18-50R & 18-50P 62

NEMA 18-60R & 18-60P 63

CONFIGURATIONS FOR LOCKING PLUGS AND RECEPTACLES

NEMA L1-15R & L1-15P 64

NEMA L2-20R & L2-20P 65

NEMA L5-15R & L5-15P 66

NEMA L5-20R & L5-20P 67

NEMA L5-30R & L5-30P 68

NEMA L5-50R & L5-50P 69

NEMA L5-60R & L5-60P 70

NEMA L6-15R & L6-15P 71

NEMA L6-20R & L6-20P 72

NEMA L6-30R & L6-30P 73

NEMA L6-50R & L6-50P 74

NEMA L6-60R & L6-60P 75

NEMA L7-15R & L7-15P 76

NEMA L7-20R & L7-20P 77

NEMA L7-30R & L7-30P 78

NEMA L7-50R & L7-50P 79

NEMA L7-60R & L7-60P 80

NEMA L8-20R & L8-20P 81

NEMA L8-30R & L8-30P 82

Copyright National Electrical Manufacturers Association
Provided by IHS under license with NEMA
No reproduction or networking permitted without license from IHS

Not for Resale

NEMA L8-50R & L8-50P 83

NEMA L8-60R & L8-60P 84

NEMA L9-20R & L9-20P 85

NEMA L9-30R & L9-30P 86

NEMA L9-50R & L9-50P 87

NEMA L9-60R & L9-60P 88

NEMA L10-20R & L10-20P 89

NEMA L10-30R & L10-30P 90

NEMA L11-15R & L11-15P 91

NEMA L11-20R & L11-20P 92

NEMA L11-30R & L11-30P 93

NEMA L12-20R & L12-20P 94

NEMA L12-30R & L12-30P 95

NEMA L13-30R & L13-30P 96

NEMA L14-20R & L14-20P 97

NEMA L14-30R & L14-30P 98

NEMA L14-50R & L14-50P 99

NEMA L14-60R & L14-60P 100

NEMA L15-20R &L15-20P 101

NEMA L15-30R & L15-30P 102

NEMA L15-50R & L15-50P 103

NEMA L15-60R & L15-60P 104

NEMA L16-20R & L16-20P 105

NEMA L16-30R & L16-30P 106

NEMA L16-50R & L16-50P 107

NEMA L16-60R & L16-60P 108

NEMA L17-30R & L17-30P 109

NEMA L17-50R & L17-50P 110

NEMA L17-60R & L17-60P 111

Copyright National Electrical Manufacturers Association
Provided by IHS under license with NEMA
No reproduction or networking permitted without license from IHS

Not for Resale

NEMA L18-20R & L18-20P 112

NEMA L18-30R & L18-30P 113

NEMA L19-20R & L19-20P 114

NEMA L19-30R & L19-30P 115

NEMA L20-20R & L20-20P 116

NEMA L20-30R & L20-30P 117

NEMA L21-20R & L21-20P 118

NEMA L21-30R & L21-30P 119

NEMA L21-50R & L21-50P 120

NEMA L21-60R & L21-60P 121

NEMA L22-20R & L22-20P 122

NEMA L22-30R & L22-30P 123

NEMA L22-50R & L22-50P 124

NEMA L22-60R & L22-60P 125

NEMA L23-20R & L23-20P 126

NEMA L23-30R & L23-30P 127

NEMA L23-50R & L23-50P 128

NEMA L23-60R & L23-60P 129

NEMA L24-20R & L24-20P 130

CONFIGURATIONS FOR SPECIFIC PURPOSE PLUGS AND RECEPTACLES

NEMA ML-1-15R & ML-1-15P Midget Locking Type Receptacle and Plug 131

NEMA ML-2-15R & ML-2-15P Midget Locking Type Receptacle and Plug 132

NEMA ML-3-15R & ML-3-15P Midget Locking Type Receptacle and Plug 133

NEMA FSL 1 Locking Type Receptacle and Plug 134

NEMA FSL 2 Locking Type Receptacle and Plug 135

NEMA FSL 3 Locking Type Receptacle and Plug 136

NEMA FSL 4 Locking Type Receptacle and Plug 137

NEMA SS1-50R & SS1-50P Marine Ship-to-Shore Locking Type Receptacle and Plug 138

NEMA SS2-50R & SS2-50P Marine Ship-to-Shore Locking Type Receptacle and Plug 139

NEMA TT Travel Trailer Use Receptacle and Plug 140

Copyright National Electrical Manufacturers Association
Provided by IHS under license with NEMA
No reproduction or networking permitted without license from IHS

Not for Resale

CHART FOR NEMA CONFIGURATIONS FOR SPECIFIC PURPOSE PLUGS AND RECEPTACLES 141

CHART FOR NEMA CONFIGURATIONS FOR STRAIGHT BLADE PLUGS AND RECEPTACLES 142

CHART FOR NEMA CONFIGURATIONS FOR LOCKING PLUGS AND RECEPTACLES 143

1. **Pdf**—suitable for viewing with Adobe/Acrobat reader
   (Adobe Reader is supported for the following systems: UNIX, OS2, MAC, WIN)

   The Adobe Reader file contains links to the drawings from the Table of Contents as well as from the configuration charts on pages 141–143.

2. **Dxf**—importable into most CAD systems
3. **Igs**—importable into most CAD systems

Copyright National Electrical Manufacturers Association
Provided by IHS under license with NEMA
No reproduction or networking permitted without license from IHS

Not for Resale

FOREWORD

The purpose of this standard is to present the dimensional specifications of wiring devices in order to assist the user in selecting and obtaining the proper product for a particular need and to minimize the possibility of unsafe interchangeability between configurations.

In the preparation of this Standards Publication, input of users and other interested parties has been sought and evaluated. User input was also formally sought by the canvass procedures of the American National Standards Institute.

This standard is periodically reviewed by the Wiring Device Section of NEMA for any revisions necessary to keep up-to-date with advancing technology. Proposed or recommended revisions should be submitted to:

Vice President, Engineering
National Electrical Manufacturers Association
1300 North 17th Street, Suite 1847
Rosslyn, Virginia 22209

Publication No. ANSI/NEMA WD 6-1997 revises and supersedes NEMA Standards Publication ANSI/NEMA WD 6-1988, which in turn revised and superseded ANSI Standard C73.

This Standards Publication was developed by the Wiring Devices Section. Section approval of the standard does not necessarily imply that all section members voted for its approval or participated in its development. At the time it was approved, the Section was composed of the following members:

AMP Incorporated—Harrisburg, PA
Arrow Hart Wiring Devices—Syracuse, NY
Bryant Electric, Inc.—Milford, CT
Daniel Woodhead Company—Northbrook, IL
Eagle Electric Manufacturing Co.—Long Island City, NY
Ericson Manufacturing Co., Inc.—Willoughby, OH
GE Wiring Devices—Warwick, RI
Hubbell Wiring Devices - Kellems—Bridgeport, CT
Lamson & Sessions—Cleveland, OH
Leviton Manufacturing Company—Little Neck, NY
Lutron Electronics Company, Inc.—Coopersburg, PA
Marinco/Marine Industries Co.—Napa, CA
McGill Electrical Product Group—Valparaiso, IN
MYTECH Corporation—Austin, TX
Pass & Seymour/Legrand—Syracuse, NY
Steel City—Memphis, TN
UNENCO—Alameda, CA
The Wiremold Company—West Hartford, CT

Copyright National Electrical Manufacturers Association
Provided by IHS under license with NEMA
No reproduction or networking permitted without license from IHS
Not for Resale

SCOPE

These standards cover dimension requirements for plugs and receptacles rated up to 60 ampere and 600 volts. They also include dimensions for wallplates.

These standards do not cover other requirements since these are included in NEMA Standards Publication No. WD 1, *General Requirements for Wiring Devices.*

Copyright National Electrical Manufacturers Association
Provided by IHS under license with NEMA
No reproduction or networking permitted without license from IHS

Not for Resale

INTRODUCTION

Throughout this publication the following shall apply:

1. All dimensions are in inches, unless otherwise specified.
2. Decimal dimensions without tolerances shall be subject to a ± 0.005 inch tolerance.
3. Angular dimensions without tolerances shall be subject to a ± 1 degree tolerance.
4. "G" denotes equipment ground.
5. "W" denotes system ground.
6. Leading edges of plug blades shall be free of burrs and sharp edges.
7. All slots and slot tolerances are symmetrically located about center lines.
8. Female contacts associated with plug blades that are 0.125 minimum longer than other blades, are engaged prior to the other female contacts.
9. Configurations utilized on alternating current systems are limited to 50 or 60 Hertz, unless otherwise specified.
10. Dimensions shown in these standards are for the purpose of interchangeability and do not preclude other designs.
11. The electrical ratings of the configurations in these standards are AC and DC, unless specifically stated 'AC' or 'DC.'

Copyright National Electrical Manufacturers Association
Provided by IHS under license with NEMA
No reproduction or networking permitted without license from IHS

Not for Resale

Copyright National Electrical Manufacturers Association
Provided by IHS under license with NEMA
No reproduction or networking permitted without license from IHS

Not for Resale

DIMENSIONAL SPECIFICATIONS FOR WALLPLATES

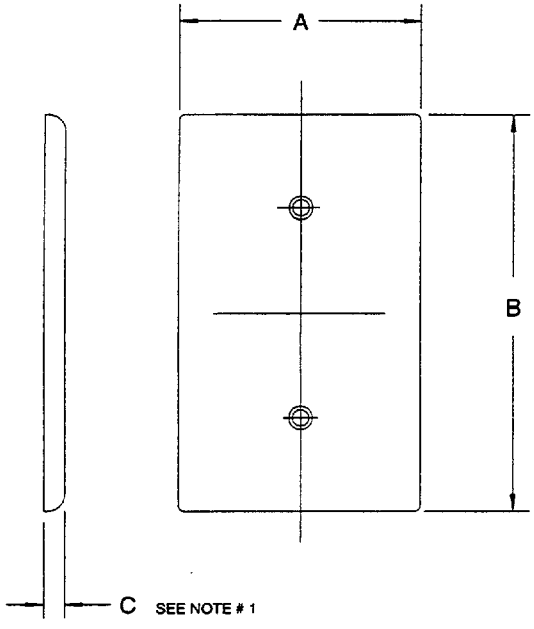

SINGLE-GANG WALLPLATE
OVERALL DIMENSIONS

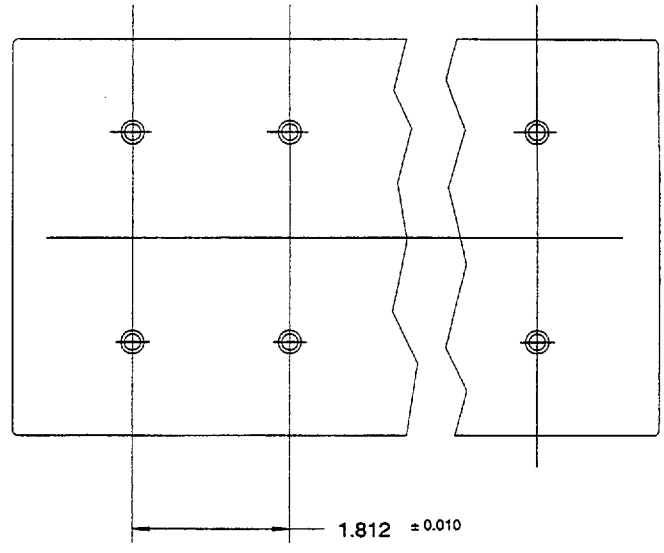

MULTIGANG WALLPLATE HORIZONTAL HOLE SPACING.
FOR VERTICAL HOLE SPACING SEE PAGE 3.

REFERENCE	MATERIAL	STANDARD DIMENSIONS	
		MIN	MAX
A	ALL	2.740	—
B	ALL	4.490	—

NOTES:

1- THE DEPTH IS DEFINED IN ACCORDANCE TO THE APPLICABLE INSTALLATION CODE BY THE AUTHORITY HAVING JURISDICTION. DECORATIVE CONTOURS SHOULD NOT PRECLUDE THE FLUSH SEATING OF A PLUG INTO A RECEPTACLE.

2- PLATE MOUNTING HOLES TO BE COUNTER-SUNK FOR # 6-32 UNC, OVAL HEAD MACHINE SCREW.

3- RIBS ARE OPTIONAL ON NON-METALLIC PLATES. HEIGHT, WIDTH, AND LOCATION OF RIBS SHALL CLEAR DEVICE FOR WHICH THE PLATE IS DESIGNED OR INTENDED FOR USE.

Copyright National Electrical Manufacturers Association
Provided by IHS under license with NEMA
No reproduction or networking permitted without license from IHS
Not for Resale

DIMENSIONAL SPECIFICATIONS FOR WALLPLATES USED ON 347 V SWITCH DEVICES

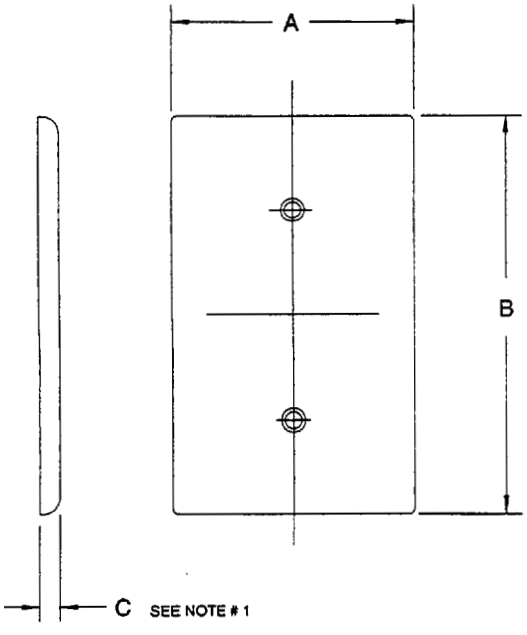

SINGLE-GANG WALLPLATE
OVERALL DIMENSIONS

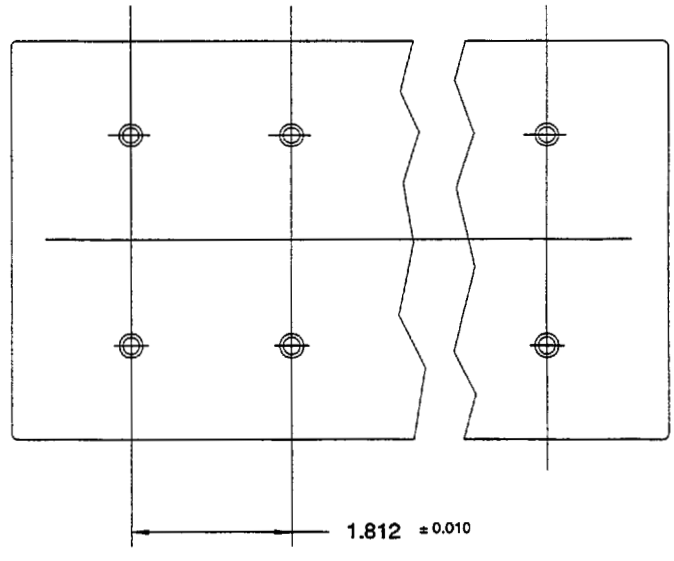

MULTIGANG WALLPLATE HORIZONTAL HOLE SPACING.
FOR VERTICAL HOLE SPACING SEE PAGE 3.

REFERENCE	MATERIAL	STANDARD DIMENSIONS	
		MIN	MAX
A	ALL	3.120	—
B	ALL	4.870	—

NOTES:

1- THE DEPTH IS DEFINED IN ACCORDANCE TO THE APPLICABLE INSTALLATION CODE BY THE AUTHORITY HAVING JURISDICTION. DECORATIVE CONTOURS SHOULD NOT PRECLUDE THE FLUSH SEATING OF A PLUG INTO A RECEPTACLE.

2- PLATE MOUNTING HOLES TO BE COUNTER-SUNK FOR # 6-32 UNC, OVAL HEAD MACHINE SCREW.

3- RIBS ARE OPTIONAL ON NON-METALLIC PLATES. HEIGHT, WIDTH, AND LOCATION OF RIBS SHALL CLEAR DEVICE FOR WHICH THE PLATE IS DESIGNED OR INTENDED FOR USE.

Copyright National Electrical Manufacturers Association
Provided by IHS under license with NEMA
No reproduction or networking permitted without license from IHS

Not for Resale

MOUNTING AND CUT-OUT DIMENSIONS

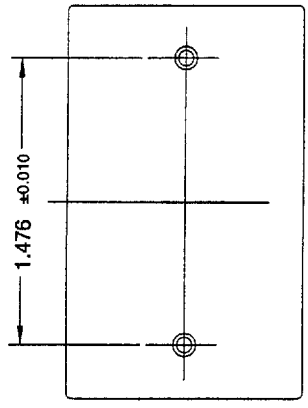

BOX MOUNT BLANK PLATE
(SEE NOTE # 3)

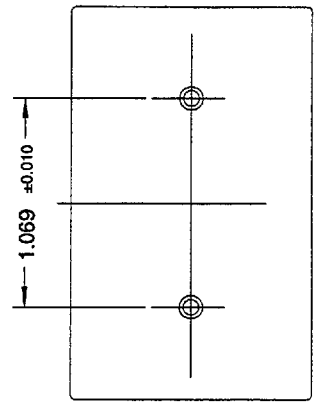

YOKE MOUNT BLANK PLATE
(SEE NOTE # 3)

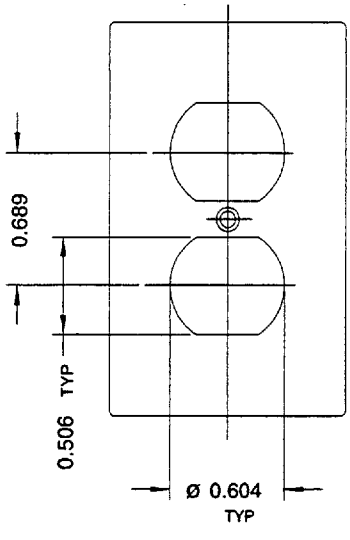

DUPLEX DEVICE

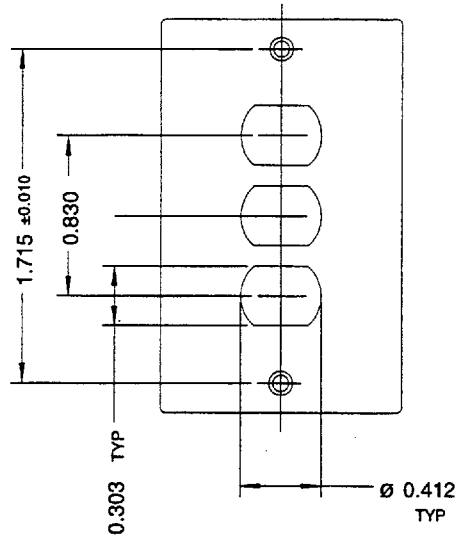

INTERCHANGEABLE
DEVICE

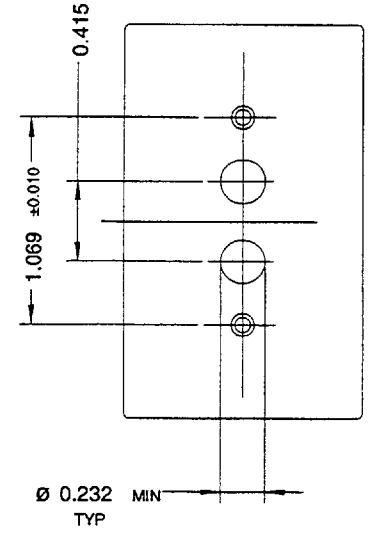

TWO BUTTON
PUSH SWITCH

NOTES:

1- PLATE MOUNTING HOLES TO BE COUNTER-SUNK FOR # 6-32 UNC, OVAL HEAD MACHINE SCREW.

2- RIBS ARE OPTIONAL ON NON-METALLIC PLATES. HEIGHT, WIDTH, AND LOCATION OF RIBS SHALL CLEAR DEVICE FOR WHICH THE PLATE IS DESIGNED OR INTENDED FOR USE.

3- BLANK PLATES MAY BE PROVIDED WITH KNOCK-OUTS.

Copyright National Electrical Manufacturers Association
Provided by IHS under license with NEMA
No reproduction or networking permitted without license from IHS

Not for Resale

WALLPLATE DIMENSIONS
FOR ROUND FACE DEVICES

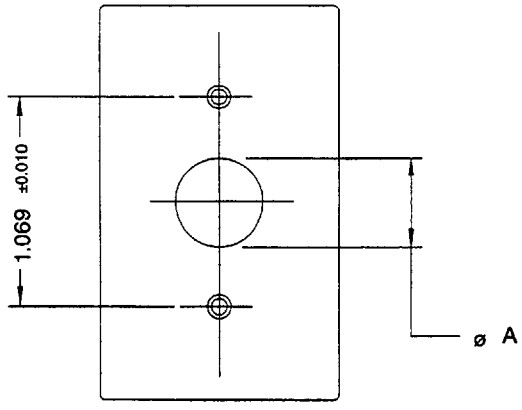

NOMINAL DIAMETER	DEVICE FACE DIAMETER		WALLPLATE OPENING (ø A)	
	MIN	MAX	MIN	MAX
1	0.968	1.000	1.009	1.025
1 1/8	1.093	1.125	1.134	1.150
1 1/4	1.205	1.235	1.245	1.263
1 3/8	1.360	1.390	1.396	1.414
1 9/16	1.550	1.580	1.586	1.604
1 5/8	1.610	1.640	1.646	1.664
1 11/16	1.675	1.705	1.711	1.729
2 1/8	2.093	2.125	2.140	2.156
2 1/4	2.218	2.250	2.265 *	2.281 *
2 7/16	2.405	2.437	2.452 *	2.468 *

NOTES:

1- PLATE MOUNTING HOLES TO BE COUNTER-SUNK FOR # 6-32 UNC, OVAL HEAD MACHINE SCREW.

2- RIBS ARE OPTIONAL ON NON-METALLIC PLATES. HEIGHT, WIDTH, AND LOCATION OF RIBS SHALL CLEAR DEVICE FOR WHICH THE PLATE IS DESIGNED OR INTENDED FOR USE.

3- DIMENSIONS WITH ASTERISK (*) APPLY TO MULTIGANG PLATES ONLY.

Copyright National Electrical Manufacturers Association
Provided by IHS under license with NEMA
No reproduction or networking permitted without license from IHS

Not for Resale

WALLPLATE DIMENSIONS
FOR RECTANGULAR FACE DEVICES

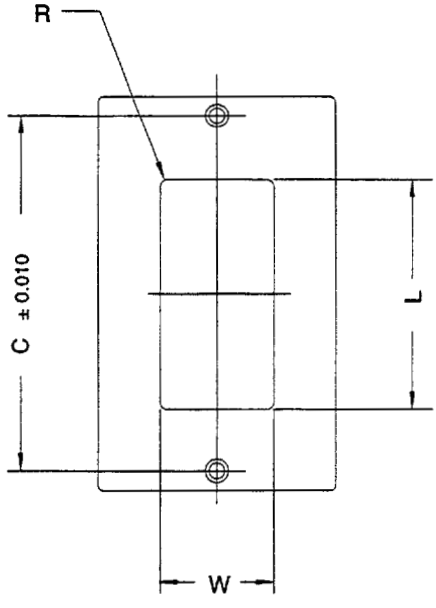

W MIN	L MIN	R	C	APPLICATION (DEVICE FACE)
1.310	2.630	0.079	4.062	1.300 MAX W x 2.620 MAX L (347 V SWITCH)
1.310	2.630	0.094	3.812	1.300 MAX W x 2.620 MAX L

NOTES:

1- PLATE MOUNTING HOLES TO BE COUNTER-SUNK FOR # 6-32 UNC, OVAL HEAD MACHINE SCREW.

2- RIBS ARE OPTIONAL ON NON-METALLIC PLATES. HEIGHT, WIDTH, AND LOCATION OF RIBS SHALL CLEAR DEVICE FOR WHICH THE PLATE IS DESIGNED OR INTENDED FOR USE.

Copyright National Electrical Manufacturers Association
Provided by IHS under license with NEMA
No reproduction or networking permitted without license from IHS

Not for Resale

STD.NEMA WD 6-ENGL 1997 ■ 6470247 0514517 2T6 ■

WALLPLATE DIMENSIONS
FOR TELEPHONE DEVICES

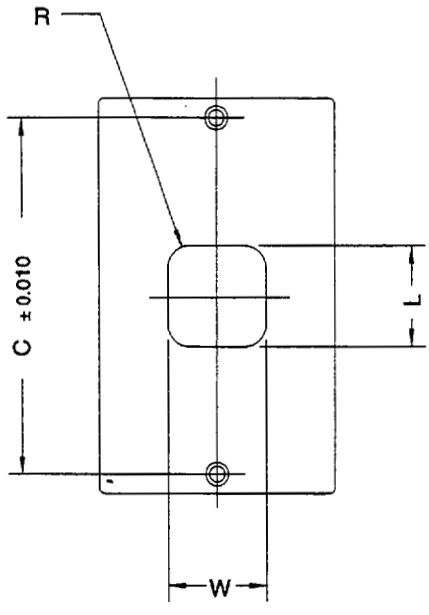

W MIN	L MIN	R	C	APPLICATION (DEVICE FACE)
1.150	1.150	0.250	2.375	1.140 MAX W x 1.140 MAX L

NOTES:

1- PLATE MOUNTING HOLES TO BE COUNTER-SUNK FOR # 6-32 UNC, OVAL HEAD MACHINE SCREW.

2- RIBS ARE OPTIONAL ON NON-METALLIC PLATES. HEIGHT, WIDTH, AND LOCATION OF RIBS SHALL CLEAR DEVICE FOR WHICH THE PLATE IS DESIGNED OR INTENDED FOR USE.

Copyright National Electrical Manufacturers Association
Provided by IHS under license with NEMA
No reproduction or networking permitted without license from IHS
Not for Resale

WALLPLATE DIMENSIONS
FOR TOGGLE SWITCH DEVICES

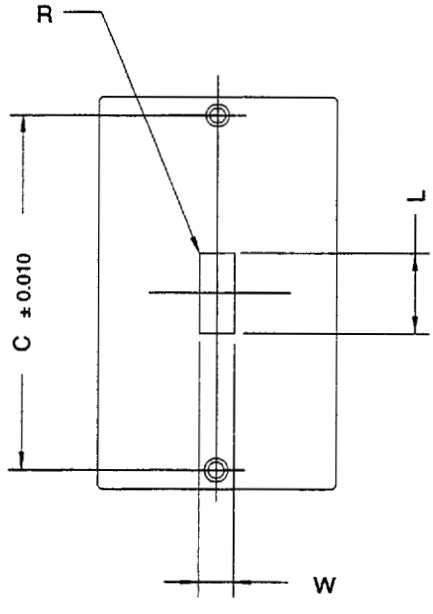

W MIN	L MIN	R	C	APPLICATION
0.401	0.925	0.000	2.375	120 V TO 600 V

NOTES:

1- PLATE MOUNTING HOLES TO BE COUNTER-SUNK FOR # 6-32 UNC, OVAL HEAD MACHINE SCREW.

2- RIBS ARE OPTIONAL ON NON-METALLIC PLATES. HEIGHT, WIDTH, AND LOCATION OF RIBS SHALL CLEAR DEVICE FOR WHICH THE PLATE IS DESIGNED OR INTENDED FOR USE.

Copyright National Electrical Manufacturers Association
Provided by IHS under license with NEMA
No reproduction or networking permitted without license from IHS
Not for Resale

STD.NEMA WD 6-ENGL 1997 ■ 6470247 0514519 079 ■

YOKE DIMENSIONS OF RECEPTACLES AND SWITCHES FOR BOX MOUNTING

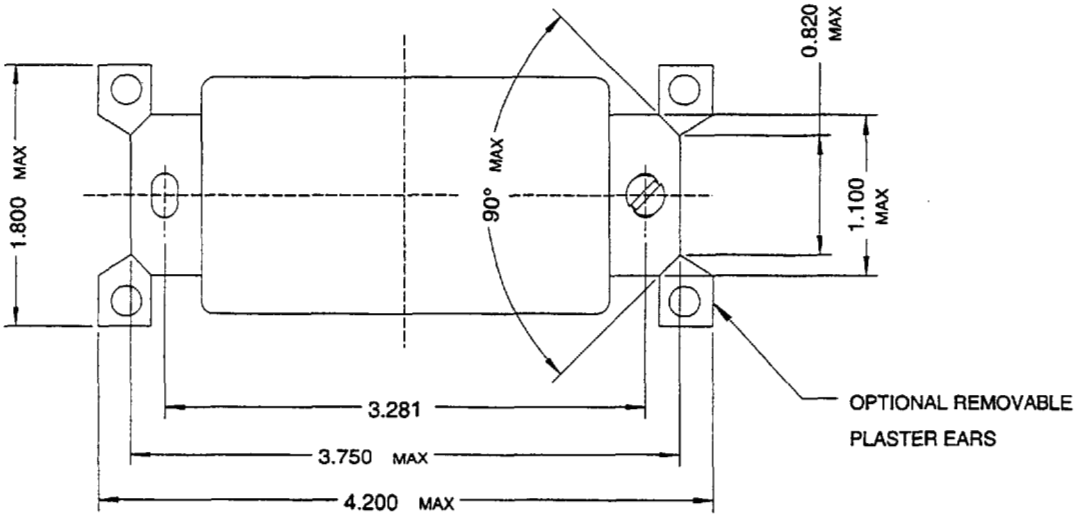

ALTERNATE YOKE CONSTRUCTION

OTHER DIMENSIONS SAME AS ABOVE

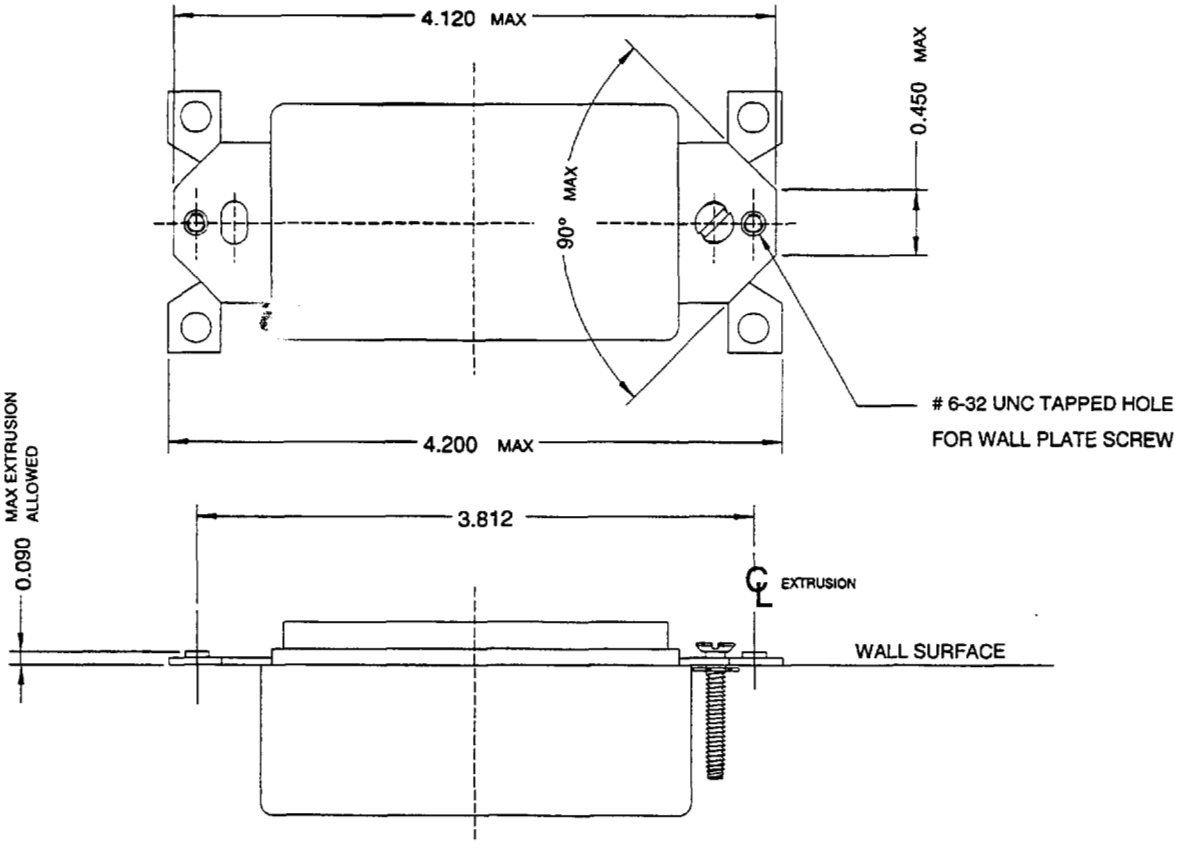

Copyright National Electrical Manufacturers Association
Provided by IHS under license with NEMA
No reproduction or networking permitted without license from IHS
Not for Resale

YOKE DIMENSIONS FOR 2 GANG RECEPTACLE MOUNTING
"OFF-CENTER FACE" TYPE

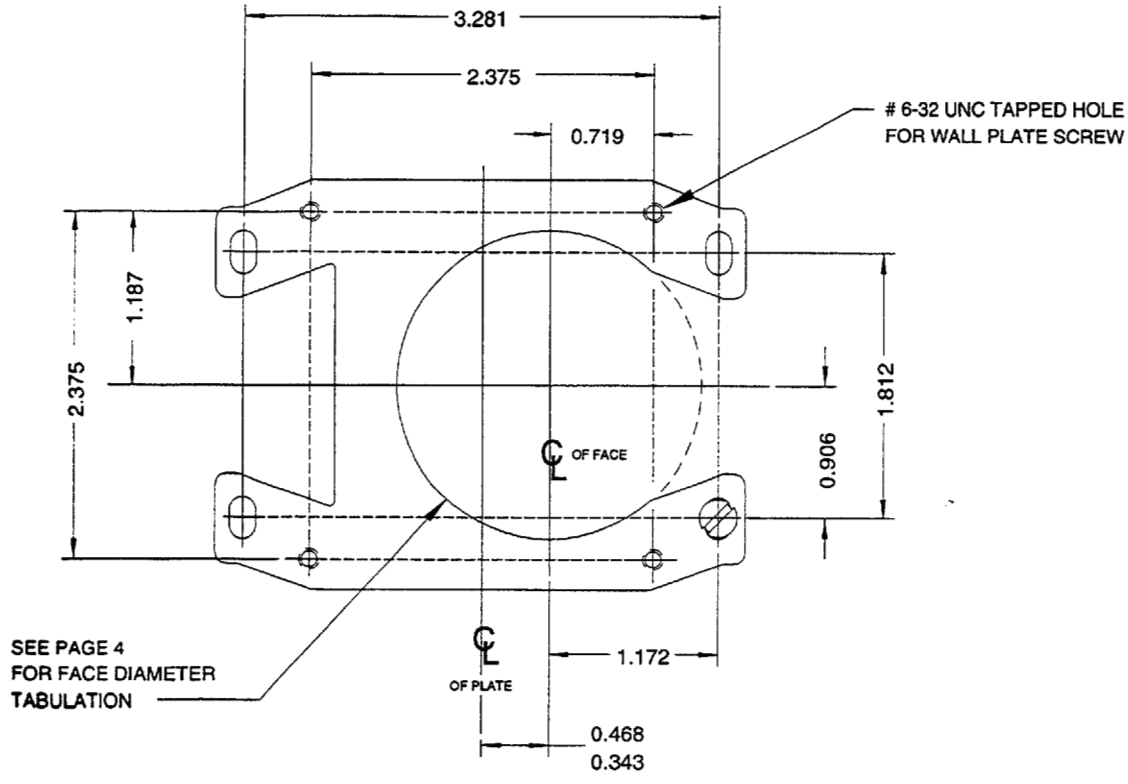

YOKE DIMENSIONS FOR 2 GANG RECEPTACLE MOUNTING
"ON-CENTER FACE" TYPE

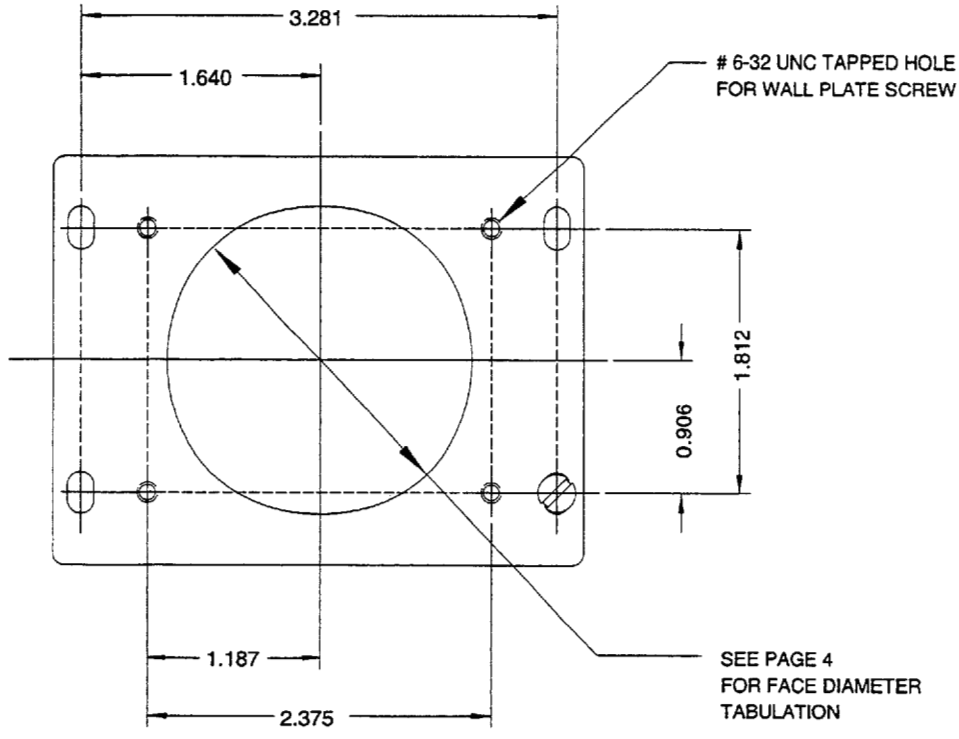

Copyright National Electrical Manufacturers Association
Provided by IHS under license with NEMA
No reproduction or networking permitted without license from IHS
Not for Resale

STD.NEMA WD 6-ENGL 1997 ■ 6470247 0514521 727 ■

DIMENSIONS FOR FLUSH MOUNT DUPLEX DEVICES

RECEPTACLES, COMBINATION SWITCHES, ETC...

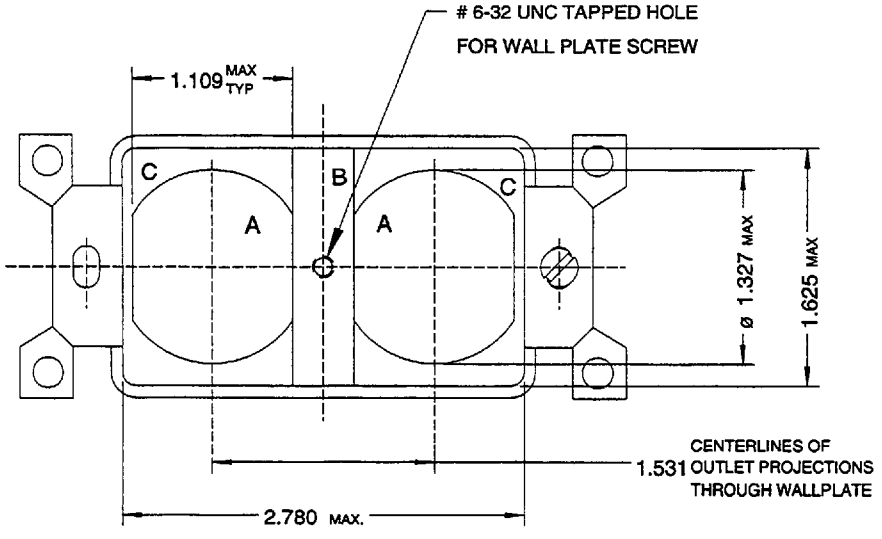

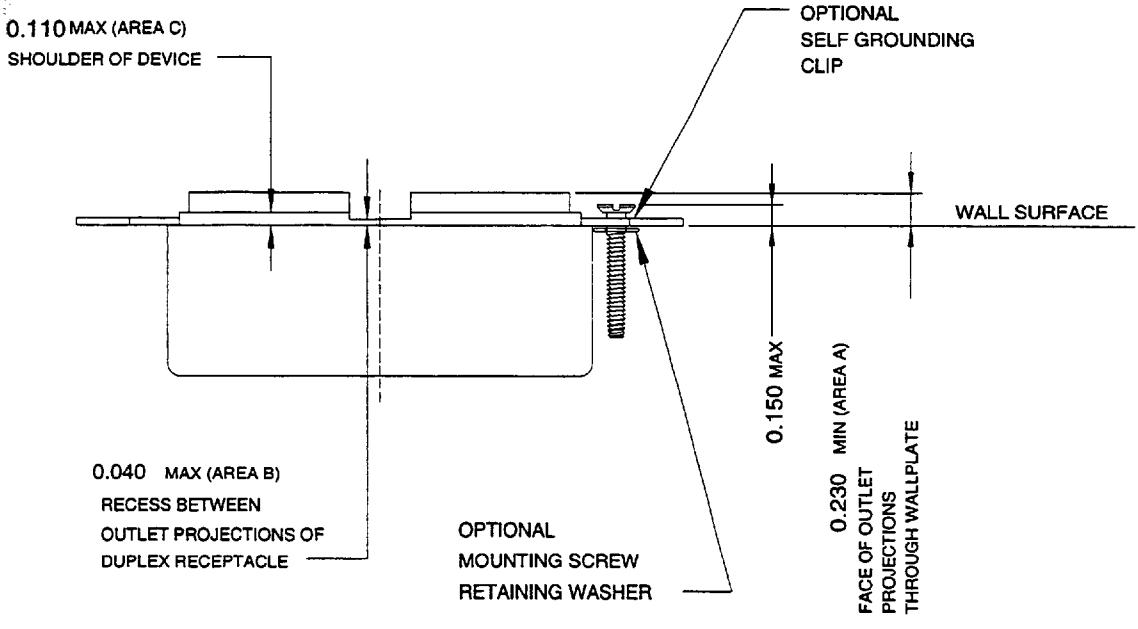

NOTES:

1. SEE PAGE 8 FOR YOKE DIMENSIONS.
2. CENTER LINE SPACING OF DUPLEX OUTLET FACE CONFIGURATIONS LISTED IN NOTE # 3 TO BE 1.531 MIN.
3. TYPICAL DUPLEX RECTANGULAR STYLE CONFIGURATIONS ARE:

   1-15, 5-15, 5-20, 6-15, 6-20, 7-15 , L1-15, L2-20, L5-15, L6-15, L7-15, L11-15

Copyright National Electrical Manufacturers Association
Provided by IHS under license with NEMA
No reproduction or networking permitted without license from IHS
Not for Resale

DIMENSIONS FOR FLUSH MOUNT RECTANGULAR FACE DEVICES

RECEPTACLES, SWITCHES, GFCI'S, DIMMERS, MOTION SENSORS, ETC...

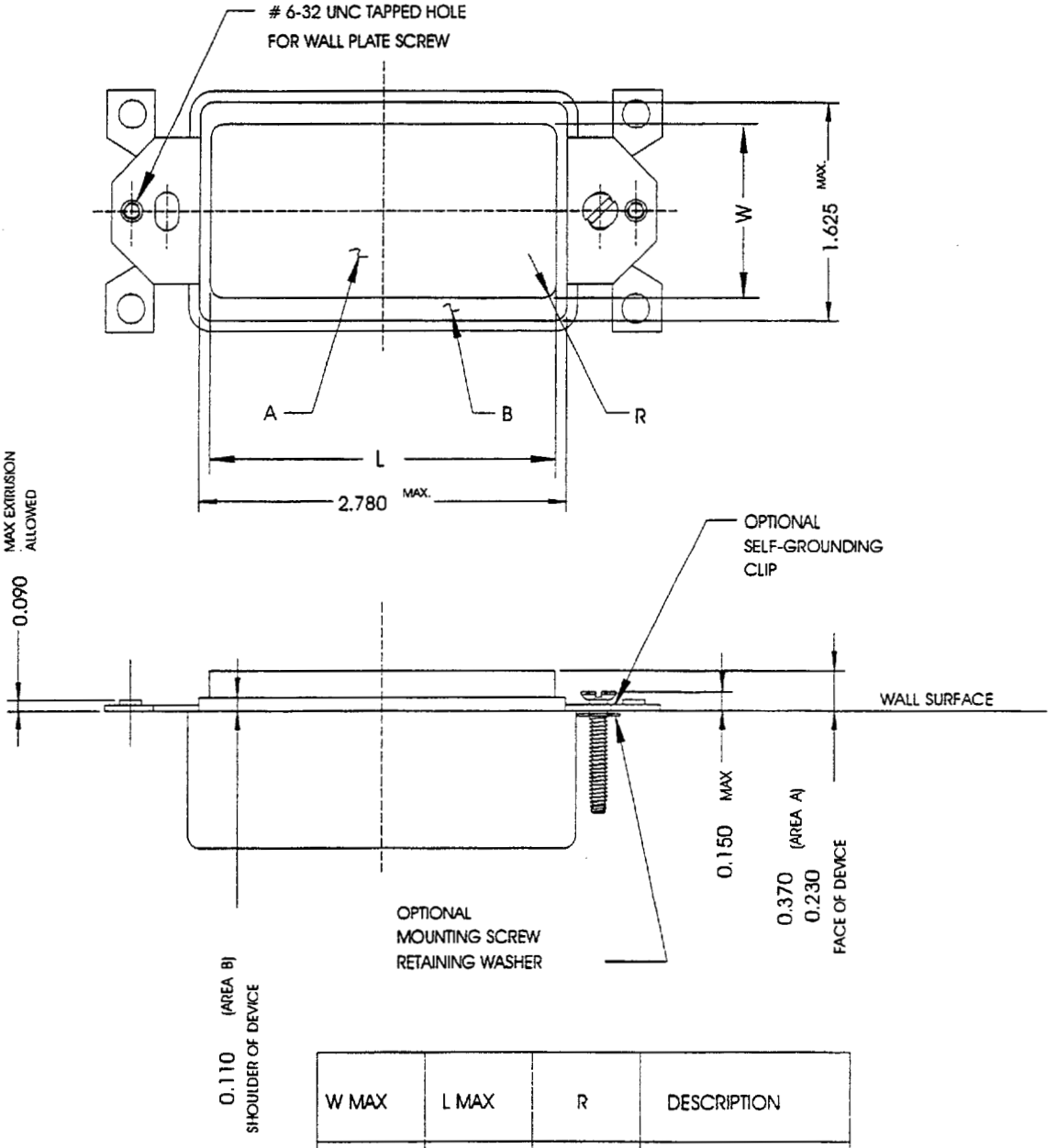

W MAX	L MAX	R	DESCRIPTION
1.300	2.620	0.094	DUPLEX DEVICE
1.060	2.880	0.062	TRIPLEX DEVICE

NOTES:

1. SEE PAGE 8 FOR YOKE DIMENSIONS.
2. CENTER LINE SPACING OF DUPLEX OUTLET FACE CONFIGURATIONS LISTED IN NOTE # 3 TO BE 1.531 MIN.
3. TYPICAL DUPLEX RECTANGULAR STYLE CONFIGURATIONS ARE:

   1-15, 5-15, 5-20, 6-15, 6-20, 7-15 , L1-15, L2-20, L5-15, L6-15, L7-15, L11-15

Copyright National Electrical Manufacturers Association
Provided by IHS under license with NEMA
No reproduction or networking permitted without license from IHS

Not for Resale

STD.NEMA WD 6-ENGL 1997 ■ 6470247 0514523 5TT ■

DIMENSIONS FOR RECTANGULAR FACE DEVICES INCORPORATING PROTRUDING ACTUATORS

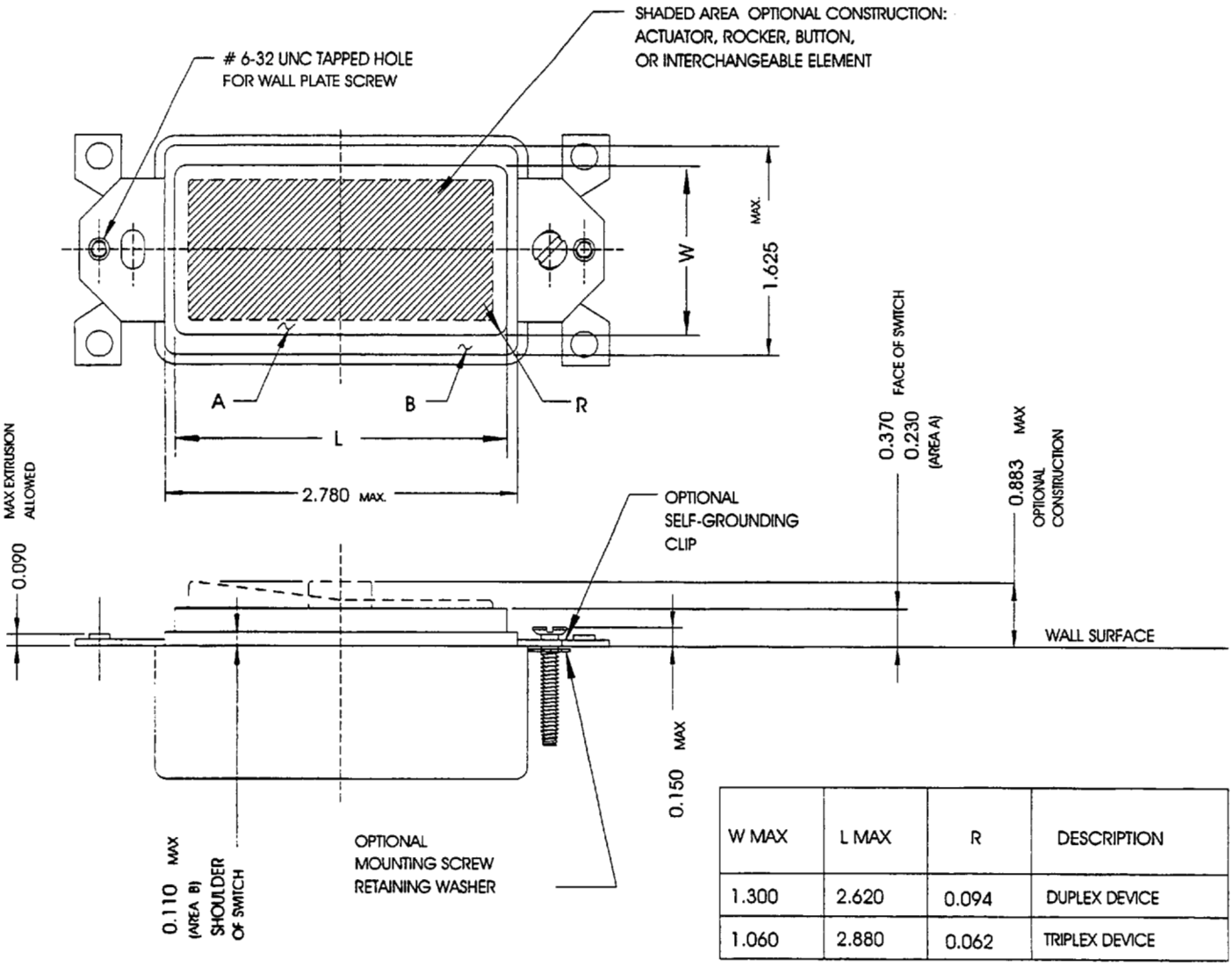

W MAX	L MAX	R	DESCRIPTION
1.300	2.620	0.094	DUPLEX DEVICE
1.060	2.880	0.062	TRIPLEX DEVICE

DIMENSIONS FOR RECTANGULAR FACE DEVICES INCORPORATING SWITCH TOGGLES

ALL OTHER DIMENSIONS NOT SHOWN, SEE ABOVE

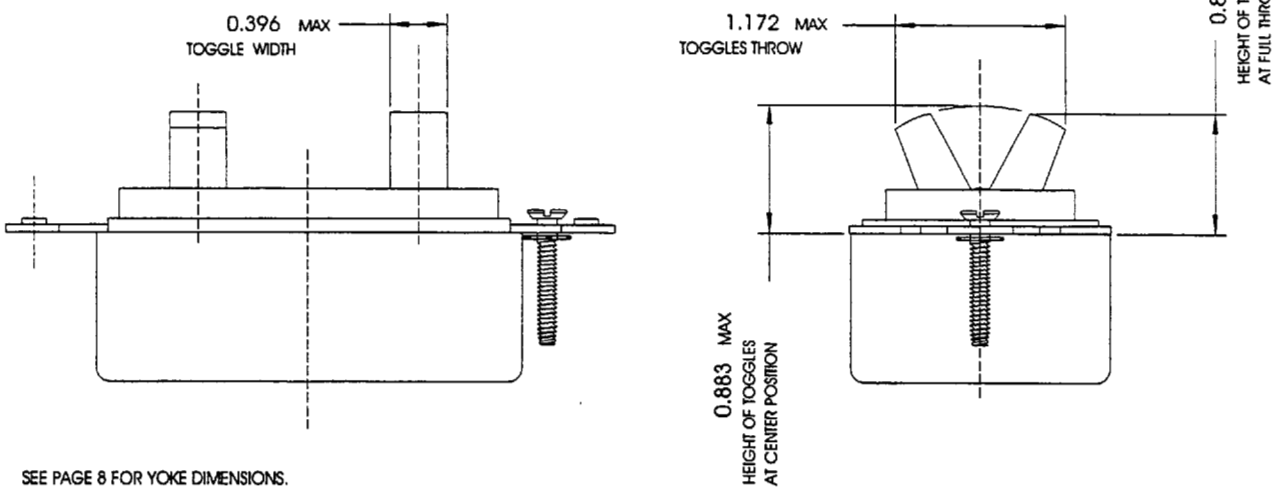

NOTE: SEE PAGE 8 FOR YOKE DIMENSIONS.

Copyright National Electrical Manufacturers Association
Provided by IHS under license with NEMA
No reproduction or networking permitted without license from IHS
Not for Resale

DIMENSIONS FOR ROUND AND RECTANGULAR FACE SINGLE DEVICES

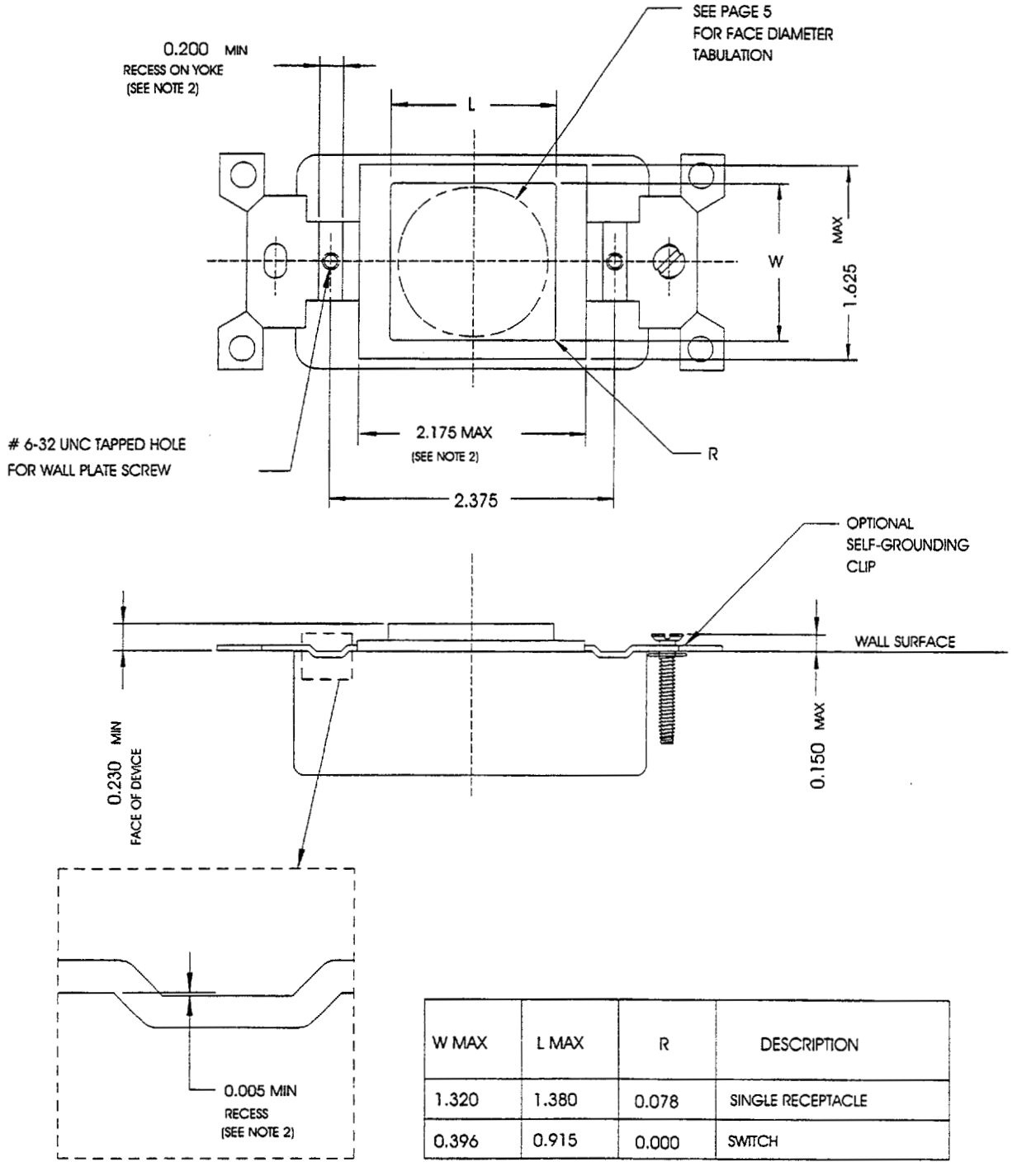

W MAX	L MAX	R	DESCRIPTION
1.320	1.380	0.078	SINGLE RECEPTACLE
0.396	0.915	0.000	SWITCH

NOTES:

1. SEE PAGE 8 FOR YOKE DIMENSIONS.
2. THIS DIMENSION IS INTENDED FOR STRAIGHT BLADE SINGLE RECEPTACLES AND SWITCHES TO CLEAR THE REINFORCING RIBS IN PLASTIC PLATES

Copyright National Electrical Manufacturers Association
Provided by IHS under license with NEMA
No reproduction or networking permitted without license from IHS
Not for Resale

STD.NEMA WD 6-ENGL 1997 ■ 6470247 0514525 372 ■

DIMENSIONS FOR INTERCHANGEABLE TYPE
SINGLE, DUPLEX, AND TRIPLEX DEVICES

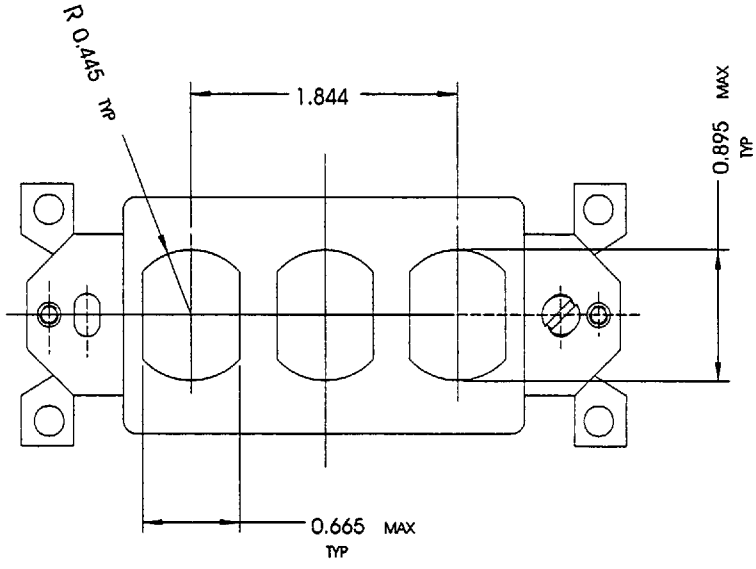

NOTES:

1- SEE PAGE 8 FOR YOKE DIMENSIONS

Copyright National Electrical Manufacturers Association
Provided by IHS under license with NEMA
No reproduction or networking permitted without license from IHS
Not for Resale

WIRING DEVICE MAXIMUM ENVELOPE DIMENSION

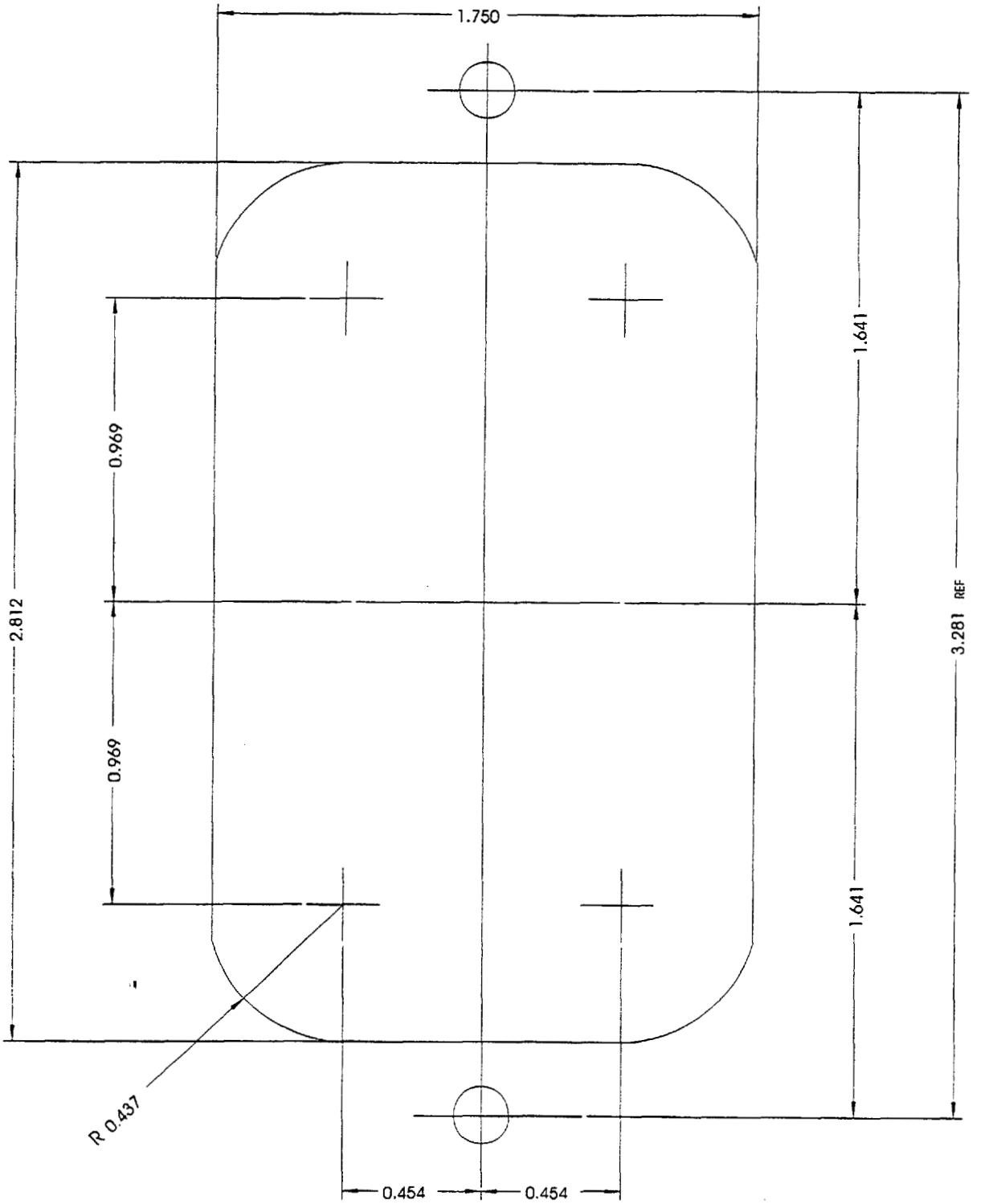

NOTES:

1- THIS STANDARD CORRESPONDS TO NEMA STANDARDS PUBLICATION OS-1 SHEET-STEEL OUTLET BOXES, DEVICE BOXES, COVERS AND BOX SUPPORTS, STANDARD FOR MINIMUM BOX/COVER FACE OPENING, AND DOES NOT ADDRESS ELECTRICAL CLEARANCES. AVAILABLE SPACE AT DEPTHS WITHIN THE BOX MAY BE FURTHER REDUCED BY ACCESSORY HARDWARE SUCH AS MACHINE SCREWS, NAILS, CABLE CLAMPS, FIXTURE STUDS, ETC.

Copyright National Electrical Manufacturers Association
Provided by IHS under license with NEMA
No reproduction or networking permitted without license from IHS

Not for Resale

STD.NEMA WD 6-ENGL 1997 ■ 6470247 0514527 145 ■

DIMENSIONS FOR FLANGED INLETS AND CONNECTOR BODIES.

BLADE DIMENSIONS SHALL CONFORM WITH THE DIMENSIONS FOR PLUG BLADES OF THE SAME RATING AS SHOWN IN INDIVIDUAL CONFIGURATION RATING. THE MALE BASE SHALL ACCEPT A CYLINDER OF DIAMETER 'C' DESCRIBED ABOUT THE CENTER OF THE PLUG CAP CONFIGURATION OF THE SAME RATING FOR A DEPTH NOT LESS THAN DIMENSION 'B'.

THE CONNECTOR BODY SHALL FIT WITHIN A CIRCLE OF DIAMETER 'C' DESCRIBED ABOUT THE CENTER OF THE RECEPTACLE CONFIGURATION OF THE SAME RATING FOR A LENGTH 'D' NOT LESS THAN 0.015 INCH PLUS THE MAXIMUM LENGTH OF DIMENSION 'B'.

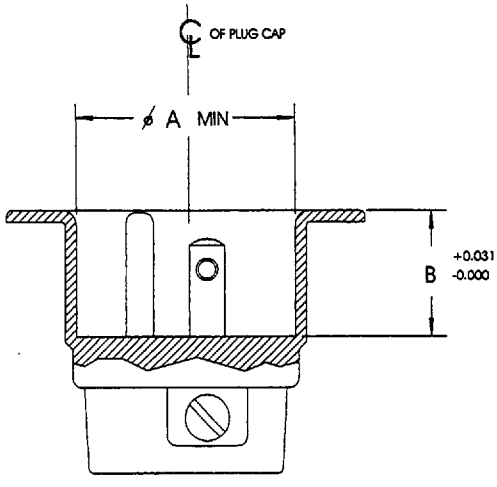

FLANGED INLET

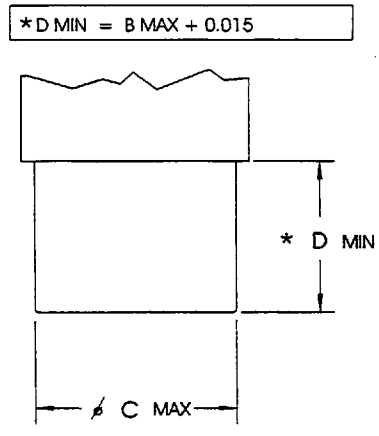

CONNECTOR BODY

CONFIGURATION NUMBER	DIMENSIONS		
	ø A	ø C	B
1	0.990	0.970	0.468
2, ML-3	1.150	1.130	0.468
›, 2-15, 5-15, 5-20, 6-15, 6-20, 7-15, 11-15, 11-20, 14-15, 15-15, 18-15, 24-15, 24-20, L1-15, L2-20, L5-15, L6-15, L7-15, L11-15	1.550	1.531	0.843
ɔ, 7-20, 10-20, 14-20, 15-20, 18-20	2.030	2.010	0.875
), 5-30, 5-50, 6-30, 6-50, 7-30, 7-50, 10-30, 10-50, 11-30, 11-50, 14-30, 14-50, 14-60, 15-30, 15-50, 15-60, 18-30, 18-50, 18-60, 24-30, 24-50	2.620	2.600	1.406
?0, L6-20, L7-20, L8-20, L9-20, L10-20, L11-20, L12-20	1.880	1.860	0.921
30, L6-30, L7-30, L8-30, L9-30, L10-30, L11-30, L12-3, L13-30	1.880	1.860	1.000
-20, L15-20, L16-20, L18-20, L19-20, L20-20, L21-20, L22-20, L23-20, L24-20	2.000	1.980	0.921
-30, L15-30, L16-30, L17-30, L18-30, L19-30, L20-30, L21-30, L22-30, L23-30	2.000	1.980	1.000

Copyright National Electrical Manufacturers Association
Provided by IHS under license with NEMA
No reproduction or networking permitted without license from IHS
Not for Resale

FLAT BLADE HOLE LOCATIONS

GENERAL INFORMATION

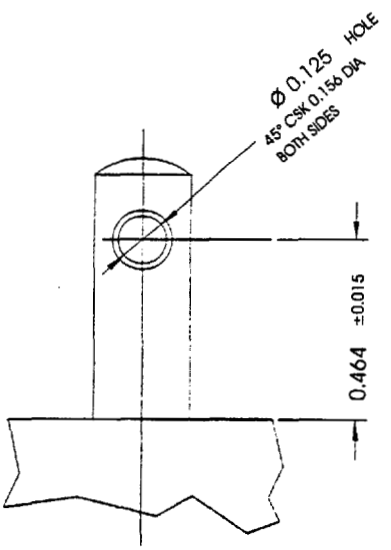

LOCATION # 1

CONFIGURATIONS USING LOCATION # 1

1-15, 2-15, 5-15, 6-15, 7-15, 11-15,
14-15, 15-15, 18-15, 24-15
1-20, 2-20, 5-20, 5-20ALT, 6-20, 6-20ALT
7-20, 10-20, 11-20, 14-20, 15-20, 18-20, 24-20

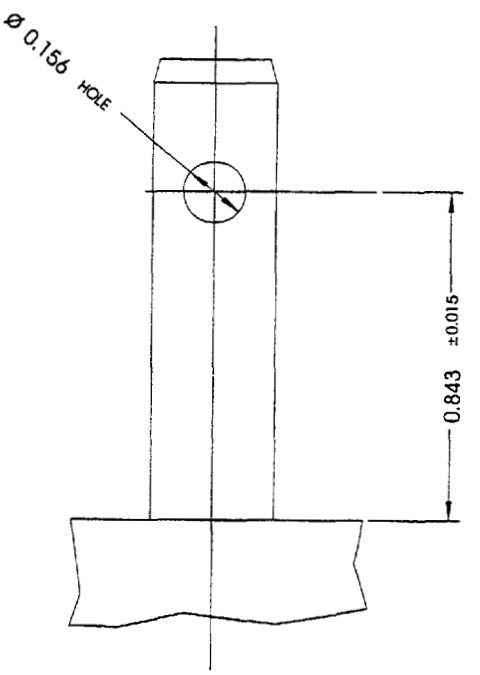

LOCATION # 2

CONFIGURATIONS USING LOCATION # 2

1-30, 2-30, 5-30, 6-30, 7-30, 10-30, 11-30
14-30, 15-30, 18-30, 24-30.
5-50, 6-50, 7-50, 10-50, 11-50, 14-50,
15-50, 18-50, 24-50
14-60, 15-60, 18-60.

NOTES:

1- HOLE IN FLAT BLADE IS OPTIONAL, AND IT IS INTENDED FOR MANUFACTURING PURPOSES ONLY.
HOWEVER IF USED IT MUST BE LOCATED AS PER DIMENSIONS SHOWN ABOVE.

Copyright National Electrical Manufacturers Association
Provided by IHS under license with NEMA
No reproduction or networking permitted without license from IHS
Not for Resale

FIGURE 1-15
PLUG AND RECEPTACLE
125 volts, 15 amperes, 2 pole, 2 wire

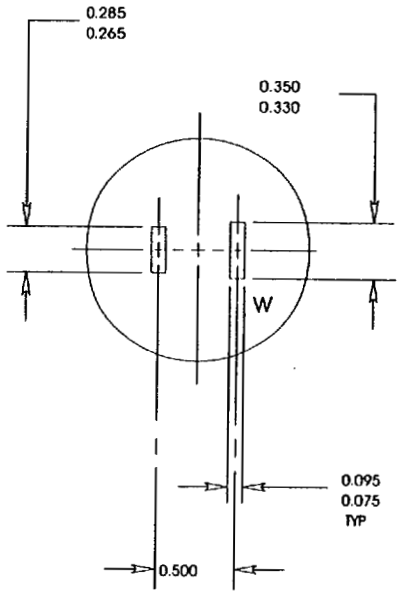

RECEPTACLE

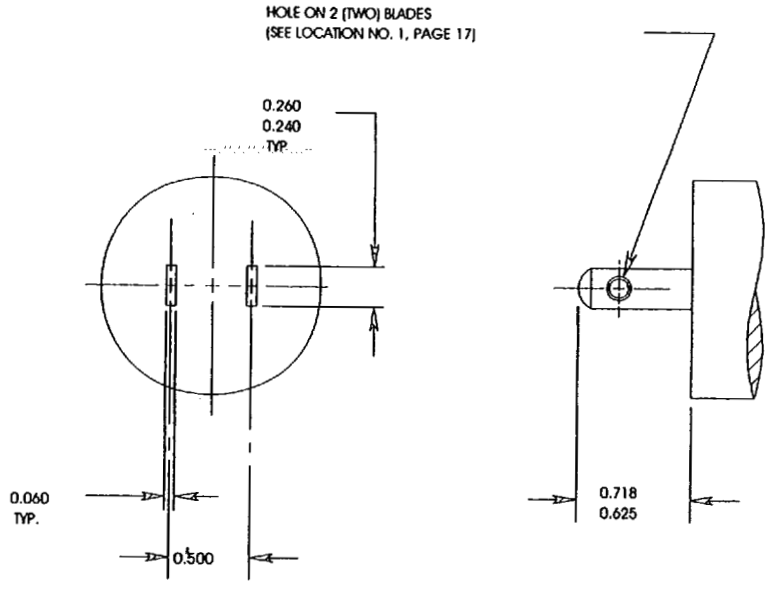

NON-POLARIZED PLUG

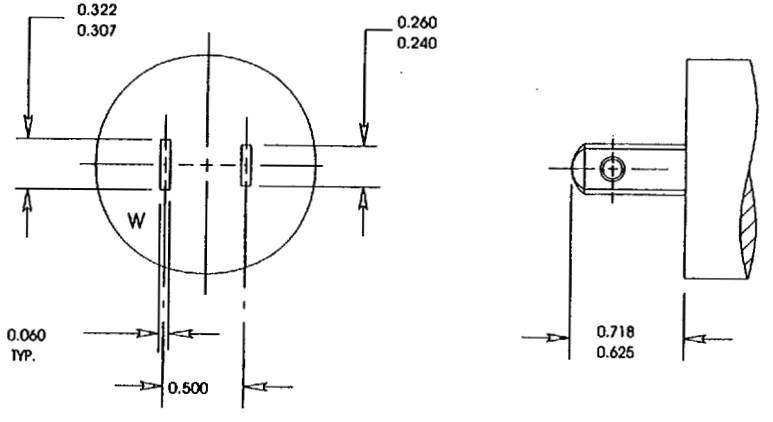

POLARIZED PLUG

NOTE: FOR TYPICAL DUPLEX OR RECTANGULAR STYLE DEVICES SEE PAGES NUMBER 10, 11 AND 12.

Copyright National Electrical Manufacturers Association
Provided by IHS under license with NEMA
No reproduction or networking permitted without license from IHS
Not for Resale

STD.NEMA WD 6-ENGL 1997 ■ 6470247 0514529 T18 ■

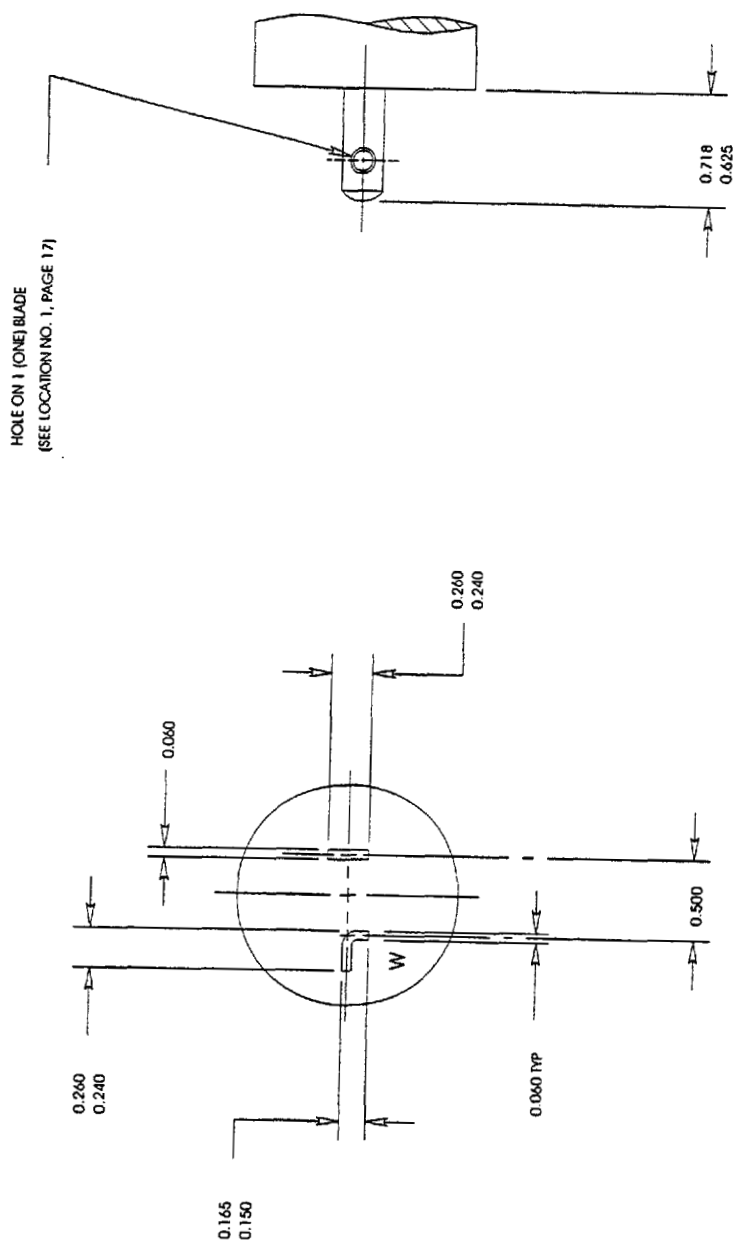

PLUG

NOTE: THIS PLUG MATES WITH RECEPTACLE CONFIGURATION 5-20.

FIGURE 1-20
PLUG
125 volts, 20 amperes, 2 pole, 2 wire

Copyright National Electrical Manufacturers Association
Provided by IHS under license with NEMA
No reproduction or networking permitted without license from IHS
Not for Resale

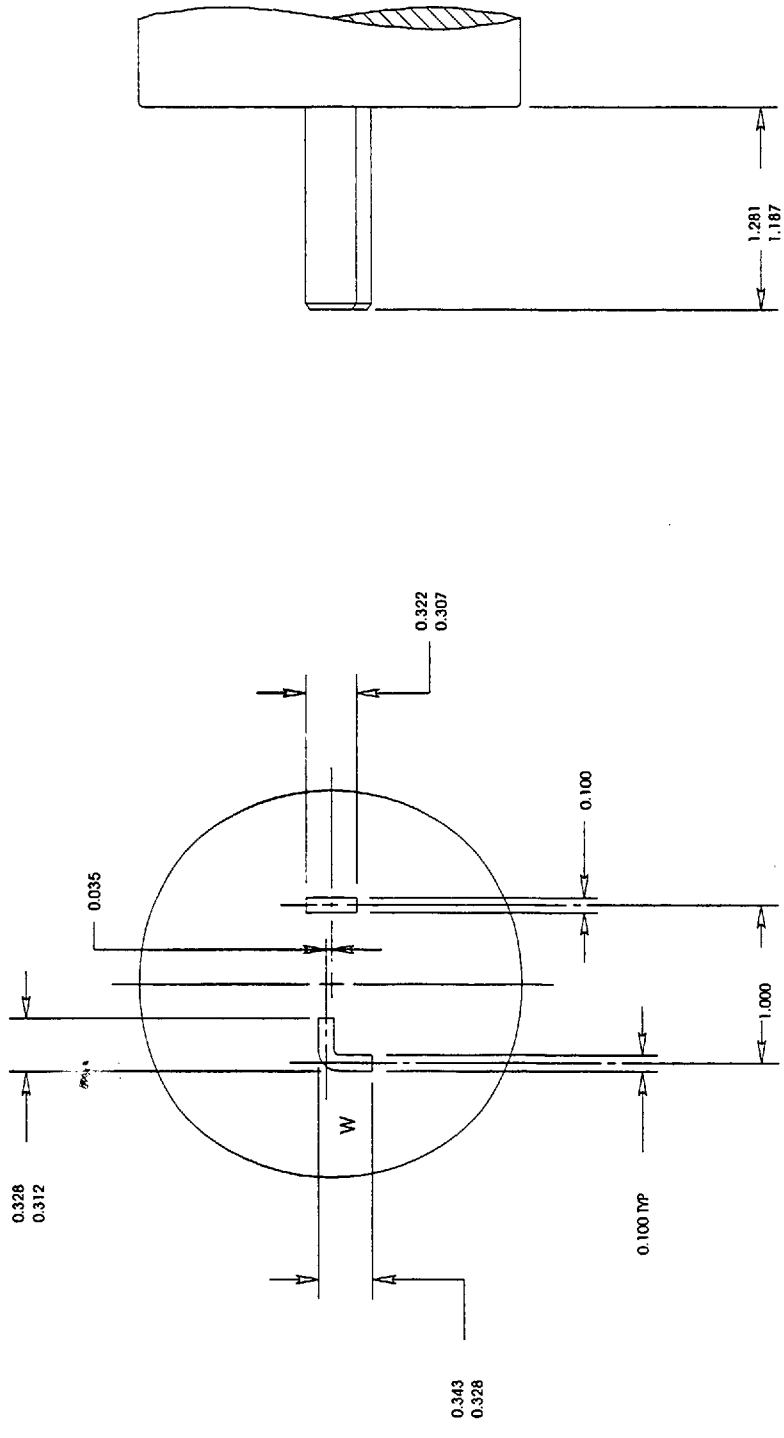

PLUG

NOTE: THIS PLUG MATES WITH RECEPTACLE CONFIGURATION 5-30.

FIGURE 1-30
PLUG
125 volts, 30 amperes, 2 Pole, 2 Wire

Copyright National Electrical Manufacturers Association
Provided by IHS under license with NEMA
No reproduction or networking permitted without license from IHS
Not for Resale

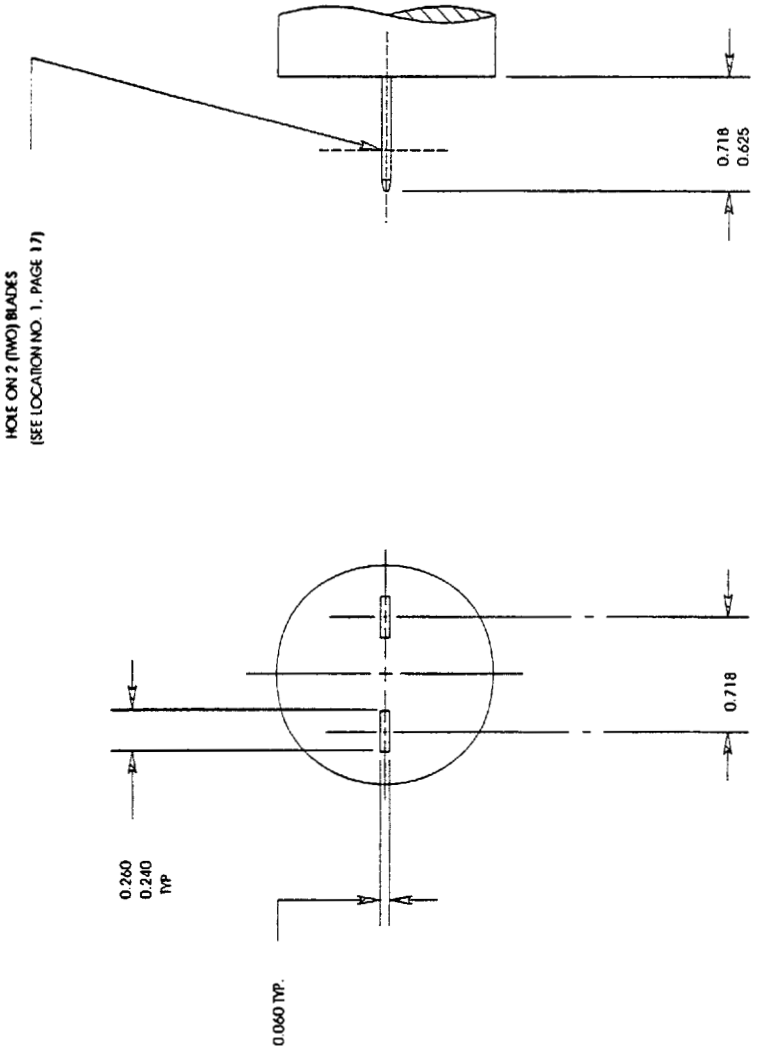

PLUG

NOTE: THIS PLUG MATES WITH RECEPTACLE CONFIGURATION 6-15

FIGURE 2-15
PLUG
250 volts, 15 amperes, 2 pole, 2 wire

Copyright National Electrical Manufacturers Association
Provided by IHS under license with NEMA
No reproduction or networking permitted without license from IHS

Not for Resale

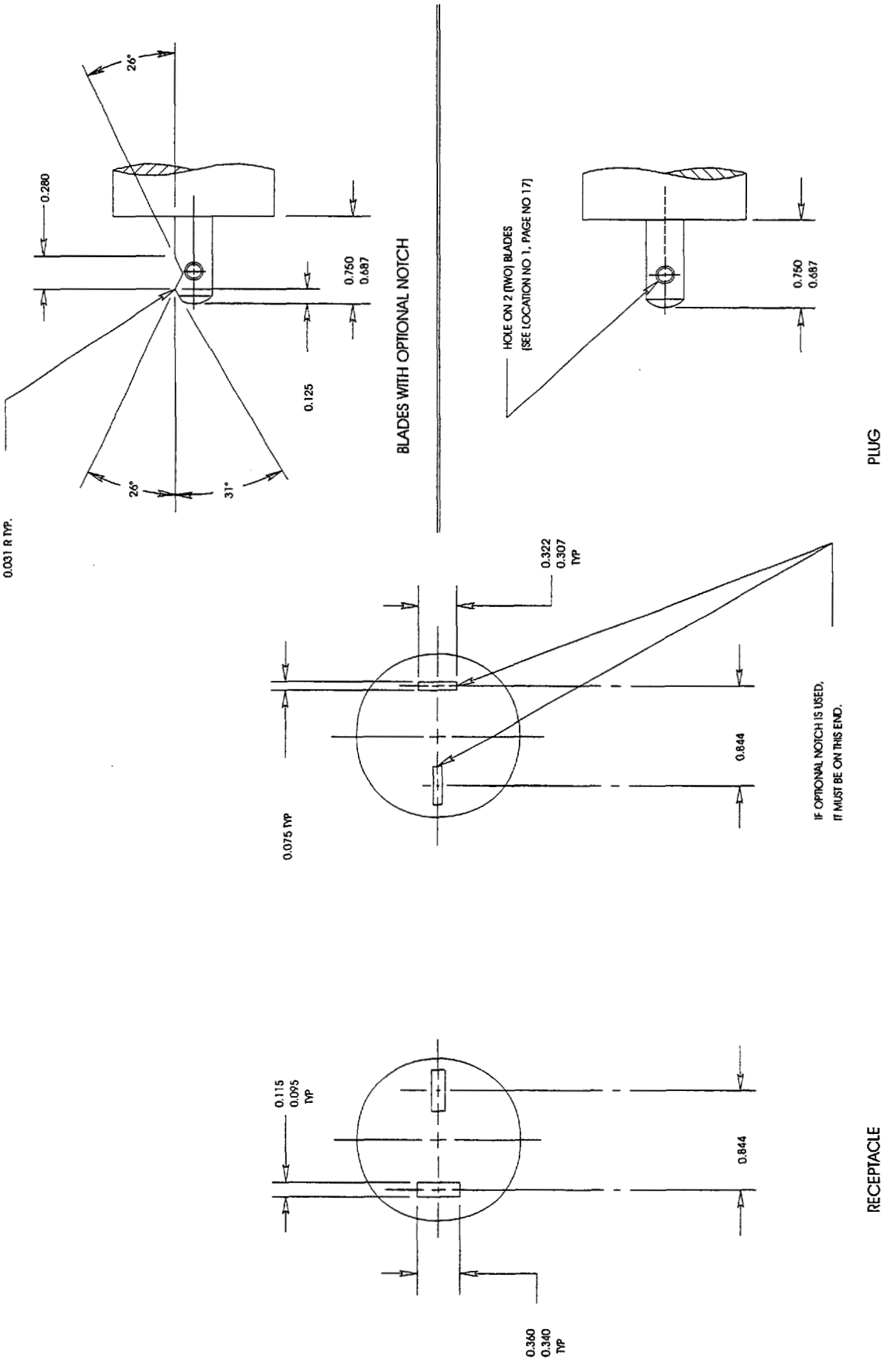

FIGURE 2-20
PLUG AND RECEPTACLE
250 volts, 20 amperes, 2 pole, 2 wire

Copyright National Electrical Manufacturers Association
Provided by IHS under license with NEMA
No reproduction or networking permitted without license from IHS

Not for Resale

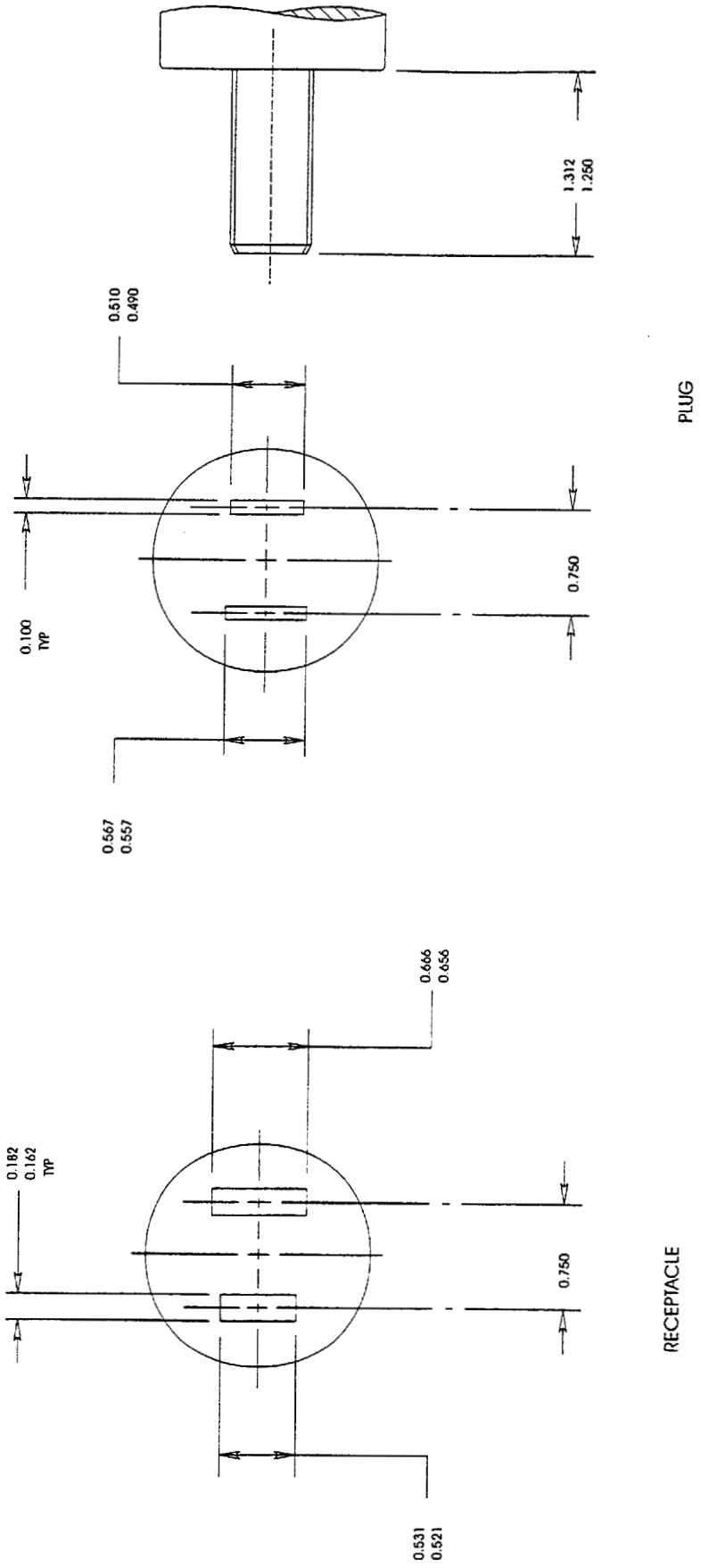

FIGURE 2-30
PLUG AND RECEPTACLE
250 volts, 30 amperes, 2 pole, 2 wire

Copyright National Electrical Manufacturers Association
Provided by IHS under license with NEMA
No reproduction or networking permitted without license from IHS

Not for Resale

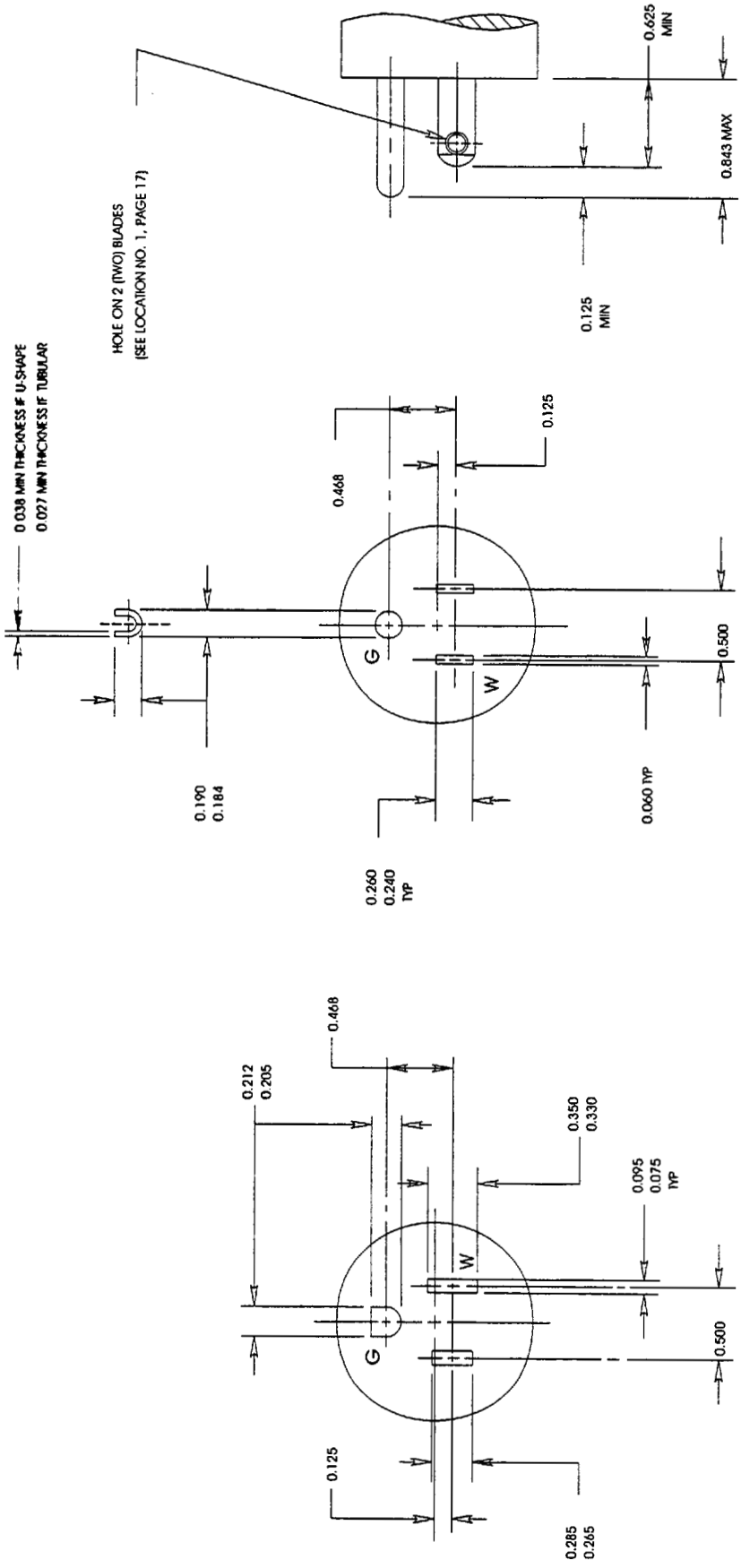

NOTE: FOR TYPICAL DUPLEX OR RECTANGULAR STYLE DEVICES SEE PAGES 10, 11, AND 12.

FIGURE 5-15
PLUG AND RECEPTACLE
125 volts, 15 amperes, 2 pole, 3 wire, Grounding type

Copyright National Electrical Manufacturers Association
Provided by IHS under license with NEMA
No reproduction or networking permitted without license from IHS

Not for Resale

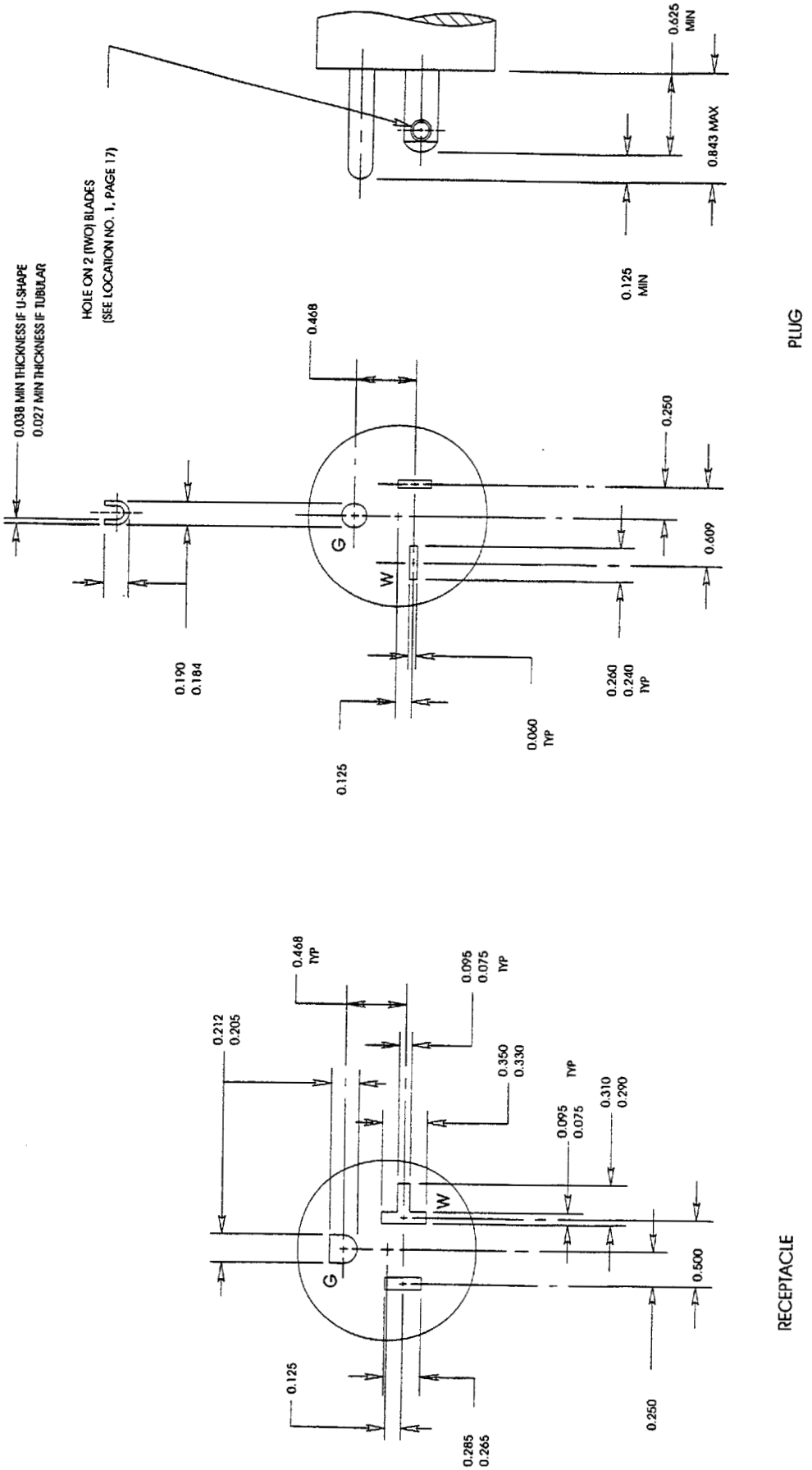

NOTE: FOR TYPICAL DUPLEX OR RECTANGULAR STYLE DEVICES SEE PAGES 10, 11, AND 12.

FIGURE 5-20
PLUG AND RECEPTACLE
125 volts, 20 amperes, 2 pole, 3 wire, Grounding type

Copyright National Electrical Manufacturers Association
Provided by IHS under license with NEMA
No reproduction or networking permitted without license from IHS

Not for Resale

Copyright National Electrical Manufacturers Association
Provided by IHS under license with NEMA
No reproduction or networking permitted without license from IHS
Not for Resale

FIGURE 5-20 ALT (ALTERNATE CONSTRUCTION - CANADA)
RECEPTACLE

125 volts, 20 amperes, 2 pole, 3 wire, Grounding type

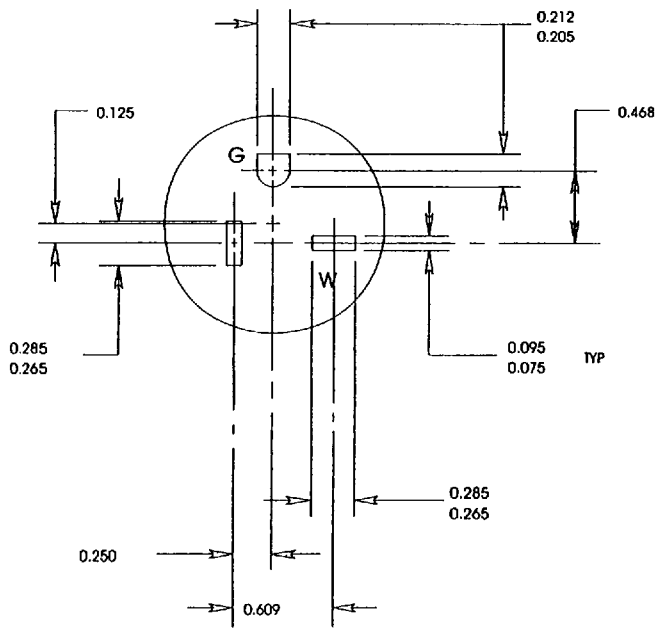

RECEPTACLE

NOTE: FOR TYPICAL DUPLEX OR RECTANGULAR STYLE DEVICES SEE PAGES 10, 11, AND 12.

STD.NEMA WD 6-ENGL 1997 ■ 6470247 0514537 094 ■

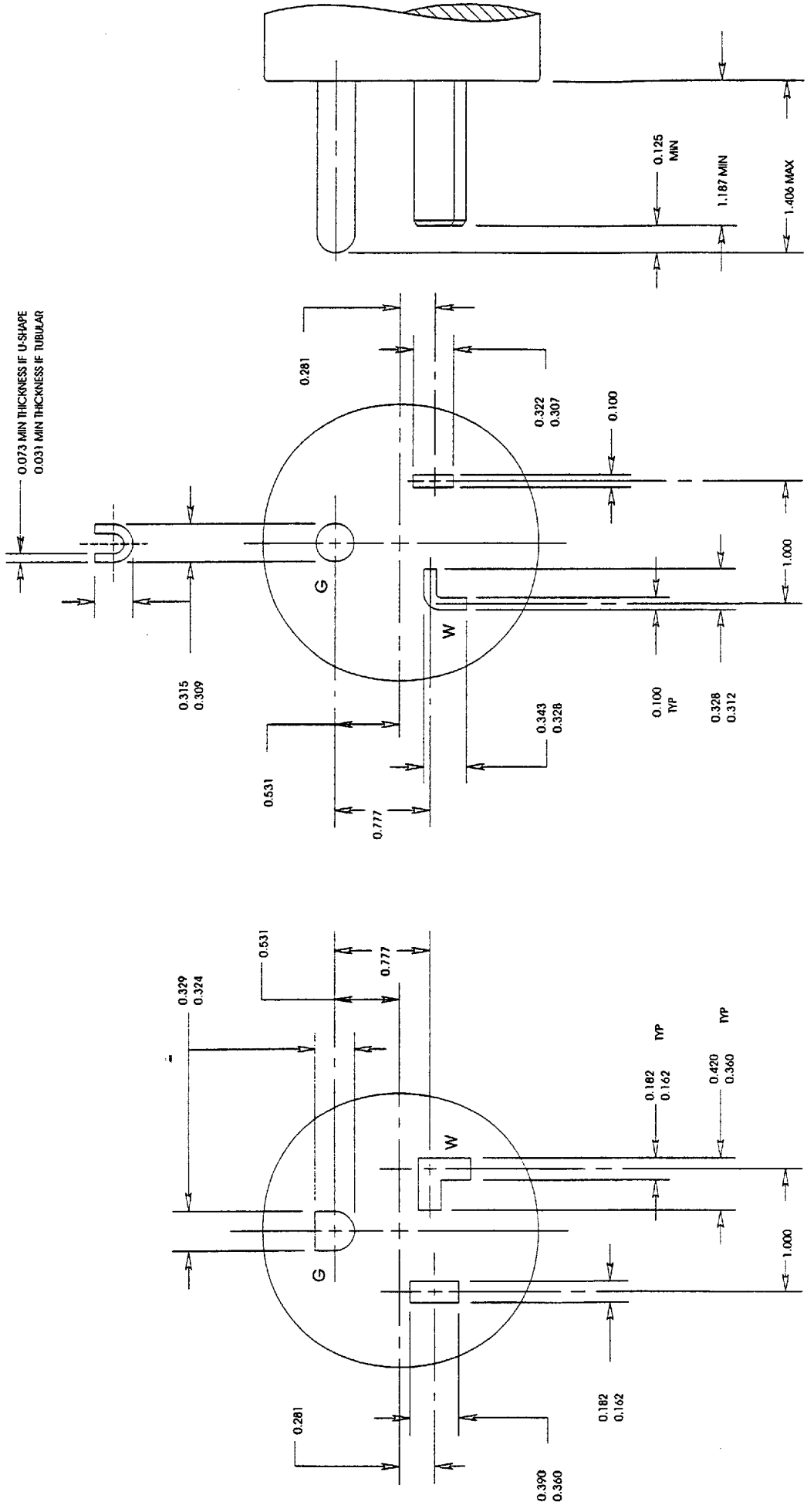

FIGURE 5-30
PLUG AND RECEPTACLE
125 volts, 30 amperes, 2 pole, 3 wire, Grounding type

Copyright National Electrical Manufacturers Association
Provided by IHS under license with NEMA
No reproduction or networking permitted without license from IHS

Not for Resale

STD.NEMA WD 6-ENGL 1997 ■ 6470247 0514539 967 ■

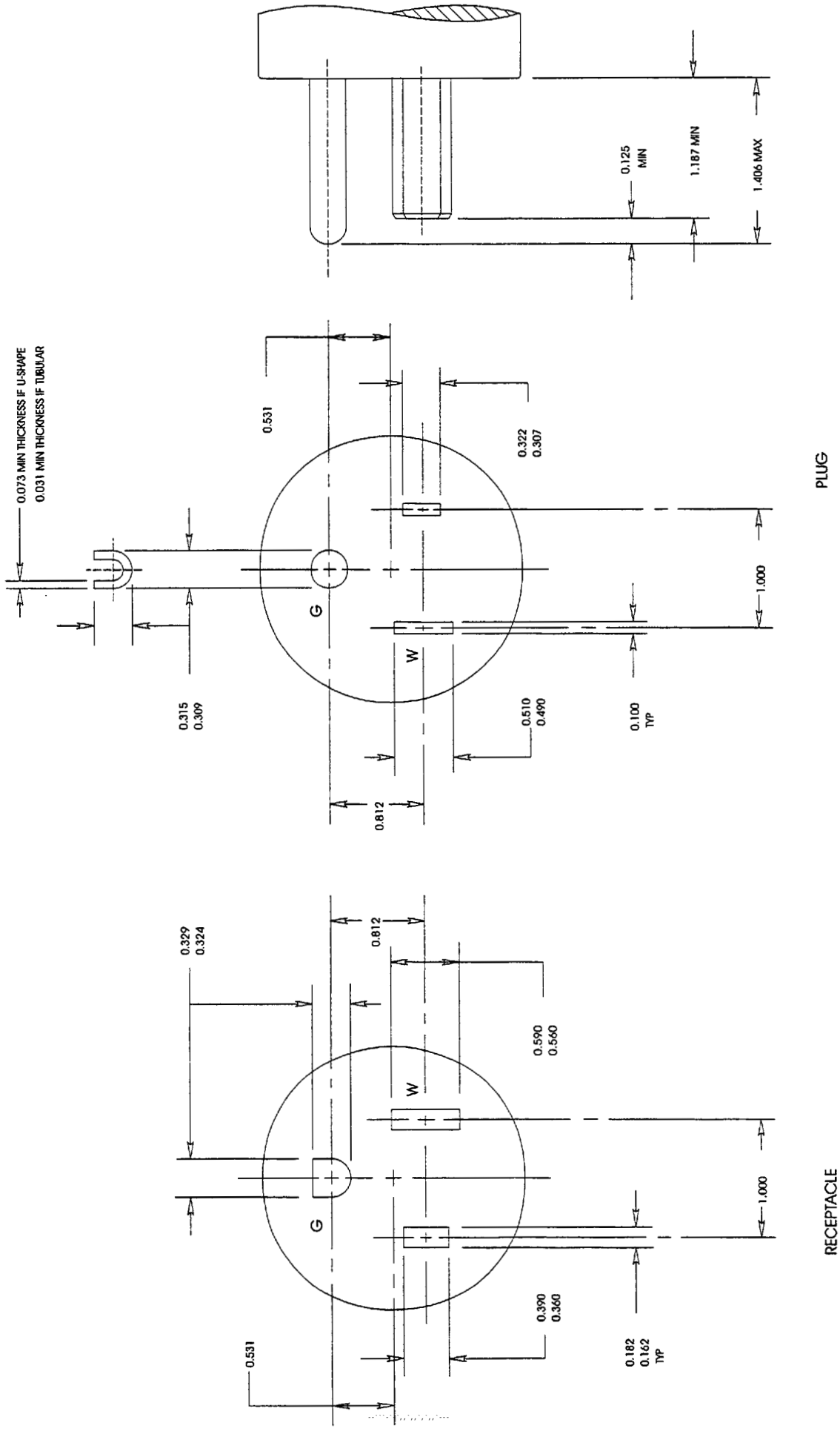

FIGURE 5-50
PLUG AND RECEPTACLE
125 volts, 50 amperes, 2 pole, 3 wire, Grounding type

Copyright National Electrical Manufacturers Association
Provided by IHS under license with NEMA
No reproduction or networking permitted without license from IHS
Not for Resale

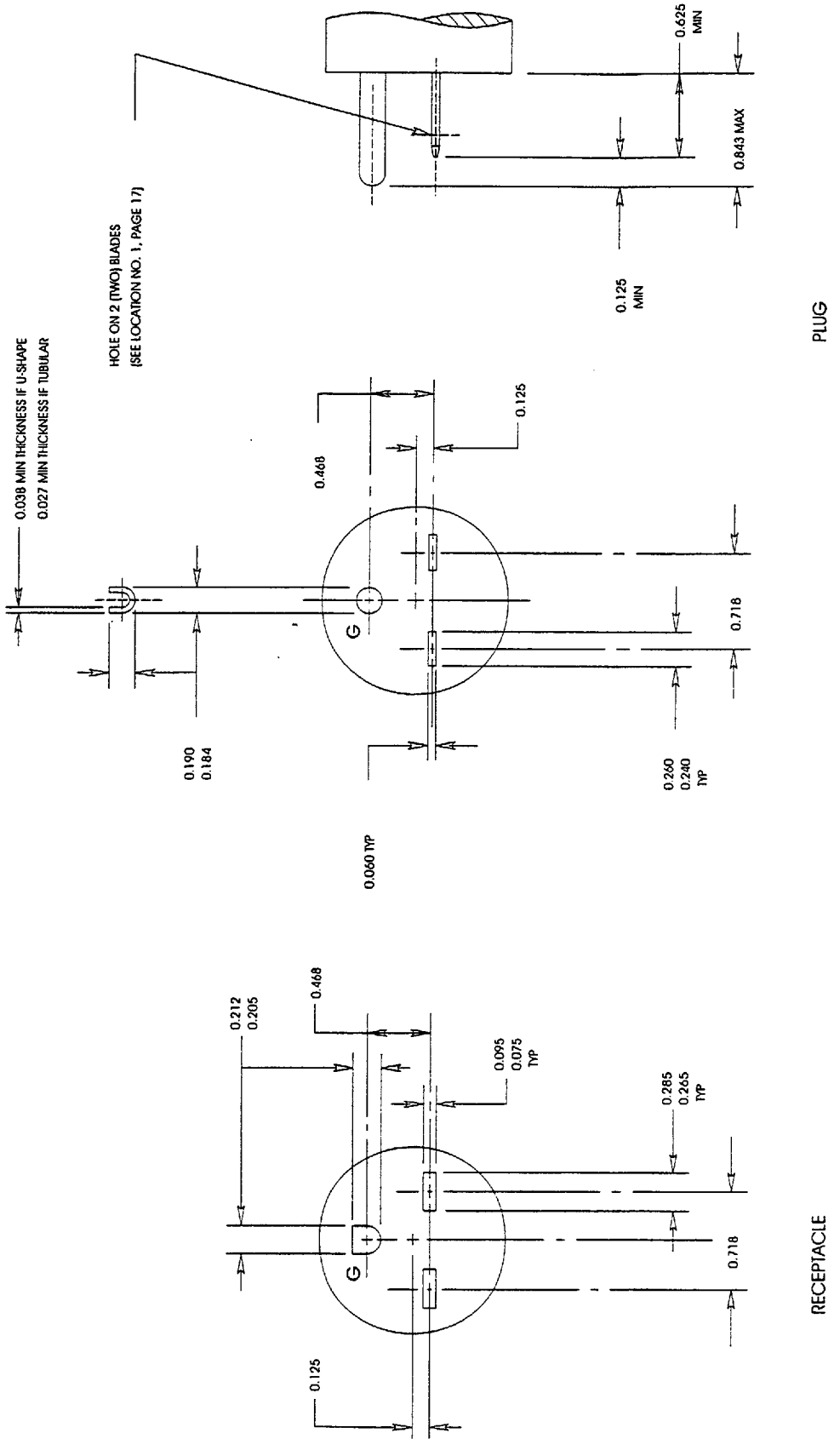

NOTE: FOR TYPICAL DUPLEX OR RECTANGULAR STYLE DEVICES SEE PAGES 10, 11, AND 12.

FIGURE 6-15
PLUG AND RECEPTACLE
250 volts, 15 amperes, 2 pole, 3 wire, Grounding type

Copyright National Electrical Manufacturers Association
Provided by IHS under license with NEMA
No reproduction or networking permitted without license from IHS

Not for Resale

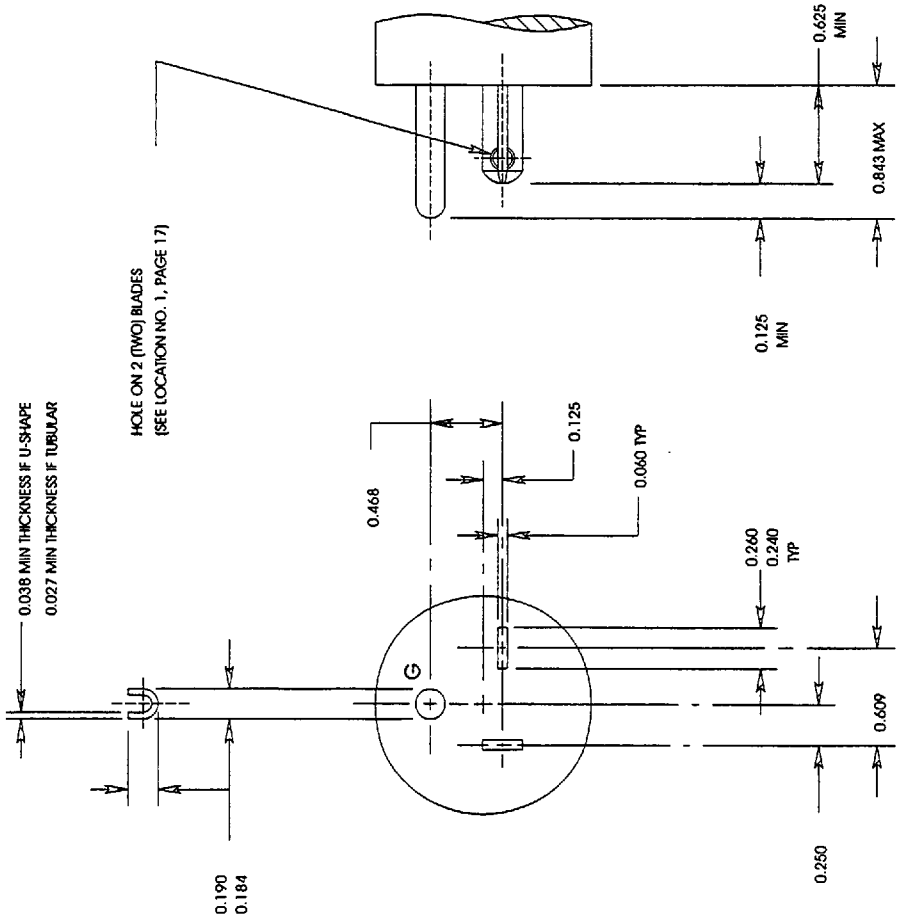

PLUG

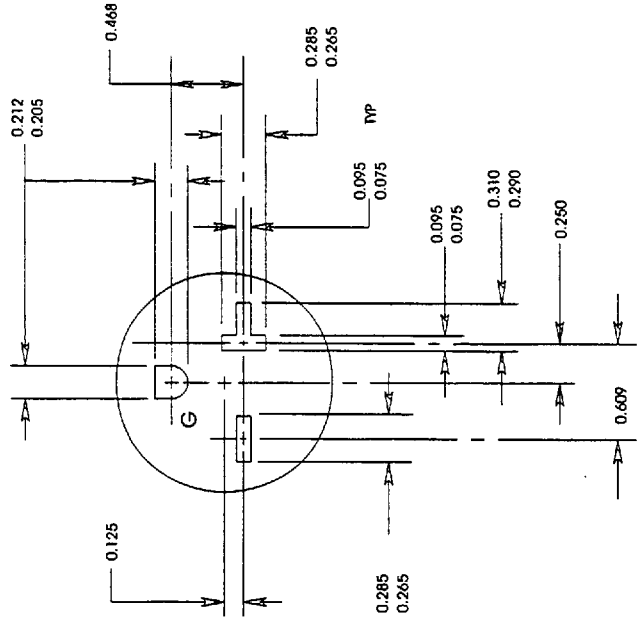

RECEPTACLE

NOTE: FOR TYPICAL DUPLEX OR RECTANGULAR STYLE DEVICES SEE PAGES 10, 11, AND 12.

FIGURE 6-20
PLUG AND RECEPTACLE
250 volts, 20 amperes, 2 pole, 3 wire, Grounding type

Copyright National Electrical Manufacturers Association
Provided by IHS under license with NEMA
No reproduction or networking permitted without license from IHS

Not for Resale

Copyright National Electrical Manufacturers Association
Provided by IHS under license with NEMA
No reproduction or networking permitted without license from IHS

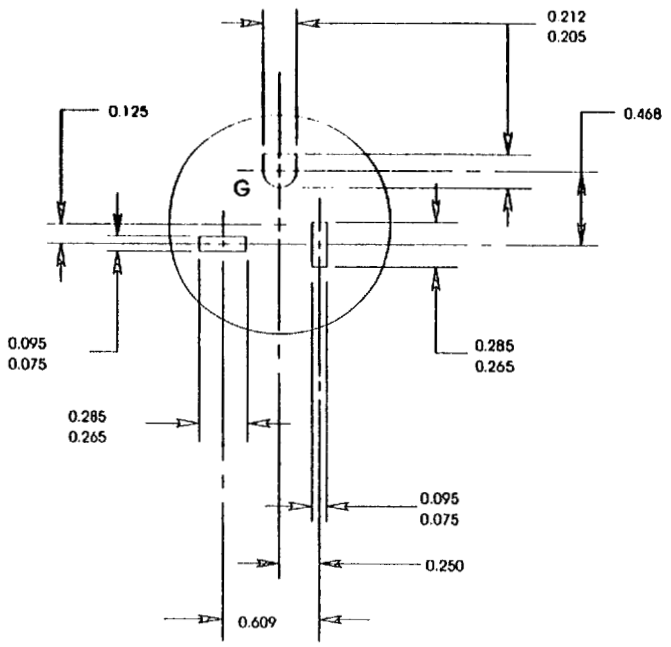

RECEPTACLE

NOTE: FOR TYPICAL DUPLEX OR RECTANGULAR STYLE DEVICES SEE PAGES 10, 11, AND 12.

FIGURE 6-20 ALT (ALTERNATE CONSTRUCTION - CANADA)
RECEPTACLE
250 volts, 20 amperes, 2 pole, 3 wire, Grounding type

Not for Resale

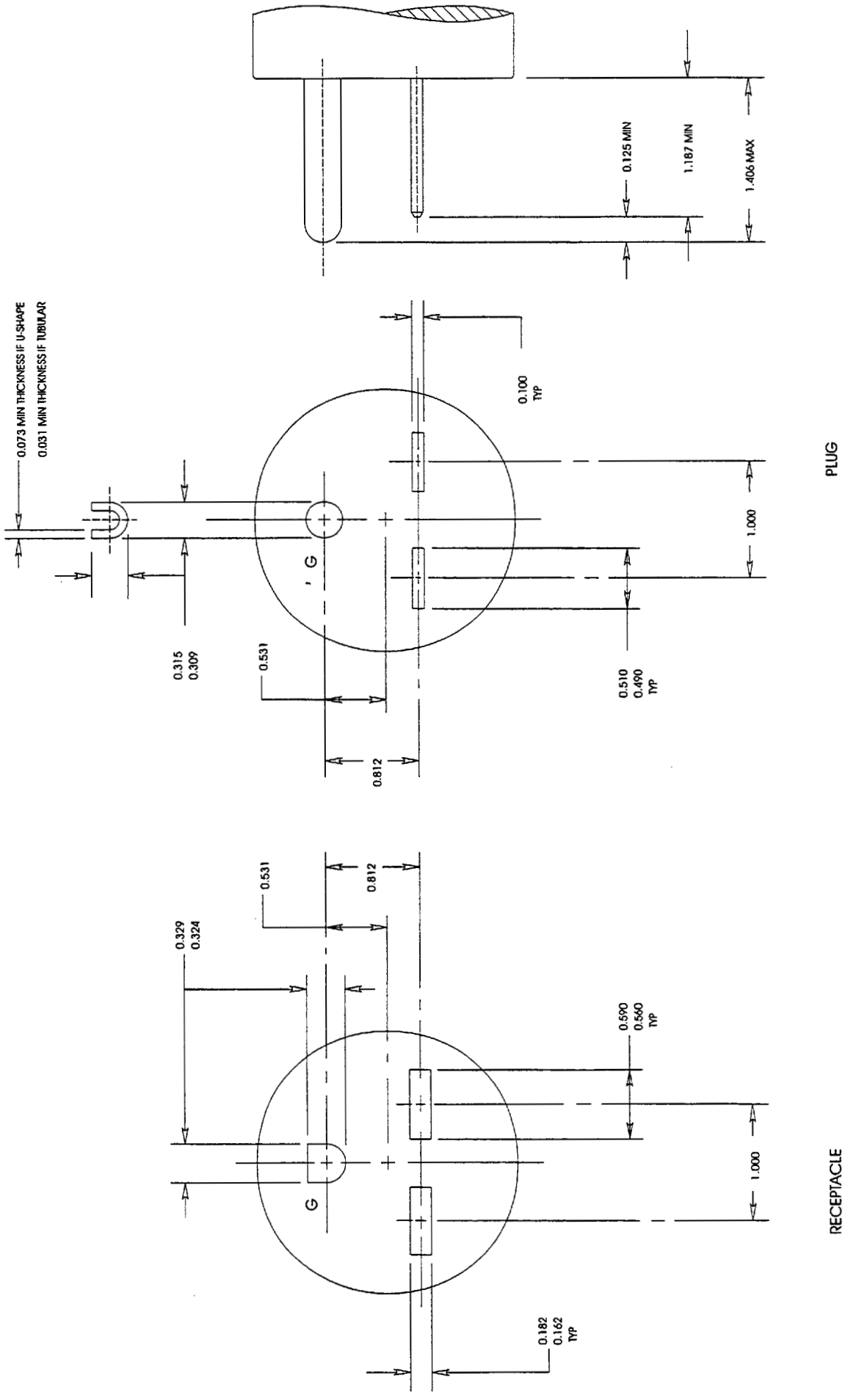

FIGURE 6-30
PLUG AND RECEPTACLE
250 volts, 30 amperes, 2 pole, 3 wire, Grounding type

Copyright National Electrical Manufacturers Association
Provided by IHS under license with NEMA
No reproduction or networking permitted without license from IHS

Not for Resale

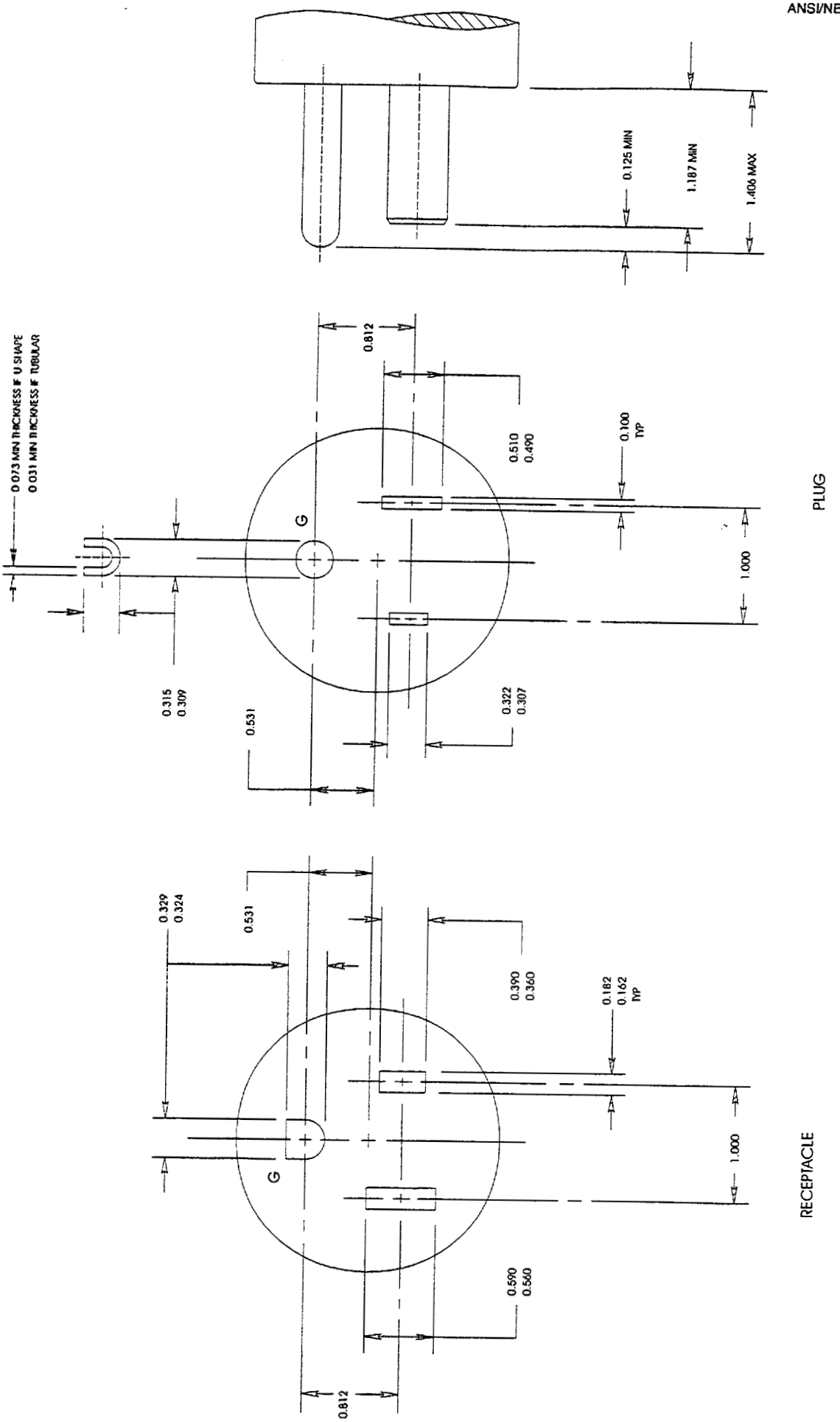

FIGURE 6-50
PLUG AND RECEPTACLE
250 volts, 50 amperes, 2 pole, 3 wire, Grounding type

Copyright National Electrical Manufacturers Association
Provided by IHS under license with NEMA
No reproduction or networking permitted without license from IHS

Not for Resale

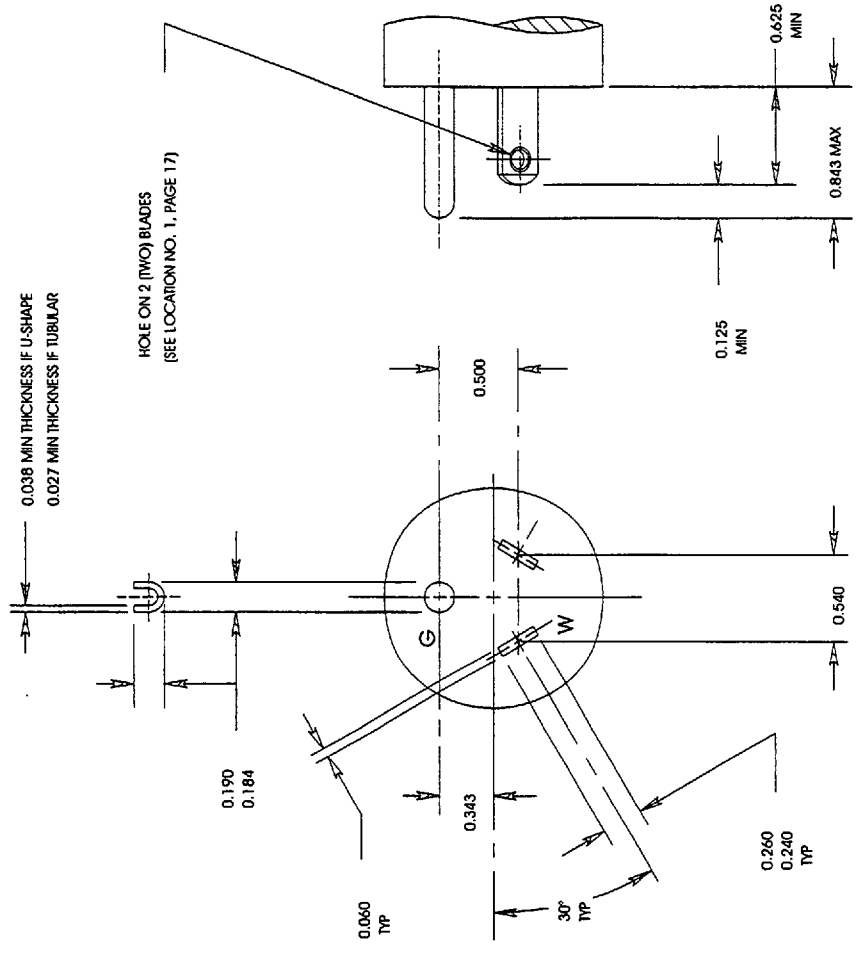

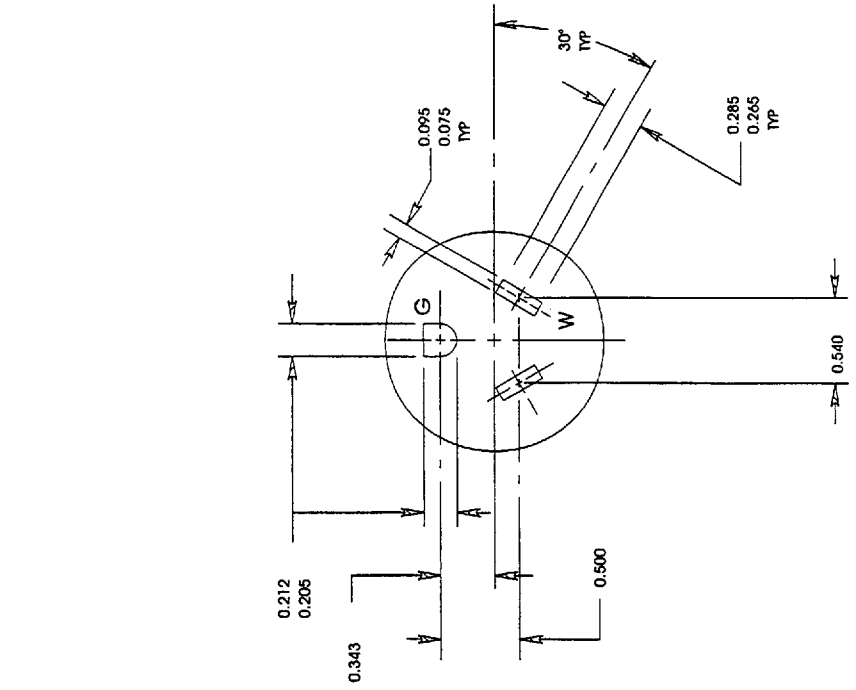

NOTE: FOR TYPICAL DUPLEX OR RECTANGULAR STYLE DEVICES SEE PAGES 10, 11, AND 12.

FIGURE 7-15
PLUG AND RECEPTACLE
277 volts ac, 15 amperes, 2 pole, 3 wire, Grounding type

Copyright National Electrical Manufacturers Association
Provided by IHS under license with NEMA
No reproduction or networking permitted without license from IHS
Not for Resale

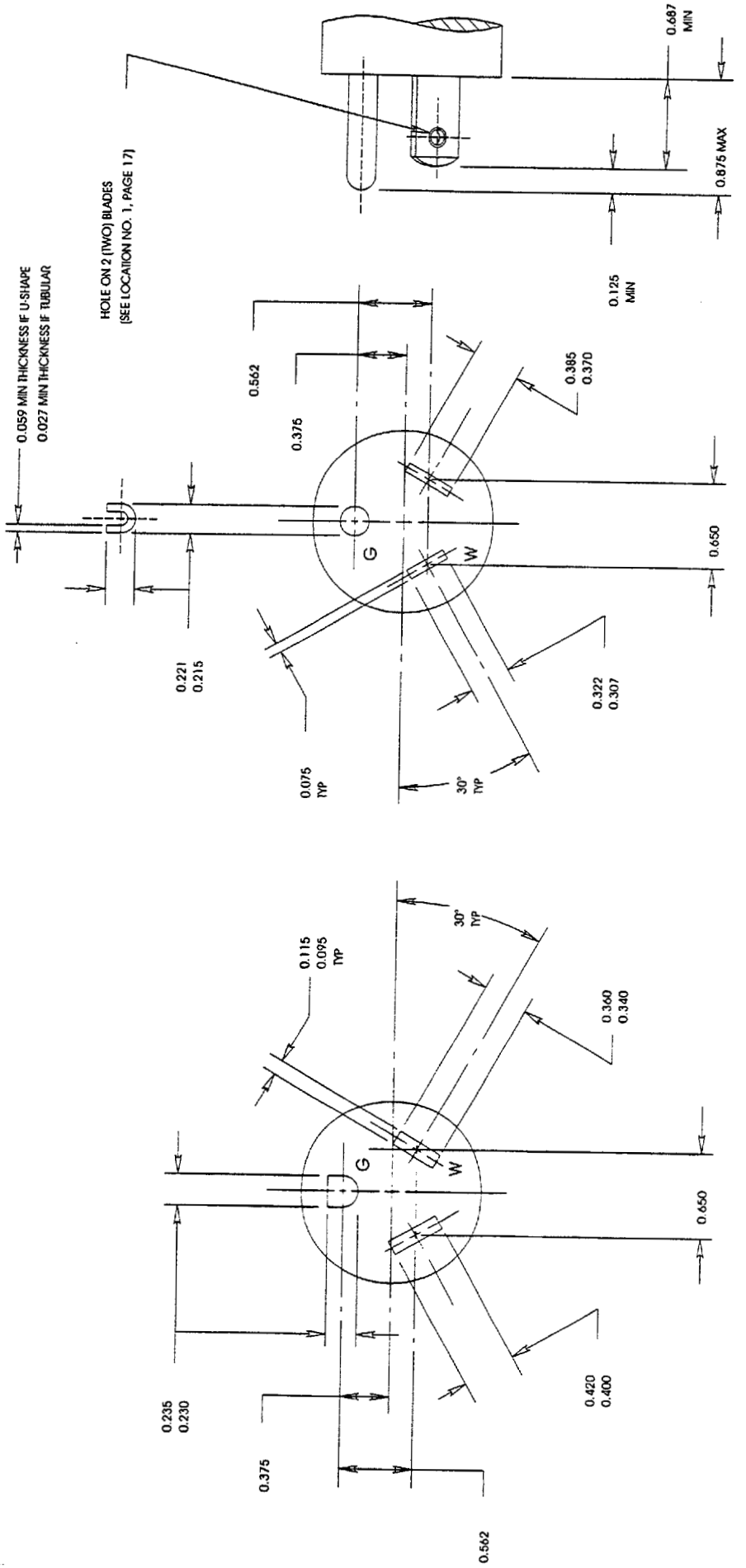

FIGURE 7-20
PLUG AND RECEPTACLE
277 volts ac, 20 amperes, 2 pole, 3 wire, Grounding type

Copyright National Electrical Manufacturers Association
Provided by IHS under license with NEMA
No reproduction or networking permitted without license from IHS

Not for Resale

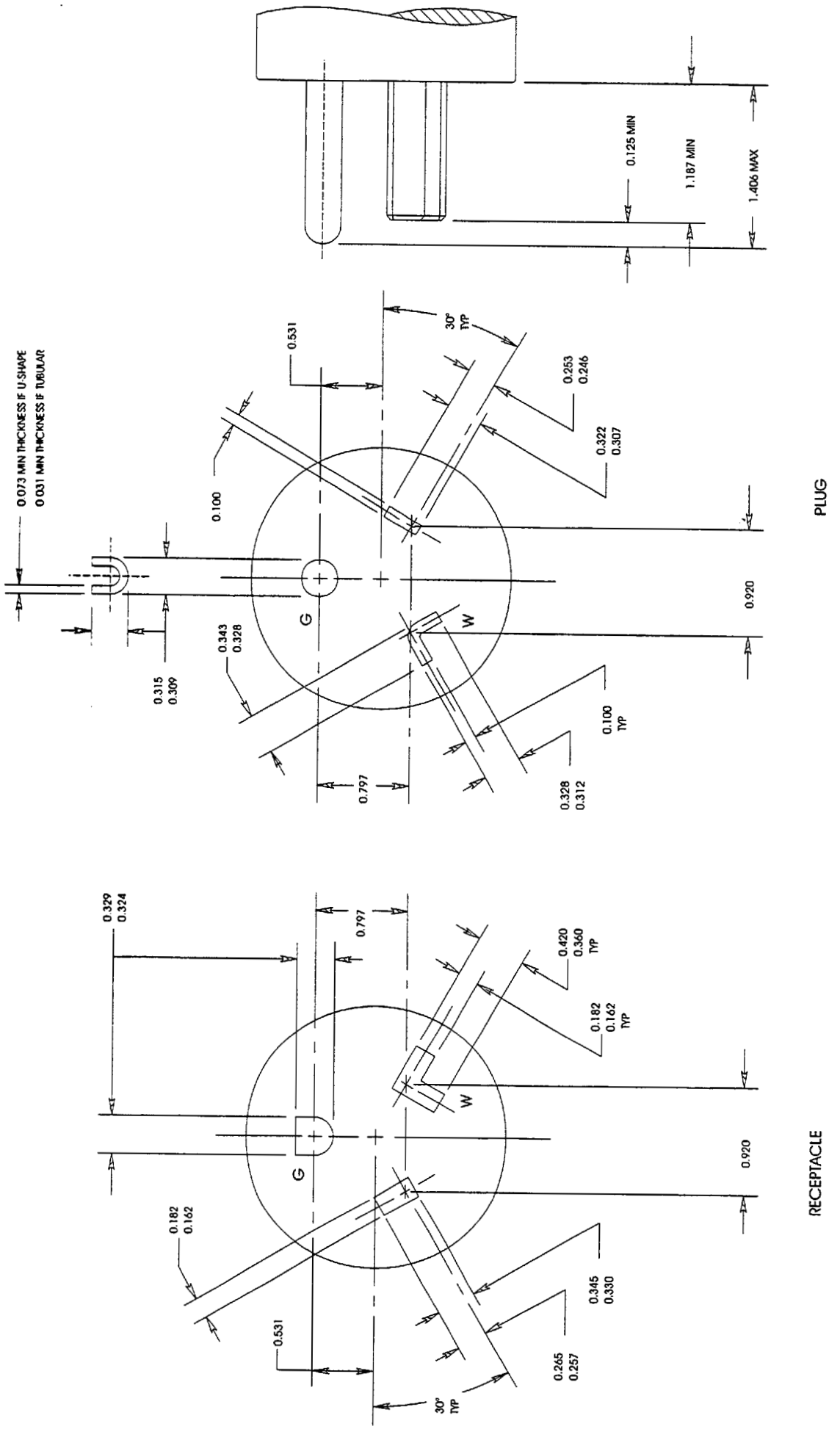

FIGURE 7-30
PLUG AND RECEPTACLE
277 volts ac, 30 amperes, 2 pole, 3 wire, Grounding type

Copyright National Electrical Manufacturers Association
Provided by IHS under license with NEMA
No reproduction or networking permitted without license from IHS
Not for Resale

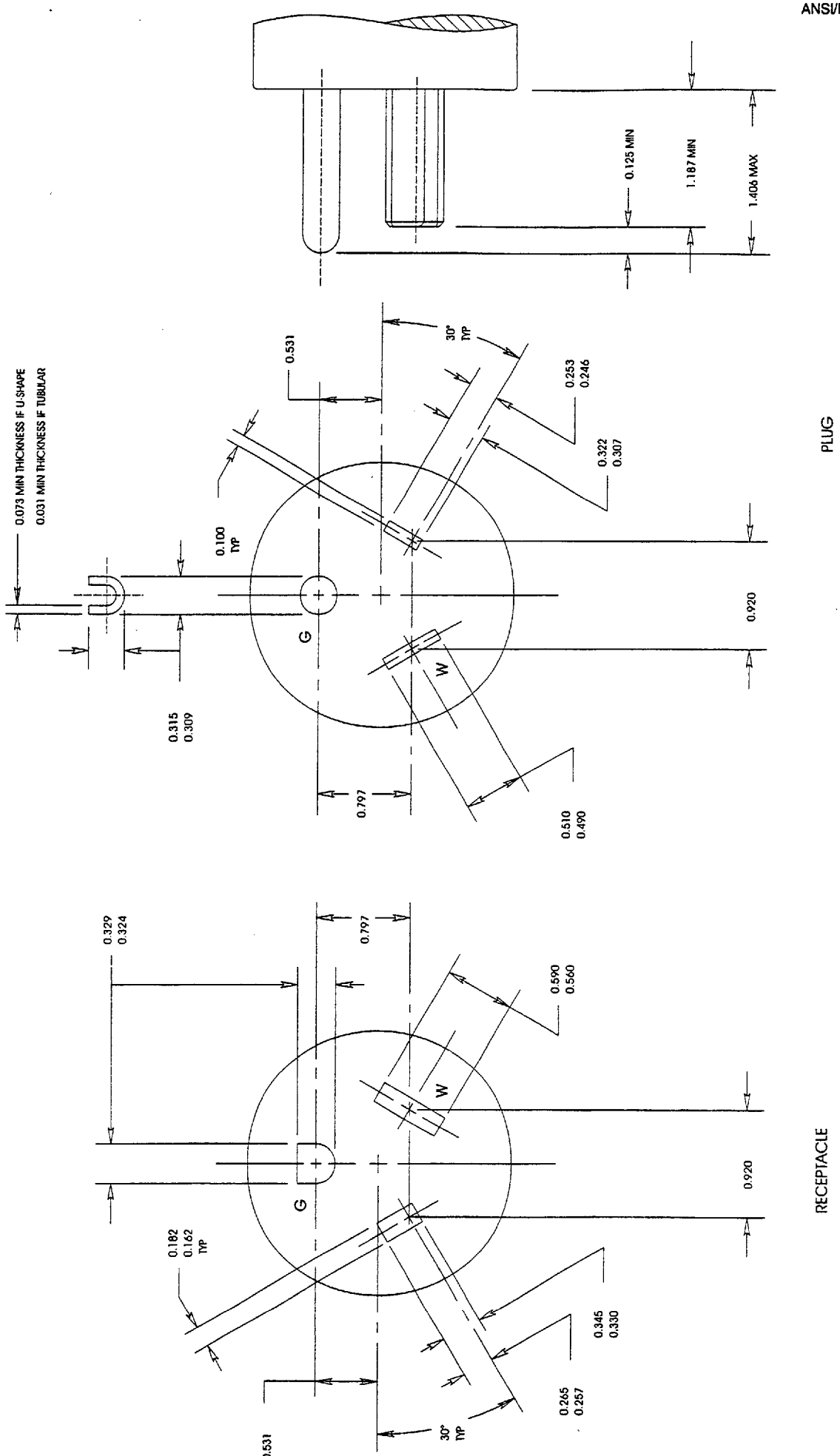

FIGURE 7-50
PLUG AND RECEPTACLE
277 volts ac, 50 amperes, 2 pole, 3 wire, Grounding type

Copyright National Electrical Manufacturers Association
Provided by IHS under license with NEMA
No reproduction or networking permitted without license from IHS

Not for Resale

STD.NEMA WD 6-ENGL 1997 ■ 6470247 0514549 806 ■

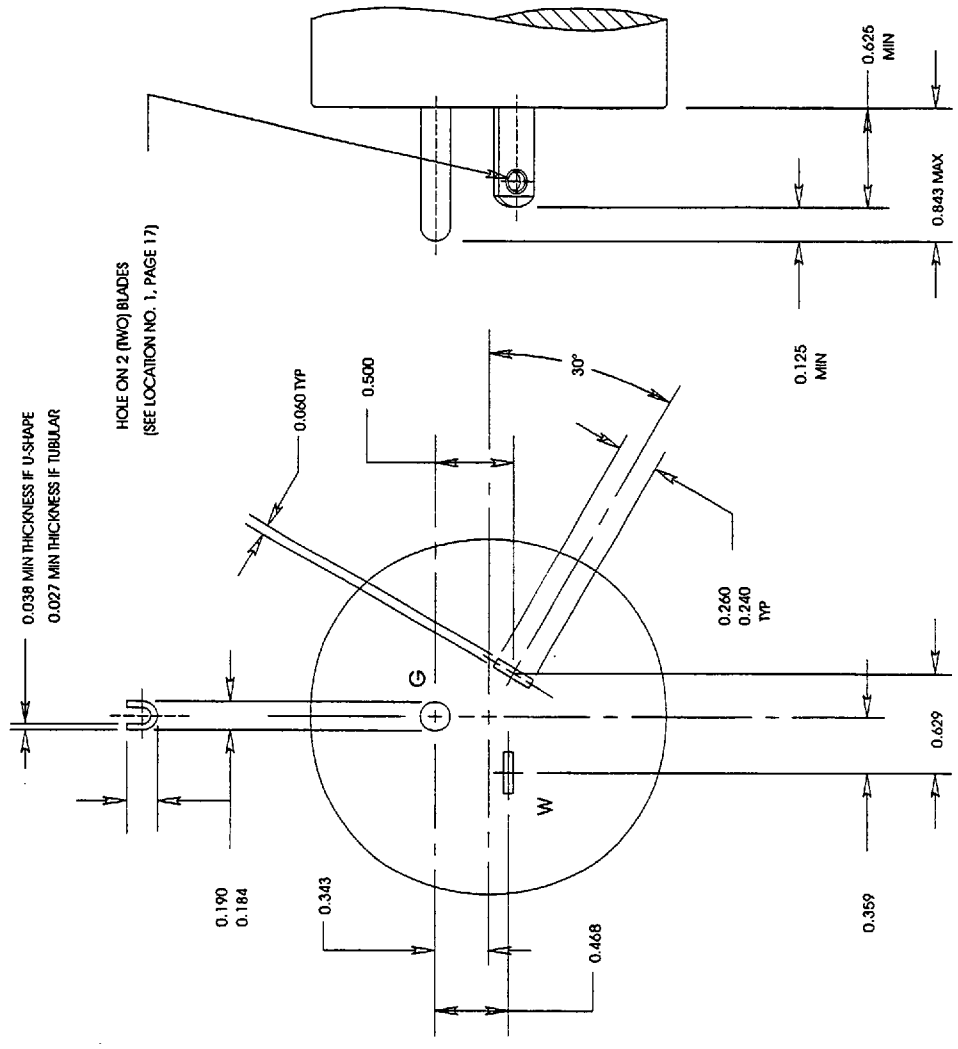

PLUG

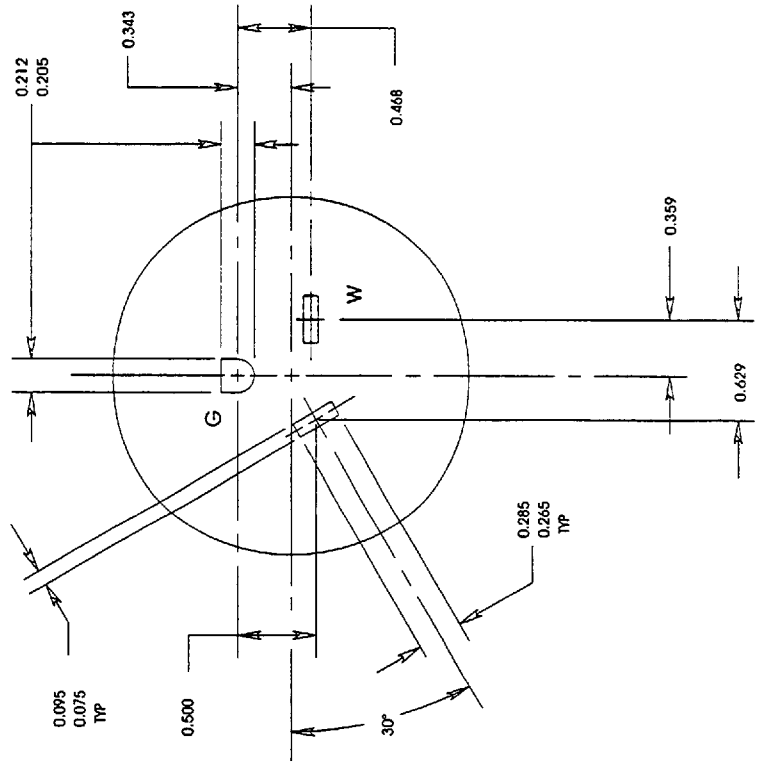

RECEPTACLE

FIGURE 24-15
PLUG AND RECEPTACLE
347 volts ac, 15 amperes, 2 pole, 3 wire, Grounding type

Copyright National Electrical Manufacturers Association
Provided by IHS under license with NEMA
No reproduction or networking permitted without license from IHS
Not for Resale

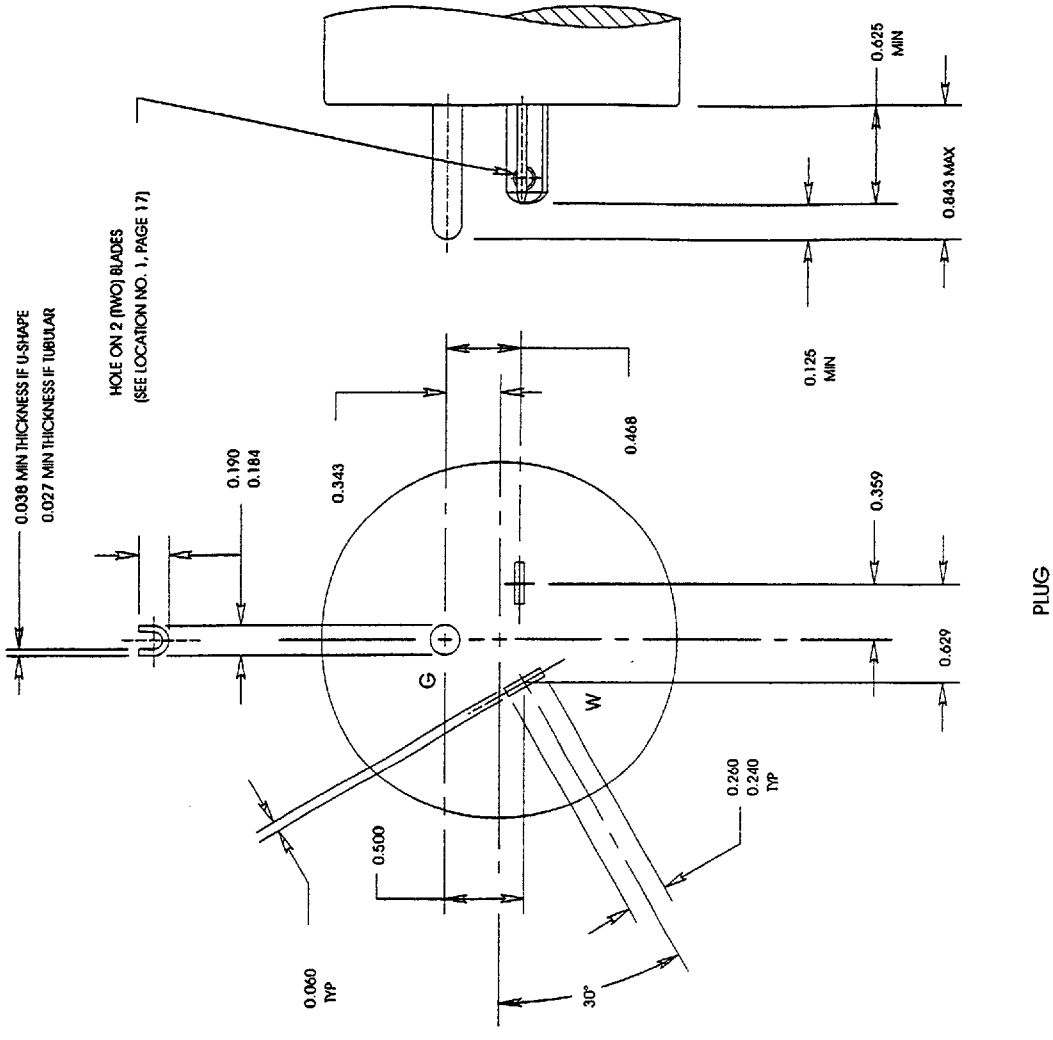

PLUG

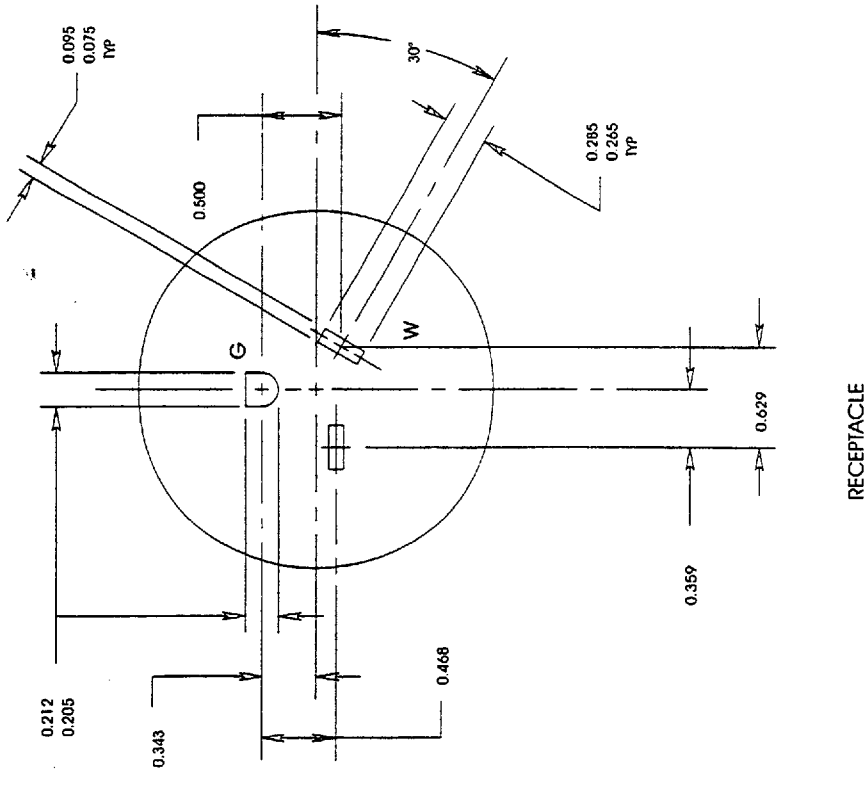

RECEPTACLE

FIGURE 24-20
PLUG AND RECEPTACLE
347 volts ac, 20 amperes, 2 pole, 3 wire grounding type

Copyright National Electrical Manufacturers Association
Provided by IHS under license with NEMA
No reproduction or networking permitted without license from IHS

Not for Resale

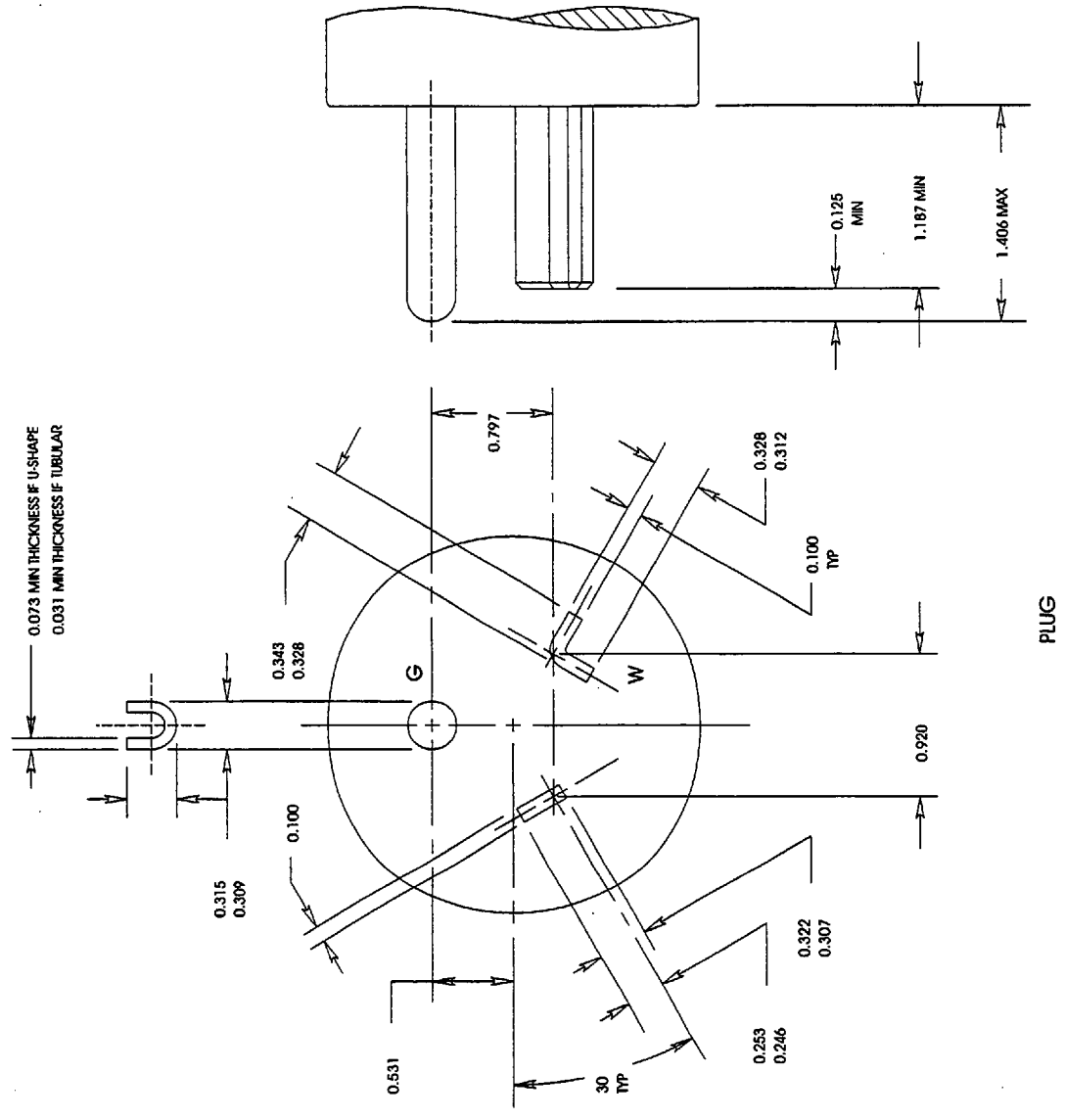

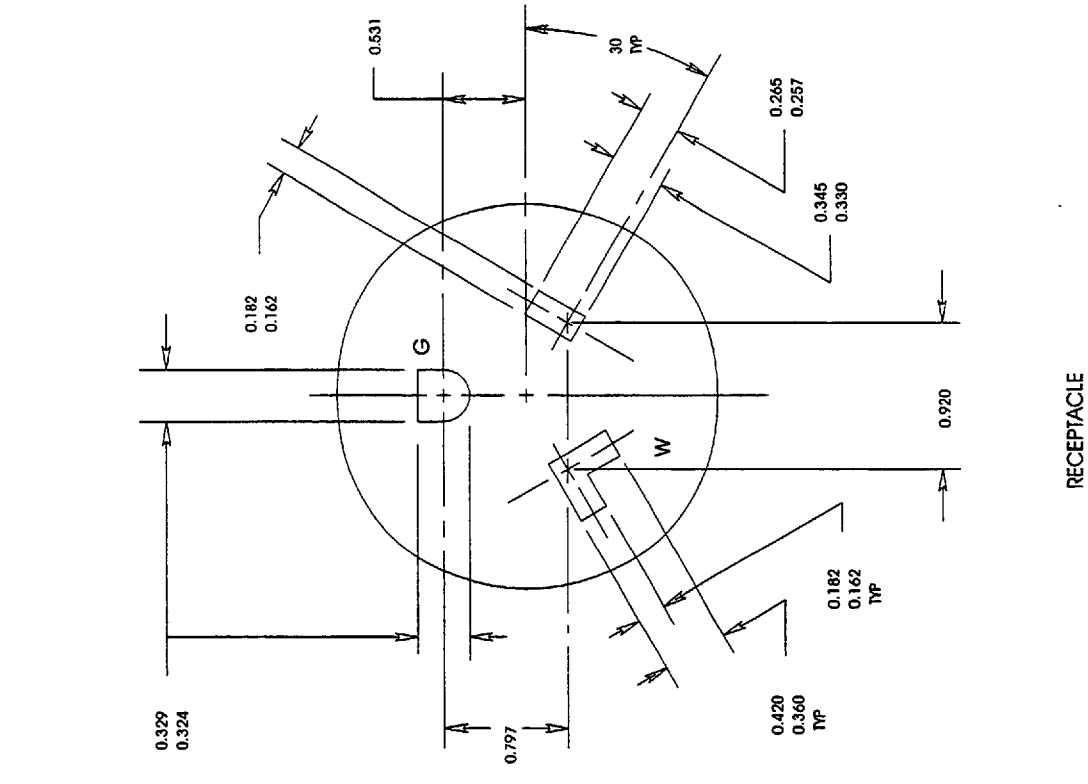

FIGURE 24-30
PLUG AND RECEPTACLE
347 volts ac, 30 amperes, 2 pole, 3 wire, Grounding type

Copyright National Electrical Manufacturers Association
Provided by IHS under license with NEMA
No reproduction or networking permitted without license from IHS
Not for Resale

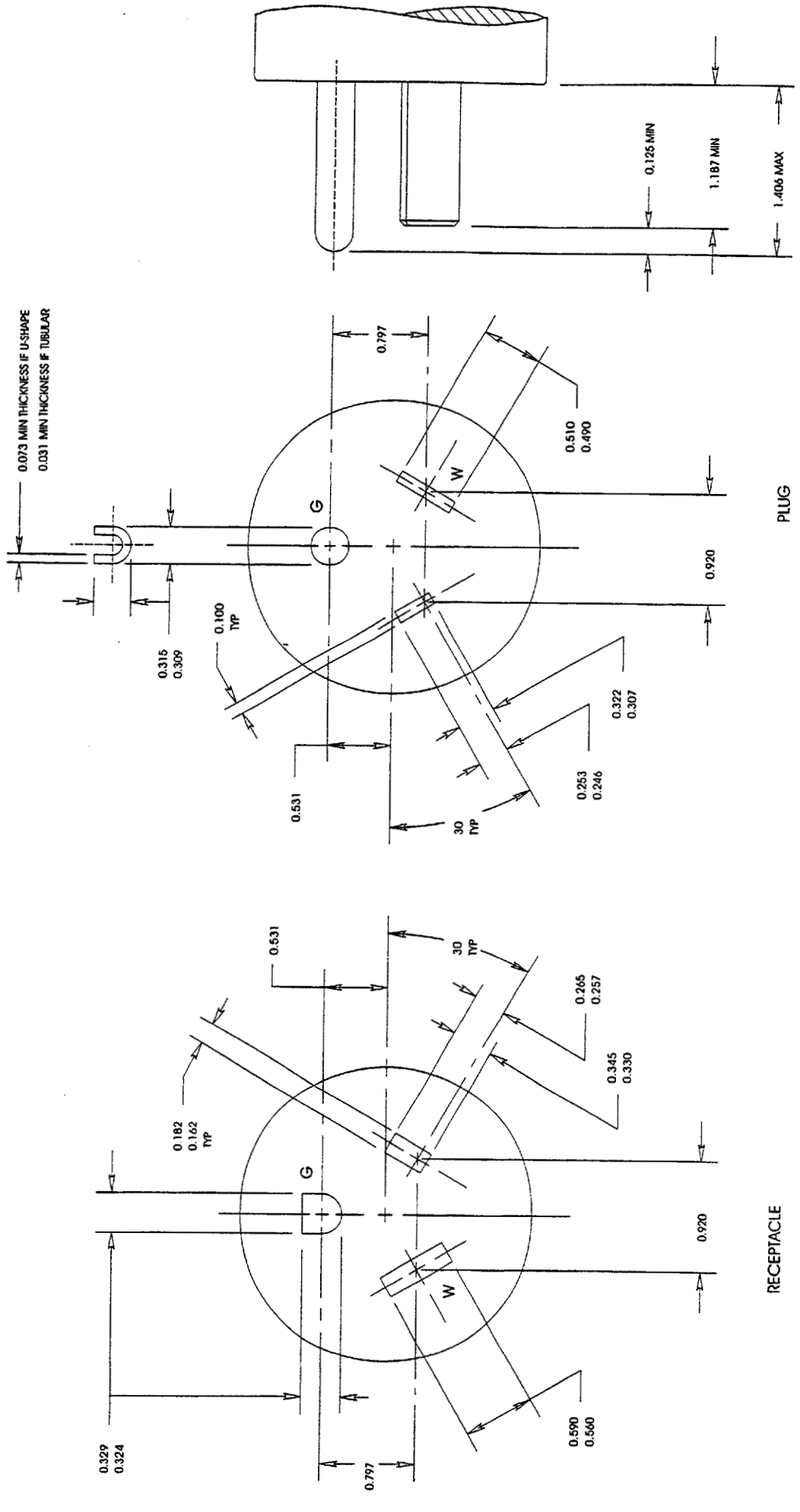

FIGURE 24-50
PLUG AND RECEPTACLE
347 volts ac, 50 amperes, 2 pole, 3 wire, Grounding type

Copyright National Electrical Manufacturers Association
Provided by IHS under license with NEMA
No reproduction or networking permitted without license from IHS

Not for Resale

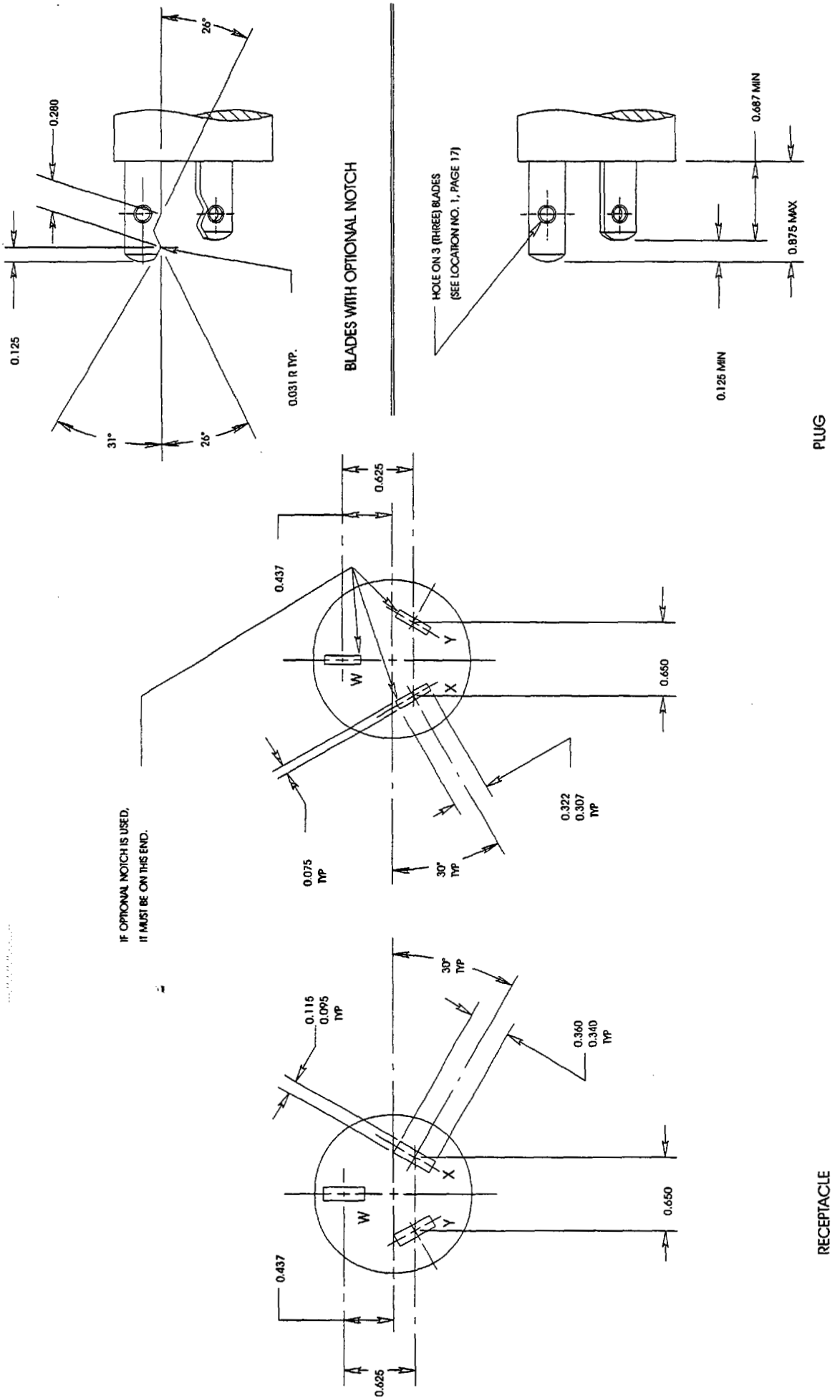

FIGURE 10-20
PLUG AND RECEPTACLE
125/250 volts, 20 amperes, 3 pole, 3 wire

Copyright National Electrical Manufacturers Association
Provided by IHS under license with NEMA
No reproduction or networking permitted without license from IHS

Not for Resale

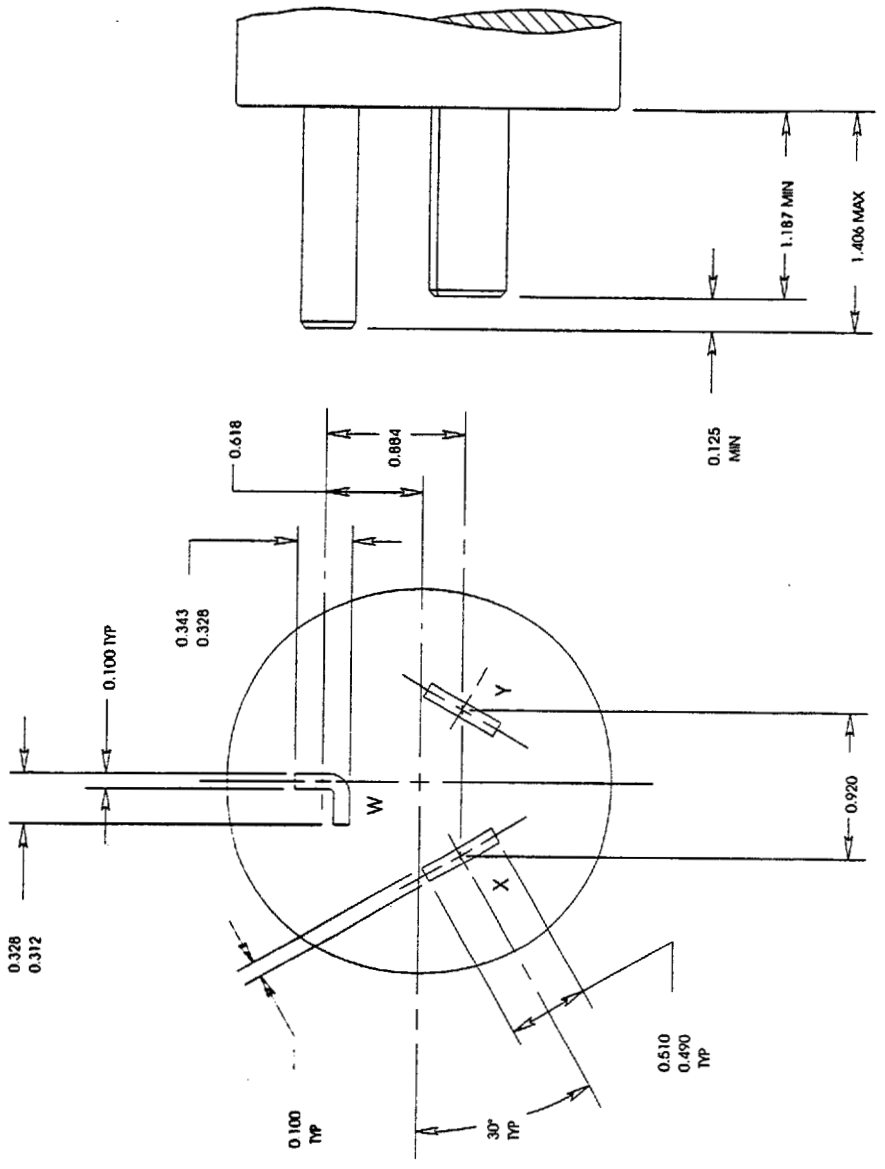

PLUG

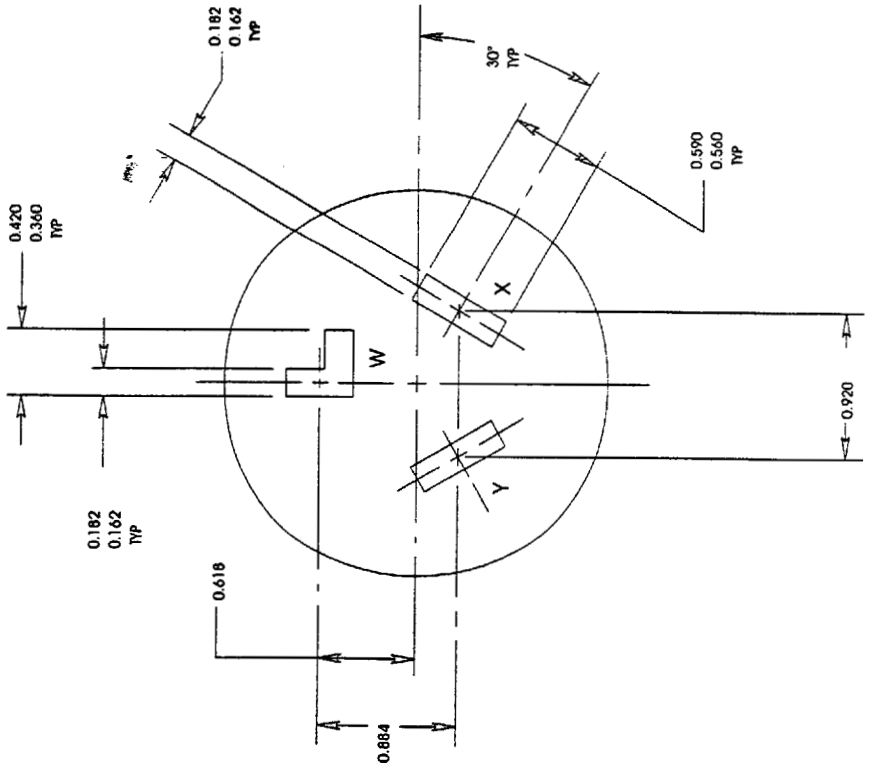

RECEPTACLE

FIGURE 10-30
PLUG AND RECEPTACLE
125/250 volts, 30 amperes, 3 pole, 3 wire

Copyright National Electrical Manufacturers Association
Provided by IHS under license with NEMA
No reproduction or networking permitted without license from IHS

Not for Resale

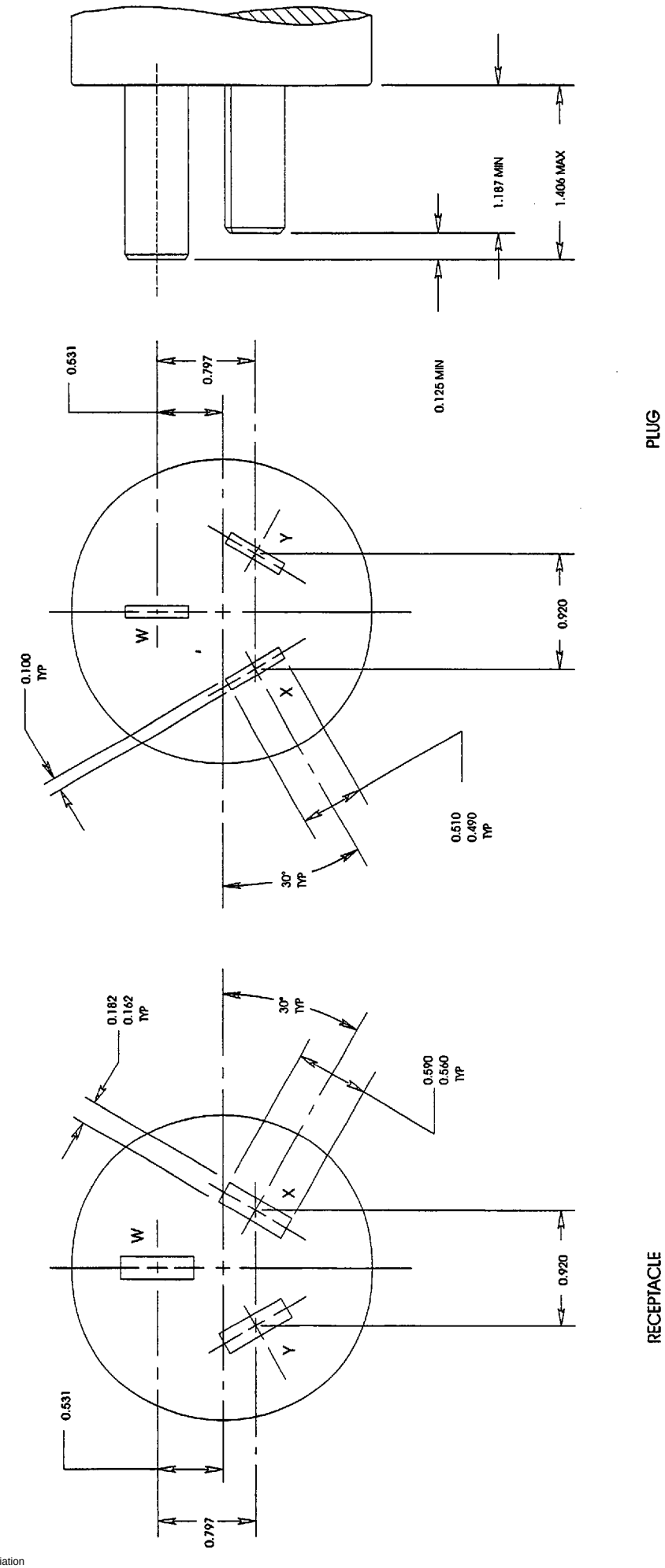

FIGURE 10-50
PLUG AND RECEPTACLE
125/250 volts, 50 amperes, 3 pole, 3 wire

Copyright National Electrical Manufacturers Association
Provided by IHS under license with NEMA
No reproduction or networking permitted without license from IHS

Not for Resale

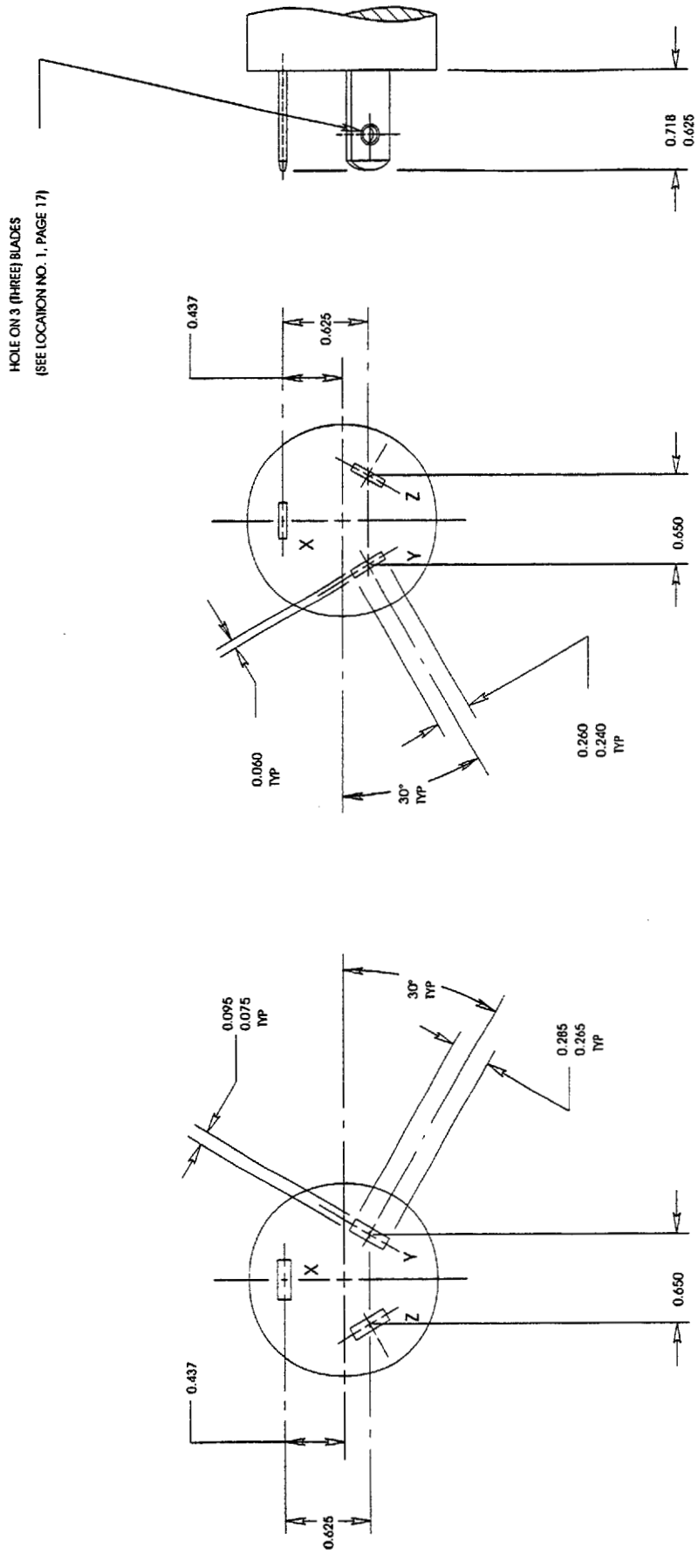

FIGURE 11-15
PLUG AND RECEPTACLE
250 volts, 15 amperes, 3 phase, 3 pole, 3 wire

Copyright National Electrical Manufacturers Association
Provided by IHS under license with NEMA
No reproduction or networking permitted without license from IHS

Not for Resale

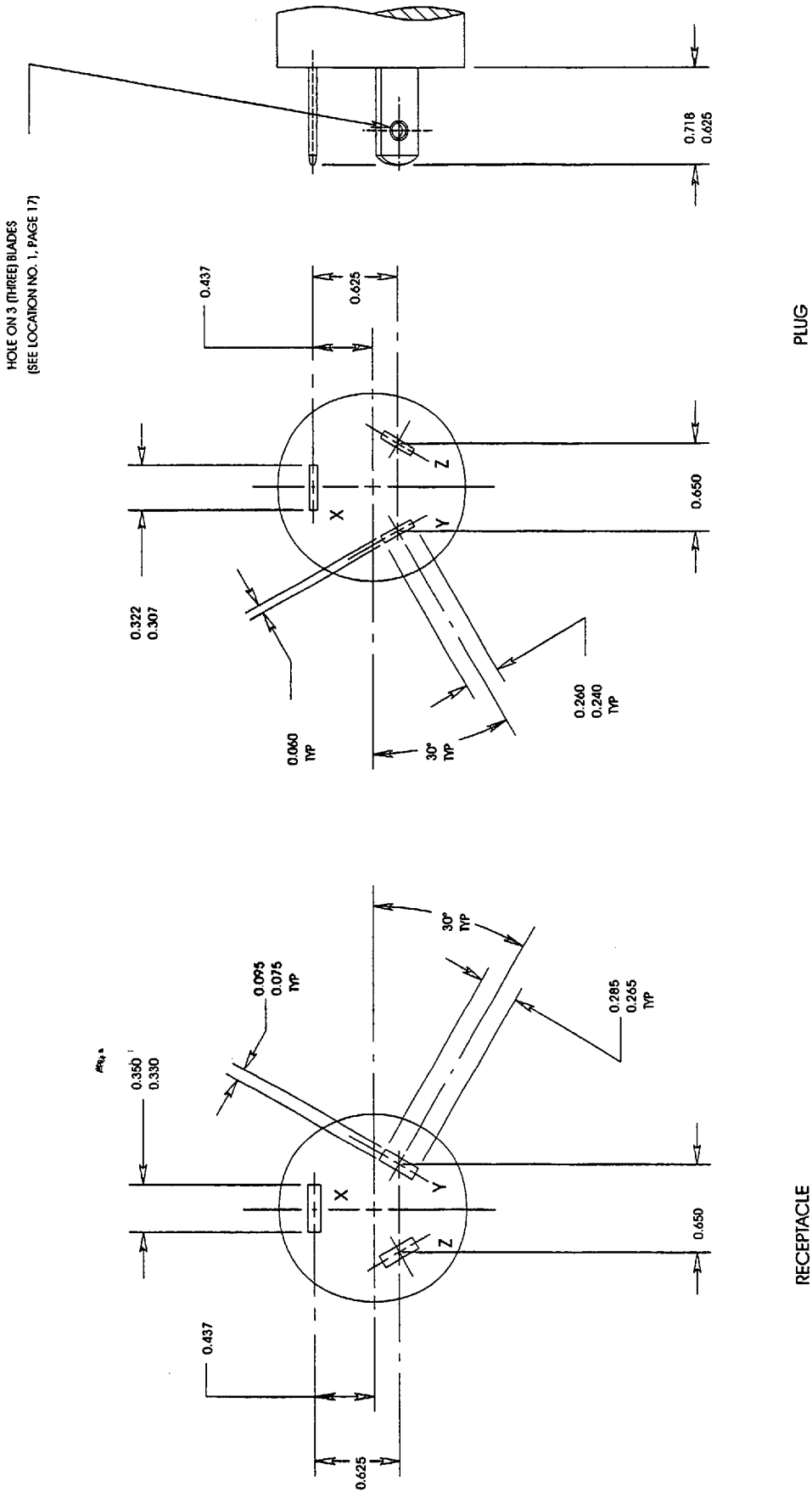

FIGURE 11-20
PLUG AND RECEPTACLE
250 volts, 20 amperes, 3 phase, 3 pole, 3 wire

Copyright National Electrical Manufacturers Association
Provided by IHS under license with NEMA
No reproduction or networking permitted without license from IHS
Not for Resale

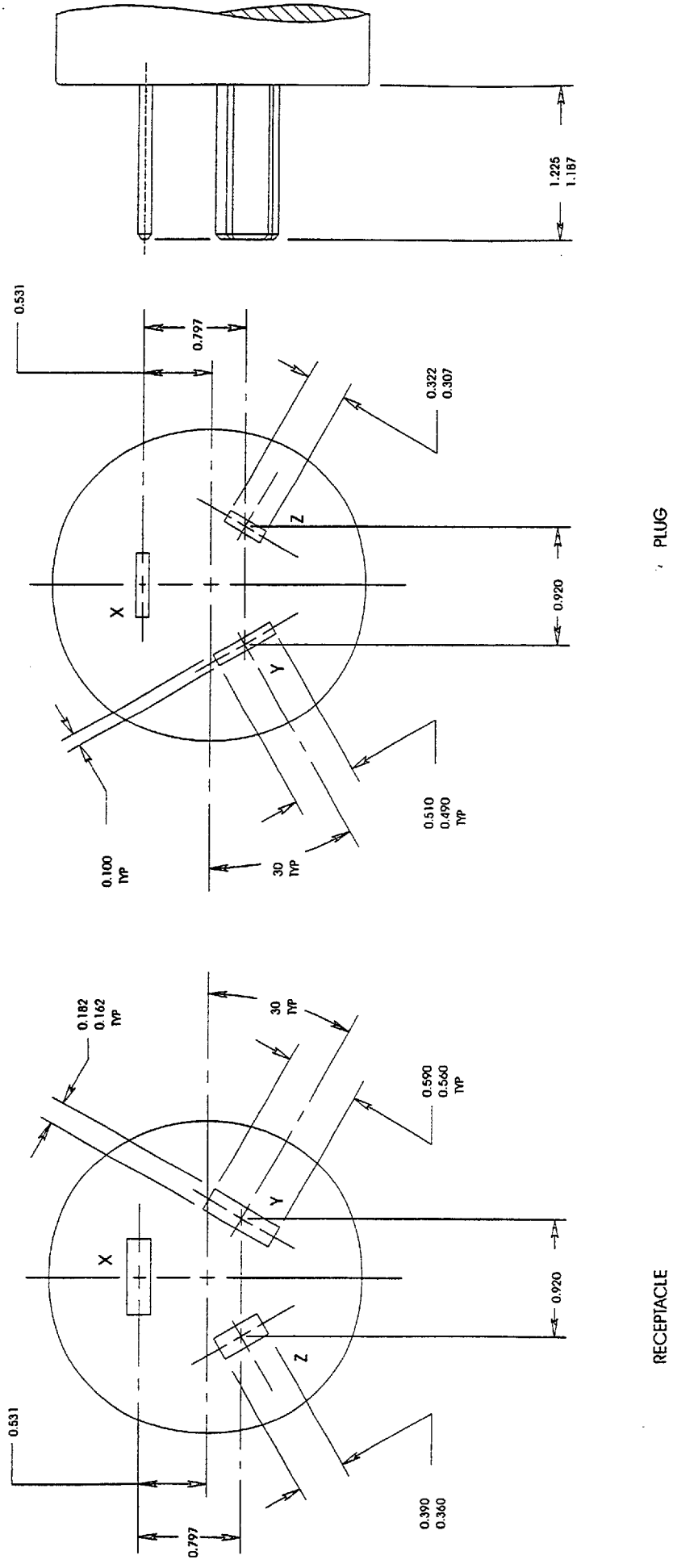

FIGURE 11-30
PLUG AND RECEPTACLE
250 volts, 30 amperes, 3 phase, 3 pole, 3 wire

Copyright National Electrical Manufacturers Association
Provided by IHS under license with NEMA
No reproduction or networking permitted without license from IHS

Not for Resale

STD.NEMA WD 6-ENGL 1997 ■ 6470247 0514559 755 ■

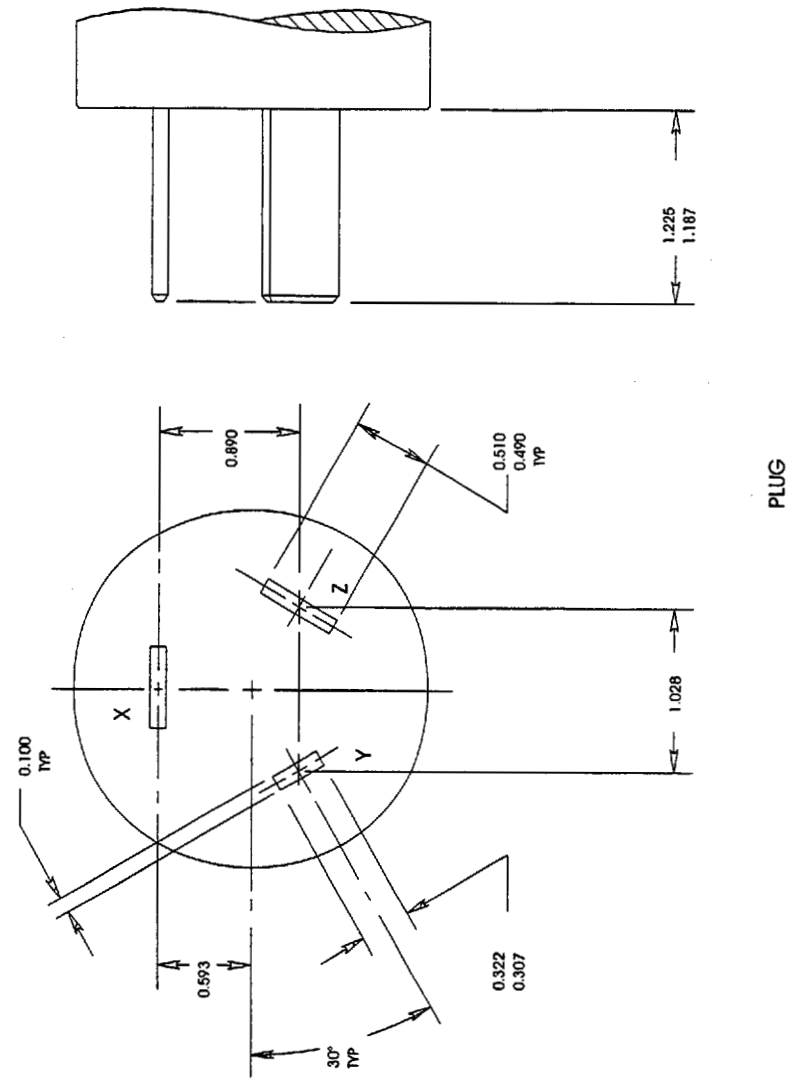

FIGURE 11-50
PLUG AND RECEPTACLE
250 volts, 50 amperes, 3 phase, 3 pole, 3 wire

Copyright National Electrical Manufacturers Association
Provided by IHS under license with NEMA
No reproduction or networking permitted without license from IHS
Not for Resale

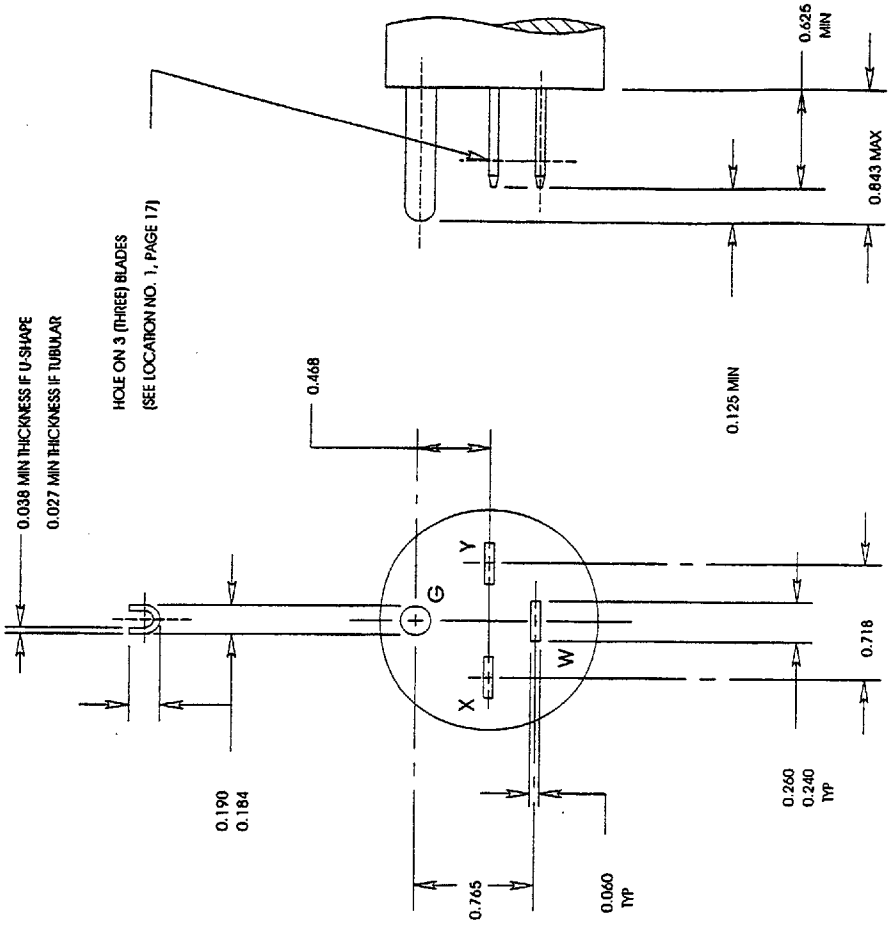

PLUG

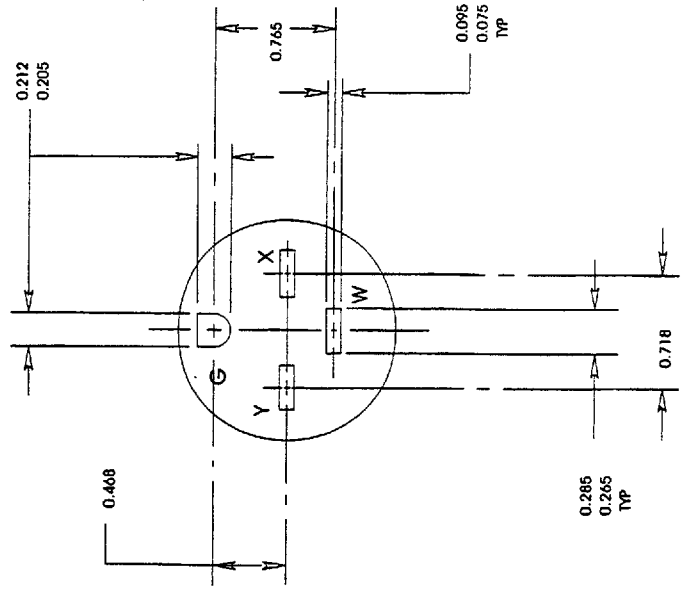

RECEPTACLE

FIGURE 14-15
PLUG AND RECEPTACLE
125/250 volts, 15 amperes, 3 pole, 4 wire, Grounding type

Copyright National Electrical Manufacturers Association
Provided by IHS under license with NEMA
No reproduction or networking permitted without license from IHS

Not for Resale

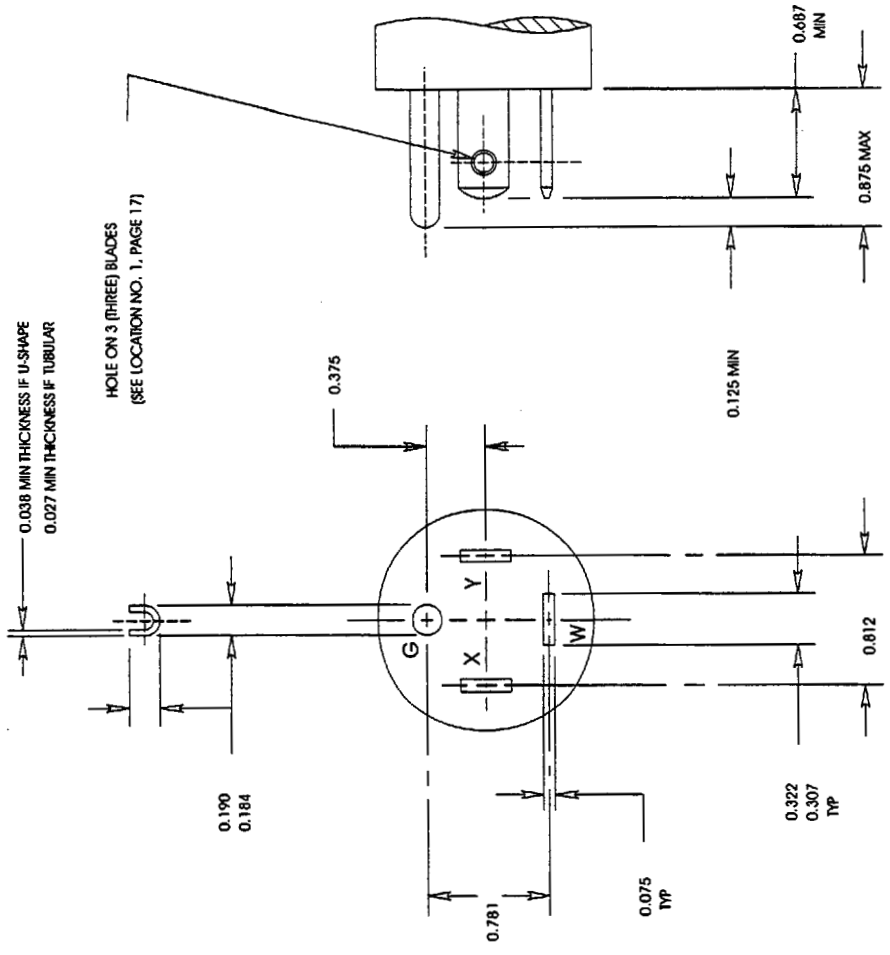

PLUG

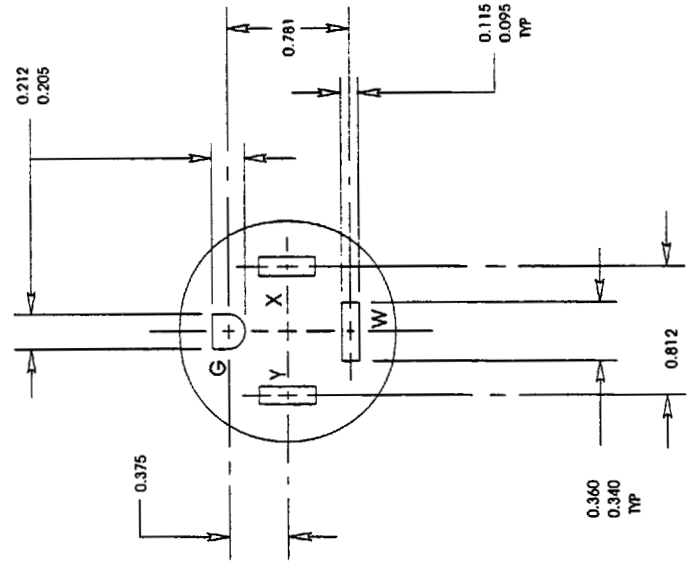

RECEPTACLE

FIGURE 14-20
PLUG AND RECEPTACLE
125/250 volts, 20 amperes, 3 pole, 4 wire, Grounding type

Copyright National Electrical Manufacturers Association
Provided by IHS under license with NEMA
No reproduction or networking permitted without license from IHS
Not for Resale

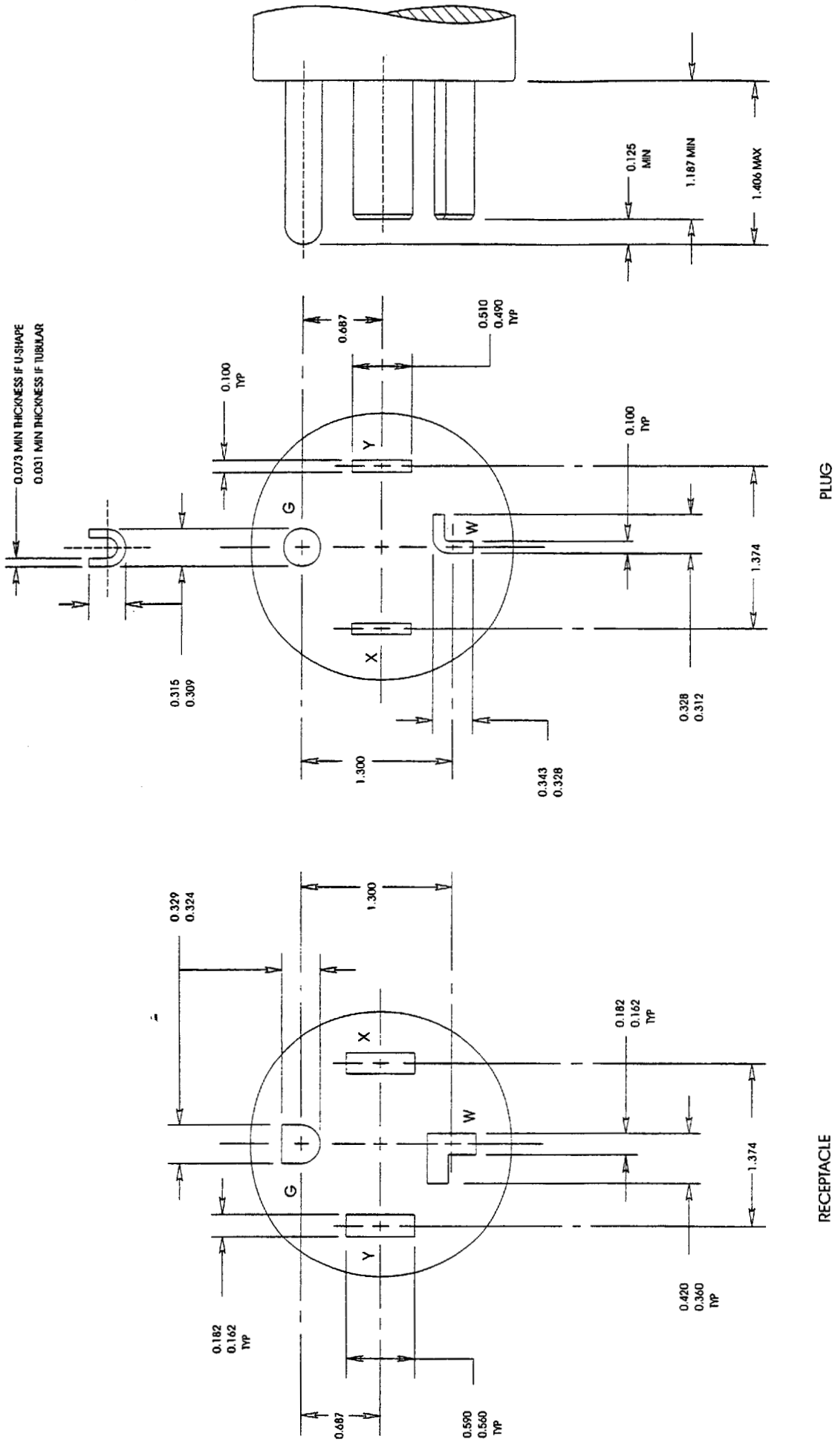

FIGURE 14-30
PLUG AND RECEPTACLE
125/250 volts, 30 amperes, 3 pole, 4 wire, Grounding type

Copyright National Electrical Manufacturers Association
Provided by IHS under license with NEMA
No reproduction or networking permitted without license from IHS

Not for Resale

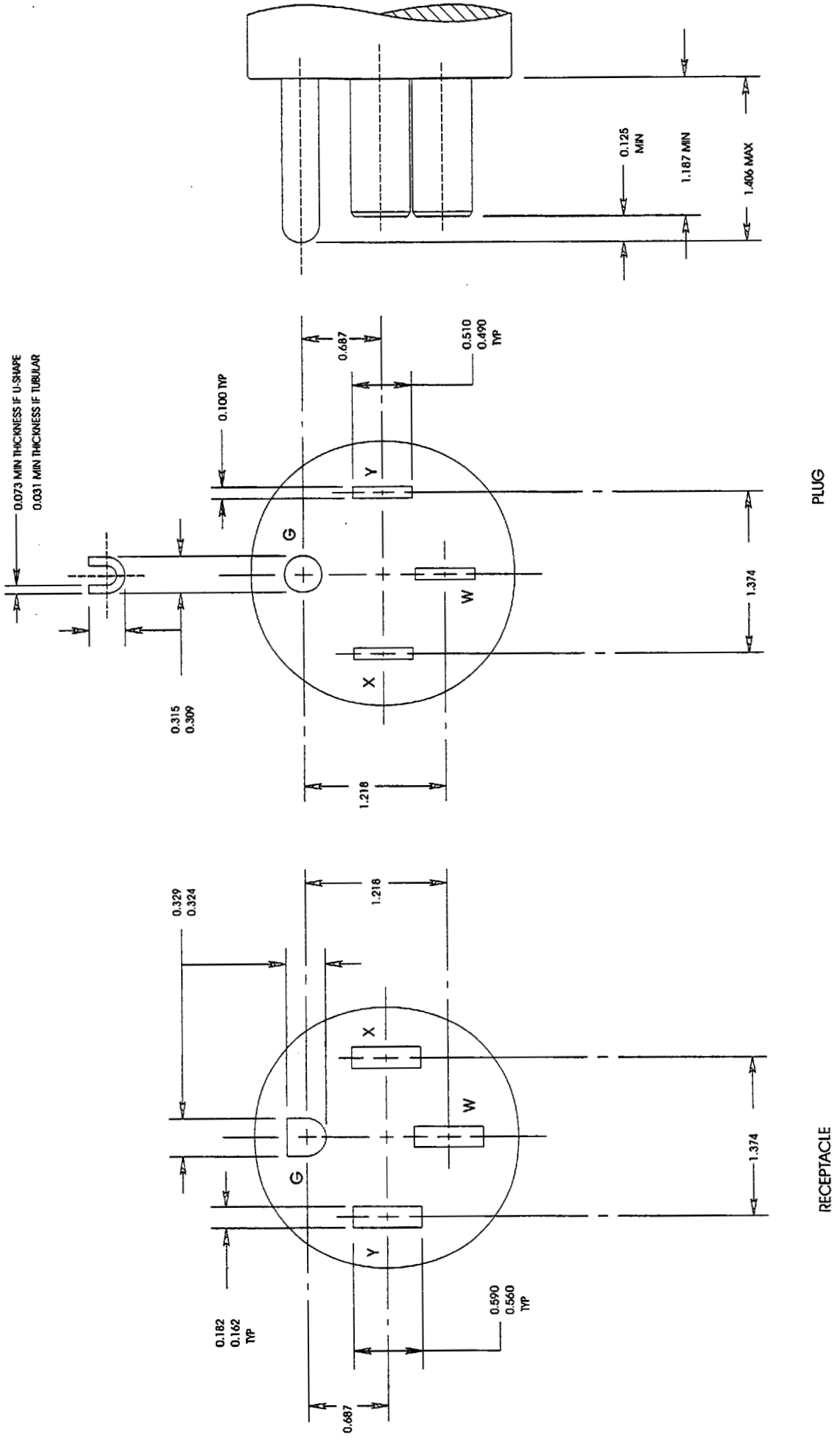

FIGURE 14-50
PLUG AND RECEPTACLE
125/250 volts, 50 amperes, 3 pole, 4 wire, Grounding type

Copyright National Electrical Manufacturers Association
Provided by IHS under license with NEMA
No reproduction or networking permitted without license from IHS

Not for Resale

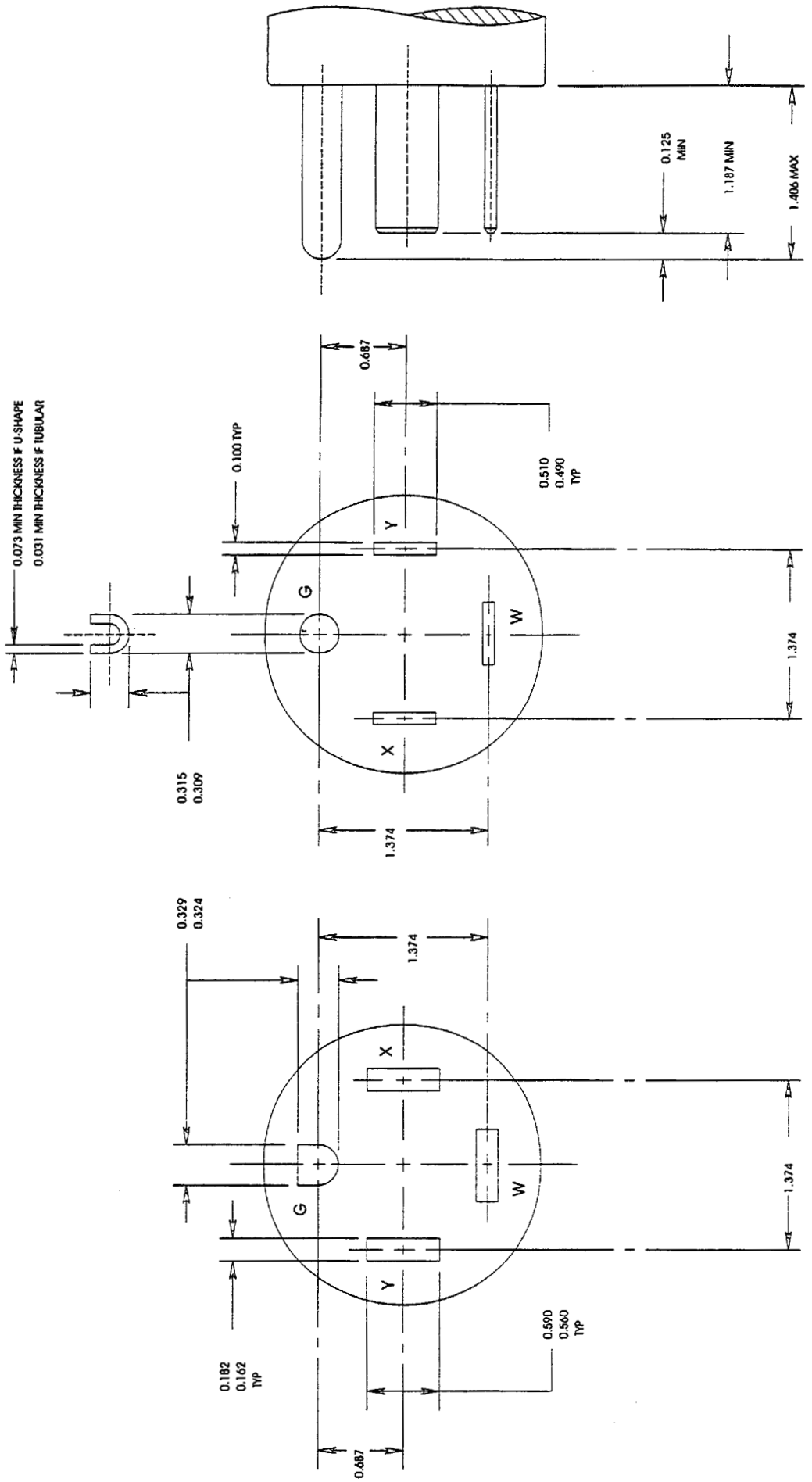

FIGURE 14-60
PLUG AND RECEPTACLE
125/250 volts, 60 amperes, 3 pole, 4 wire, Grounding type

Copyright National Electrical Manufacturers Association
Provided by IHS under license with NEMA
No reproduction or networking permitted without license from IHS

Not for Resale

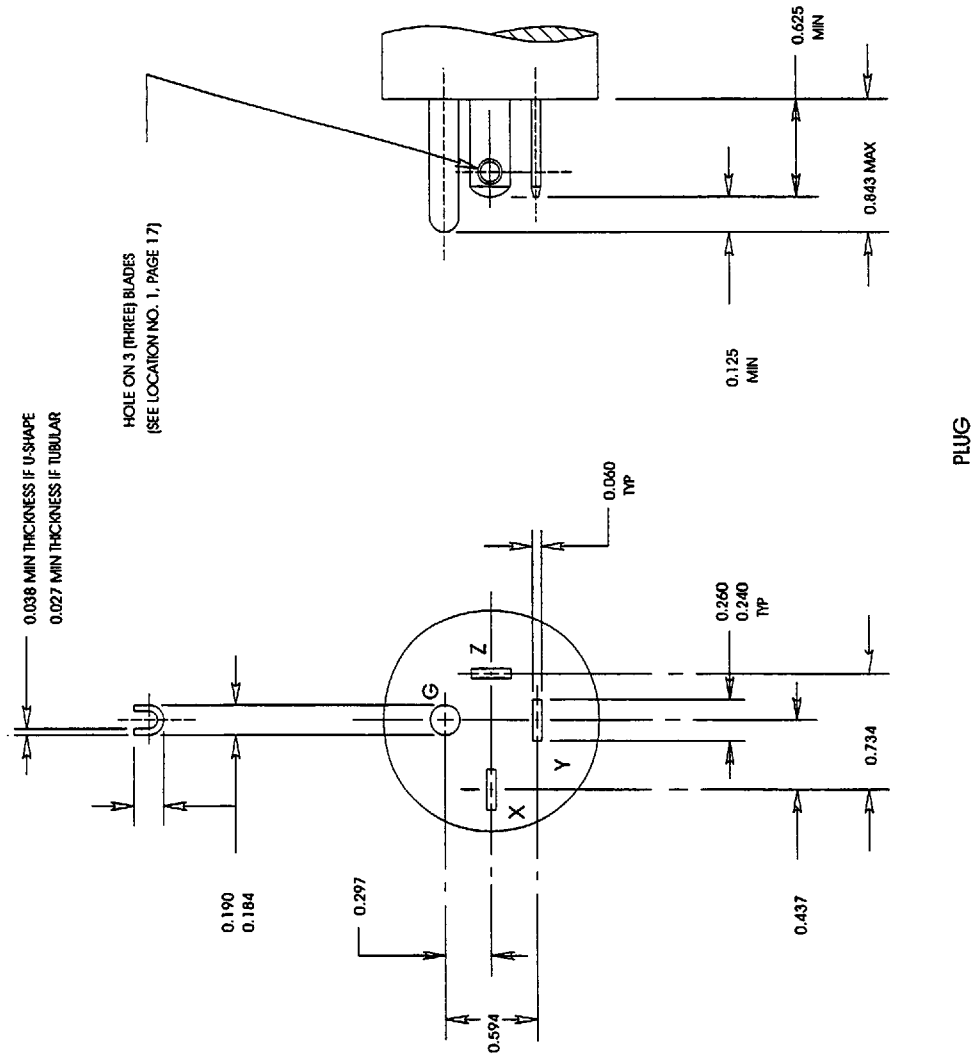

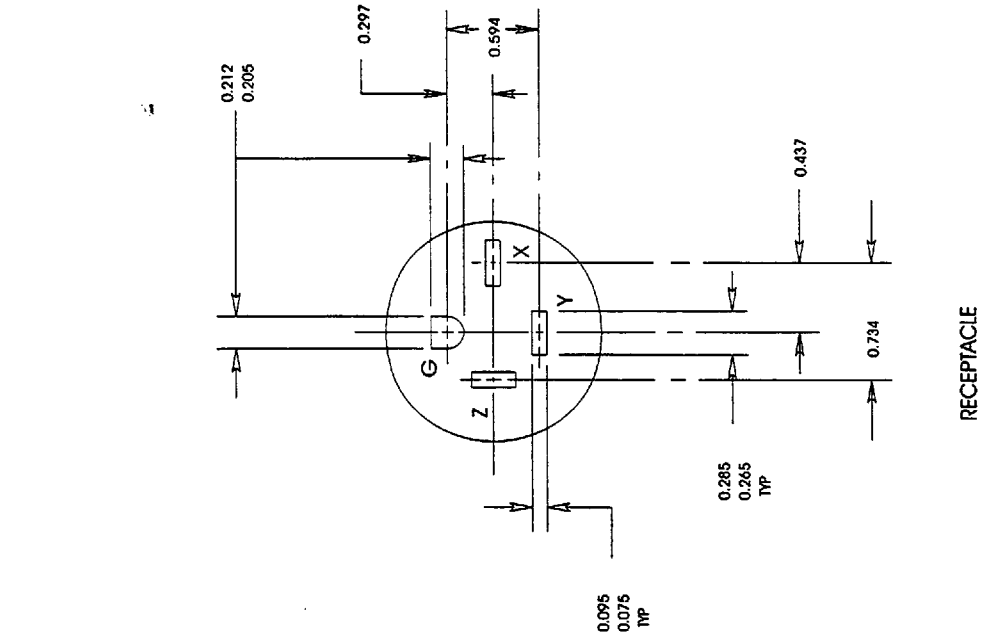

FIGURE 15-15
PLUG AND RECEPTACLE
250 volts, 15 amperes, 3 phase, 3 pole, 4 wire, grounding type

Copyright National Electrical Manufacturers Association
Provided by IHS under license with NEMA
No reproduction or networking permitted without license from IHS
Not for Resale

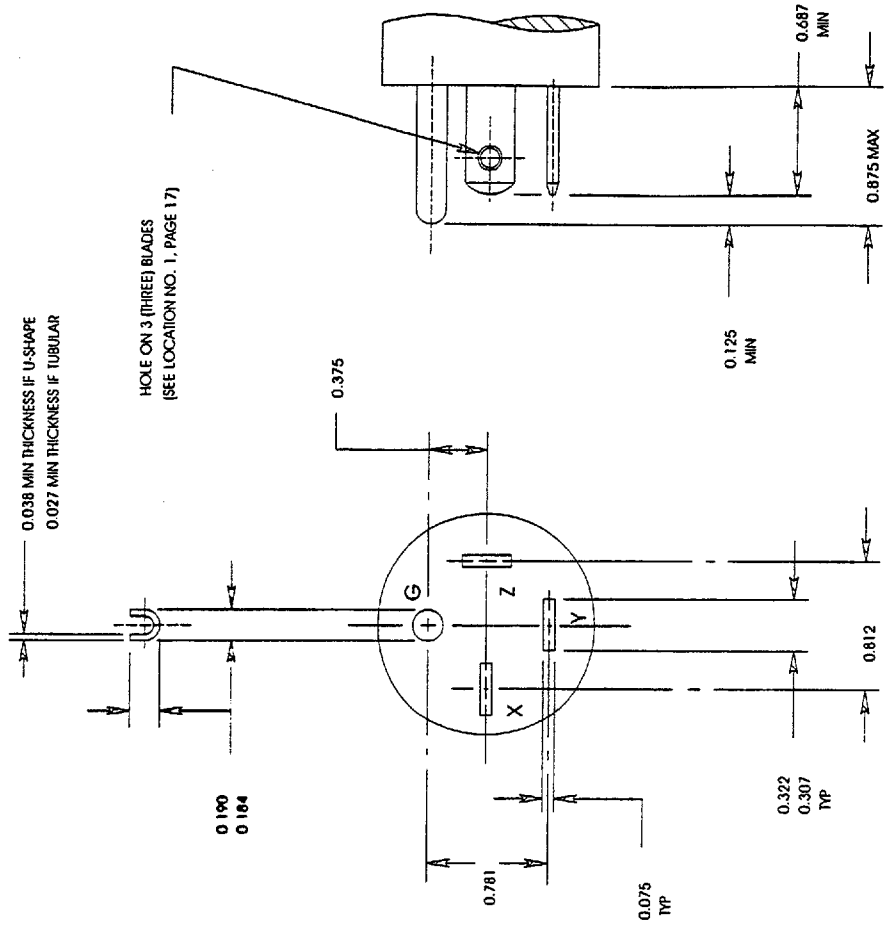

PLUG

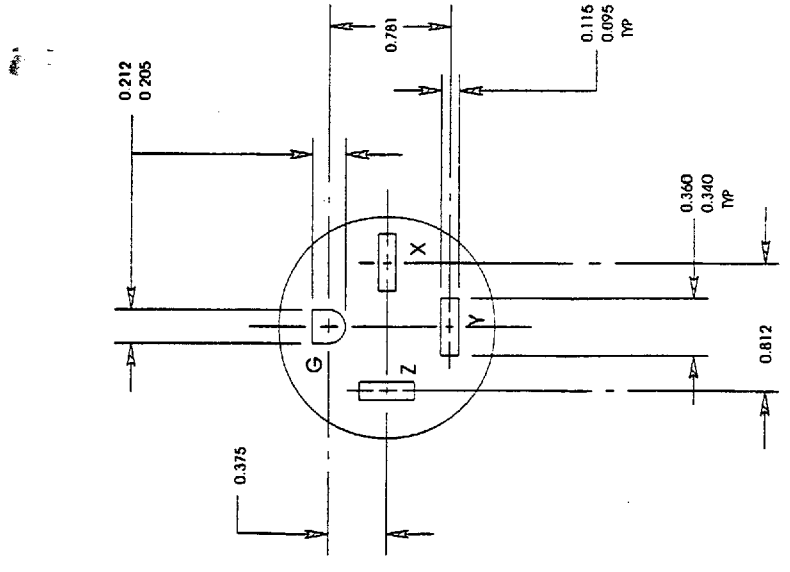

RECEPTACLE

FIGURE 15-20
PLUG AND RECEPTACLE
250 volts, 20 amperes, 3 phase, 3 pole, 4 wire, Grounding type

Copyright National Electrical Manufacturers Association
Provided by IHS under license with NEMA
No reproduction or networking permitted without license from IHS

Not for Resale

STD.NEMA WD 6-ENGL 1997 ■ 6470247 0514567 821 ■

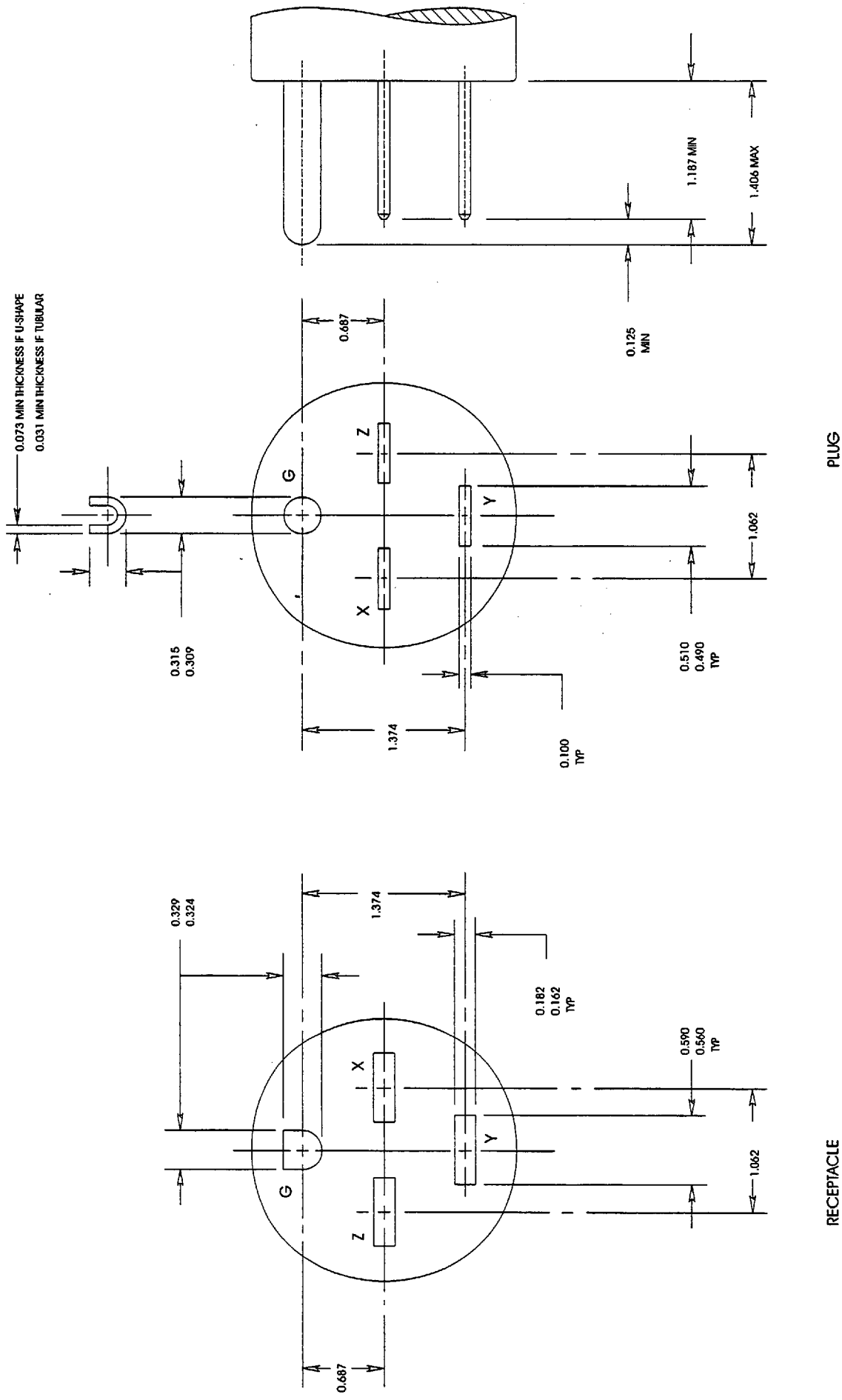

FIGURE 15-30
PLUG AND RECEPTACLE
250 volts, 30 amperes, 3 phase, 3 pole, 4 wire, Grounding type

Copyright National Electrical Manufacturers Association
Provided by IHS under license with NEMA
No reproduction or networking permitted without license from IHS
Not for Resale

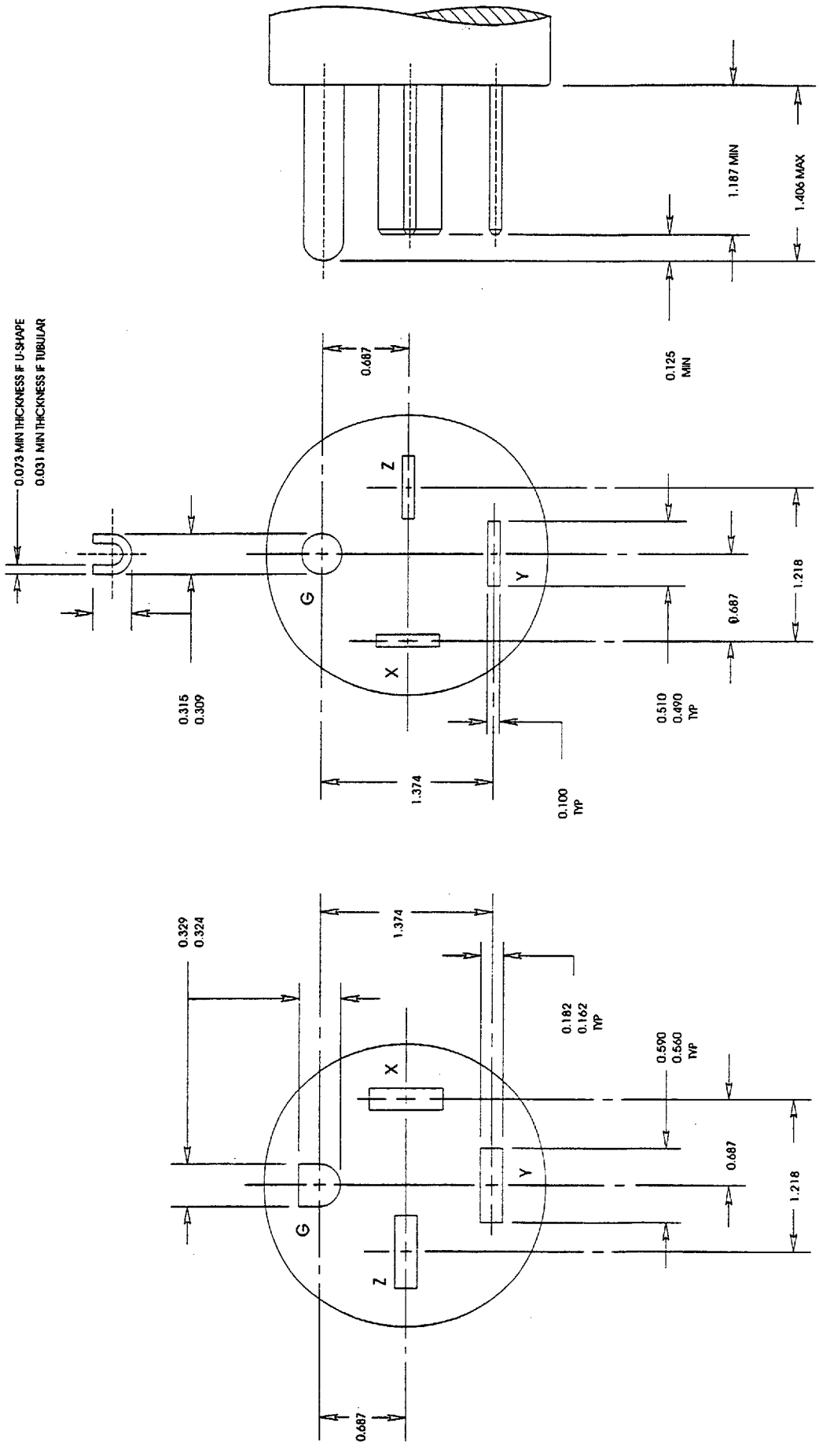

FIGURE 15-50
PLUG AND RECEPTACLE
250 volts, 50 amperes, 3 phase, 3 pole, 4 wire, Grounding type

Copyright National Electrical Manufacturers Association
Provided by IHS under license with NEMA
No reproduction or networking permitted without license from IHS

Not for Resale

STD.NEMA WD 6-ENGL 1997 ■ 6470247 0514569 6T4 ■

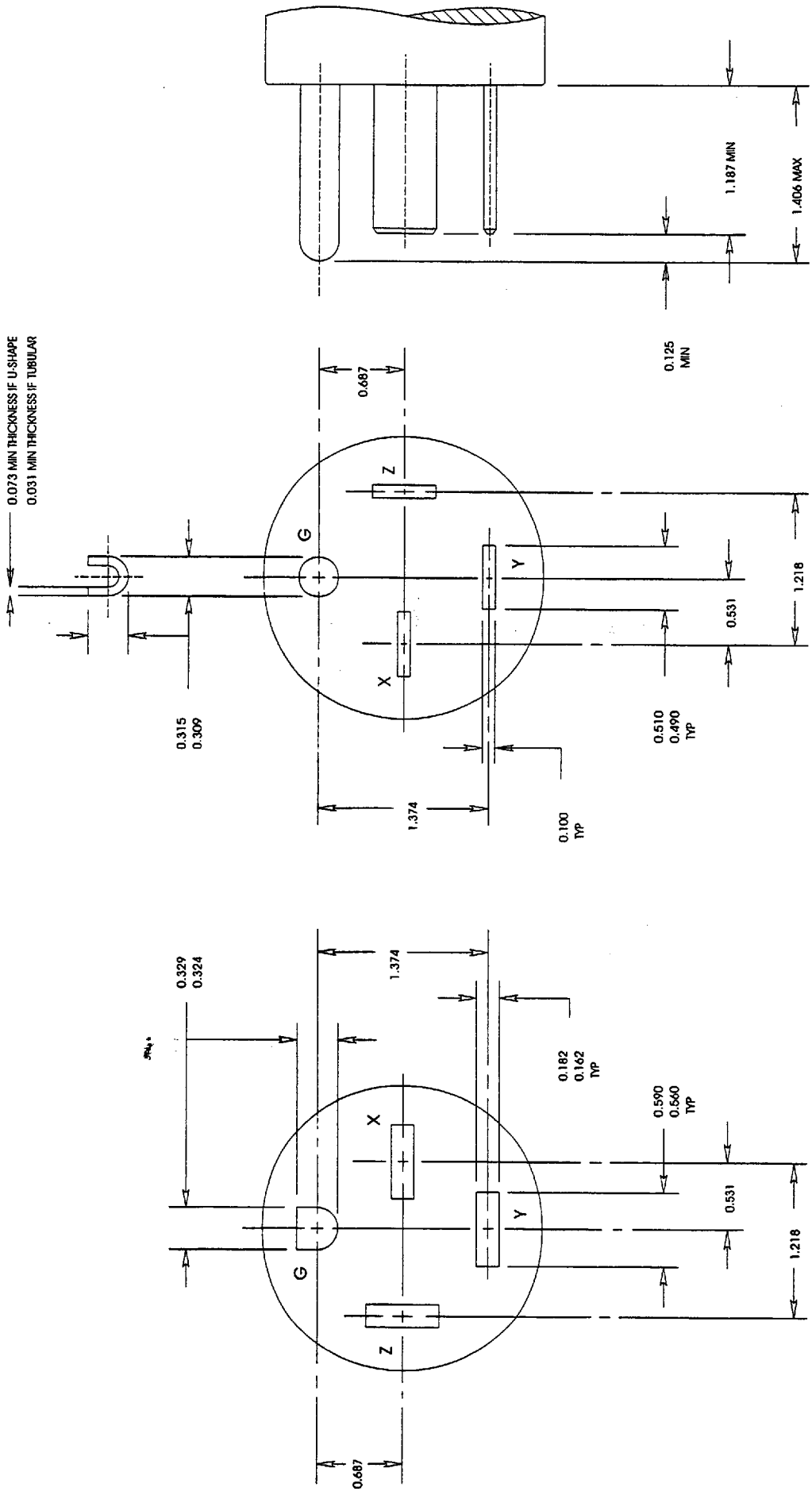

FIGURE 15-60
PLUG AND RECEPTACLE
250 volts, 60 amperes, 3 phase, 3 pole, 4 wire, Grounding type

Copyright National Electrical Manufacturers Association
Provided by IHS under license with NEMA
No reproduction or networking permitted without license from IHS
Not for Resale

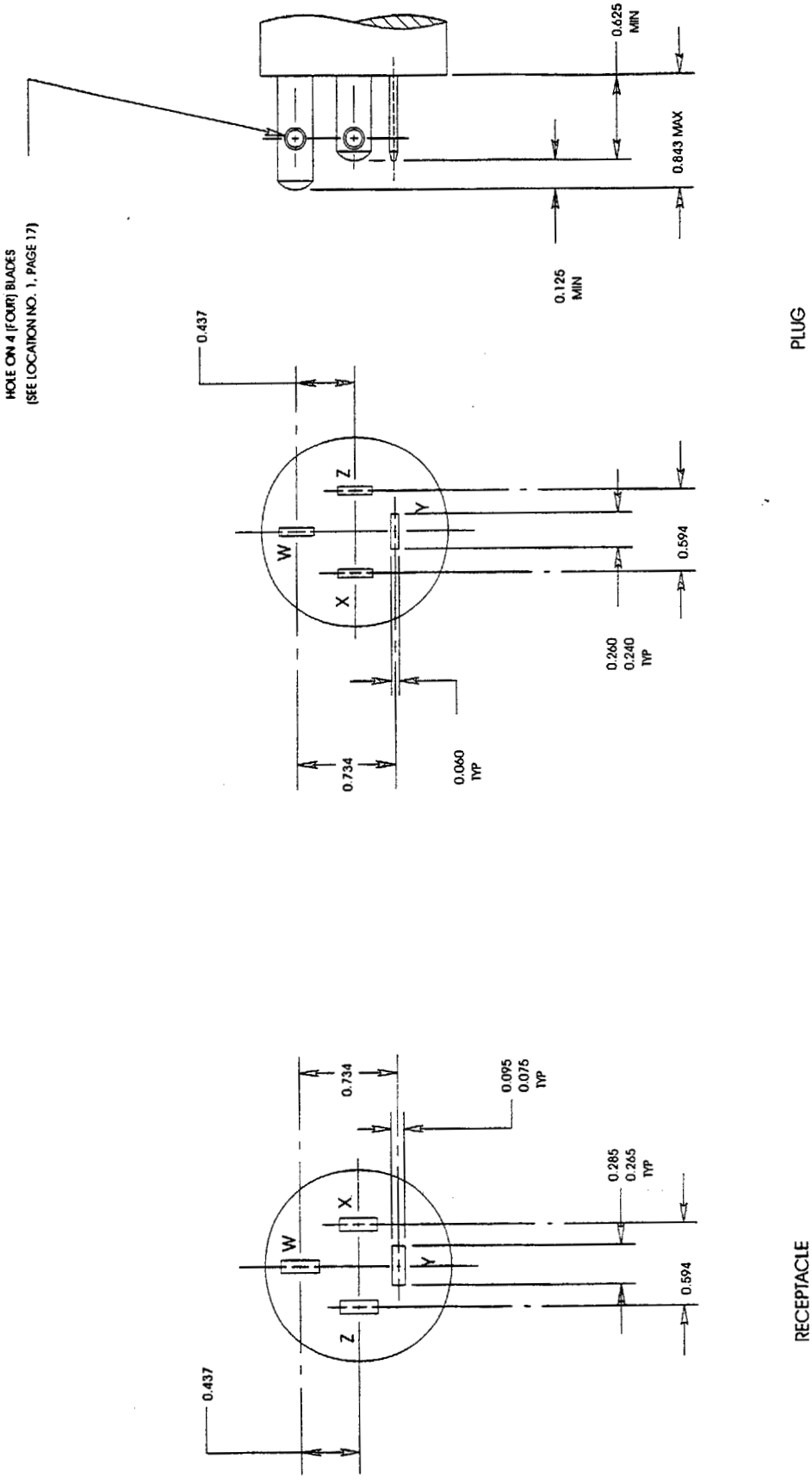

FIGURE 18-15
PLUG AND RECEPTACLE
120/208 volts, 15 amperes, 3 phase Y, 4 pole, 4 wire

Copyright National Electrical Manufacturers Association
Provided by IHS under license with NEMA
No reproduction or networking permitted without license from IHS
Not for Resale

6470247 0514571 252

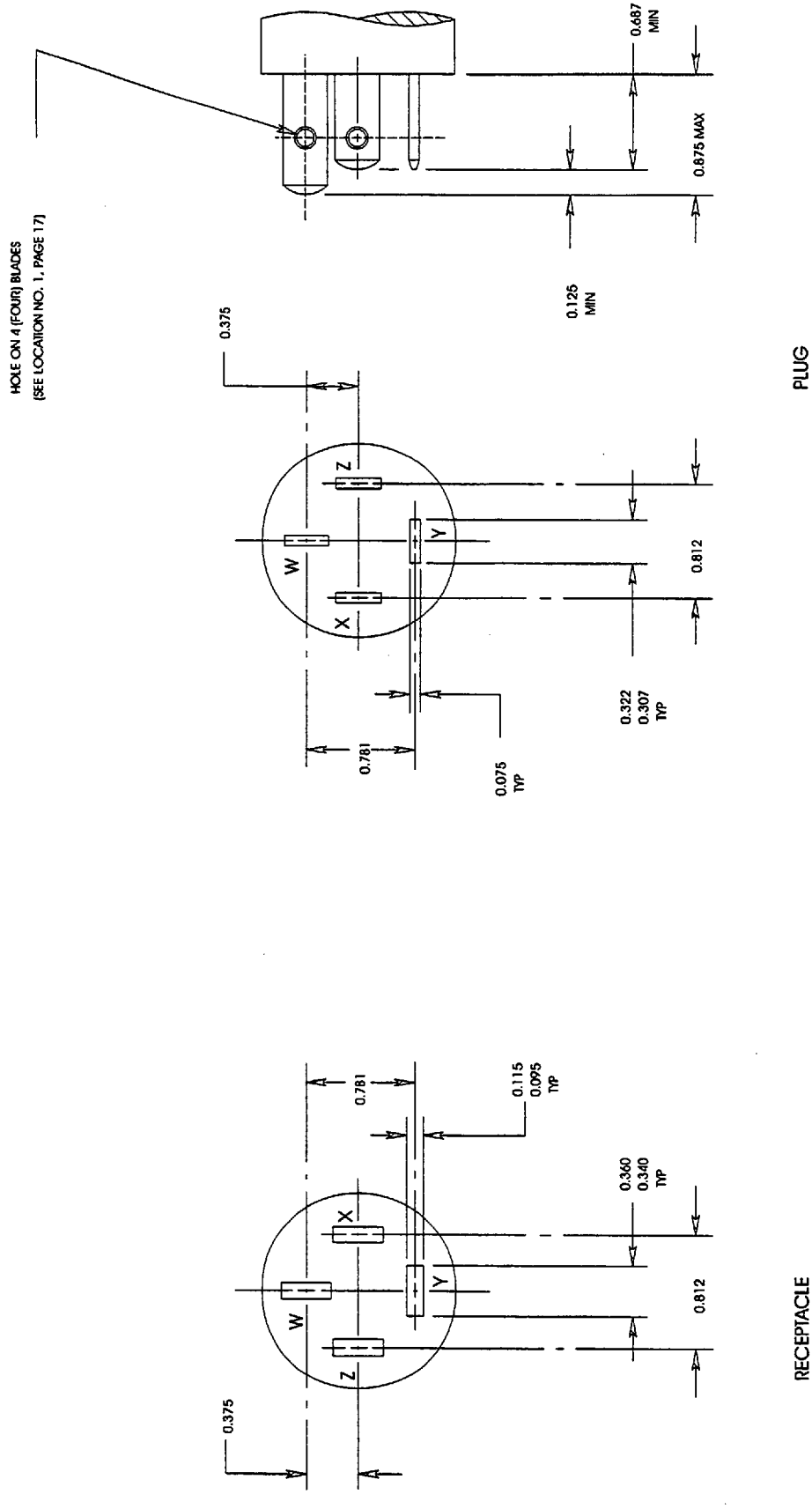

FIGURE 18-20
PLUG AND RECEPTACLE
120/208 volts, 20 amperes, 3 phase Y, 4 pole, 4 wire

Copyright National Electrical Manufacturers Association
Provided by IHS under license with NEMA
No reproduction or networking permitted without license from IHS
Not for Resale

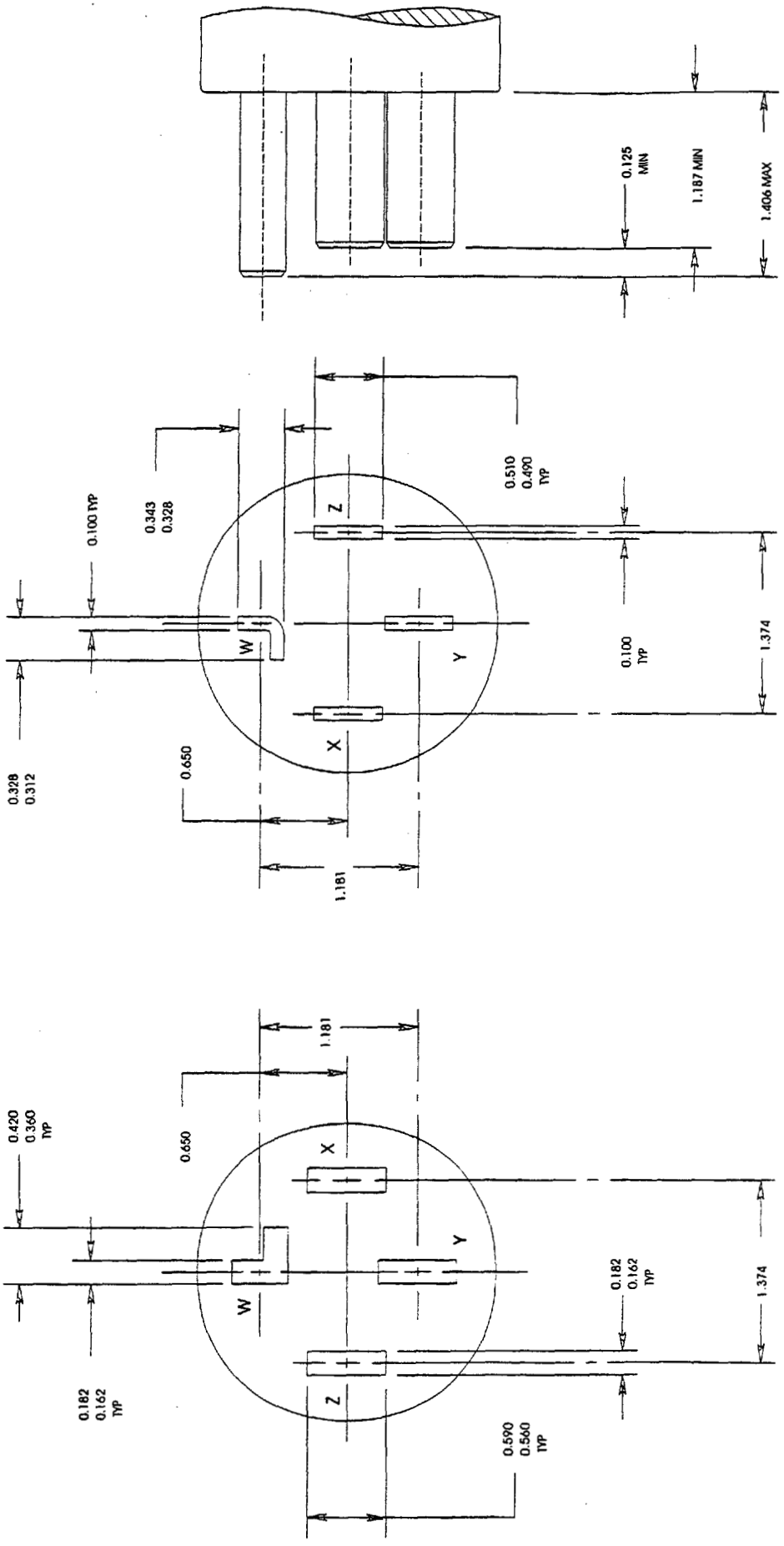

FIGURE 18-30
PLUG AND RECEPTACLE
120/208 volts, 30 amperes, 3 phase Y, 4 pole, 4 wire

Copyright National Electrical Manufacturers Association
Provided by IHS under license with NEMA
No reproduction or networking permitted without license from IHS

Not for Resale

STD.NEMA WD 6-ENGL 1997 ■ 6470247 0514573 025 ■

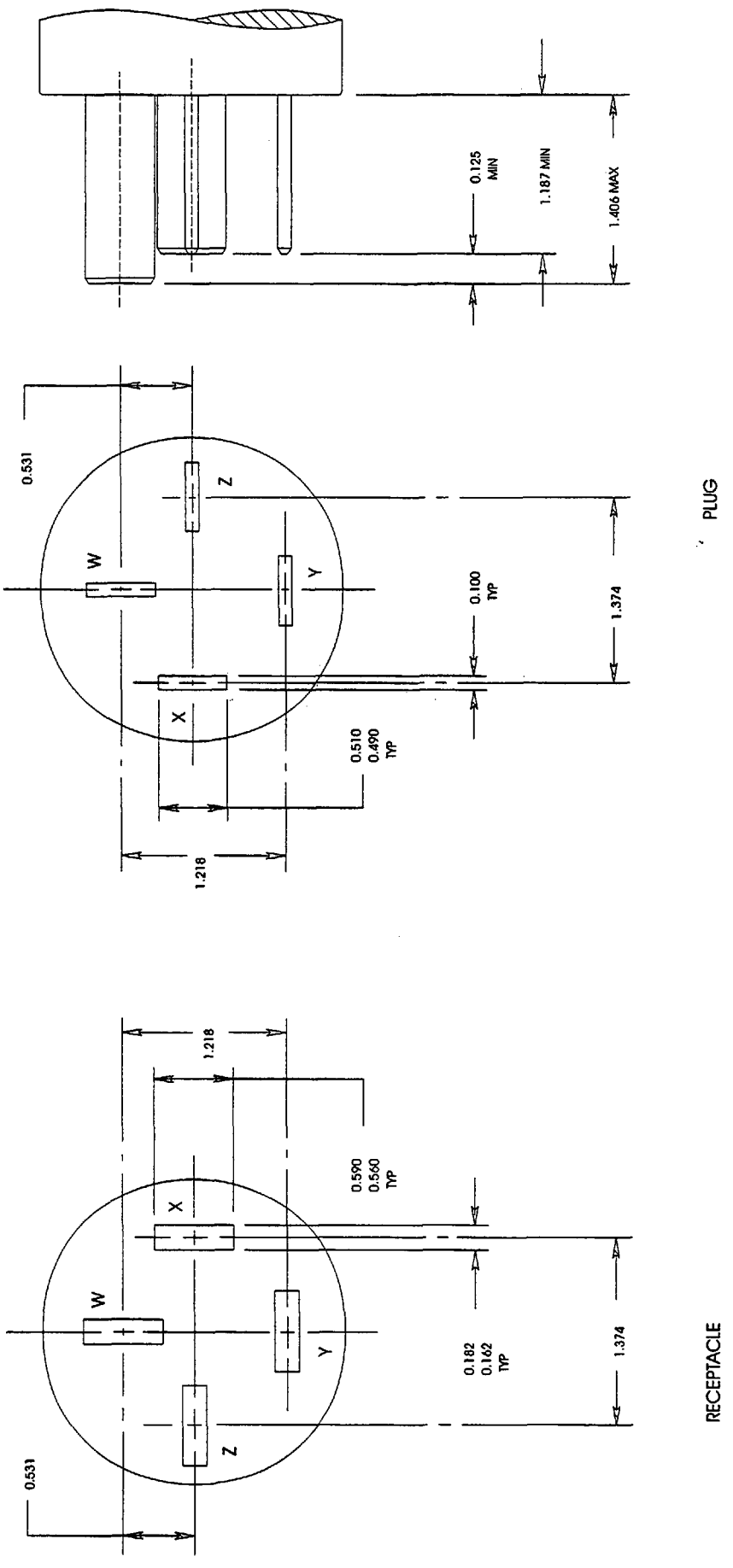

FIGURE 18-50
PLUG AND RECEPTACLE
120/208 volts, 50 amperes, 3 phase Y, 4 pole, 4 wire

Copyright National Electrical Manufacturers Association
Provided by IHS under license with NEMA
No reproduction or networking permitted without license from IHS
Not for Resale

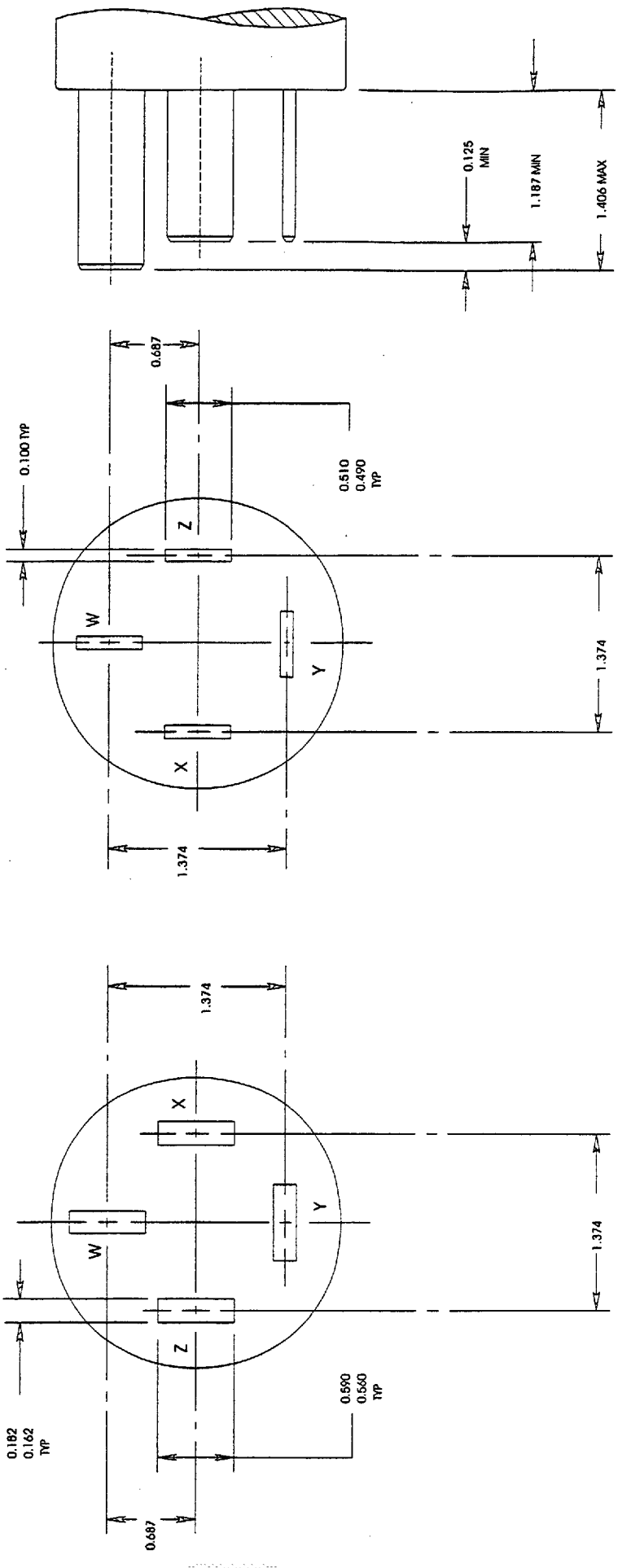

PLUG

RECEPTACLE

FIGURE 18-60
PLUG AND RECEPTACLE
120/208 volts, 60 amperes, 3 phase Y, 4 pole, 4 wire

Copyright National Electrical Manufacturers Association
Provided by IHS under license with NEMA
No reproduction or networking permitted without license from IHS

Not for Resale

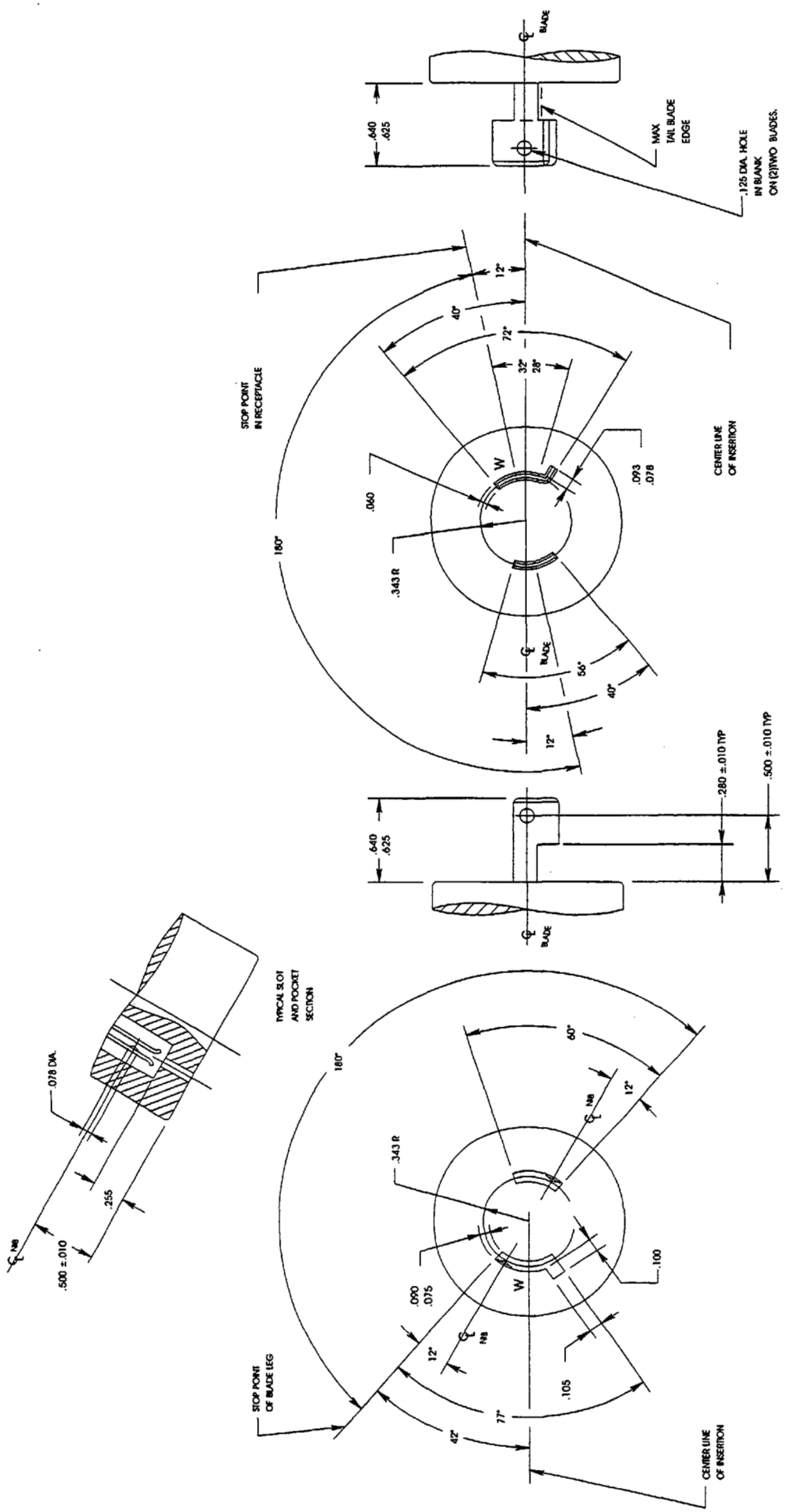

FIGURE L1-15
LOCKING TYPE PLUG AND RECEPTACLE
125 volts, 15 amperes, 2 pole, 2 wire

Copyright National Electrical Manufacturers Association
Provided by IHS under license with NEMA
No reproduction or networking permitted without license from IHS

Not for Resale

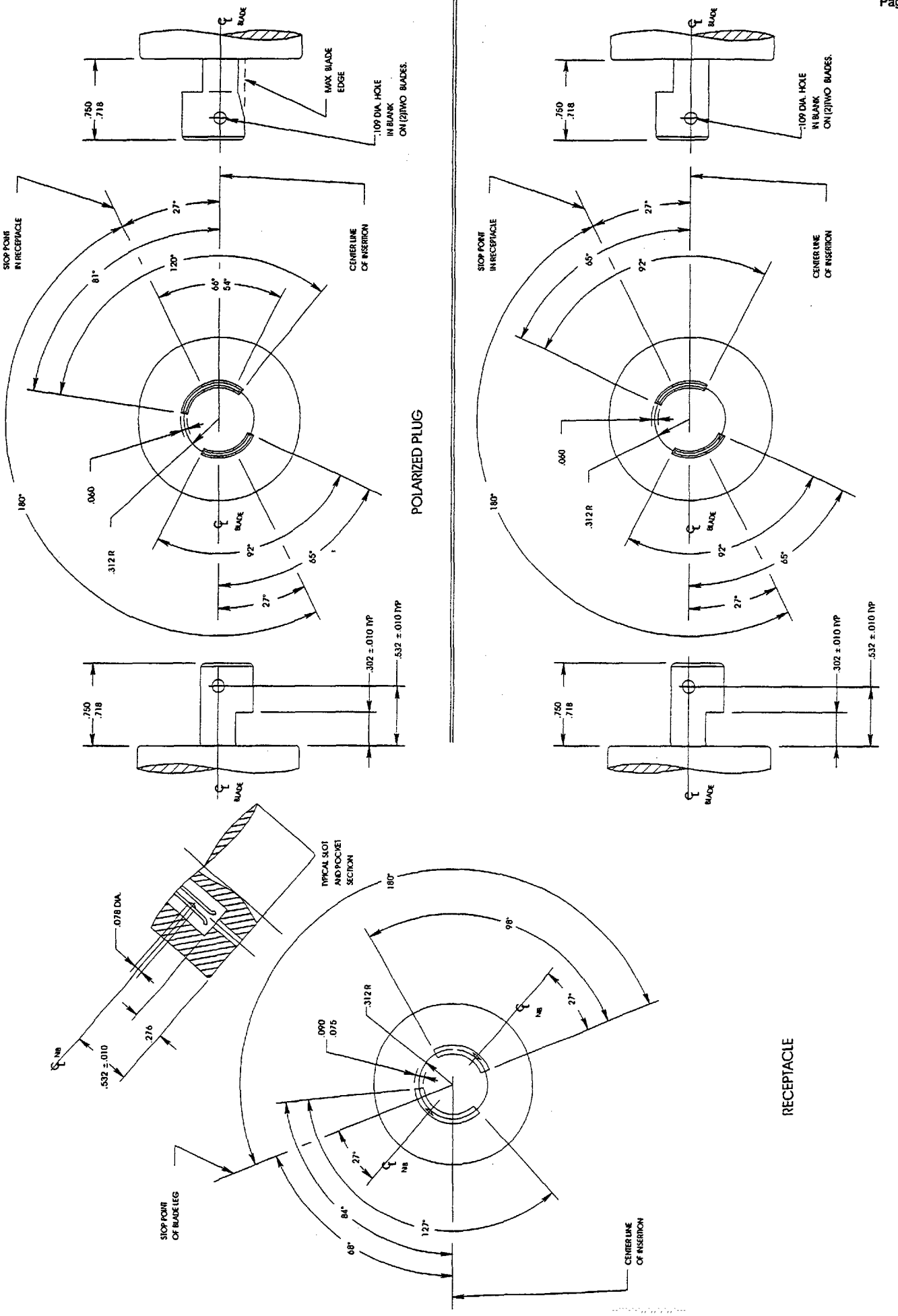

FIGURE 12-20
LOCKING TYPE PLUG AND RECEPTACLE
250 volts, 20 amperes, 2 pole, 2 wire

Copyright National Electrical Manufacturers Association
Provided by IHS under license with NEMA
No reproduction or networking permitted without license from IHS

Not for Resale

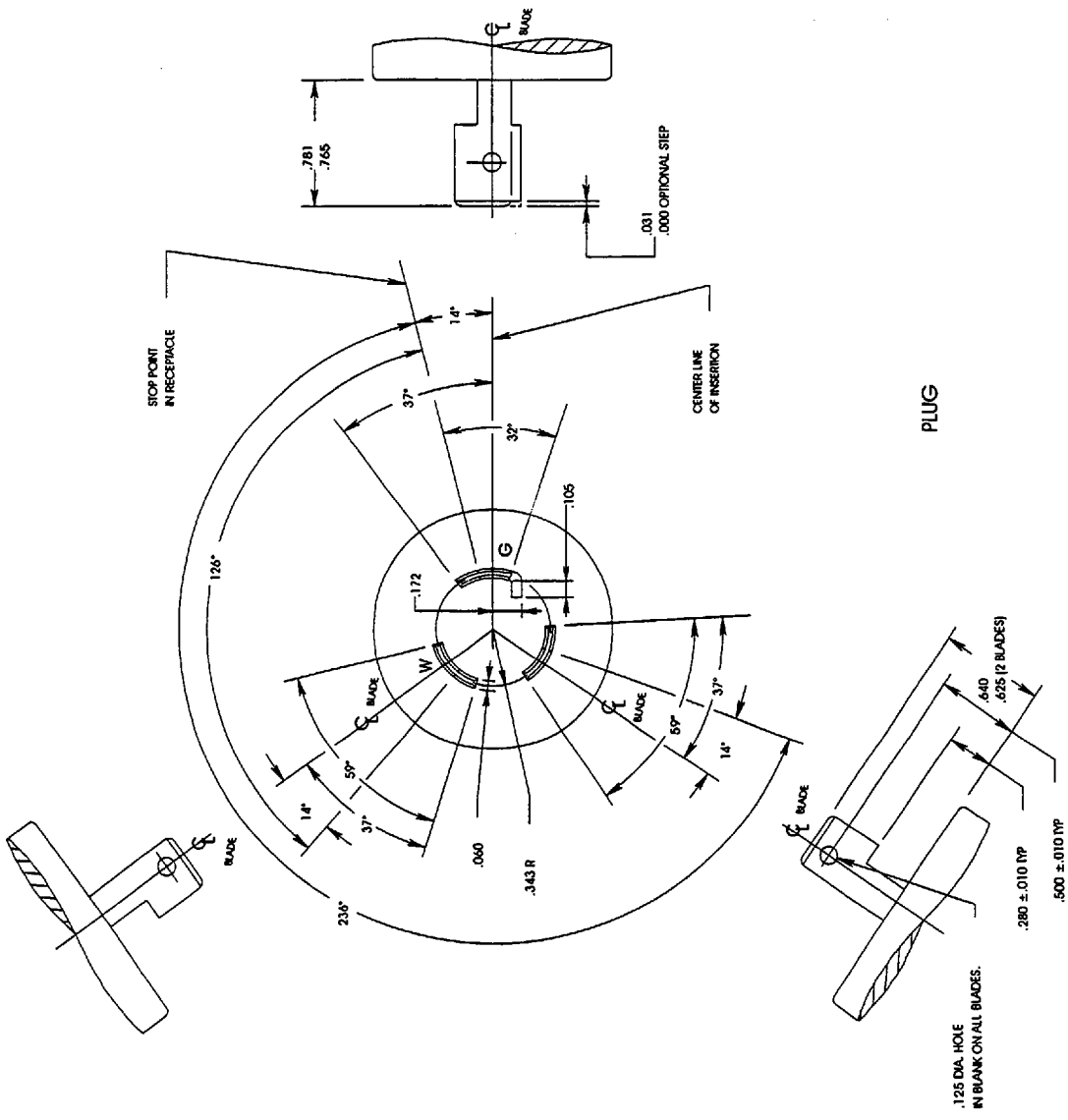

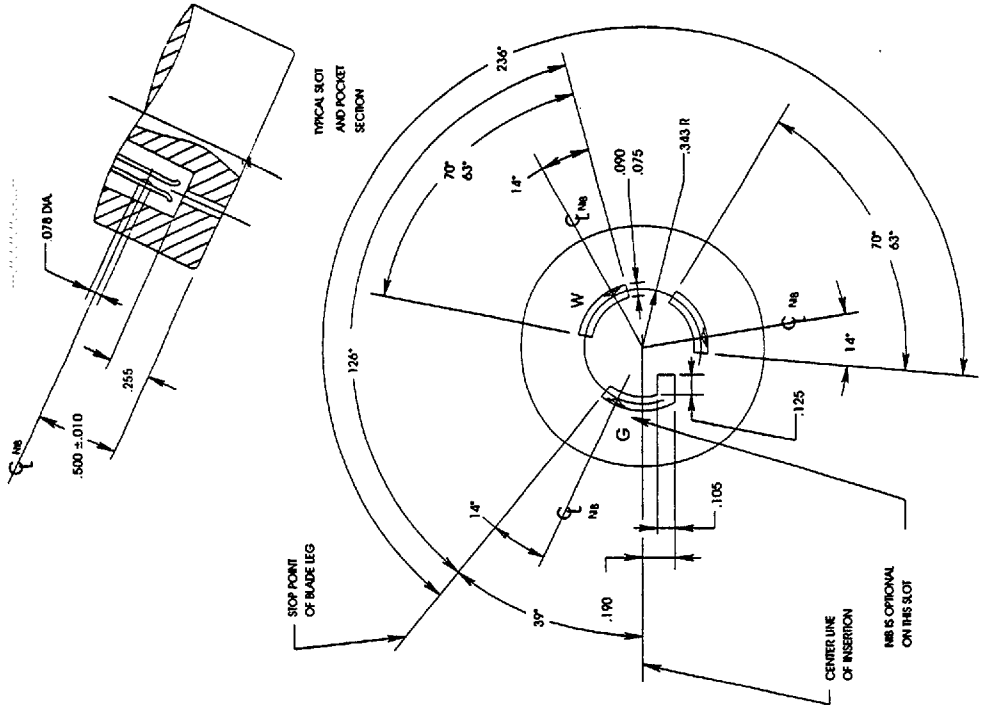

FIGURE 15-15
LOCKING TYPE PLUG AND RECEPTACLE
125 volts, 15 amperes, 2 pole, 3 wire, Grounding type

Copyright National Electrical Manufacturers Association
Provided by IHS under license with NEMA
No reproduction or networking permitted without license from IHS

Not for Resale

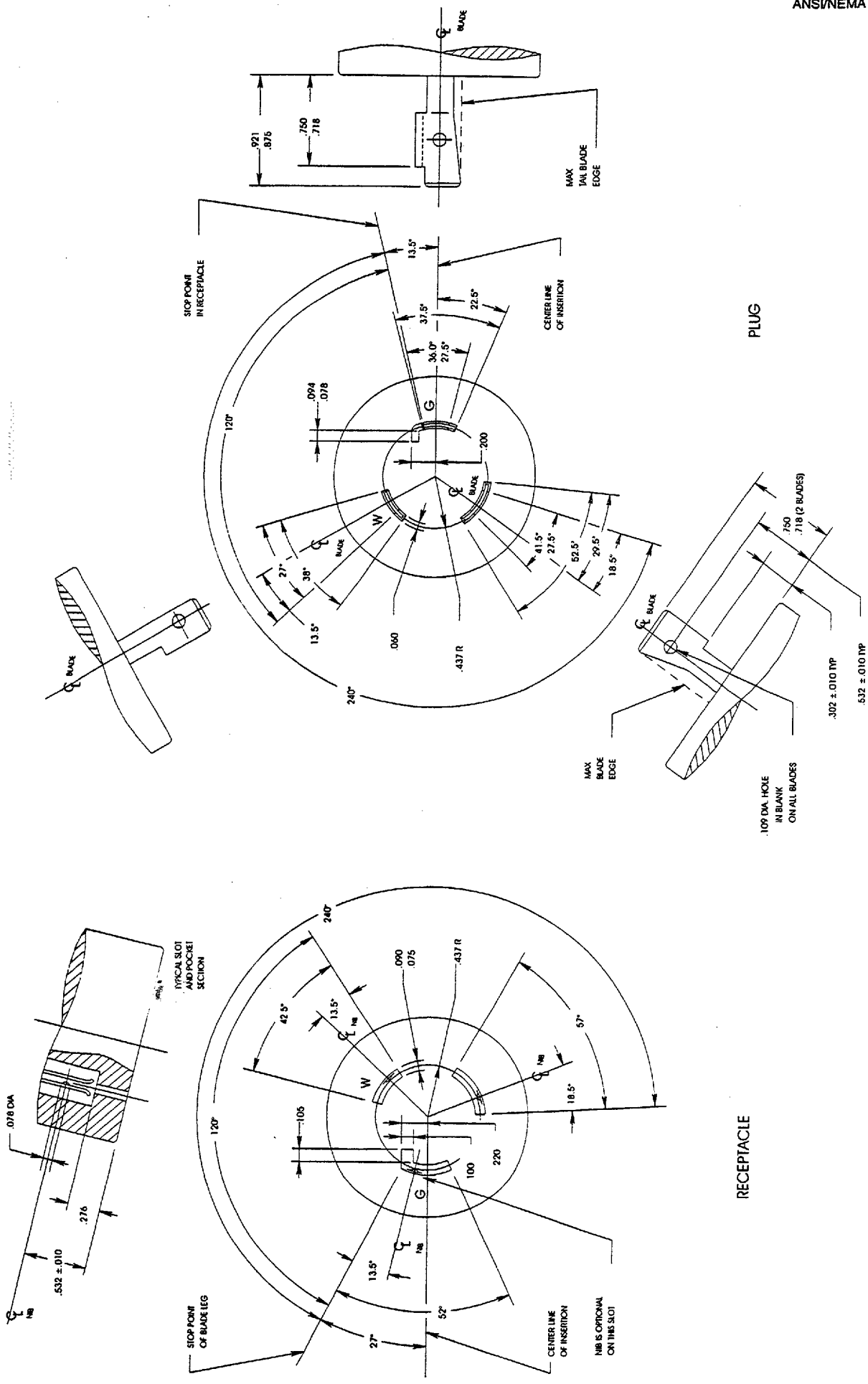

FIGURE L5-20
LOCKING TYPE PLUG AND RECEPTACLE
125 volts, 20 amperes, 2 pole, 3 wire, Grounding type

Copyright National Electrical Manufacturers Association
Provided by IHS under license with NEMA
No reproduction or networking permitted without license from IHS

Not for Resale

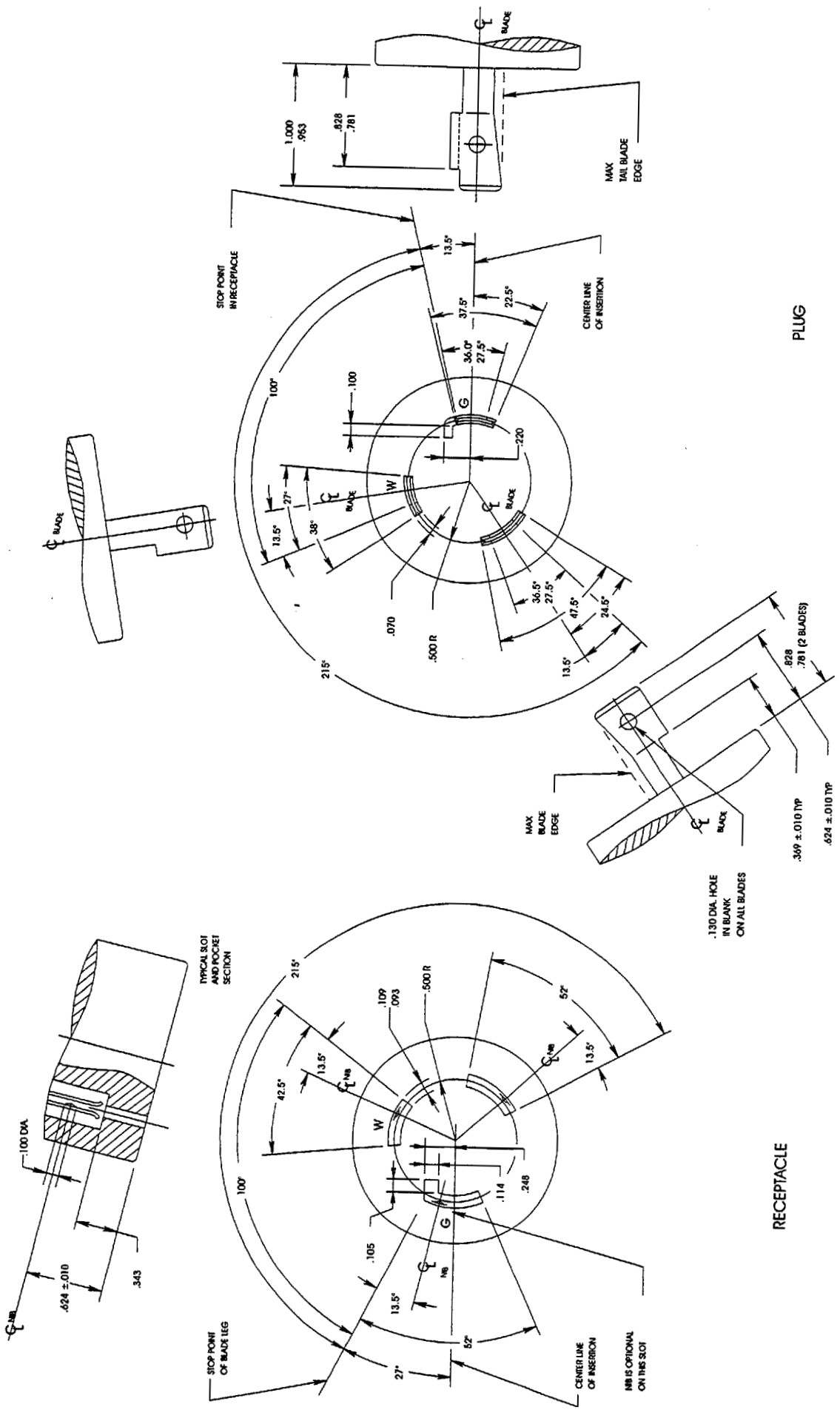

FIGURE L5-30
LOCKING TYPE PLUG AND RECEPTACLE
125 volts, 30 amperes, 2 pole, 3 wire, Grounding type

Copyright National Electrical Manufacturers Association
Provided by IHS under license with NEMA
No reproduction or networking permitted without license from IHS
Not for Resale

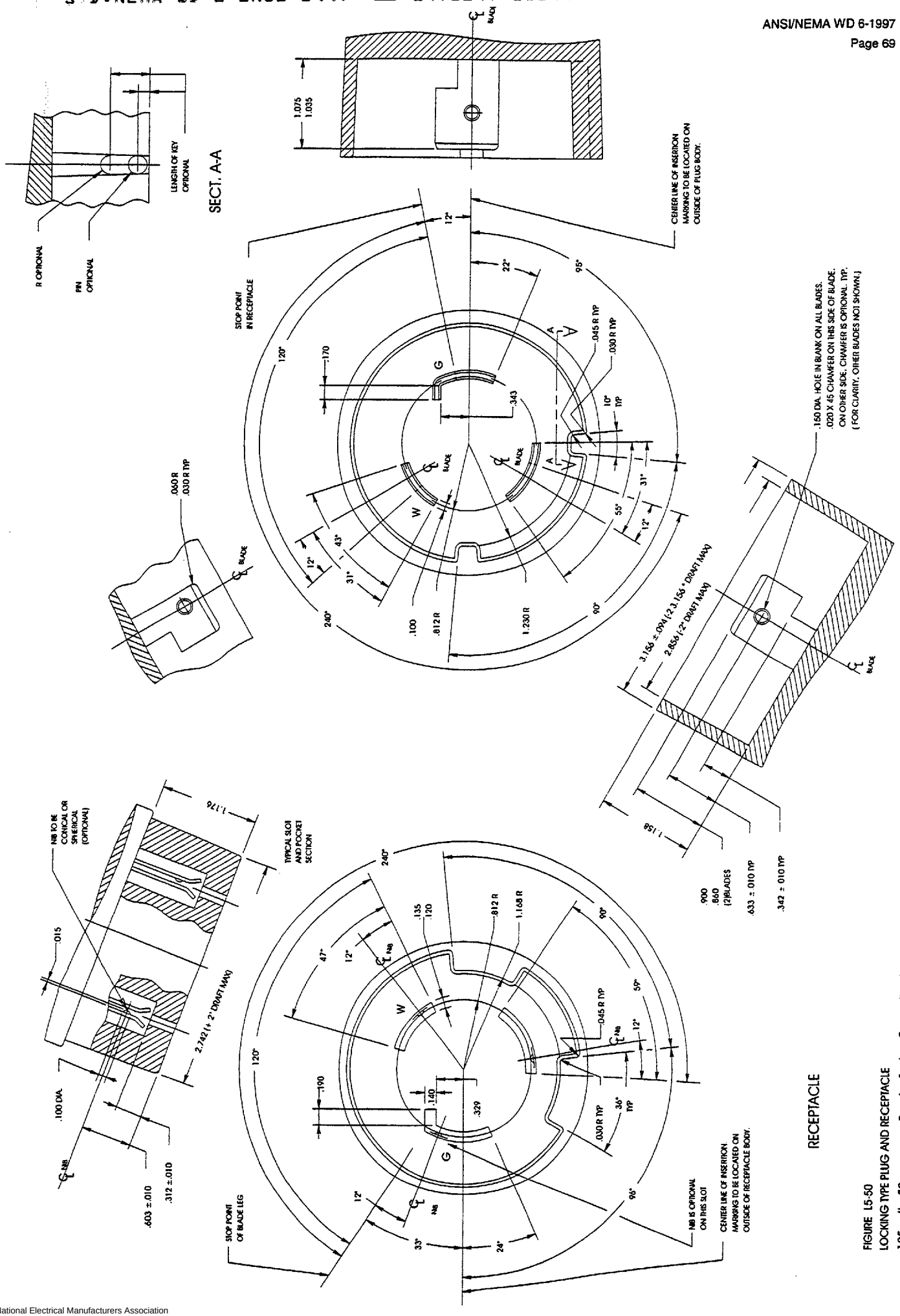

FIGURE L5-50
LOCKING TYPE PLUG AND RECEPTACLE
125 volts, 50 amperes, 2 pole, 3 wire, Grounding type

Copyright National Electrical Manufacturers Association
Provided by IHS under license with NEMA
No reproduction or networking permitted without license from IHS

Not for Resale

Copyright National Electrical Manufacturers Association
Provided by IHS under license with NEMA
No reproduction or networking permitted without license from IHS
Not for Resale

FIGURE L5-60
LOCKING TYPE PLUG AND RECEPTACLE
125 volts, 60 amperes, 2 pole, 3 wire, Grounding type

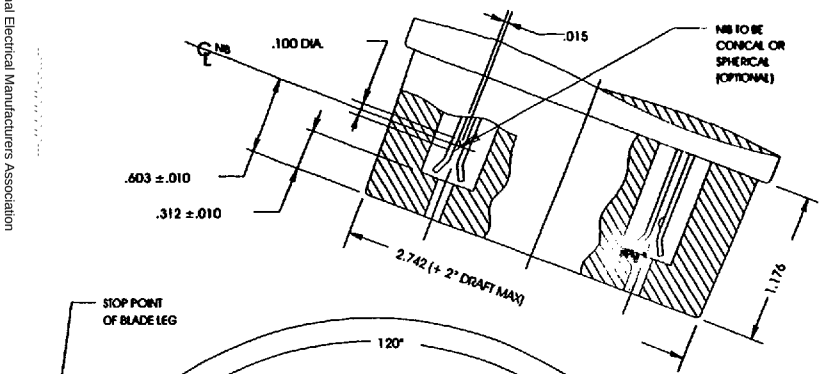

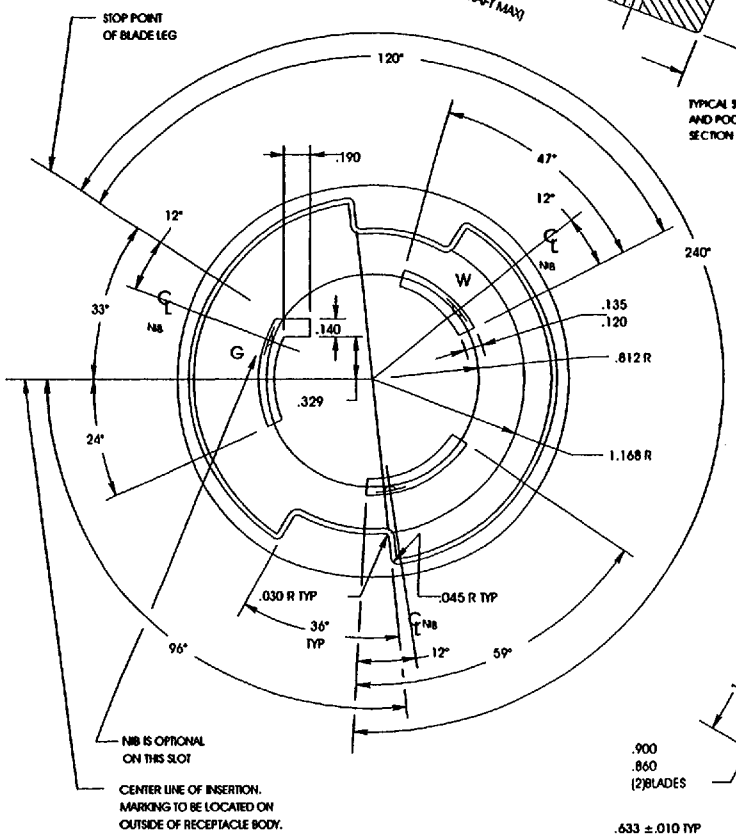

RECEPTACLE

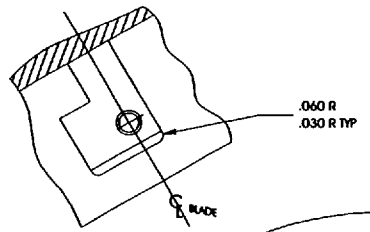

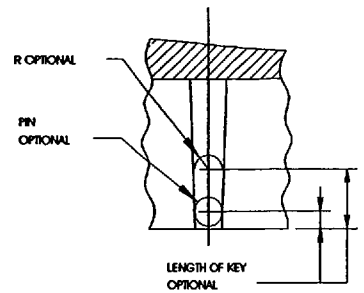

SECT. A-A

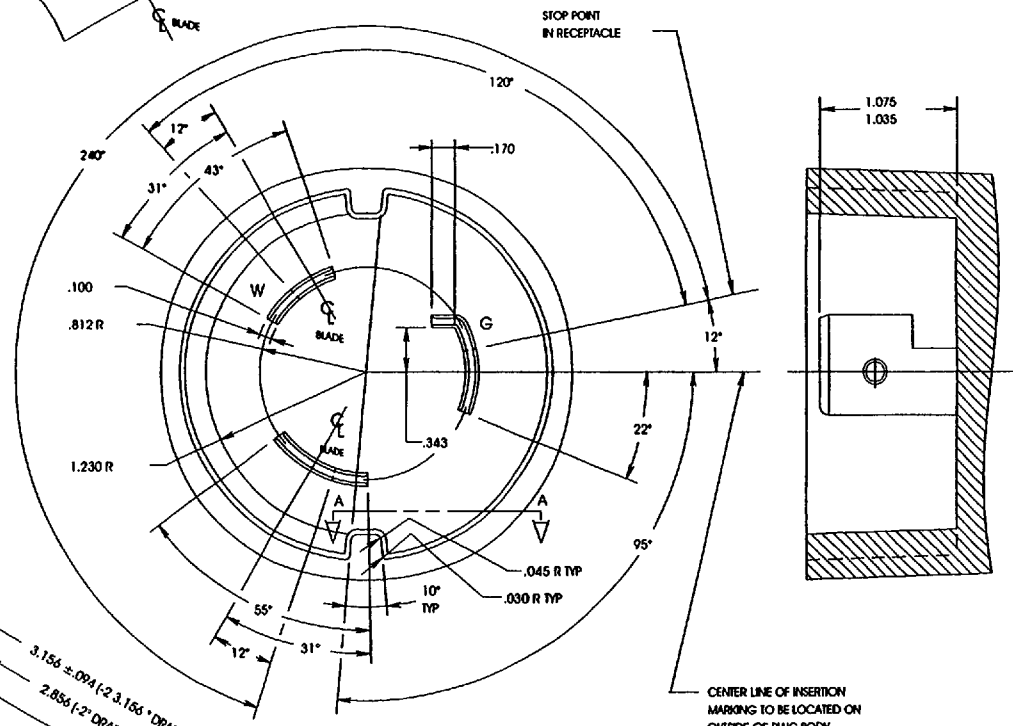

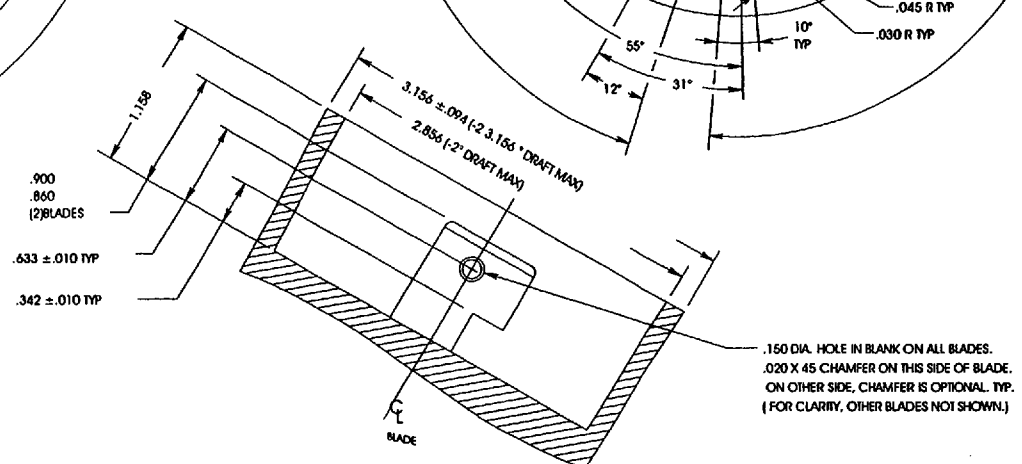

PLUG

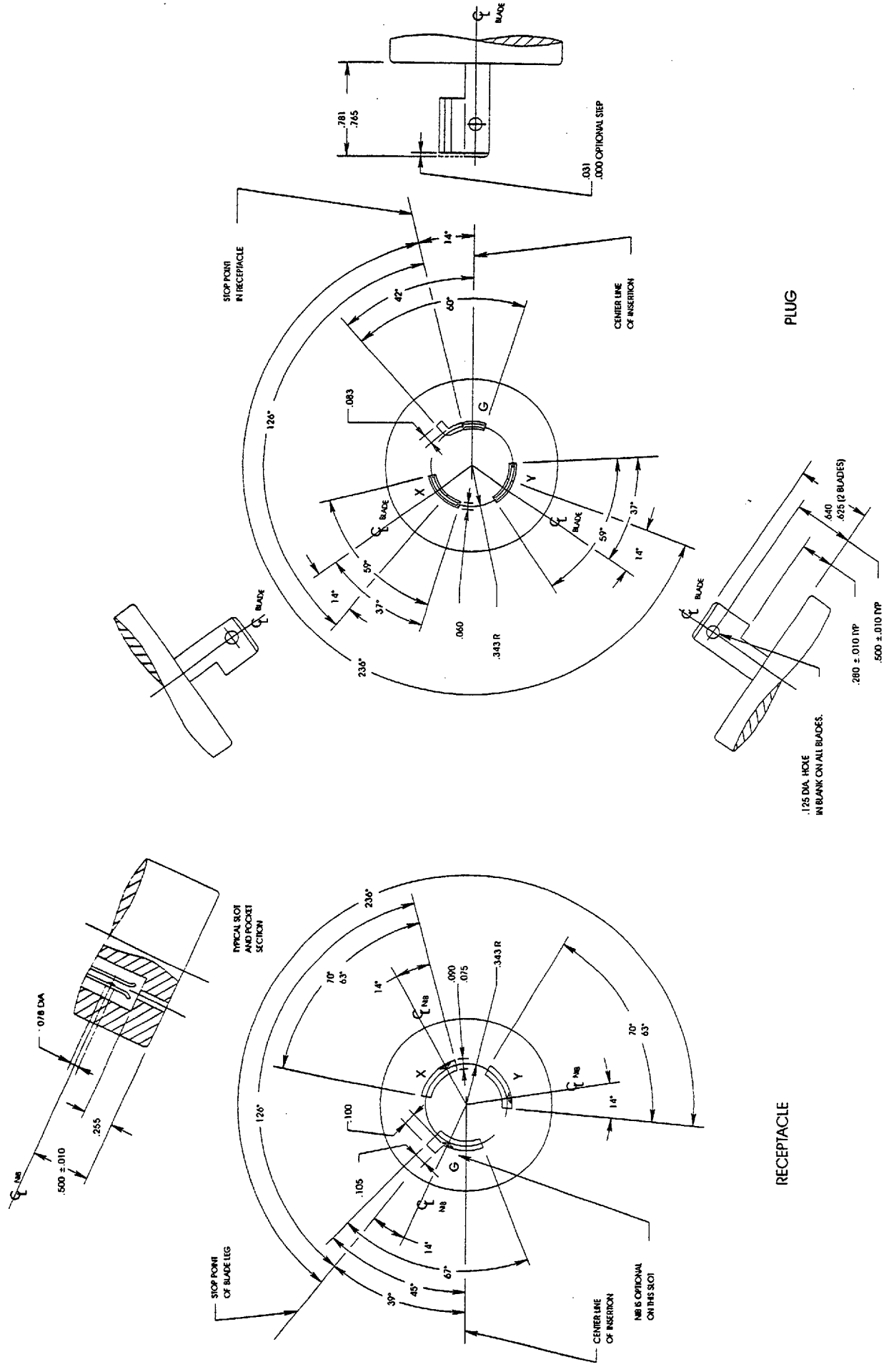

FIGURE L6-15
LOCKING TYPE PLUG AND RECEPTACLE
250 volts, 15 amperes, 2 pole, 3 wire, Grounding type

Copyright National Electrical Manufacturers Association
Provided by IHS under license with NEMA
No reproduction or networking permitted without license from IHS

Not for Resale

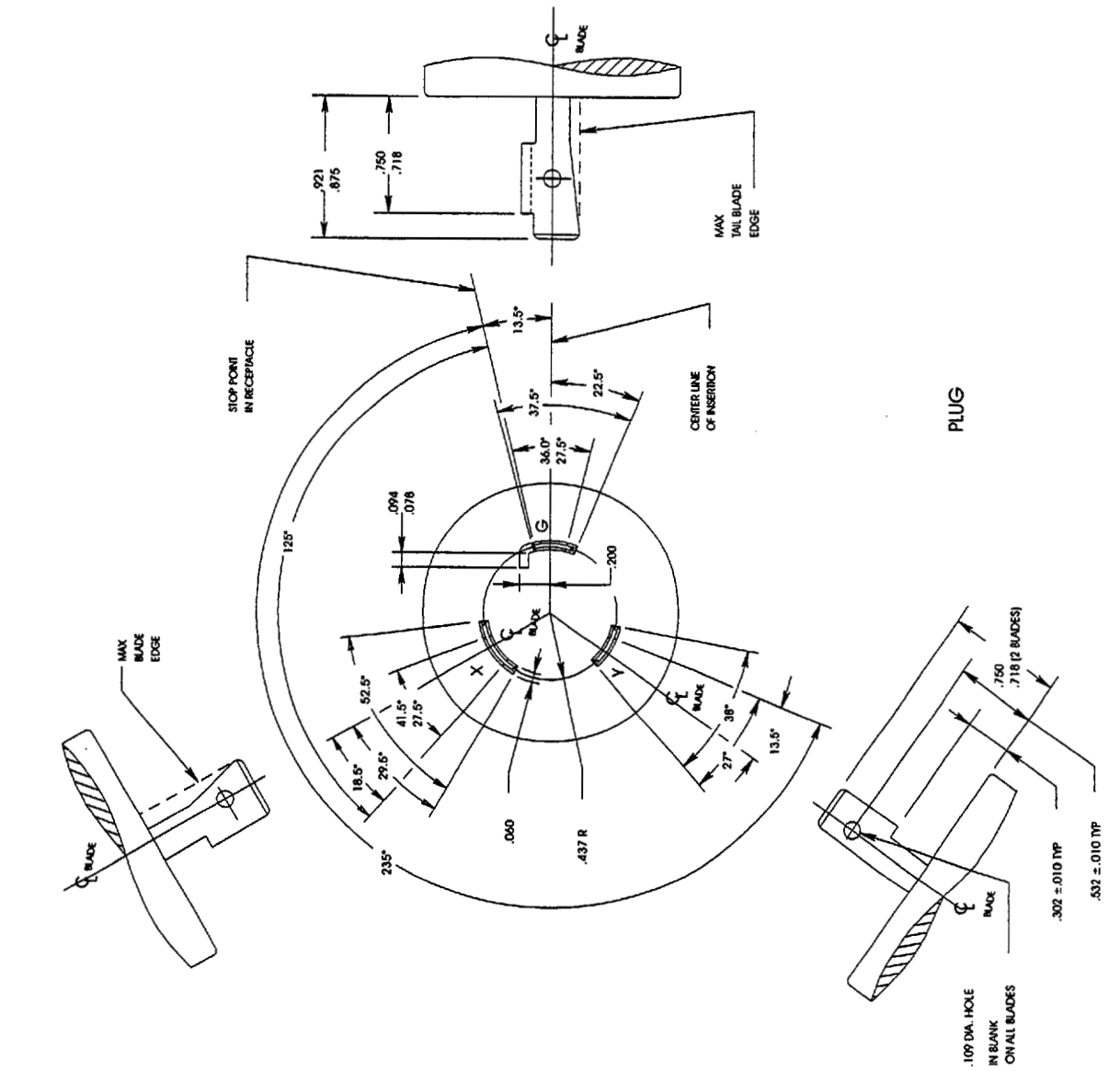

FIGURE L6-20
LOCKING TYPE PLUG AND RECEPTACLE
250 volts, 20 amperes, 2 pole, 3 wire, Grounding type

Copyright National Electrical Manufacturers Association
Provided by IHS under license with NEMA
No reproduction or networking permitted without license from IHS
Not for Resale

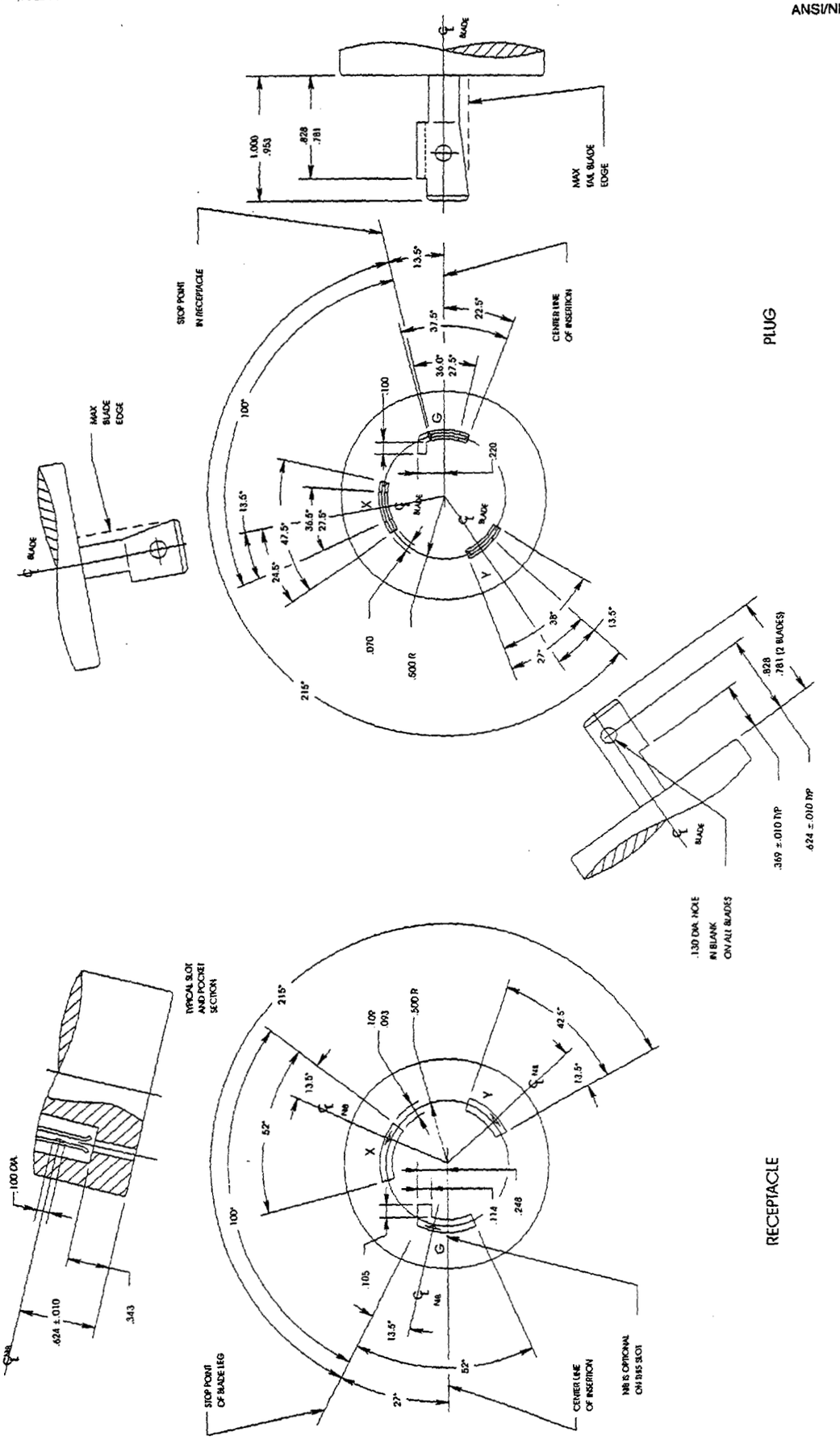

FIGURE L6-30
LOCKING TYPE PLUG AND RECEPTACLE
250 volts, 30 amperes, 2 pole, 3 wire, Grounding type

Copyright National Electrical Manufacturers Association
Provided by IHS under license with NEMA
No reproduction or networking permitted without license from IHS

Not for Resale

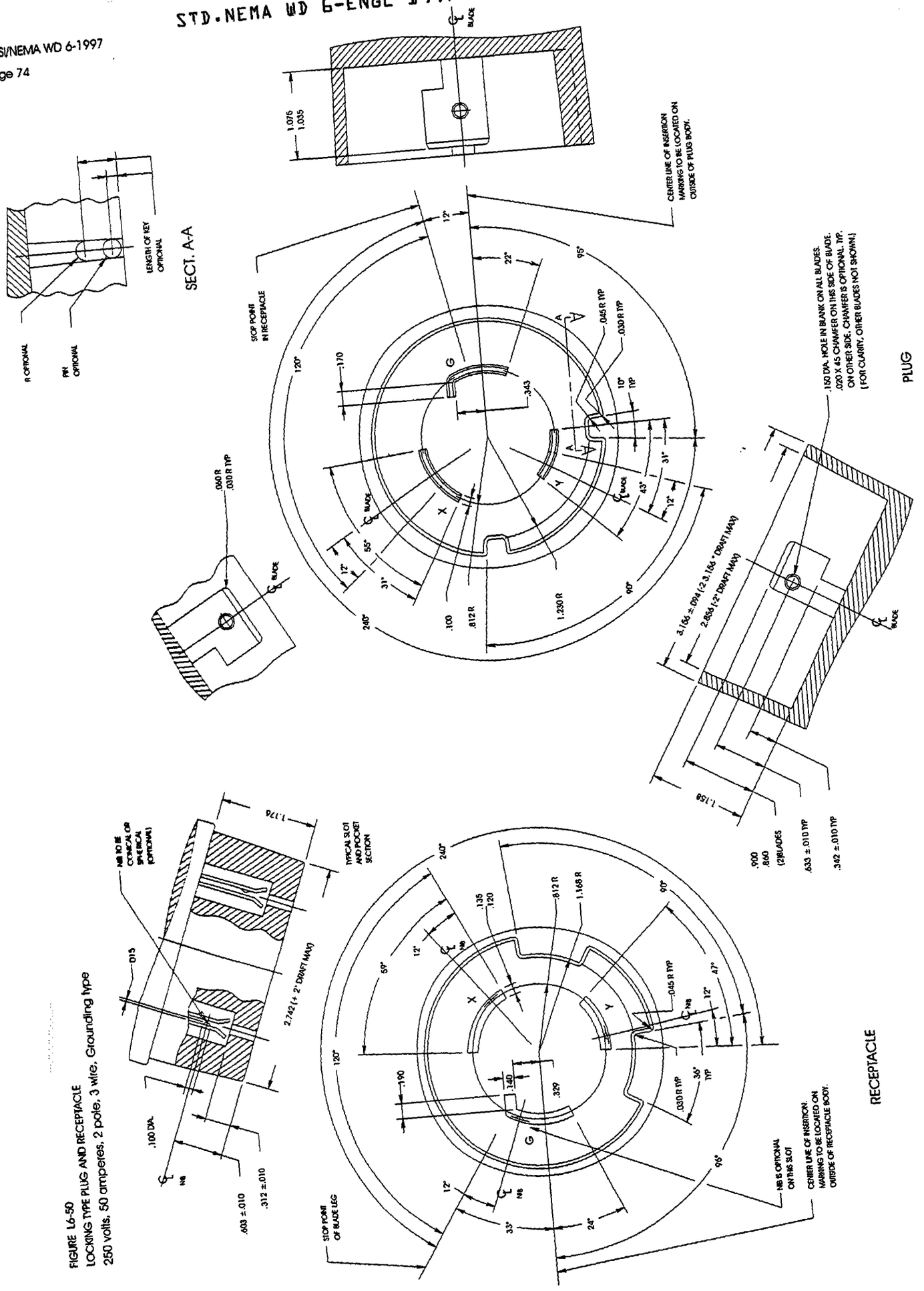

FIGURE L6-50
LOCKING TYPE PLUG AND RECEPTACLE
250 volts, 50 amperes, 2 pole, 3 wire, Grounding type

Copyright National Electrical Manufacturers Association
Provided by IHS under license with NEMA
No reproduction or networking permitted without license from IHS

Not for Resale

Copyright National Electrical Manufacturers Association
Provided by IHS under license with NEMA
No reproduction or networking permitted without license from IHS
Not for Resale

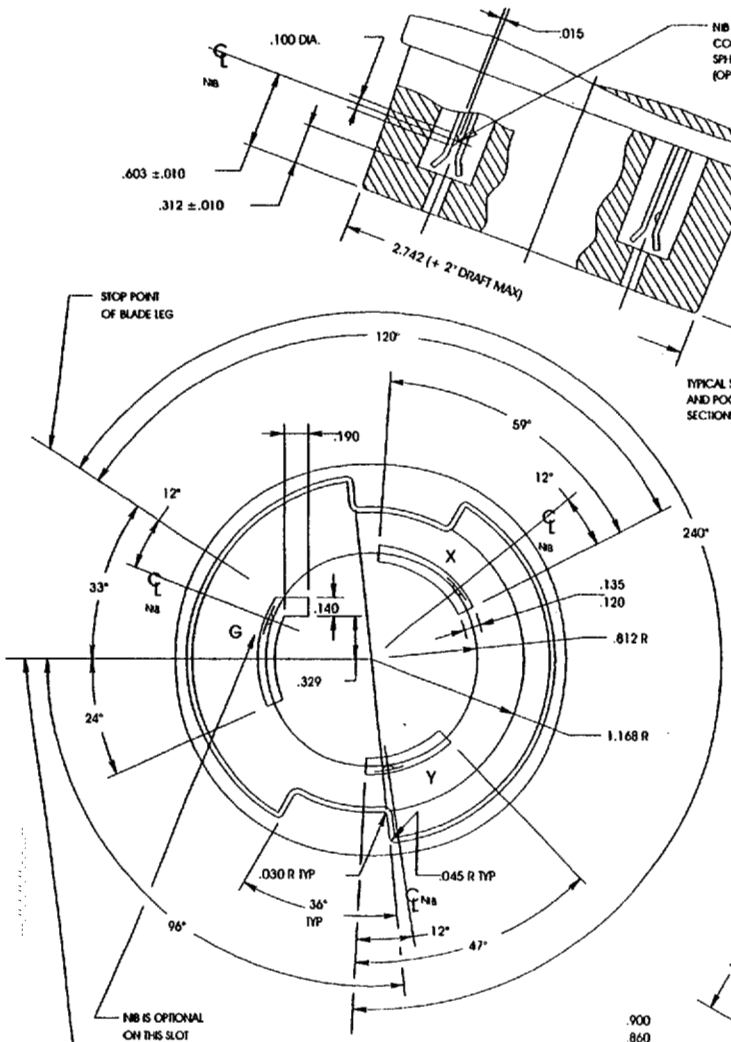

RECEPTACLE

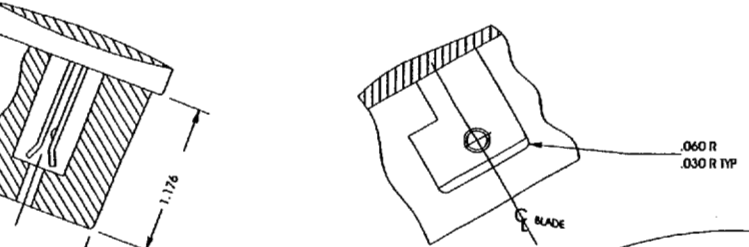

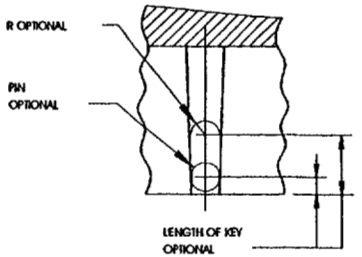

SECT. A-A

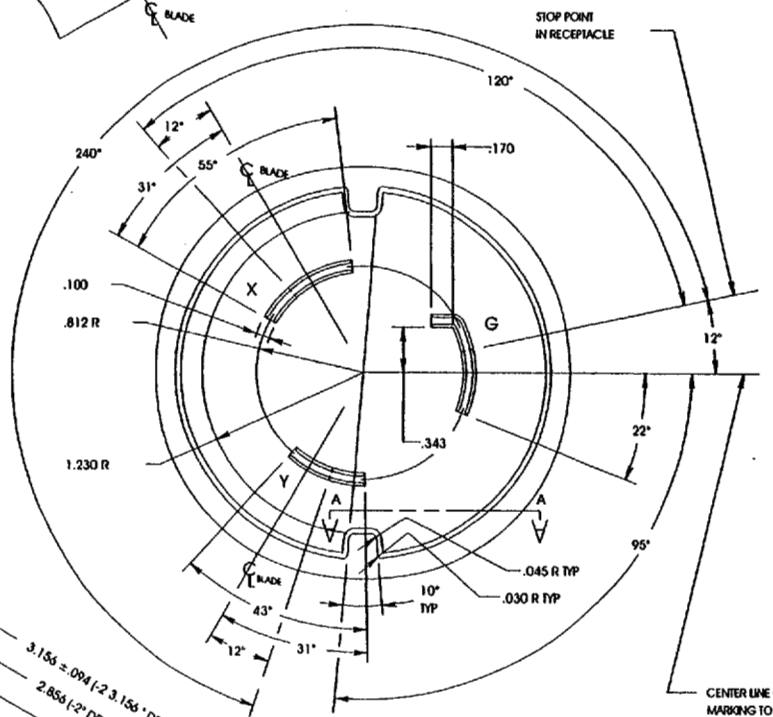

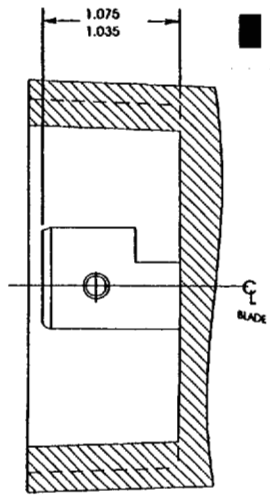

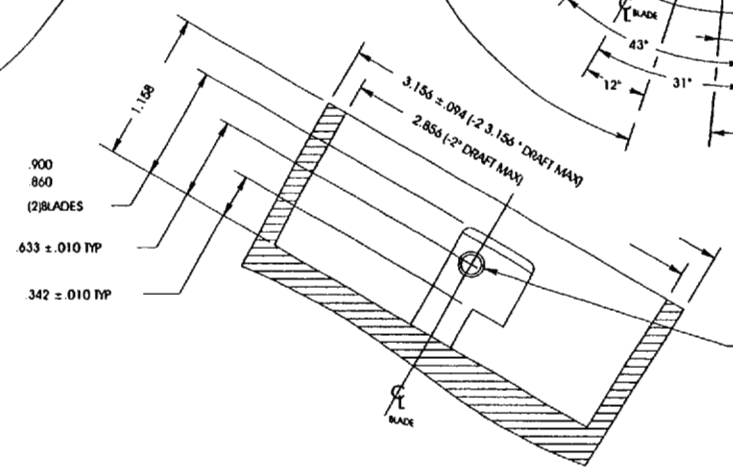

PLUG

FIGURE L6-60
LOCKING TYPE PLUG AND RECEPTACLE
250 volts, 60 amperes, 2 pole, 3 wire, Grounding type

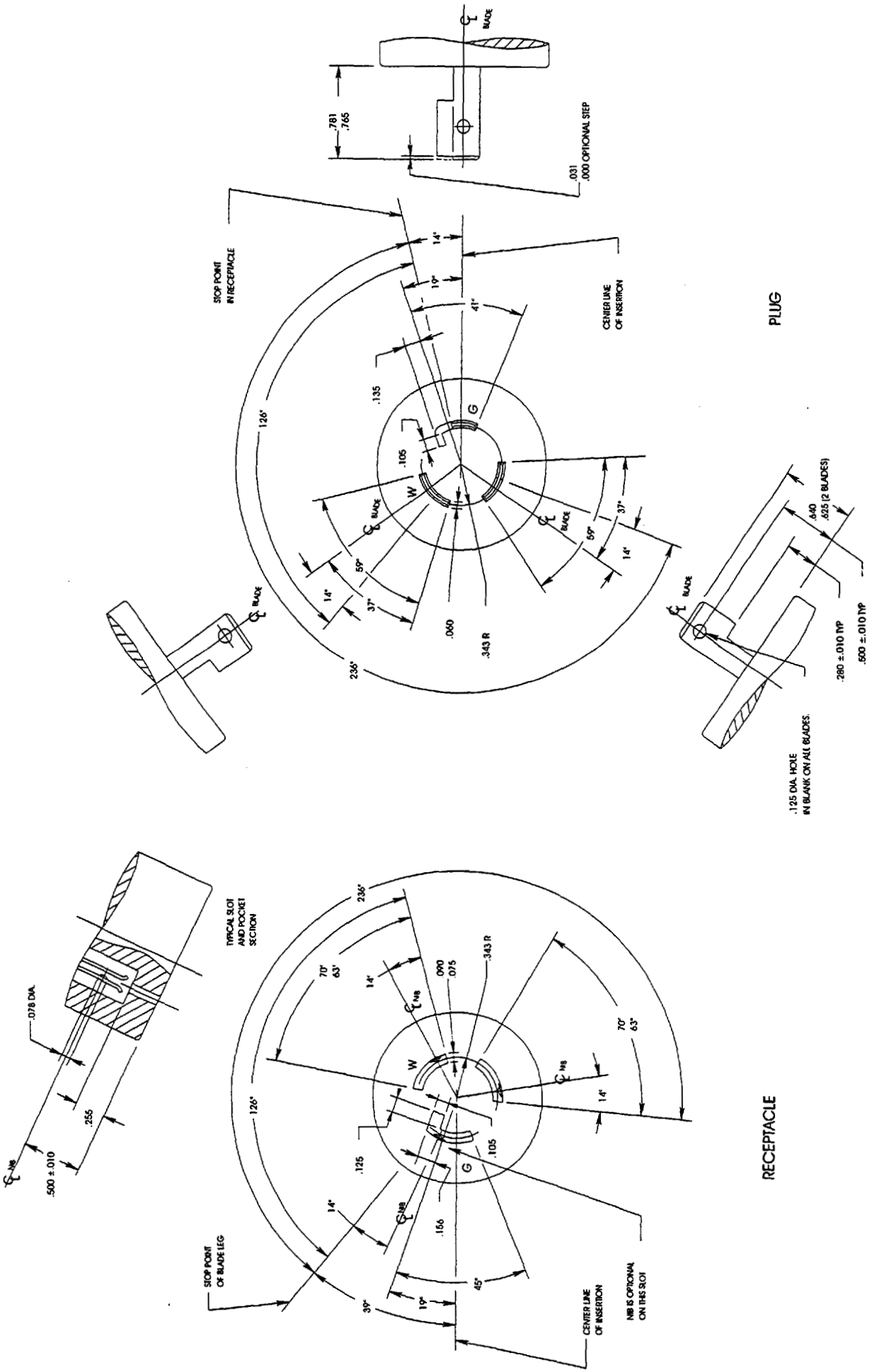

FIGURE L7-15
LOCKING TYPE PLUG AND RECEPTACLE
277 volts AC, 15 amperes, 2 pole, 3 wire, Grounding type

Copyright National Electrical Manufacturers Association
Provided by IHS under license with NEMA
No reproduction or networking permitted without license from IHS
Not for Resale

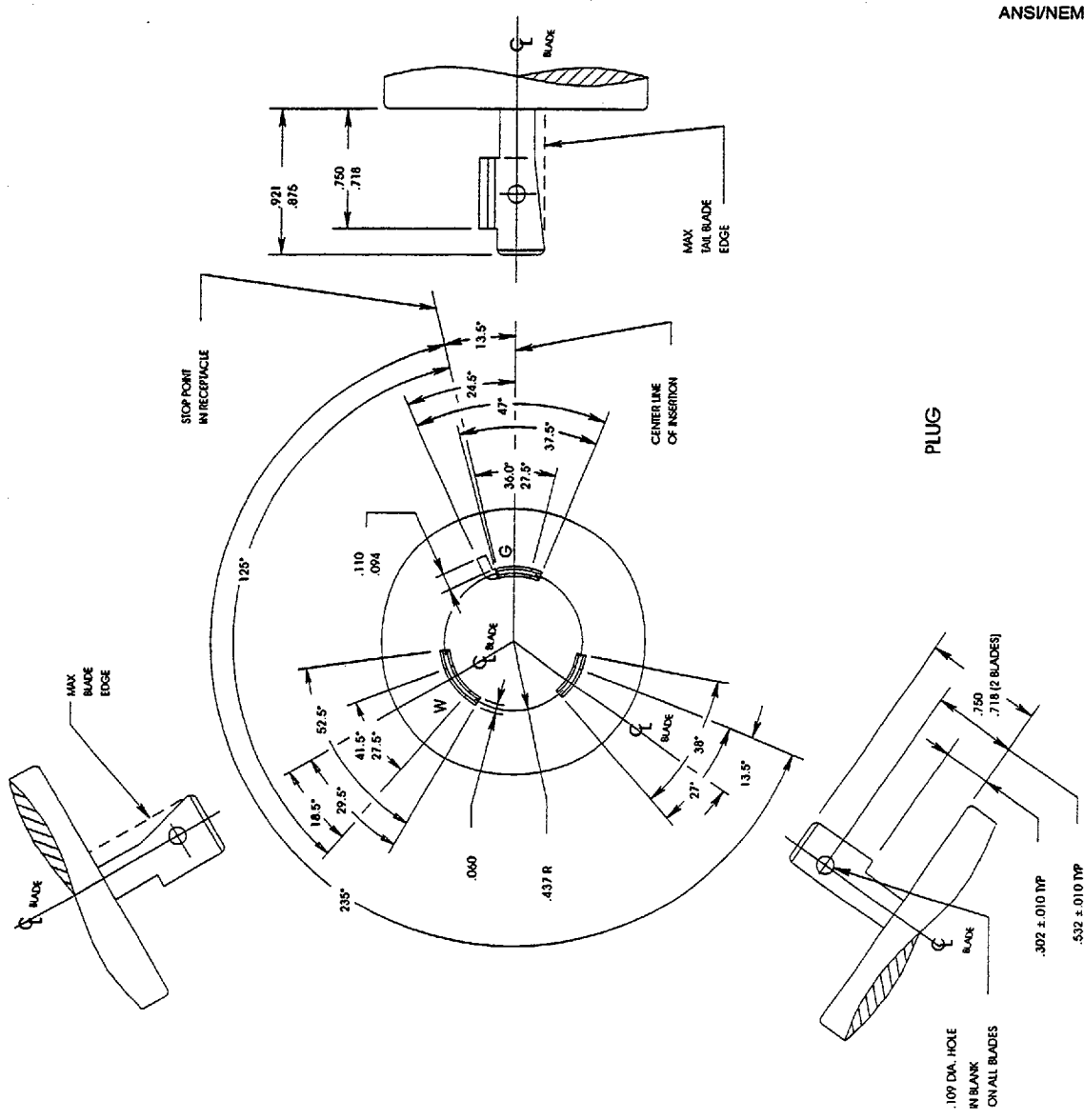

FIGURE L7-20
LOCKING TYPE PLUG AND RECEPTACLE
277 volts AC, 20 amperes, 2 pole, 3 wire, Grounding type

Copyright National Electrical Manufacturers Association
Provided by IHS under license with NEMA
No reproduction or networking permitted without license from IHS

Not for Resale

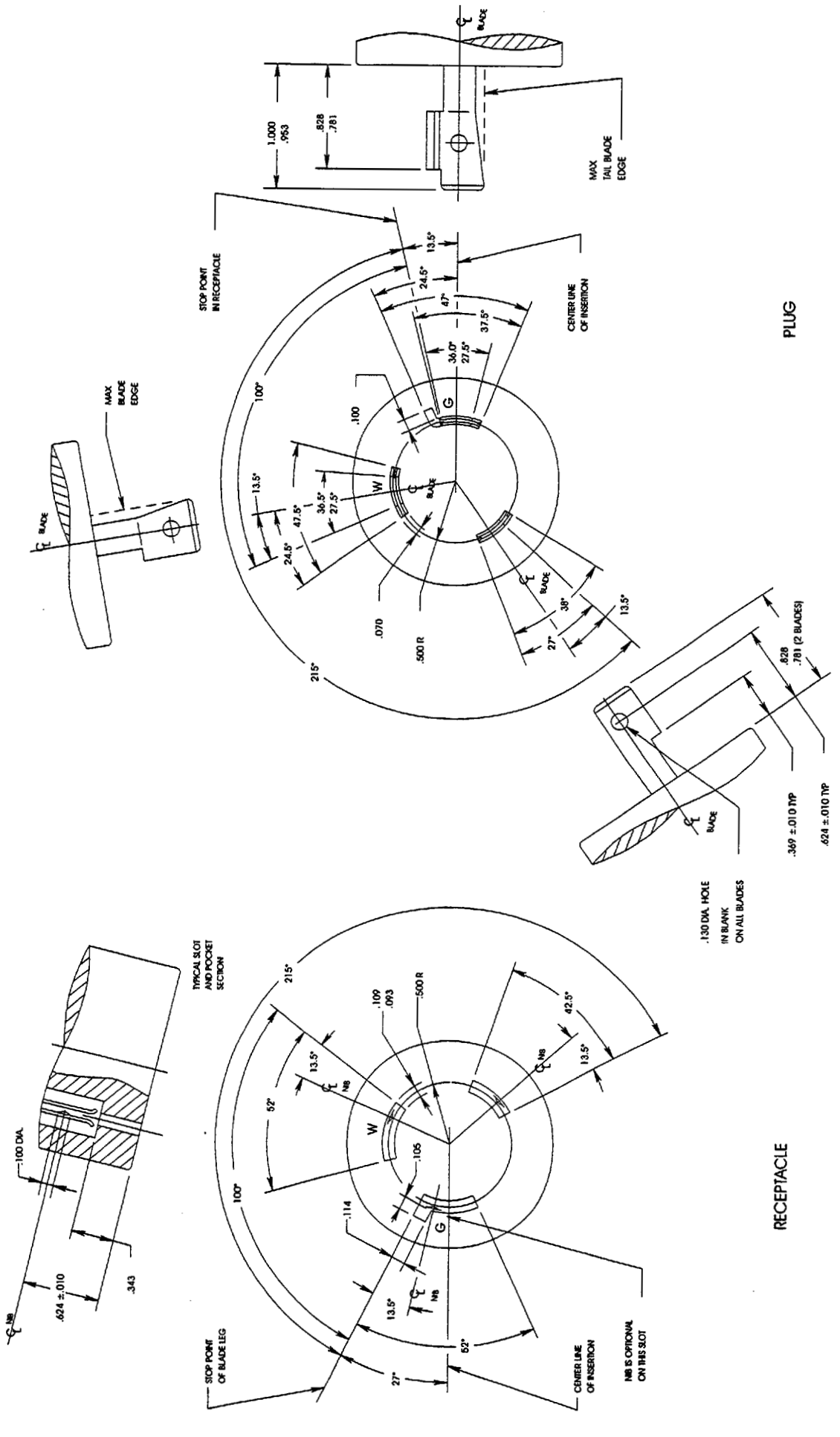

FIGURE L7-30
LOCKING TYPE PLUG AND RECEPTACLE
277 volts AC, 30 amperes, 2 pole, 3 wire, Grounding type

Copyright National Electrical Manufacturers Association
Provided by IHS under license with NEMA
No reproduction or networking permitted without license from IHS
Not for Resale

Copyright National Electrical Manufacturers Association
Provided by IHS under license with NEMA
No reproduction or networking permitted without license from IHS
Not for Resale

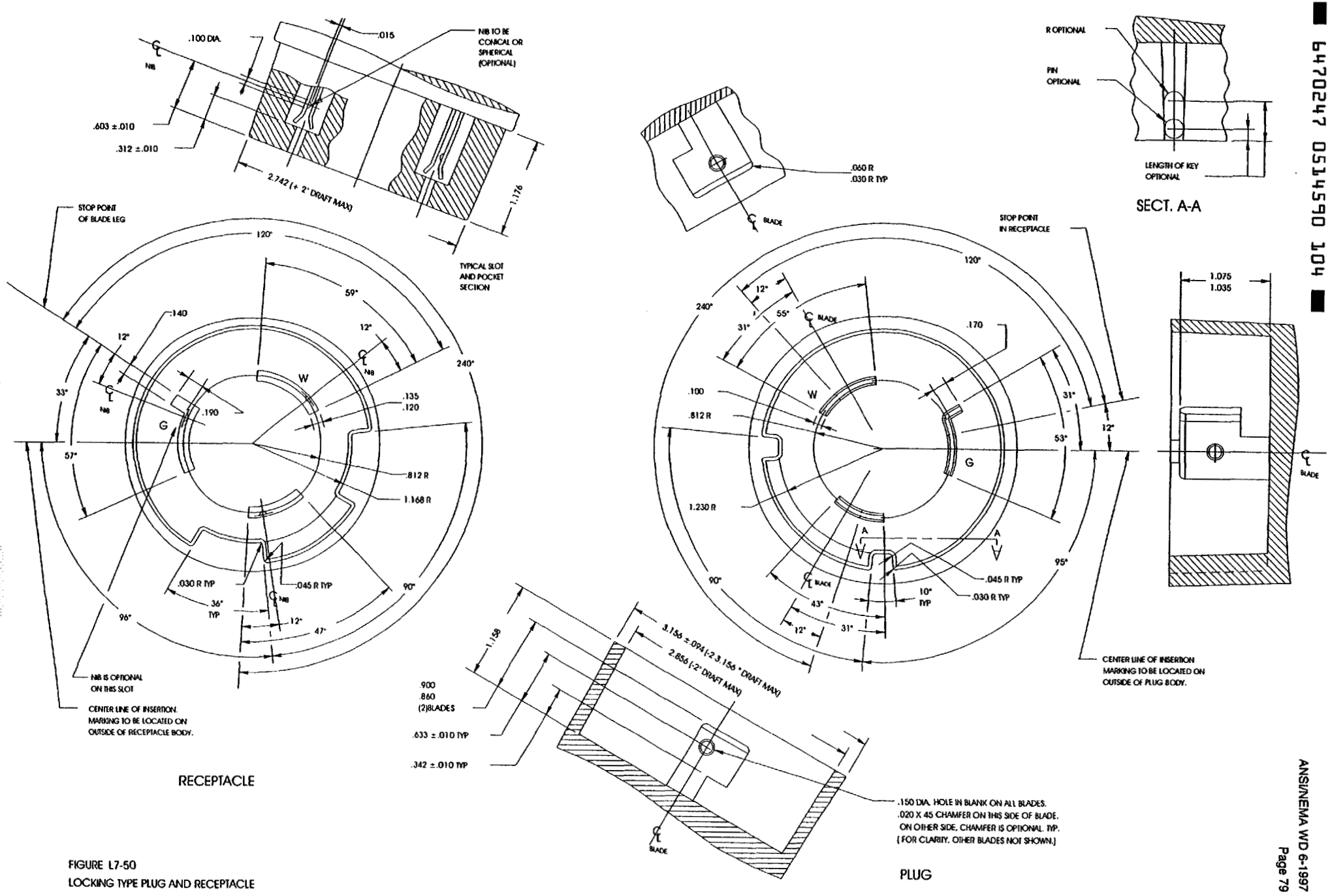

FIGURE L7-50
LOCKING TYPE PLUG AND RECEPTACLE
277 volts AC, 50 amperes, 2 pole, 3 wire, Grounding type

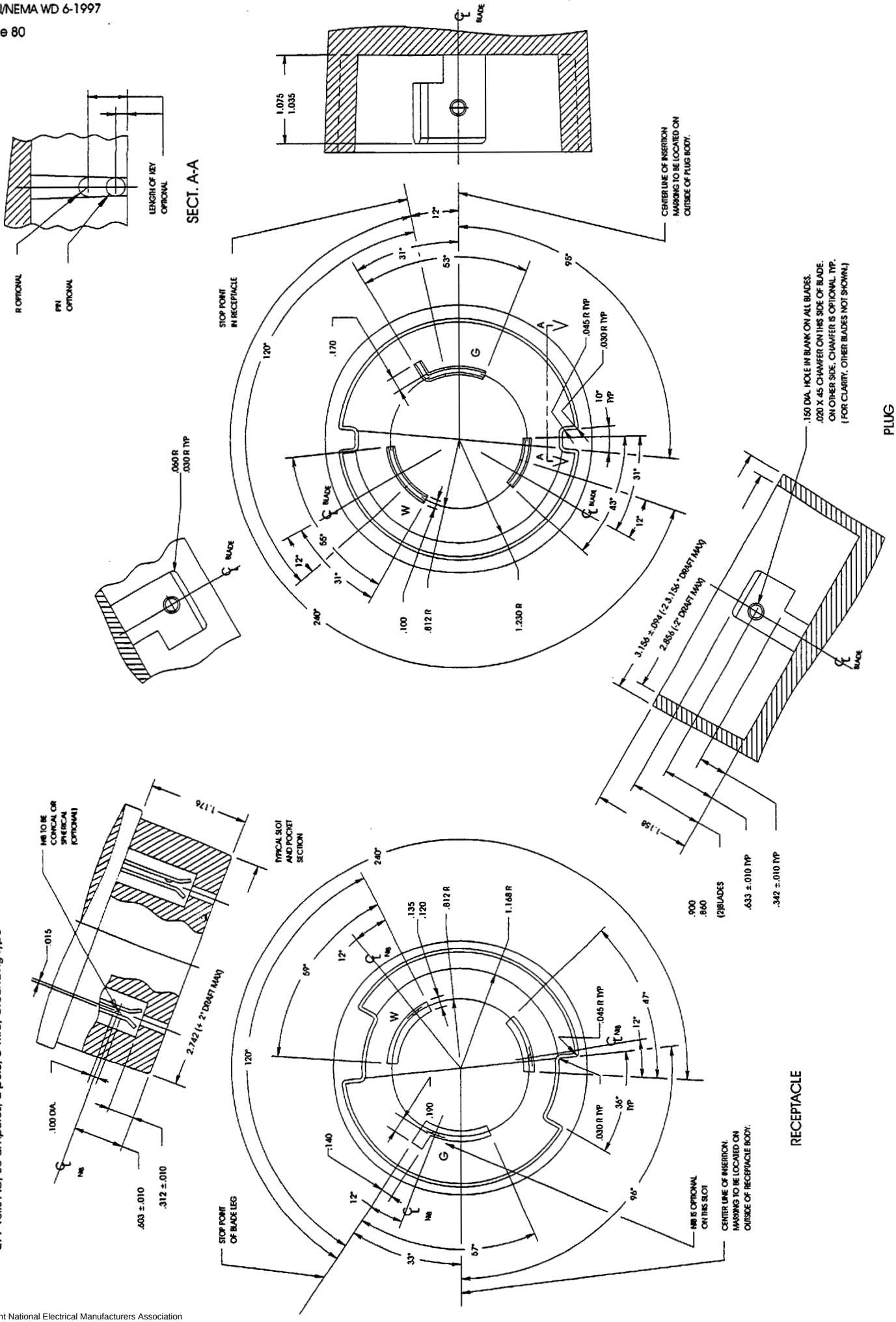

FIGURE L7-60
LOCKING TYPE PLUG AND RECEPTACLE
277 volts AC, 60 amperes, 2 pole, 3 wire, Grounding type

Copyright National Electrical Manufacturers Association
Provided by IHS under license with NEMA
No reproduction or networking permitted without license from IHS

Not for Resale

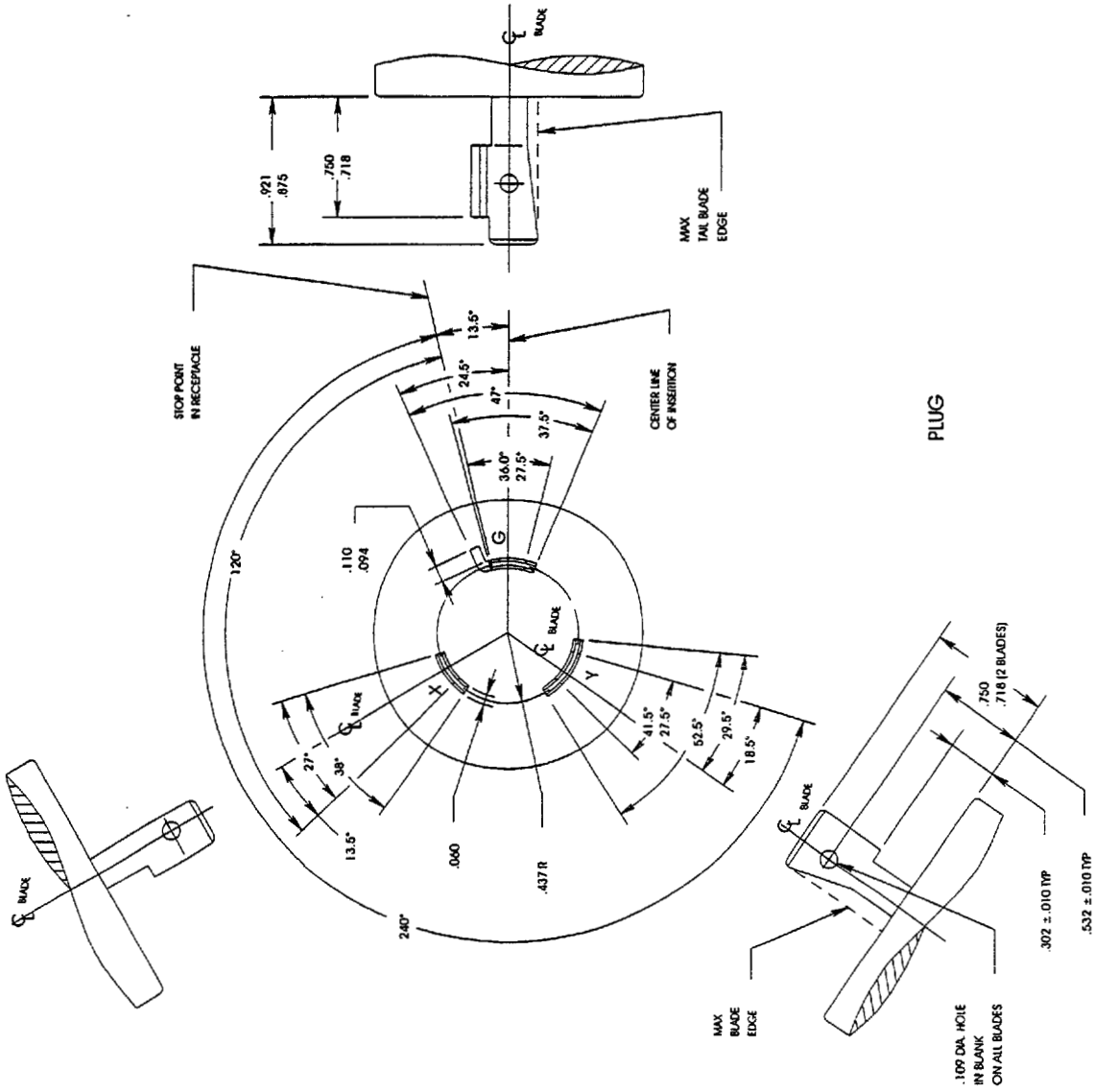

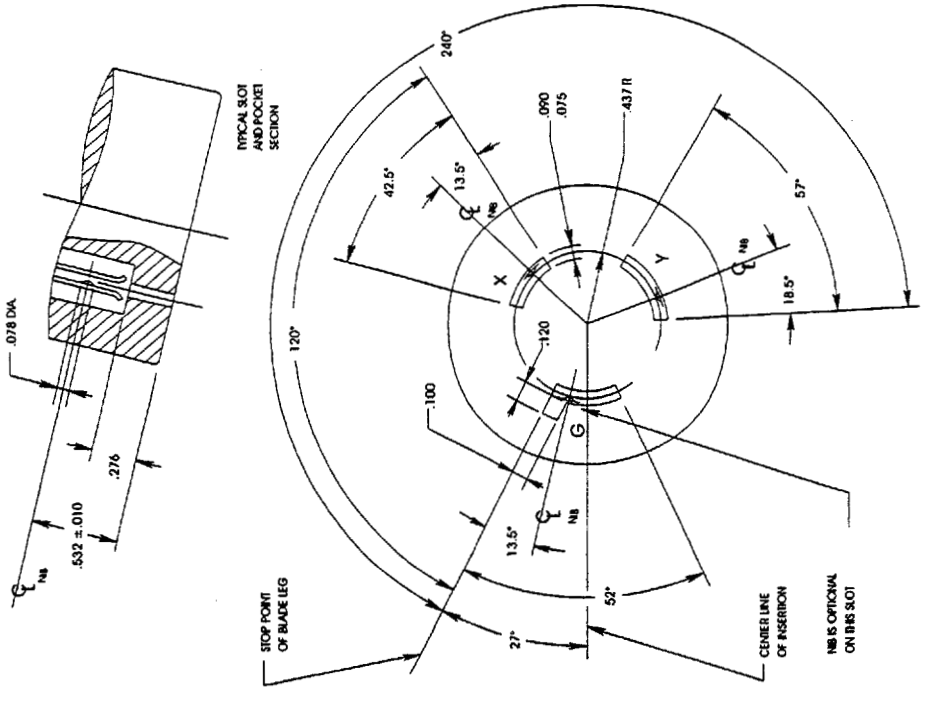

FIGURE L8-20
LOCKING TYPE PLUG AND RECEPTACLE
480 volts AC, 20 amperes, 2 pole, 3 wire, Grounding type

Copyright National Electrical Manufacturers Association
Provided by IHS under license with NEMA
No reproduction or networking permitted without license from IHS

Not for Resale

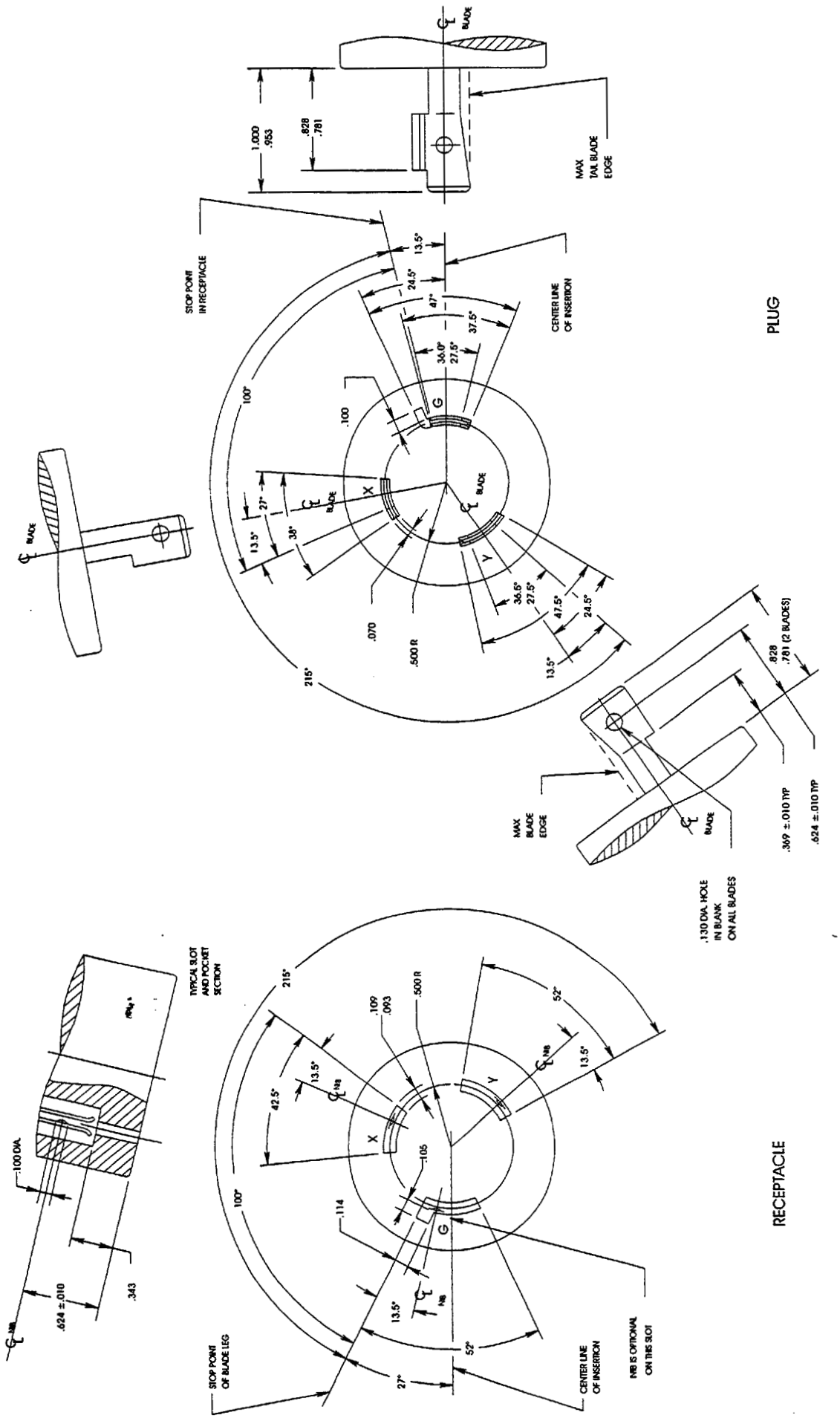

FIGURE L8-30
LOCKING TYPE PLUG AND RECEPTACLE
480 volts AC, 30 amperes, 2 pole, 3 wire, Grounding type

Copyright National Electrical Manufacturers Association
Provided by IHS under license with NEMA
No reproduction or networking permitted without license from IHS

Not for Resale

Copyright National Electrical Manufacturers Association
Provided by IHS under license with NEMA
No reproduction or networking permitted without license from IHS
Not for Resale

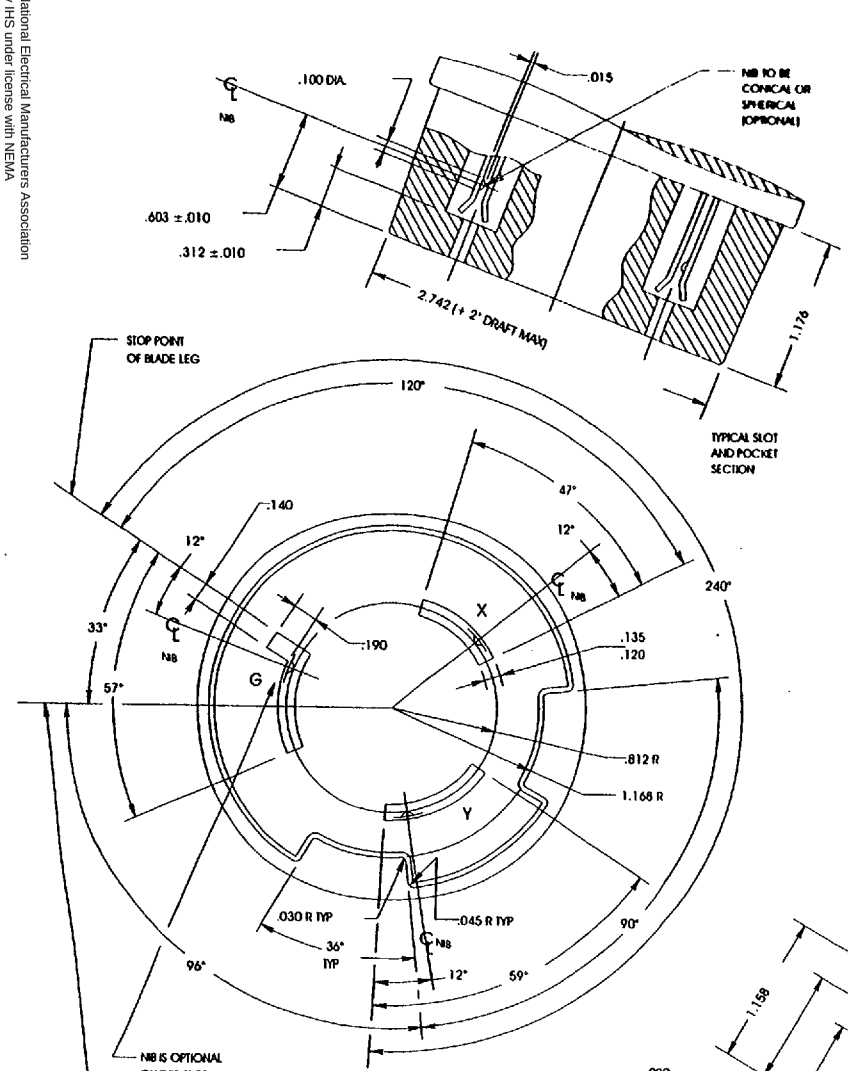

RECEPTACLE

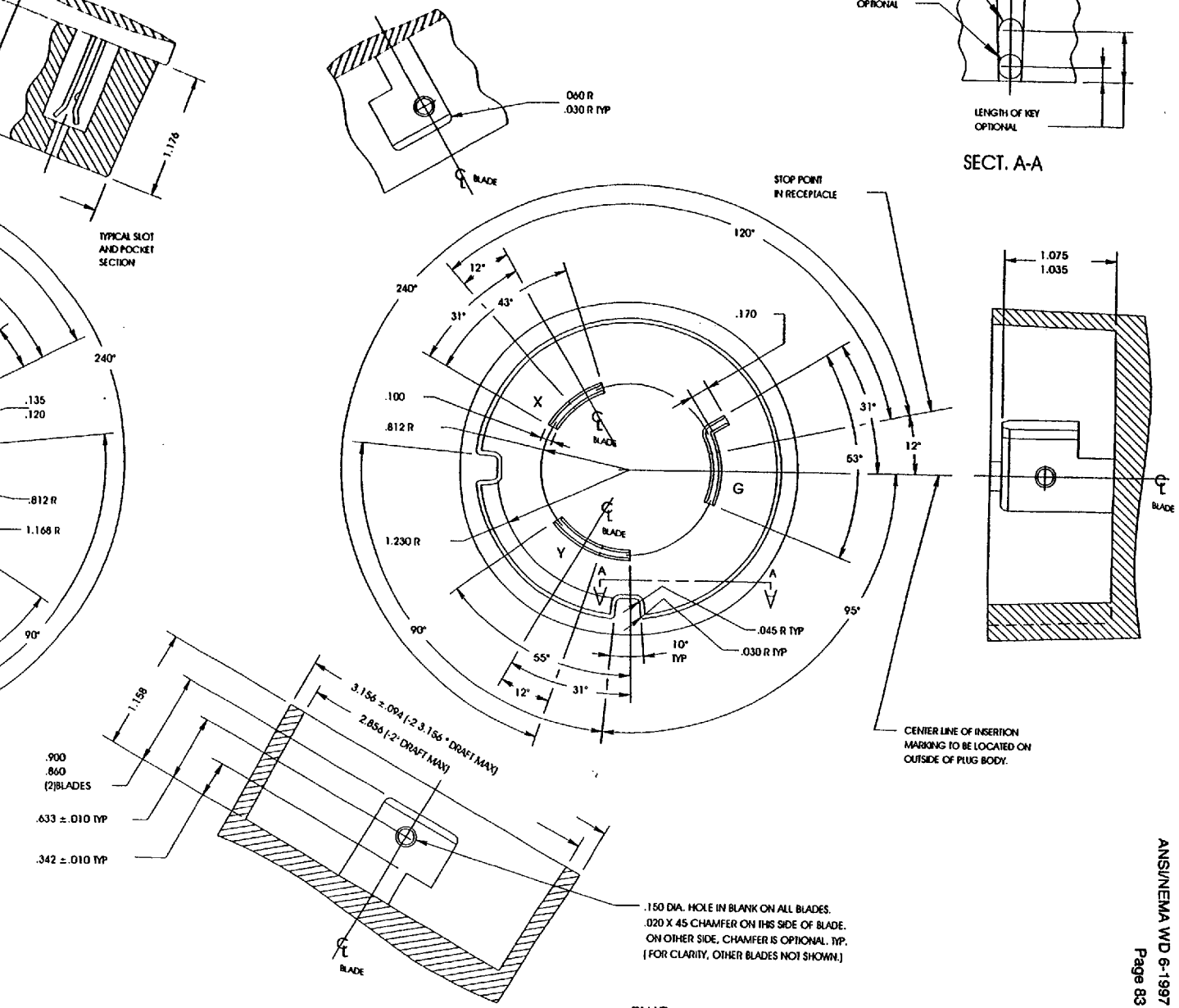

PLUG

FIGURE L8-50
LOCKING TYPE PLUG AND RECEPTACLE
480 volts AC, 50 amperes, 2 pole, 3 wire, Grounding type

LOCKING TYPE PLUG AND RECEPTACLE

480 volts AC, 60 amperes, 2 pole, 3 wire, Grounding type

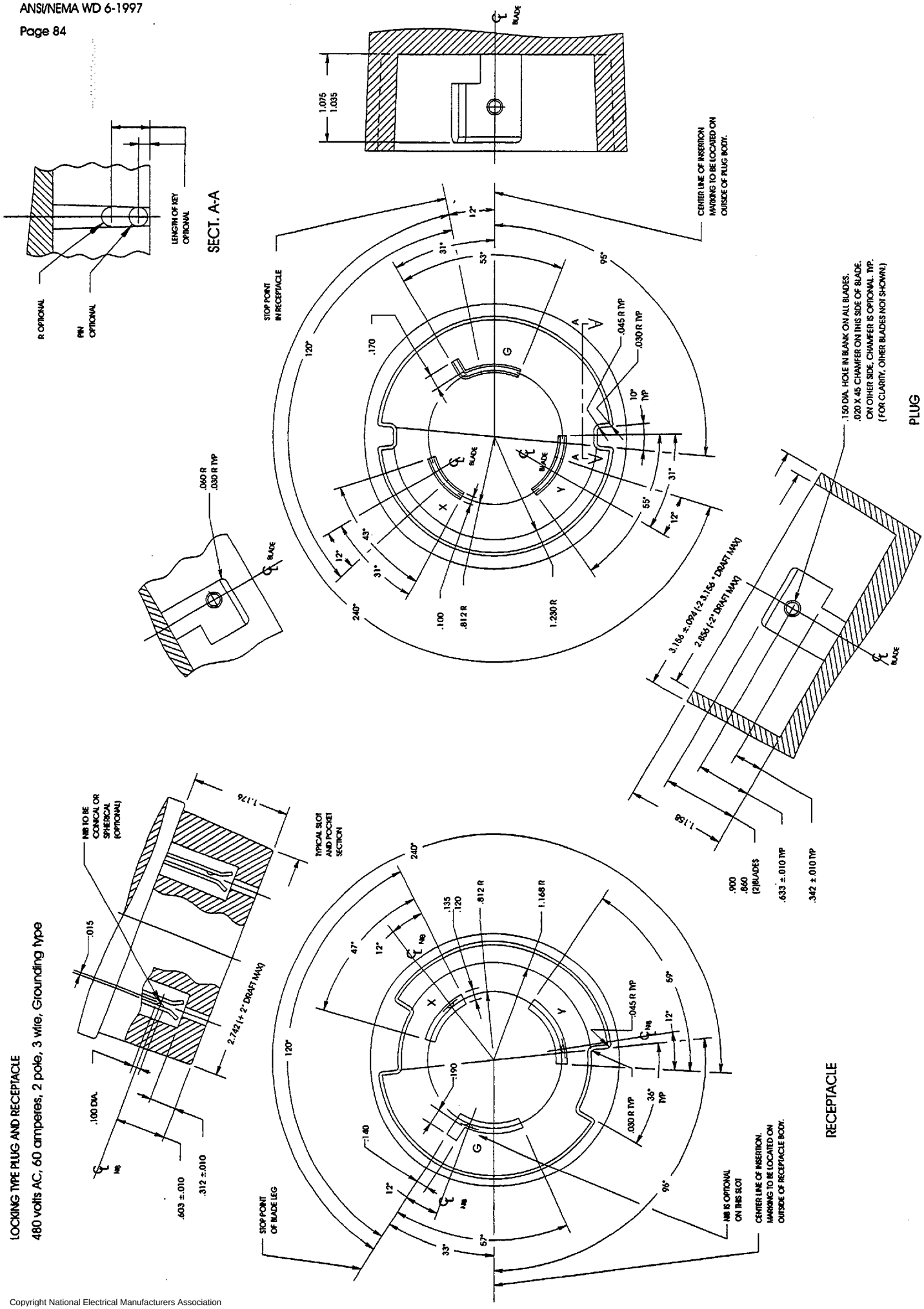

Copyright National Electrical Manufacturers Association
Provided by IHS under license with NEMA
No reproduction or networking permitted without license from IHS

Not for Resale

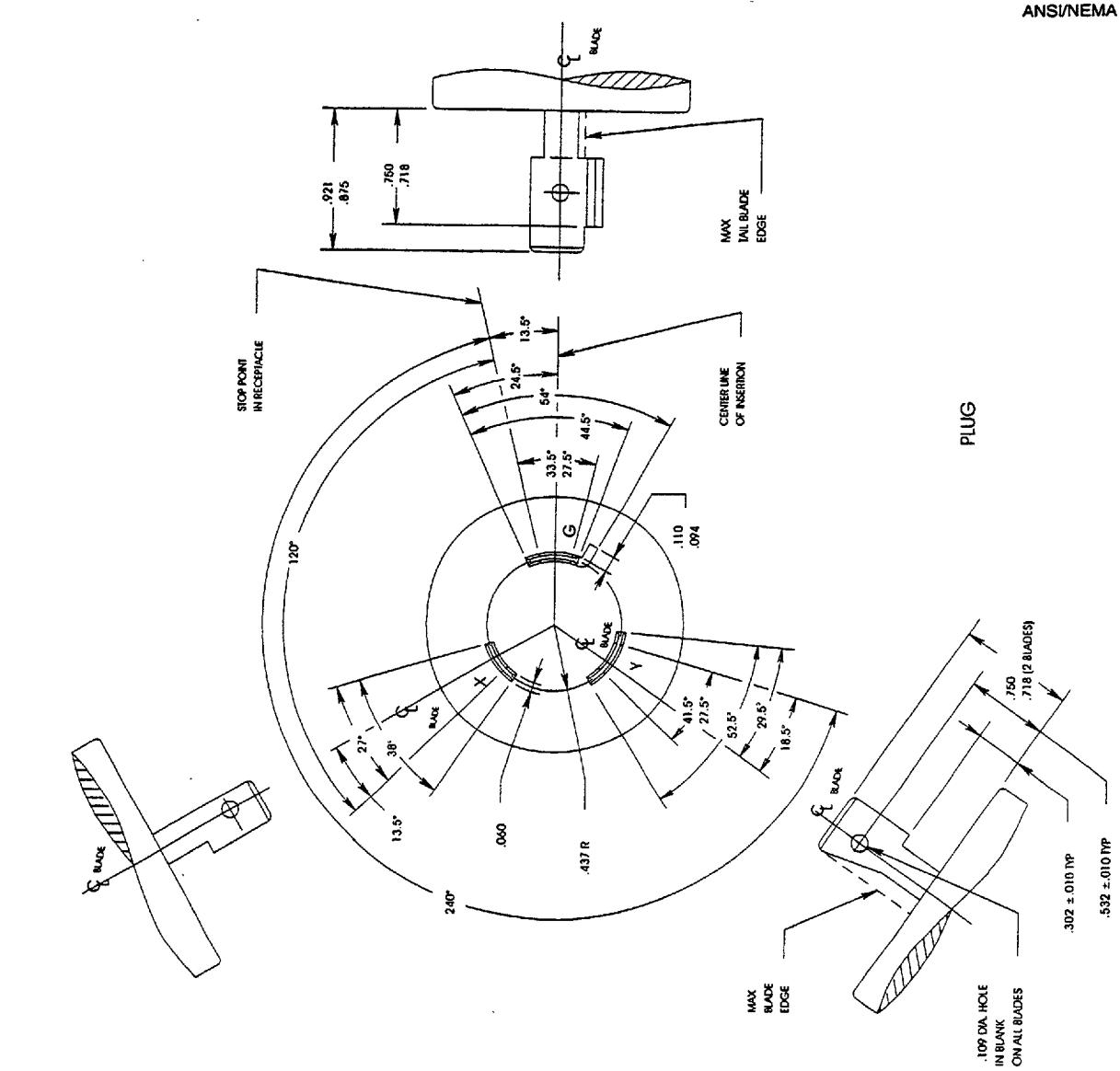

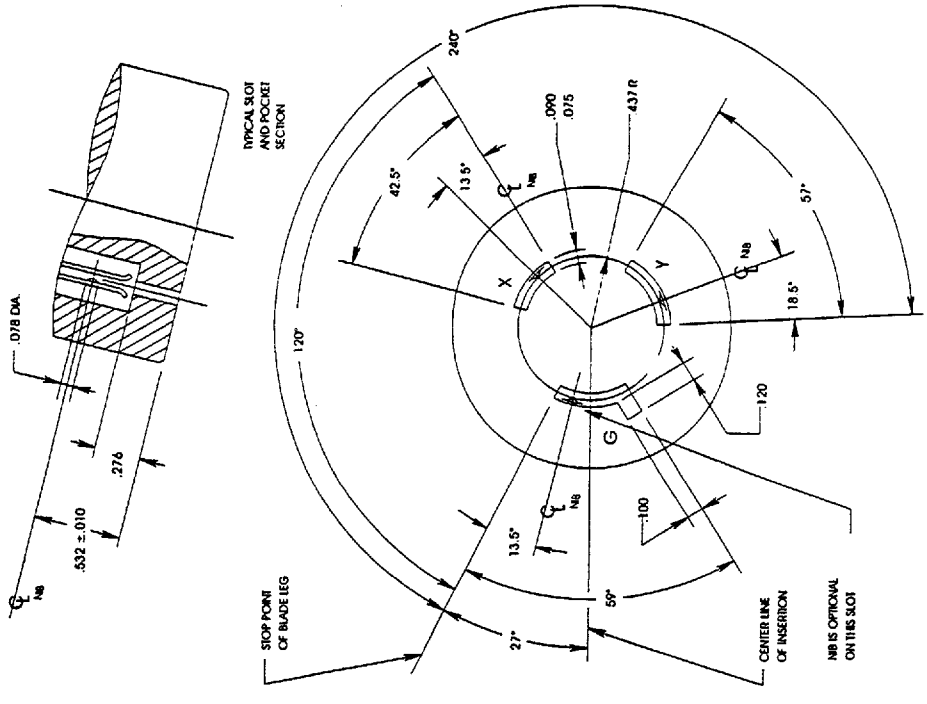

FIGURE L9-20
LOCKING TYPE PLUG AND RECEPTACLE
600 volts AC, 20 amperes, 2 pole, 3 wire, Grounding type

Copyright National Electrical Manufacturers Association
Provided by IHS under license with NEMA
No reproduction or networking permitted without license from IHS

Not for Resale

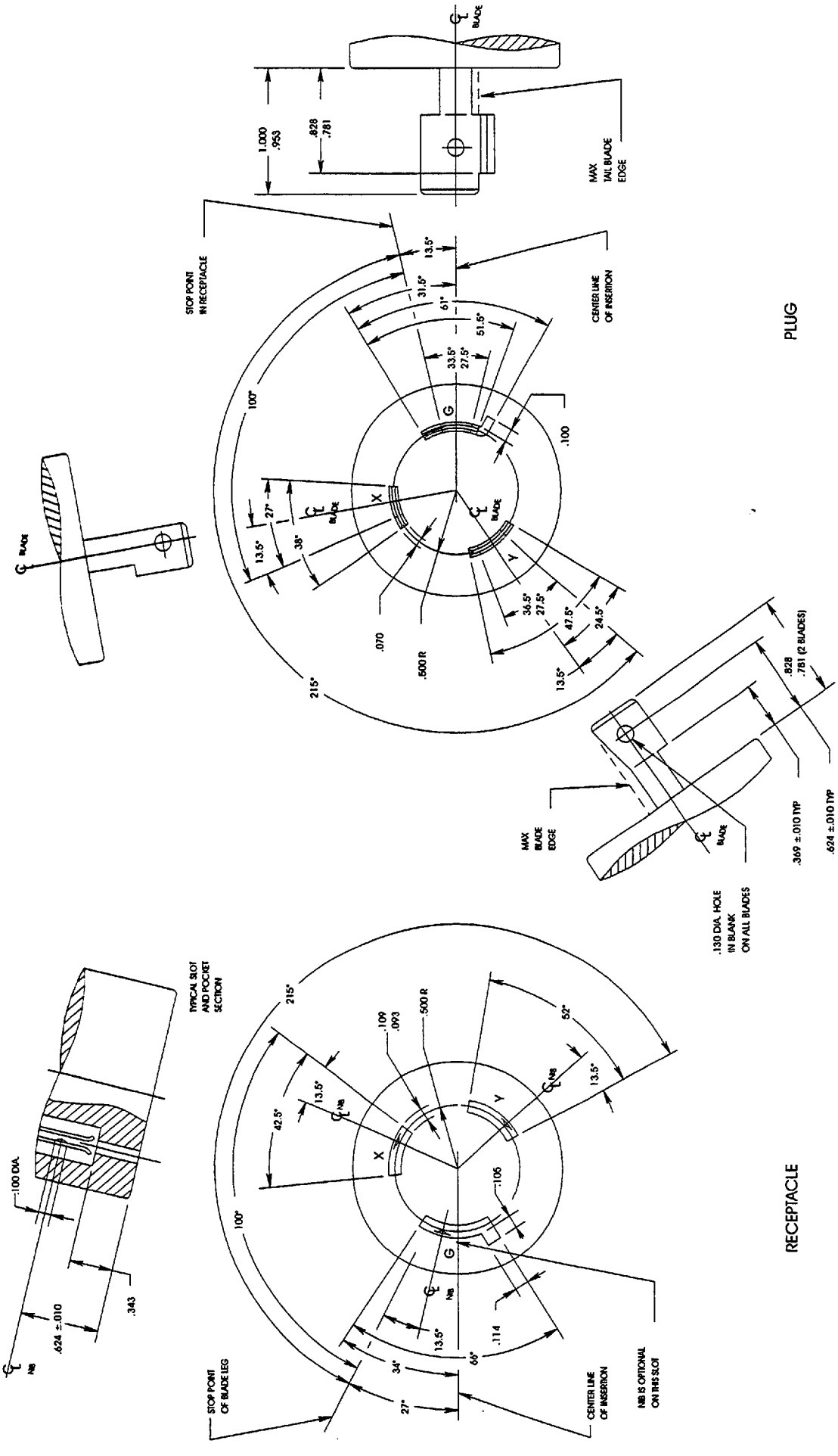

FIGURE 19-30
LOCKING TYPE PLUG AND RECEPTACLE
600 volts AC, 30 amperes, 2 pole, 3 wire, Grounding type

Copyright National Electrical Manufacturers Association
Provided by IHS under license with NEMA
No reproduction or networking permitted without license from IHS

Not for Resale

Copyright National Electrical Manufacturers Association
Provided by IHS under license with NEMA
No reproduction or networking permitted without license from IHS
Not for Resale

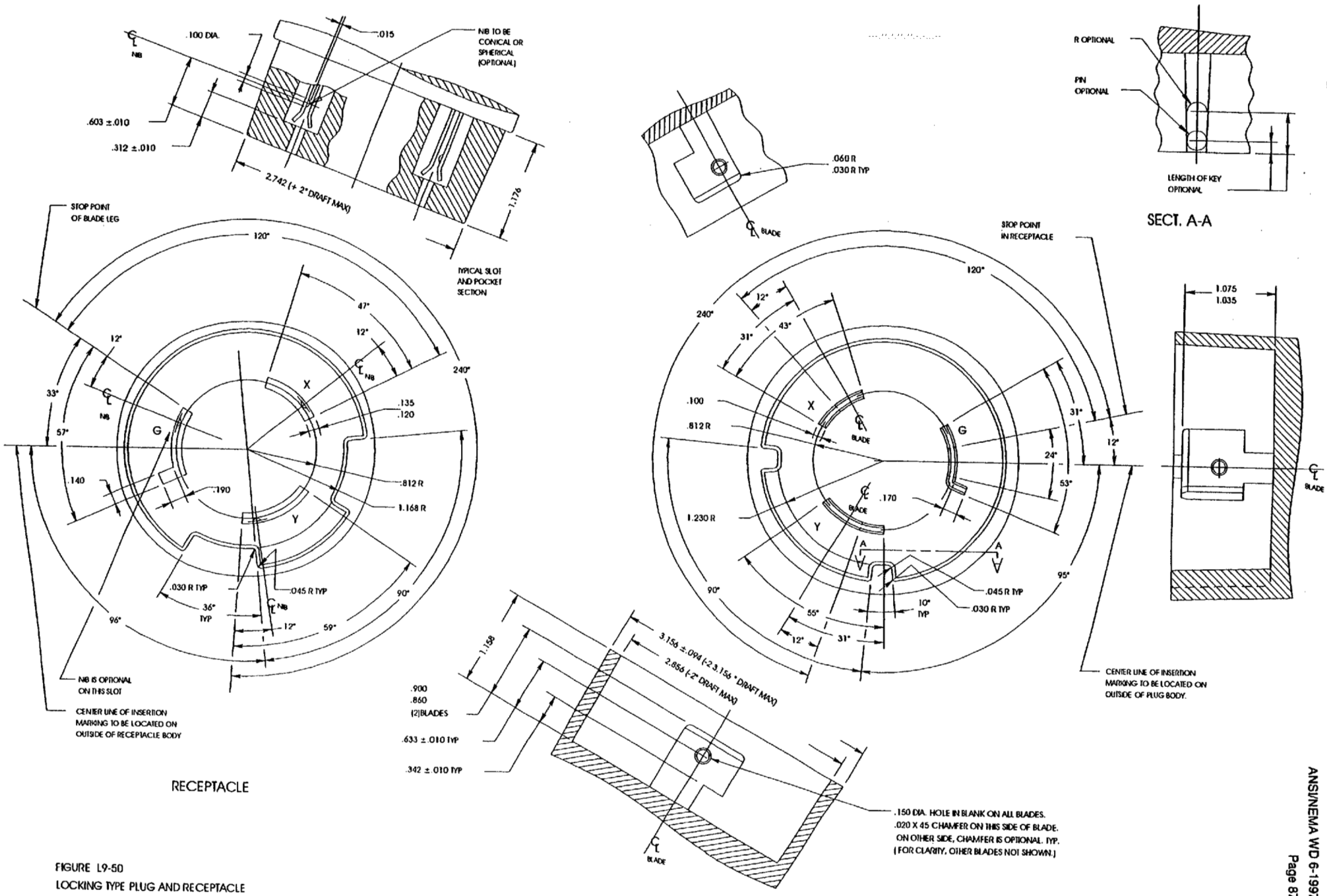

FIGURE L9-50
LOCKING TYPE PLUG AND RECEPTACLE
600 volts AC, 50 amperes, 2 pole, 3 wire, Grounding type

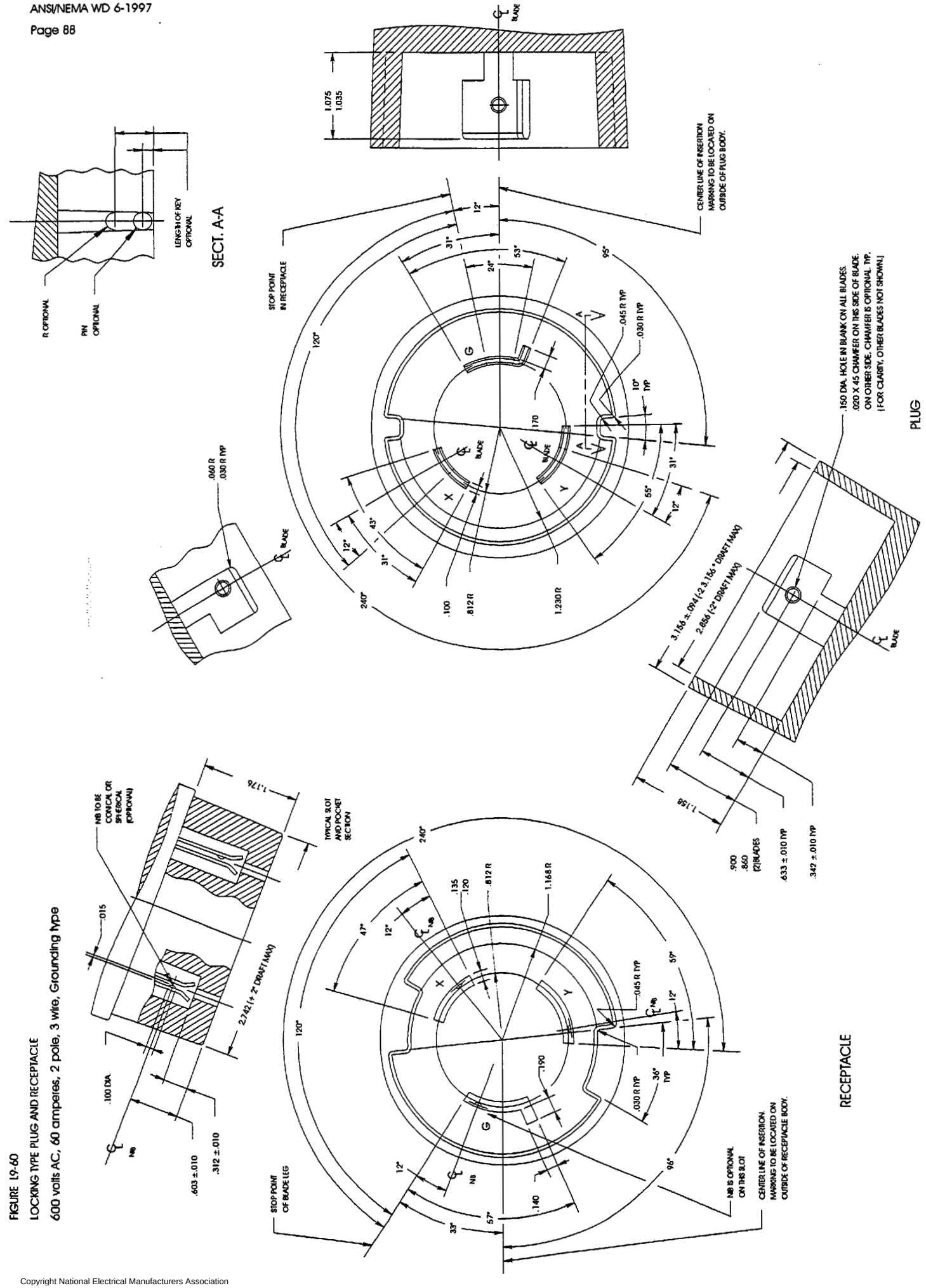

FIGURE 19-60

LOCKING TYPE PLUG AND RECEPTACLE

600 volts AC, 60 amperes, 2 pole, 3 wire, Grounding Type

Copyright National Electrical Manufacturers Association
Provided by IHS under license with NEMA
No reproduction or networking permitted without license from IHS

Not for Resale

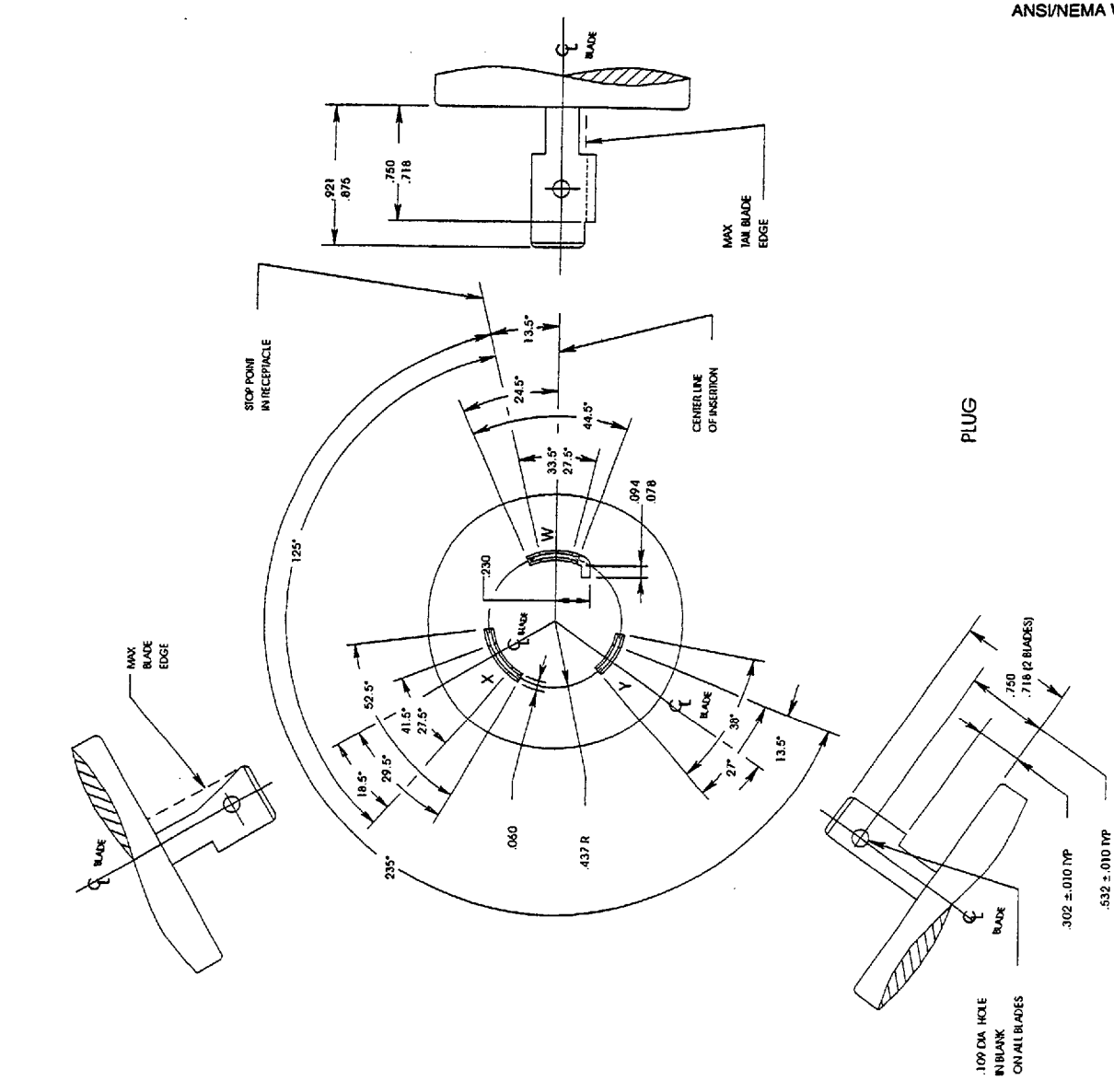

FIGURE L10-20
LOCKING TYPE PLUG AND RECEPTACLE
125/250 volts, 20 amperes, 3 pole, 3 wire

Copyright National Electrical Manufacturers Association
Provided by IHS under license with NEMA
No reproduction or networking permitted without license from IHS

Not for Resale

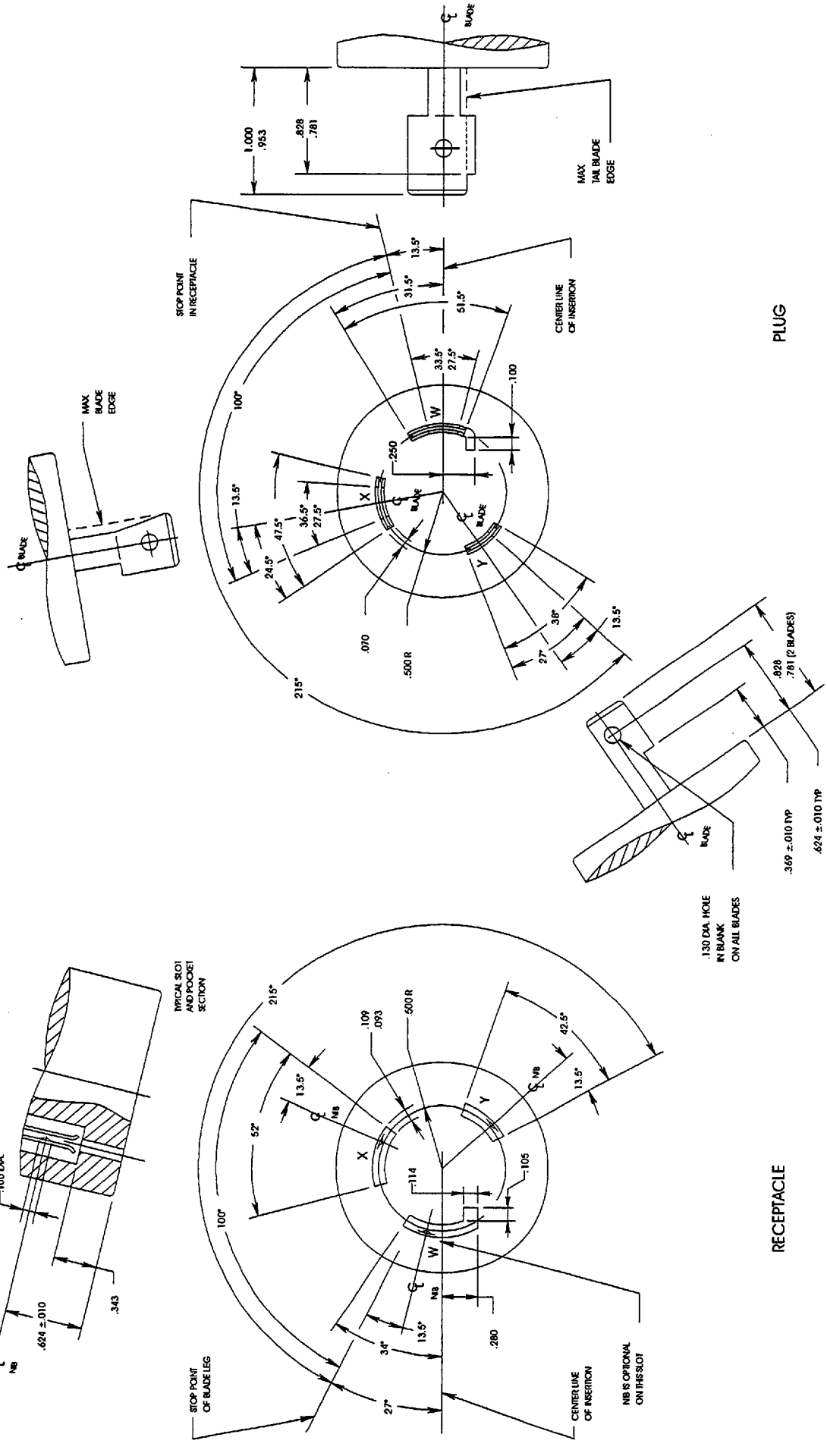

FIGURE L10-30
LOCKING TYPE PLUG AND RECEPTACLE
125/250 volts, 30 amperes, 3 pole, 3 wire

Copyright National Electrical Manufacturers Association
Provided by IHS under license with NEMA
No reproduction or networking permitted without license from IHS

Not for Resale

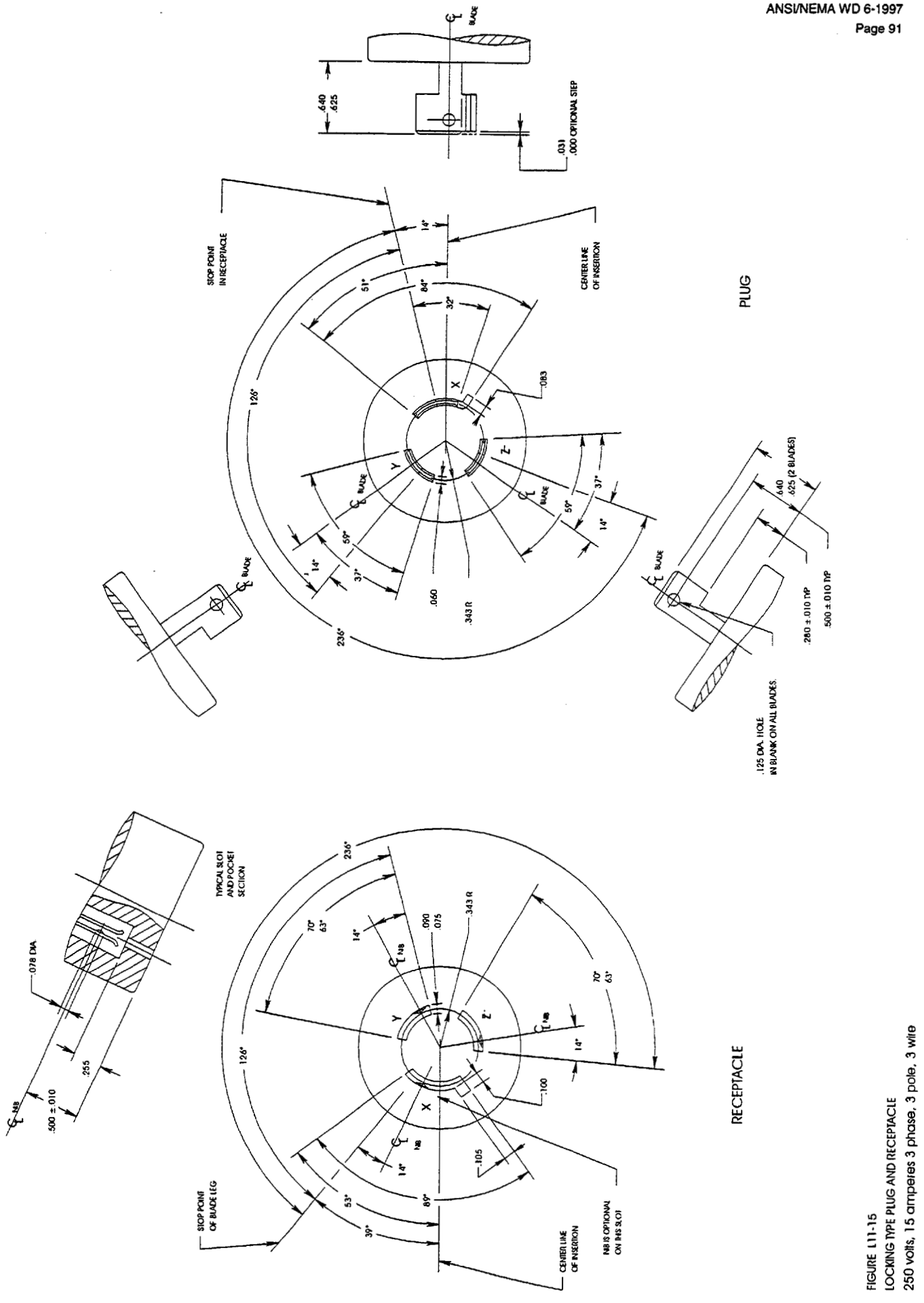

FIGURE 111-15
LOCKING TYPE PLUG AND RECEPTACLE
250 volts, 15 amperes 3 phase, 3 pole, 3 wire

Copyright National Electrical Manufacturers Association
Provided by IHS under license with NEMA
No reproduction or networking permitted without license from IHS

Not for Resale

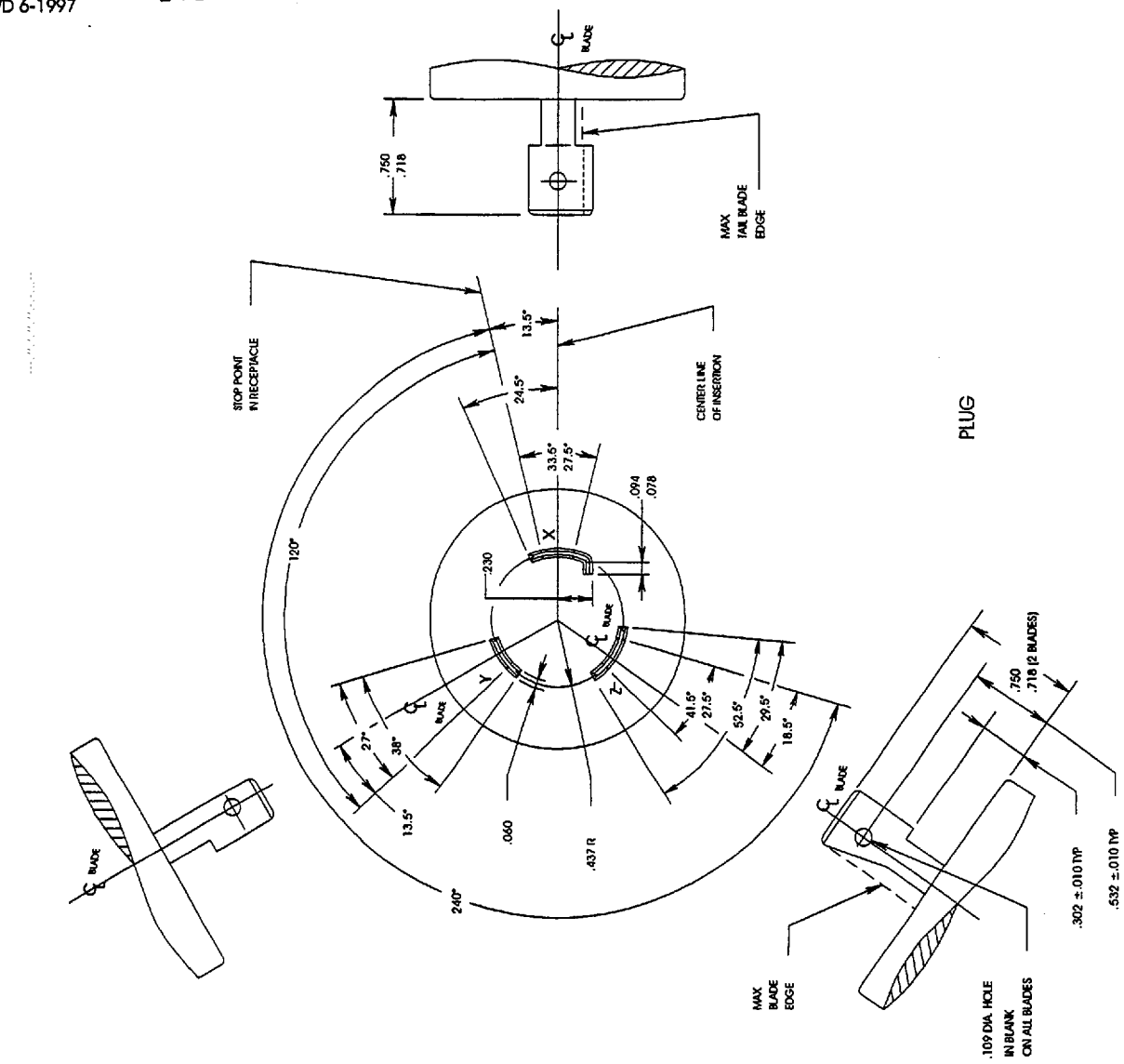

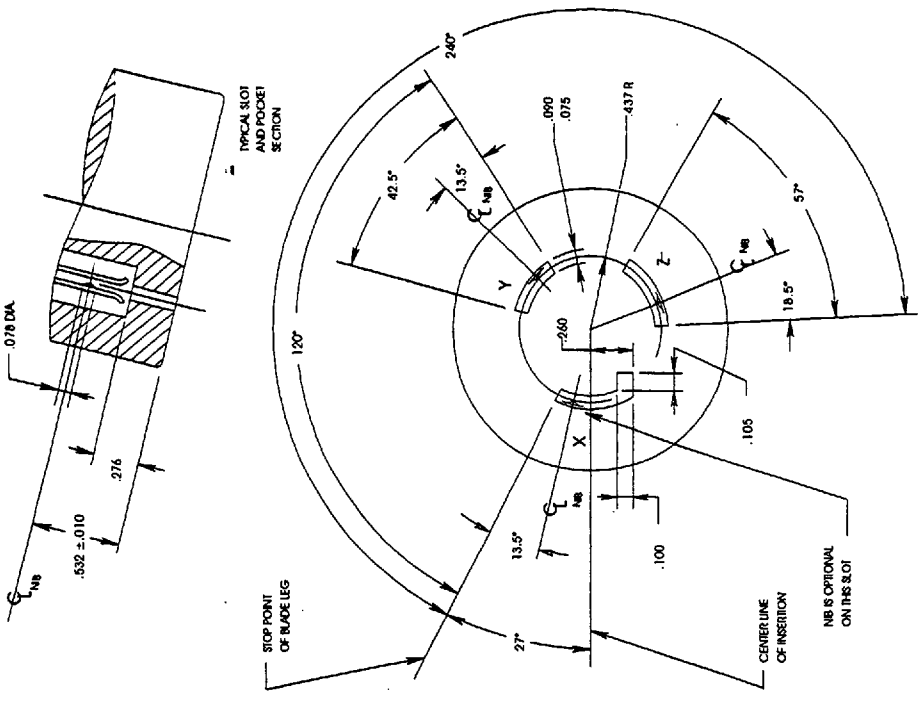

FIGURE L11-20
LOCKING TYPE PLUG AND RECEPTACLE
250 volts, 20 amperes, 3 phase, 3 pole, 3 wire

Copyright National Electrical Manufacturers Association
Provided by IHS under license with NEMA
No reproduction or networking permitted without license from IHS

Not for Resale

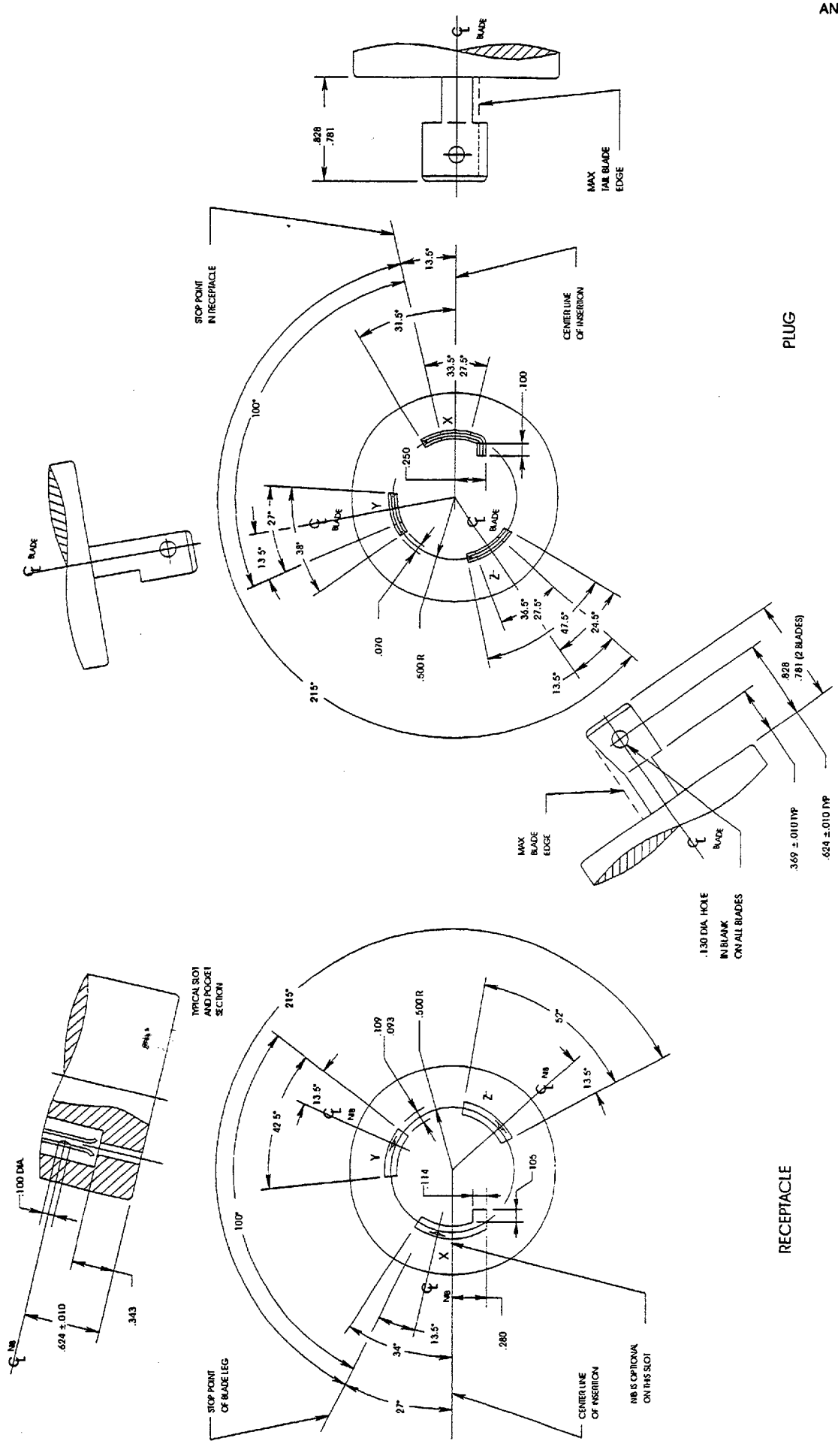

FIGURE 111-30
LOCKING TYPE PLUG AND RECEPTACLE
250 volts, 30 amperes, 3 phase ,3 pole, 3 wire

Copyright National Electrical Manufacturers Association
Provided by IHS under license with NEMA
No reproduction or networking permitted without license from IHS

Not for Resale

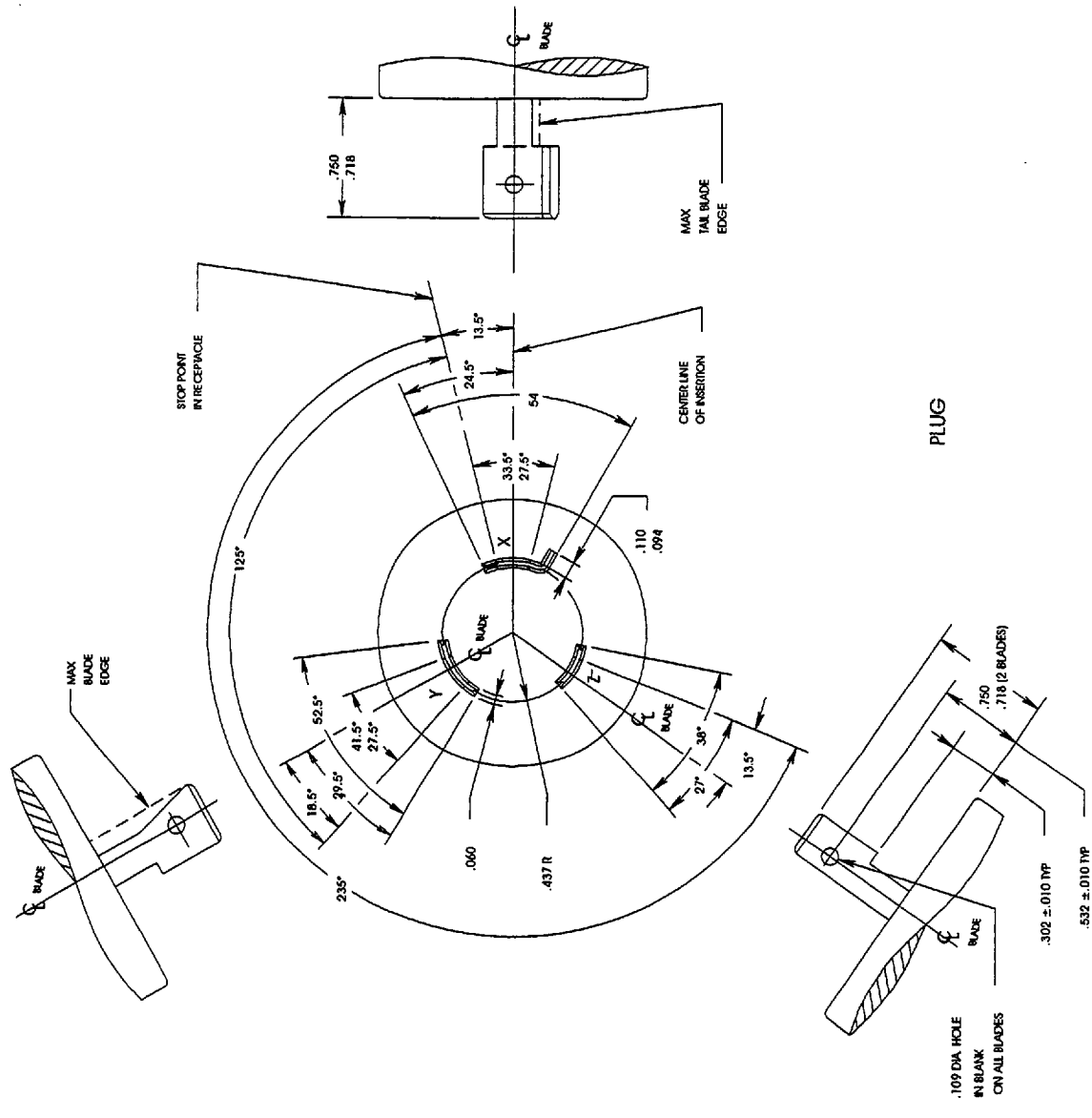

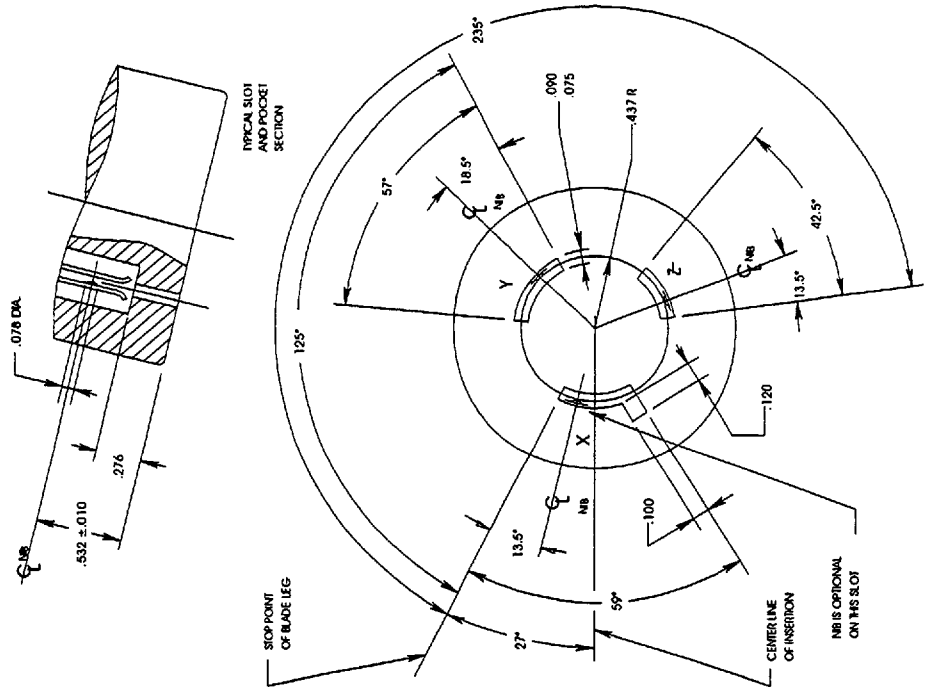

FIGURE 1 12-20
LOCKING TYPE PLUG AND RECEPTACLE
480 volts , 20 amperes, 3 phase, 3 pole, 3 wire

Copyright National Electrical Manufacturers Association
Provided by IHS under license with NEMA
No reproduction or networking permitted without license from IHS
Not for Resale

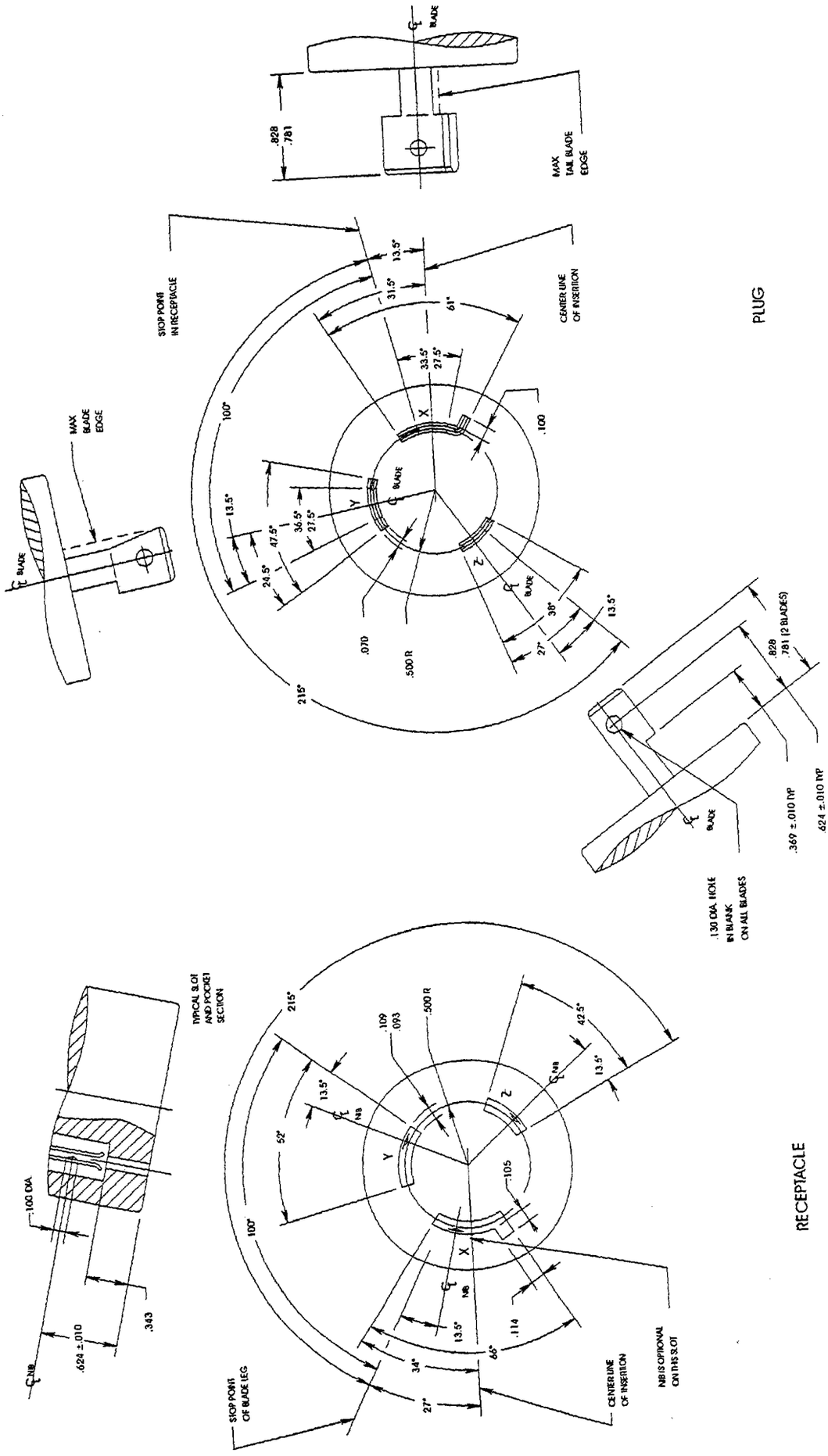

FIGURE 1.12-3D
LOCKING TYPE PLUG AND RECEPTACLE
480 volts, 30 amperes, 3 phase, 3 pole, 3 wire

Copyright National Electrical Manufacturers Association
Provided by IHS under license with NEMA
No reproduction or networking permitted without license from IHS

Not for Resale

FIGURE L13-30
LOCKING TYPE PLUG AND RECEPTACLE
600 volts, 30 amperes, 3 phase, 3 pole, 3 wire

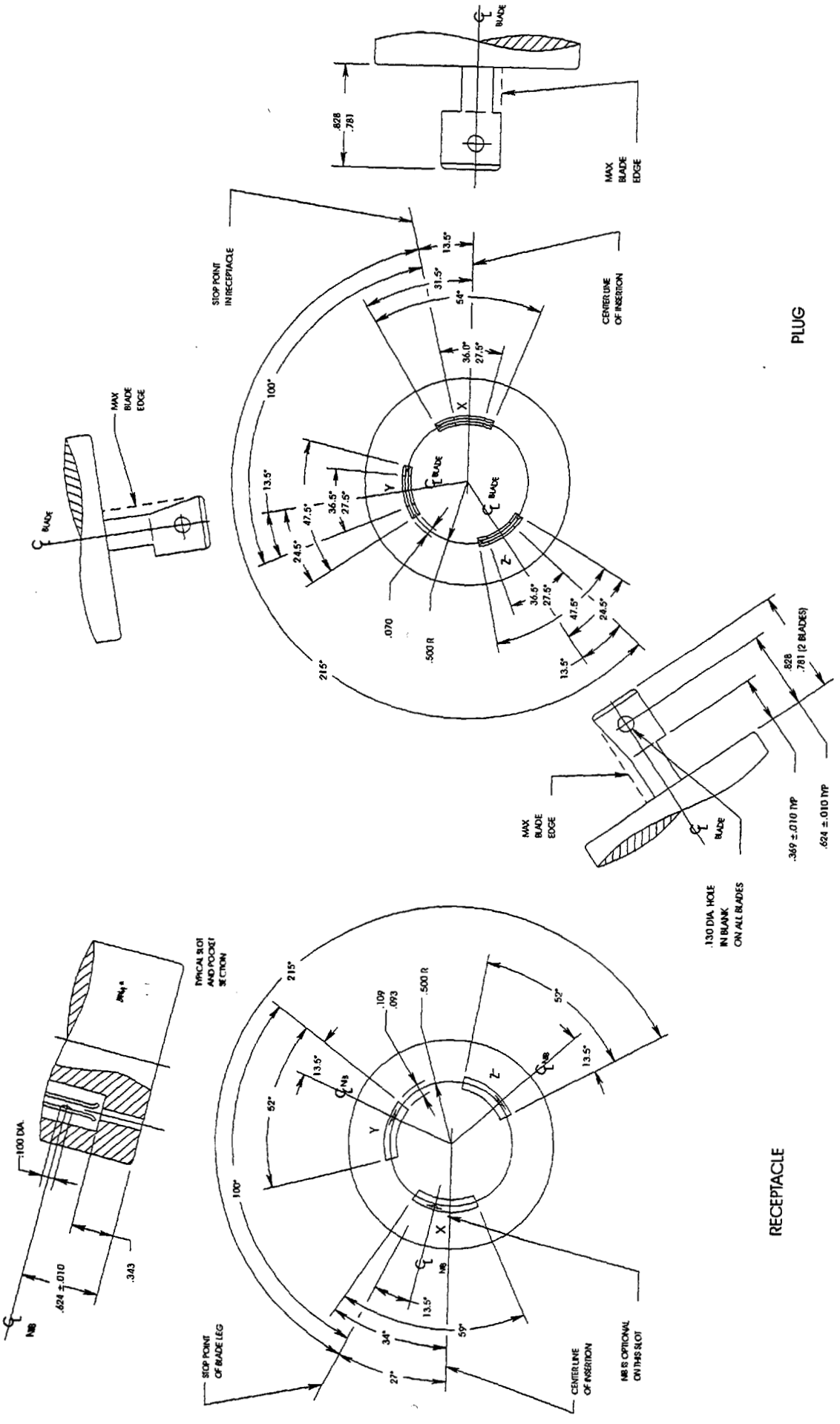

Copyright National Electrical Manufacturers Association
Provided by IHS under license with NEMA
No reproduction or networking permitted without license from IHS
Not for Resale

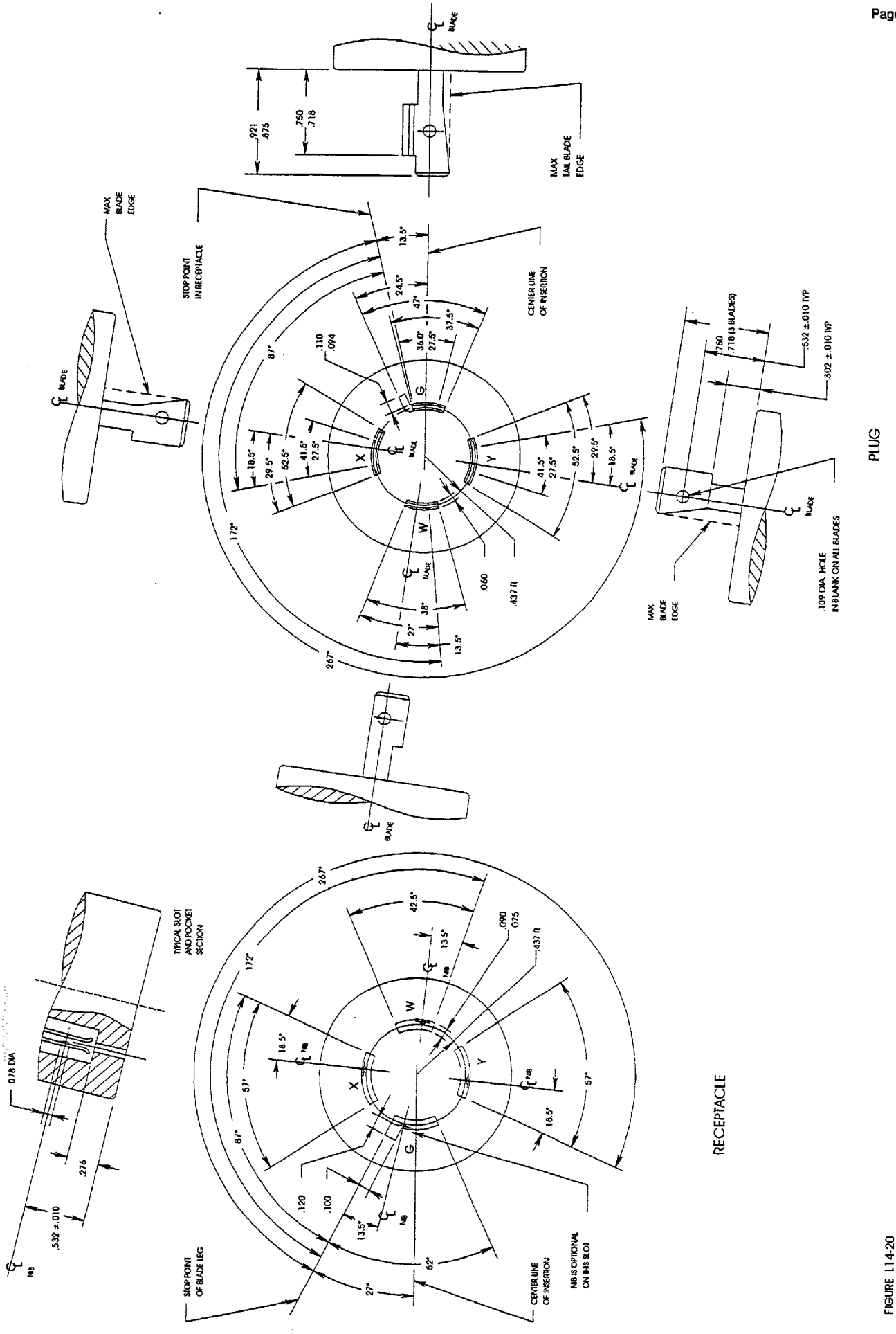

FIGURE L14-20
LOCKING TYPE PLUG AND RECEPTACLE
125/250 volts, 20 amperes, 3 pole, 4 wire, Grounding type

Copyright National Electrical Manufacturers Association
Provided by IHS under license with NEMA
No reproduction or networking permitted without license from IHS

Not for Resale

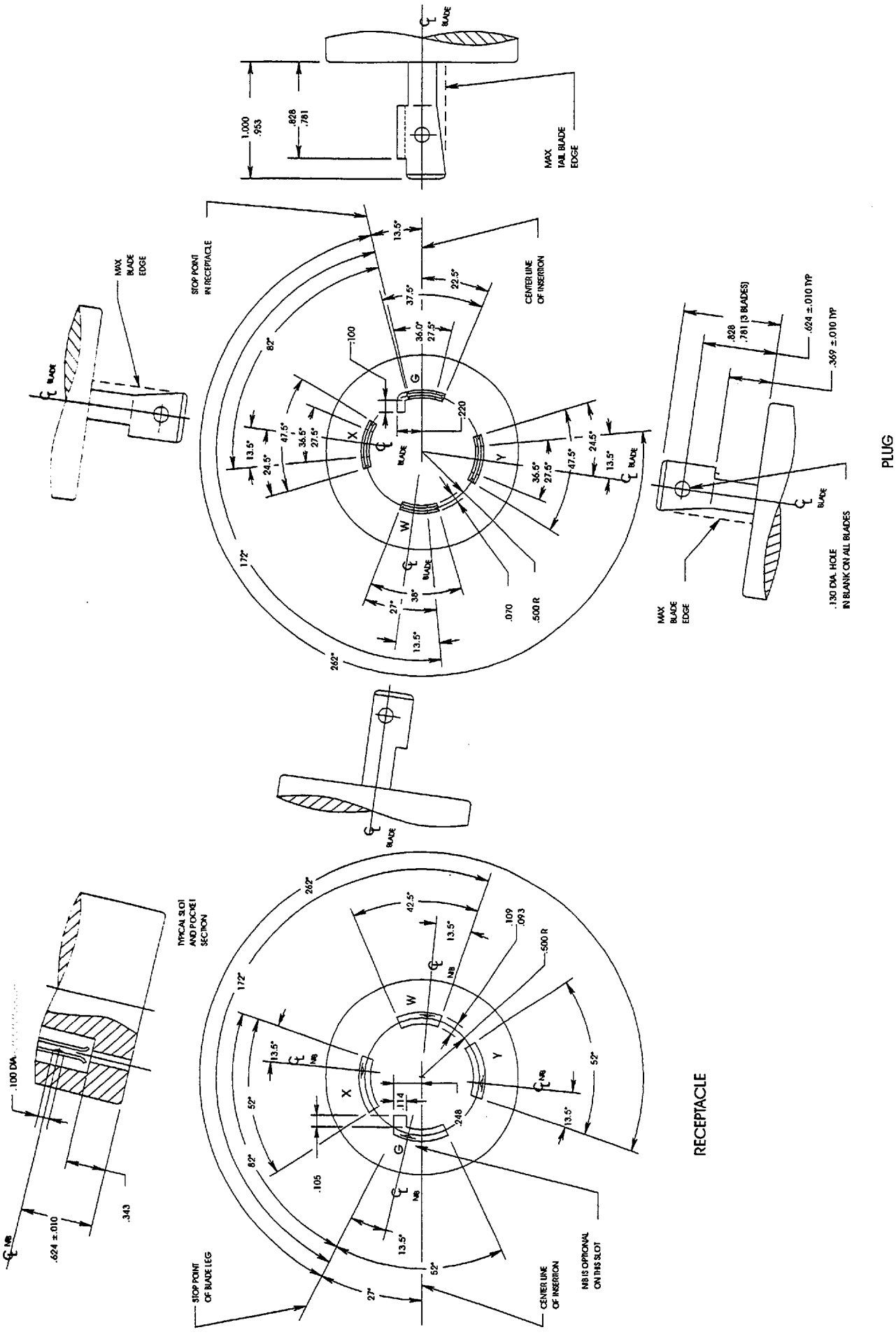

FIGURE L14-30

LOCKING TYPE PLUG AND RECEPTACLE

125/250 volts, 30 amperes, 3 pole, 4 wire, Grounding type

Copyright National Electrical Manufacturers Association
Provided by IHS under license with NEMA
No reproduction or networking permitted without license from IHS

Not for Resale

Copyright National Electrical Manufacturers Association
Provided by IHS under license with NEMA
No reproduction or networking permitted without license from IHS
Not for Resale

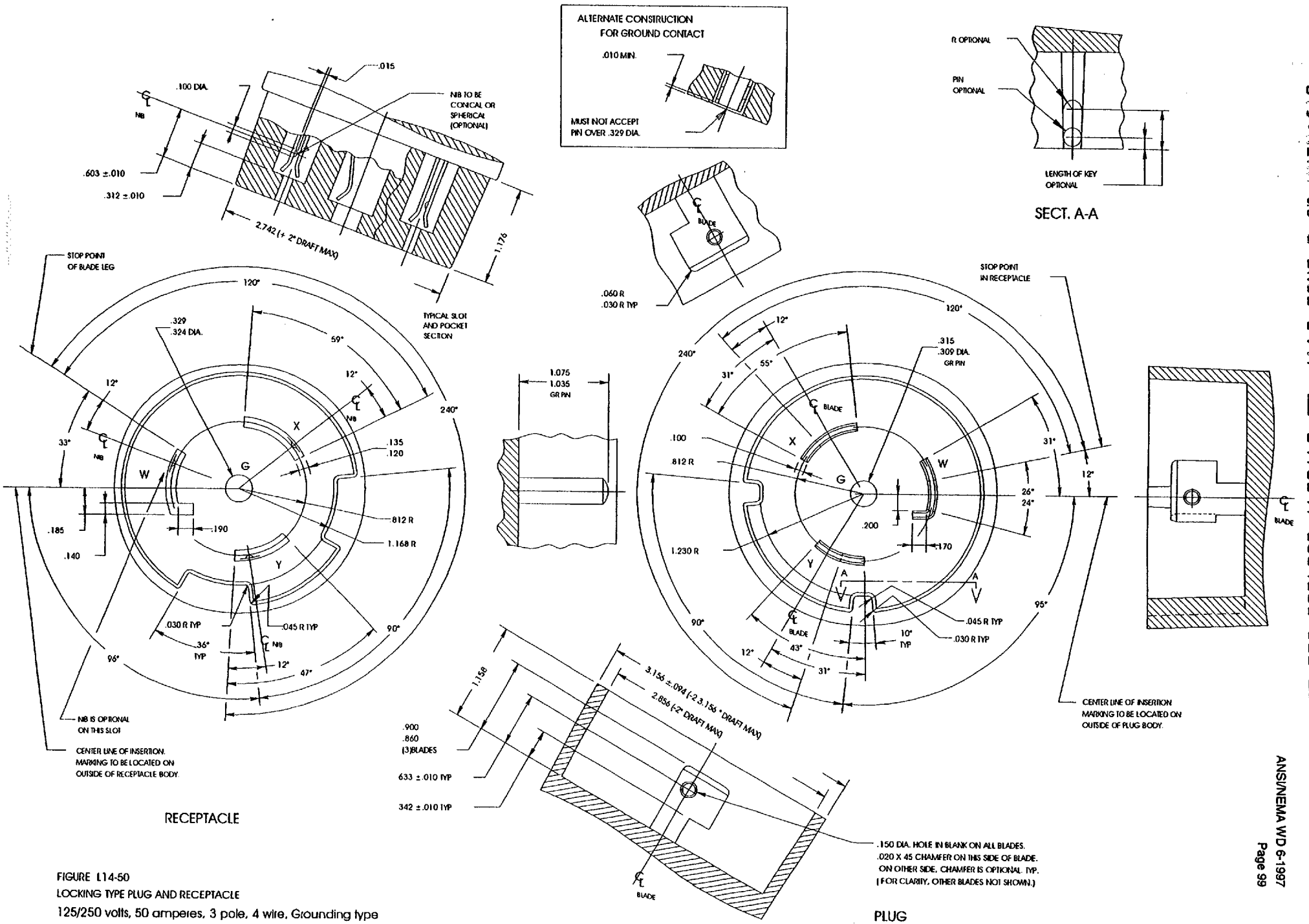

FIGURE L14-50
LOCKING TYPE PLUG AND RECEPTACLE
125/250 volts, 50 amperes, 3 pole, 4 wire, Grounding type

LOCKING TYPE PLUG AND RECEPTACLE

125/250 volts, 60 amperes, 3 pole, 4 wire, Grounding type

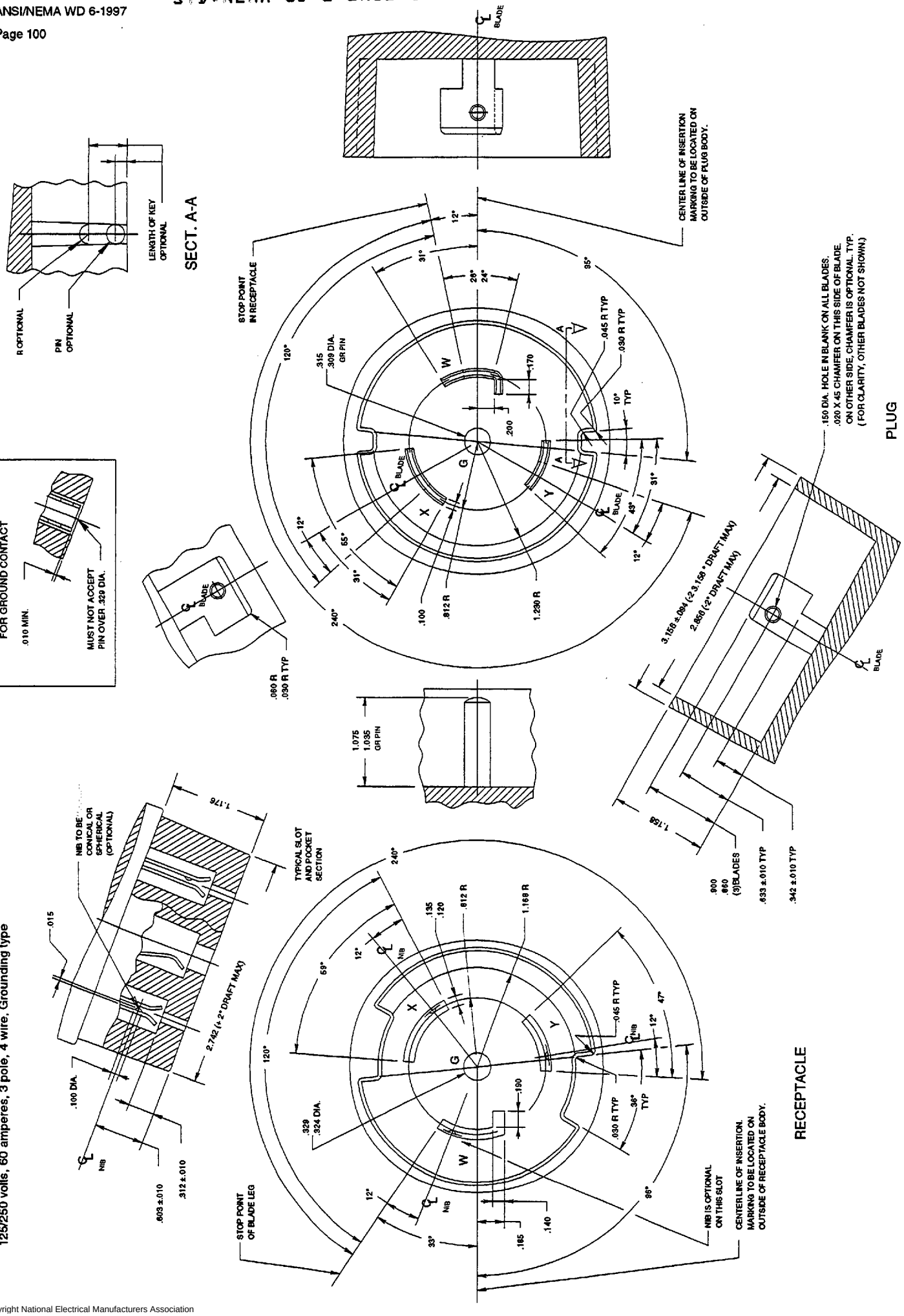

Copyright National Electrical Manufacturers Association
Provided by IHS under license with NEMA
No reproduction or networking permitted without license from IHS

Not for Resale

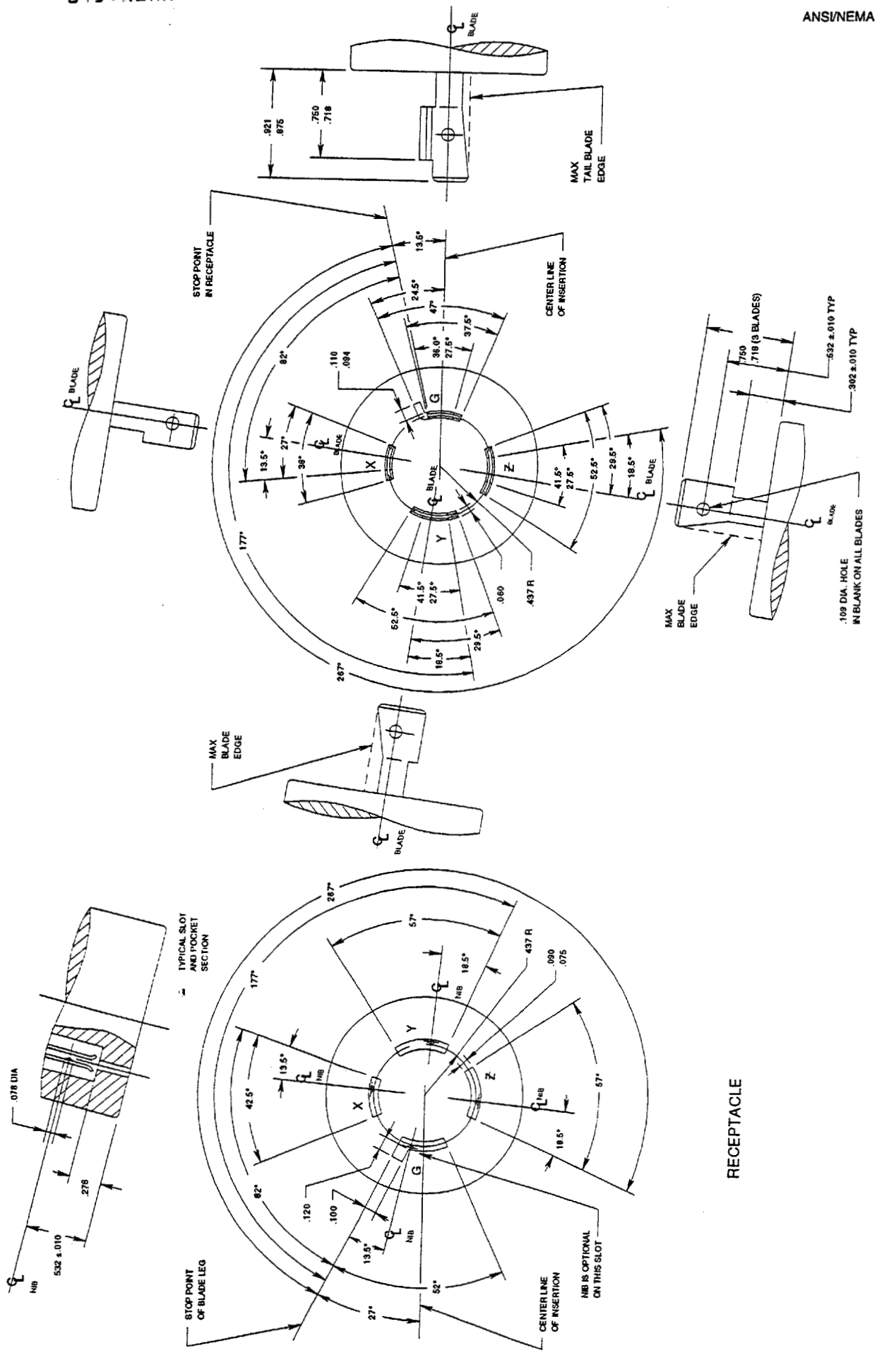

FIGURE L15-20
LOCKING TYPE PLUG AND RECEPTACLE
250 volts, 20 amperes 3 phase, 3 pole, 4 wire, Grounding type

Copyright National Electrical Manufacturers Association
Provided by IHS under license with NEMA
No reproduction or networking permitted without license from IHS

Not for Resale

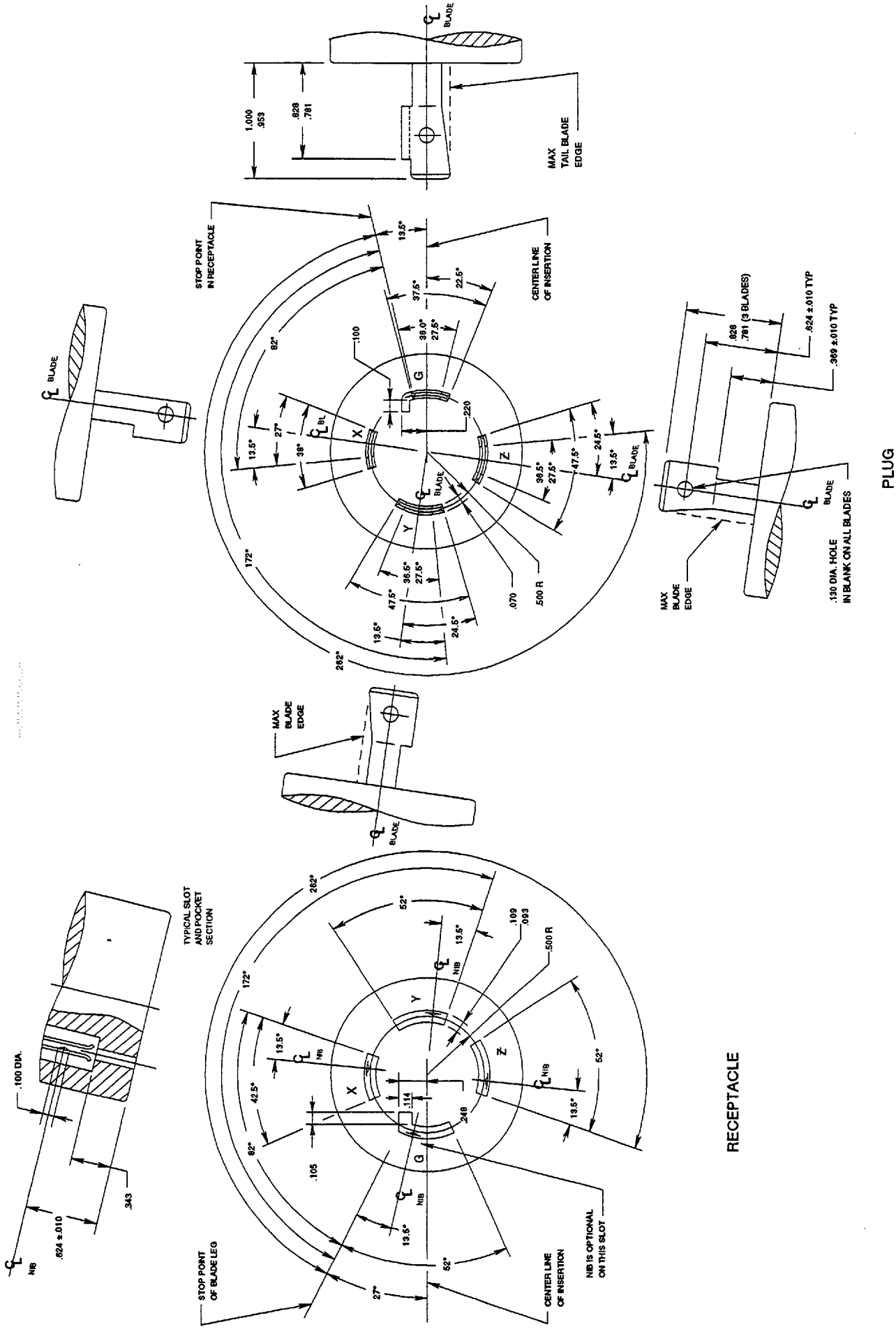

FIGURE L15-30

LOCKING TYPE PLUG AND RECEPTACLE

250 volts, 30 amperes, 3 phase, 3 pole, 4 wire, Grounding type

Copyright National Electrical Manufacturers Association
Provided by IHS under license with NEMA
No reproduction or networking permitted without license from IHS

Not for Resale

Copyright National Electrical Manufacturers Association
Provided by IHS under license with NEMA
No reproduction or networking permitted without license from IHS
Not for Resale

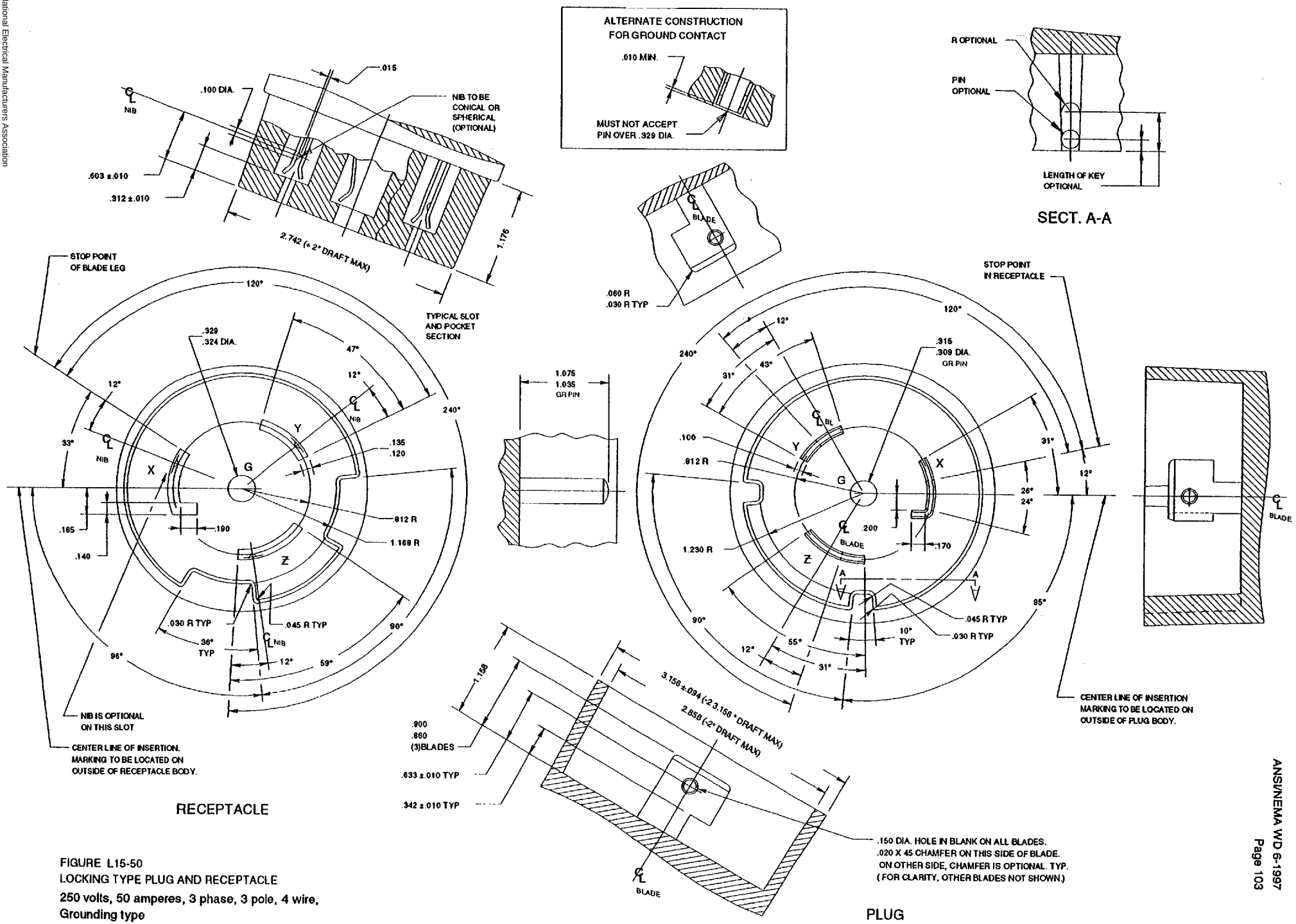

FIGURE L15-50
LOCKING TYPE PLUG AND RECEPTACLE
250 volts, 50 amperes, 3 phase, 3 pole, 4 wire,
Grounding type

Copyright National Electrical Manufacturers Association
Provided by IHS under license with NEMA
No reproduction or networking permitted without license from IHS
Not for Resale

FIGURE L15-60

LOCKING TYPE PLUG AND RECEPTACLE

250 volts, 60 amperes, 3 phase, 3 pole, 4 wire, Grounding type

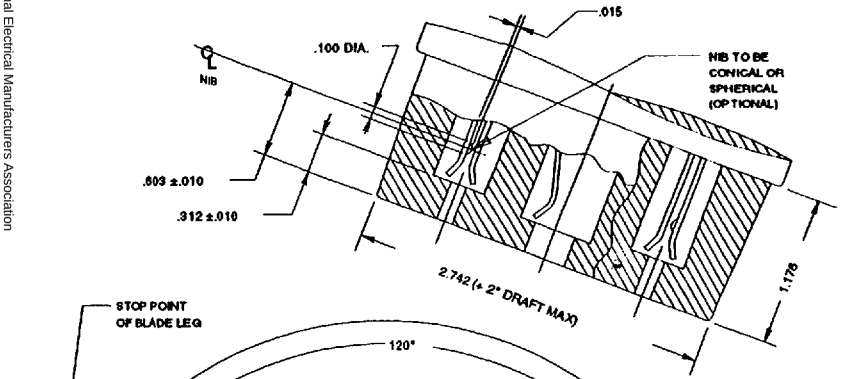

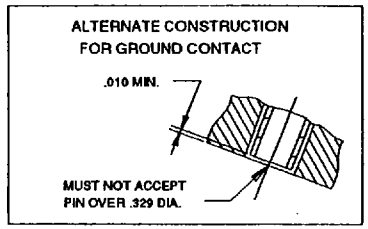

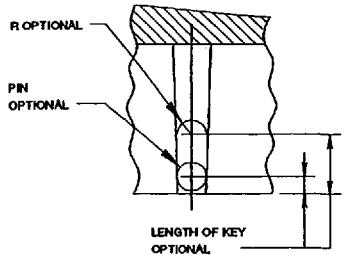

SECT. A-A

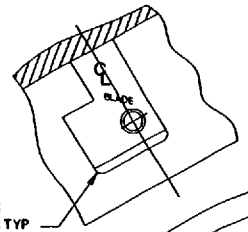

TYPICAL SLOT AND POCKET SECTION

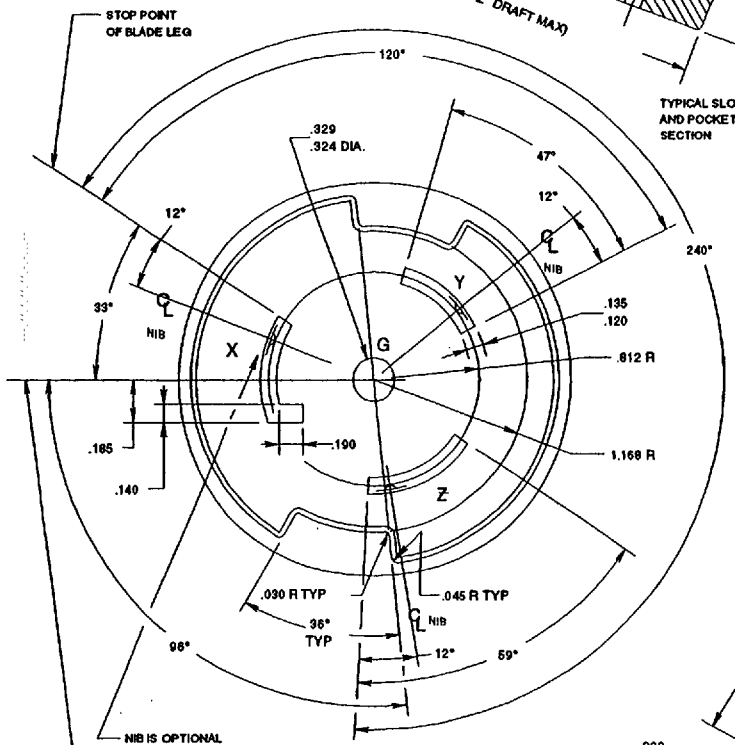

RECEPTACLE

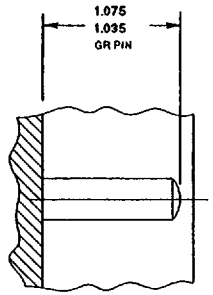

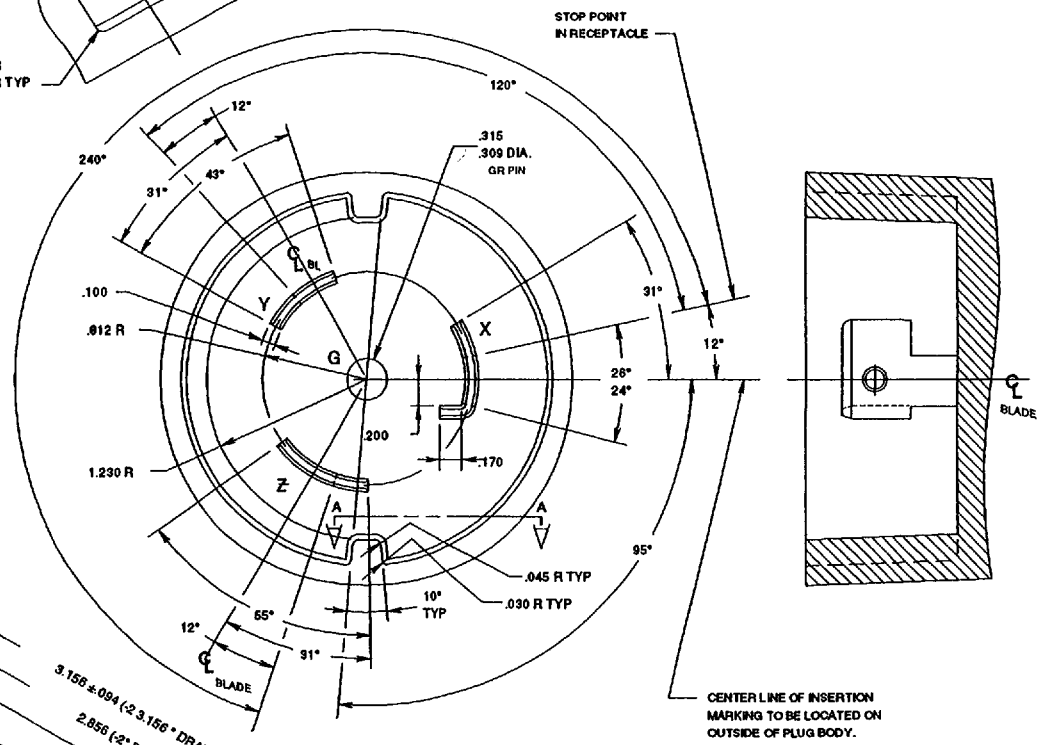

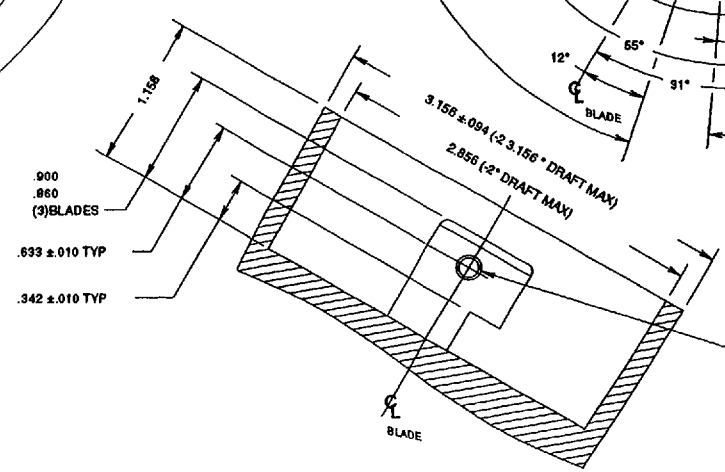

PLUG

STD-NEMA WD 6-ENGL 1997 ■ 6470247 0514615 304 ■

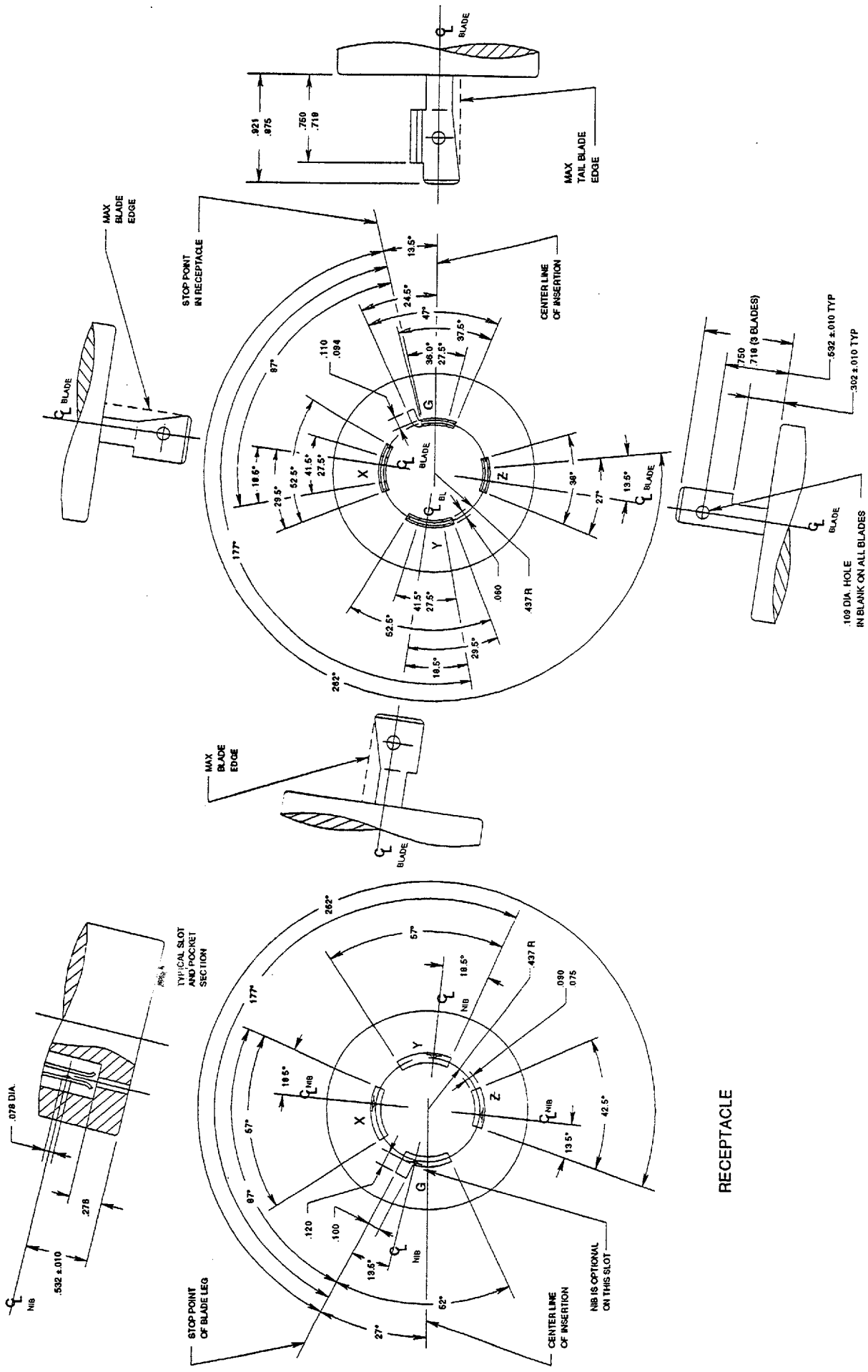

FIGURE L16-20
LOCKING TYPE PLUG AND RECEPTACLE
480 volts, 20 amperes, 3 phase, 3 pole, 4 wire, Grounding type

Copyright National Electrical Manufacturers Association
Provided by IHS under license with NEMA
No reproduction or networking permitted without license from IHS

Not for Resale

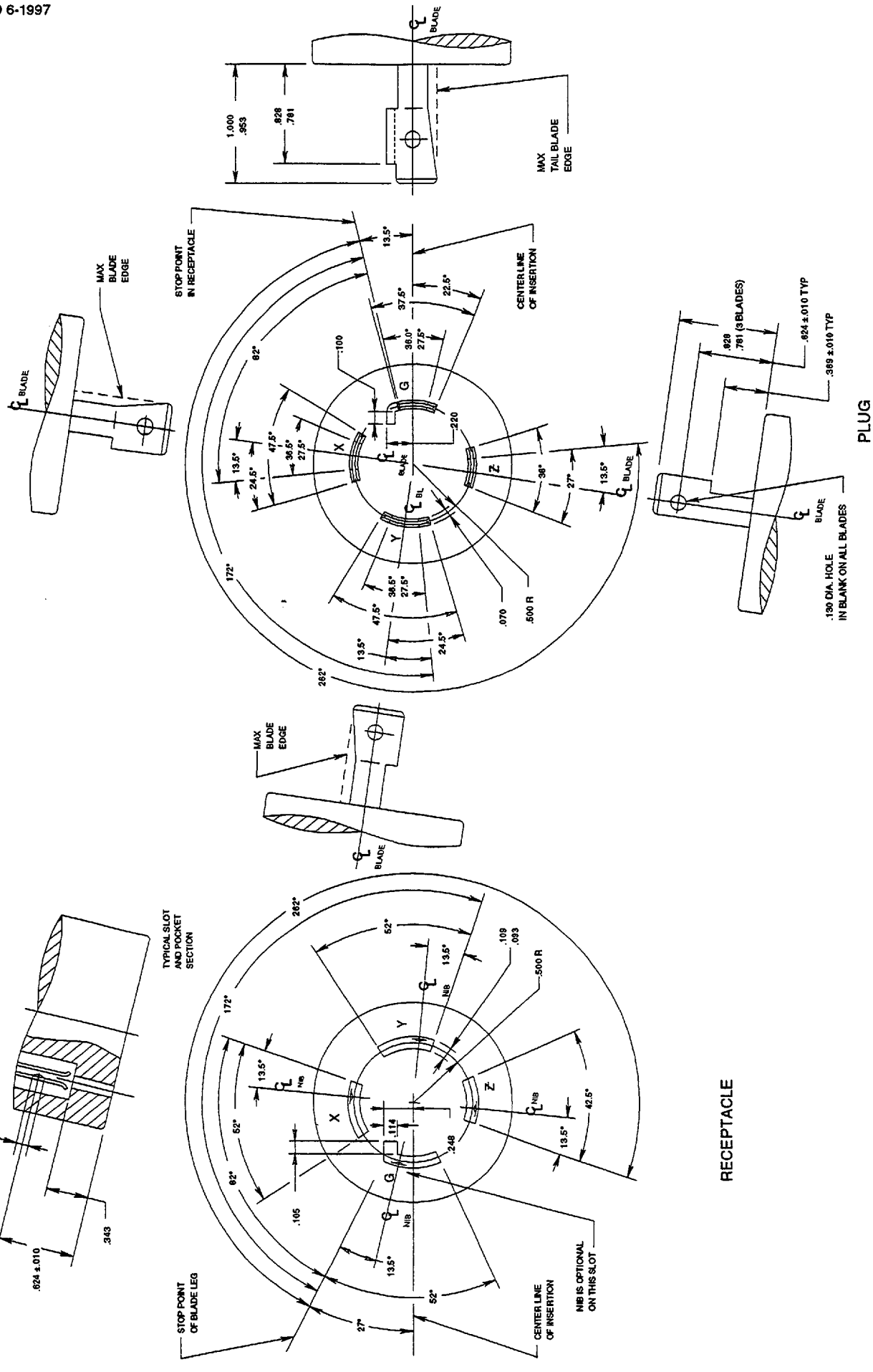

FIGURE L16-30
LOCKING TYPE PLUG AND RECEPTACLE
480 volts, 30 amperes, 3 phase, 3 pole, 4 wire, Grounding type

Copyright National Electrical Manufacturers Association
Provided by IHS under license with NEMA
No reproduction or networking permitted without license from IHS

Not for Resale

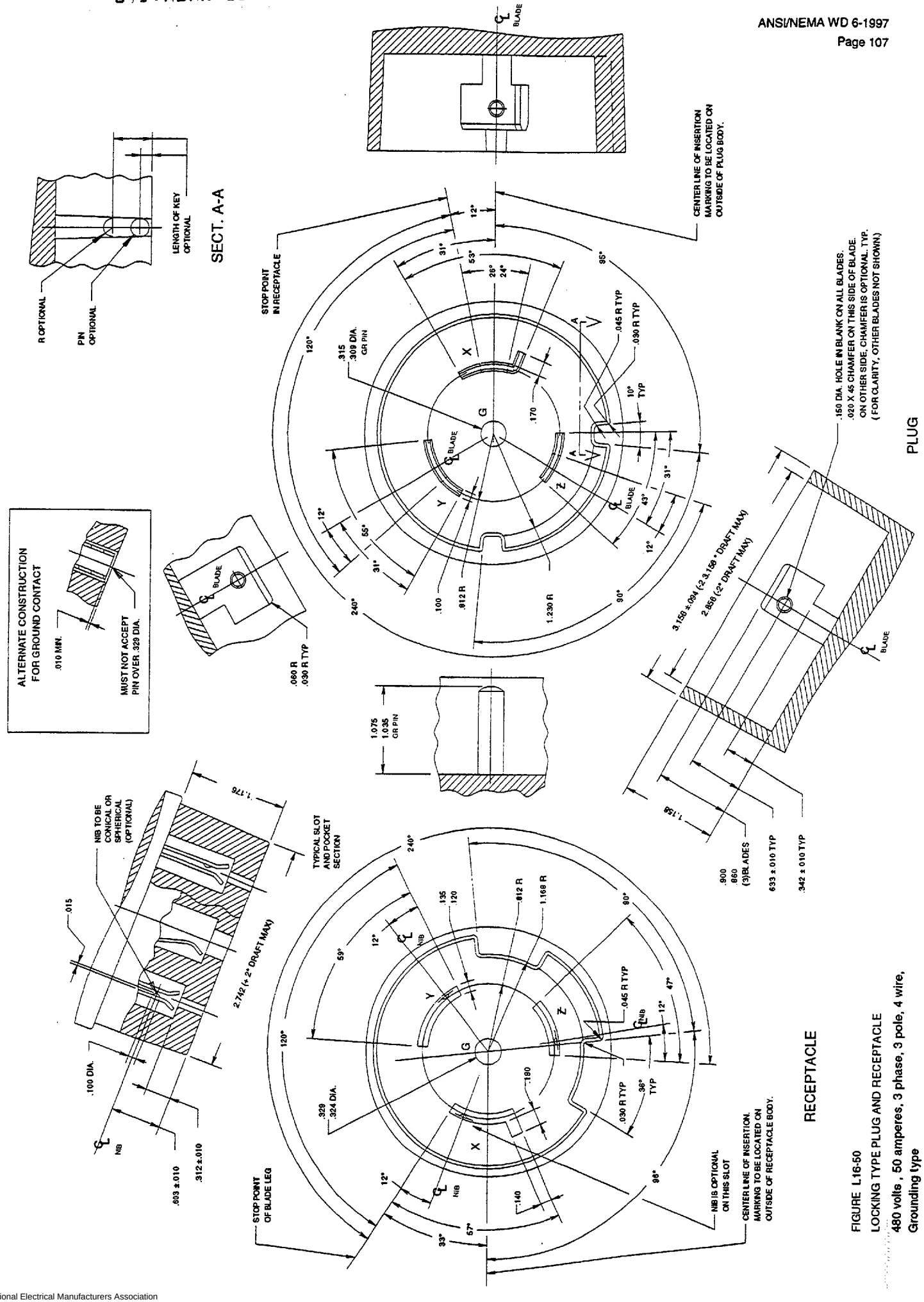

FIGURE L16-50
LOCKING TYPE PLUG AND RECEPTACLE
480 volts , 50 amperes, 3 phase, 3 pole, 4 wire, Grounding type

Copyright National Electrical Manufacturers Association
Provided by IHS under license with NEMA
No reproduction or networking permitted without license from IHS

Not for Resale

Copyright National Electrical Manufacturers Association
Provided by IHS under license with NEMA
No reproduction or networking permitted without license from IHS

Not for Resale

FIGURE L16-60
LOCKING TYPE PLUG AND RECEPTACLE
480 volts , 60 amperes, 3 phase, 3 pole, 4 wire,
Grounding type

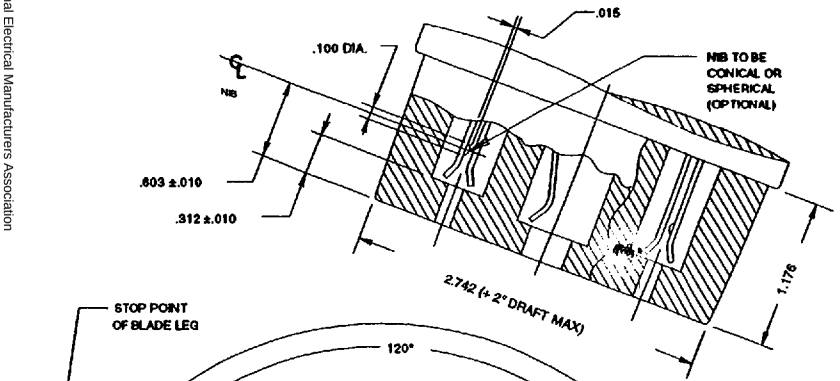

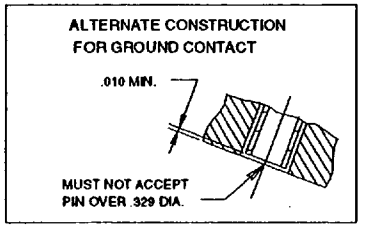

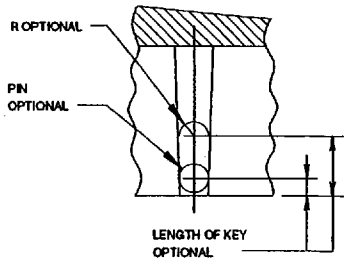

SECT. A-A

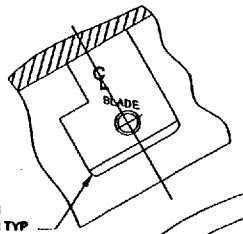

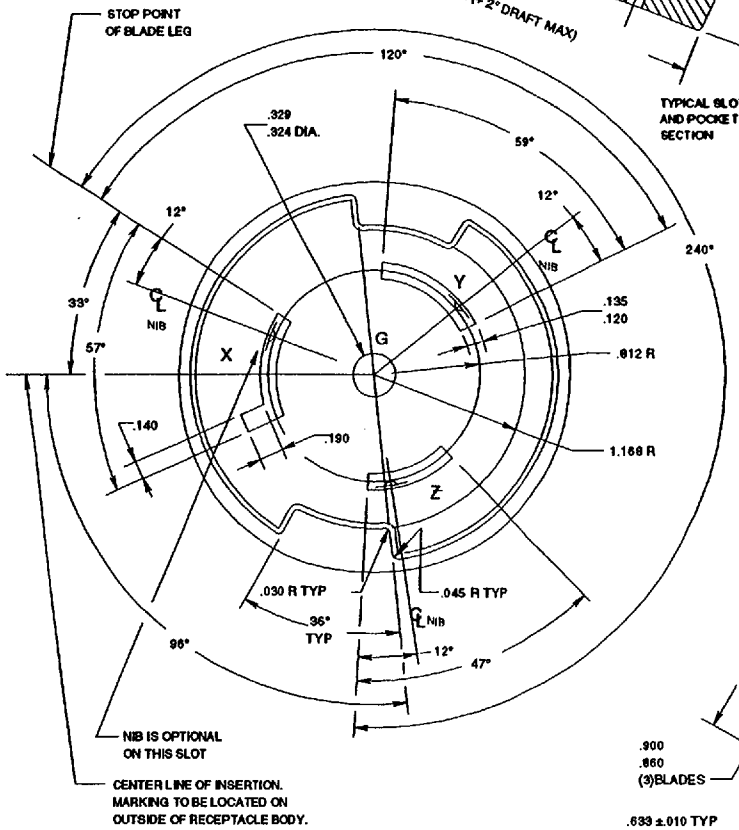

RECEPTACLE

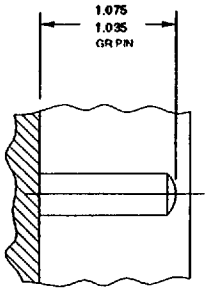

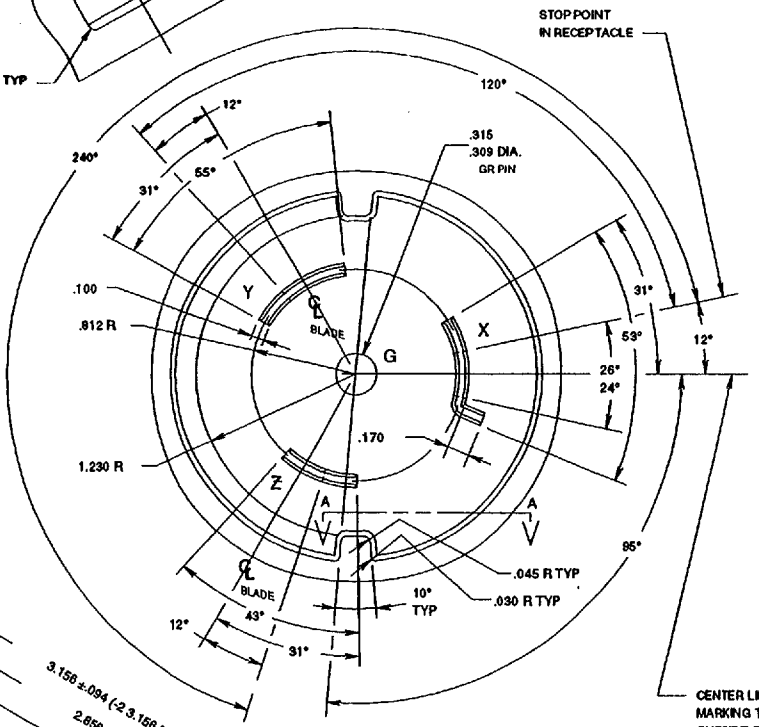

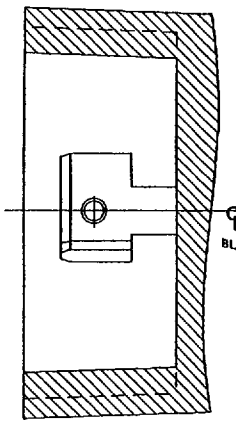

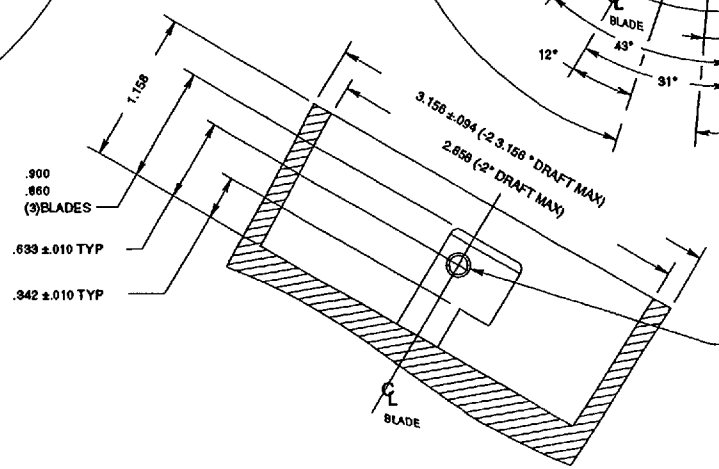

PLUG

STD.NEMA WD 6-ENGL 1997 ■ 6470247 0514619 T5T ■

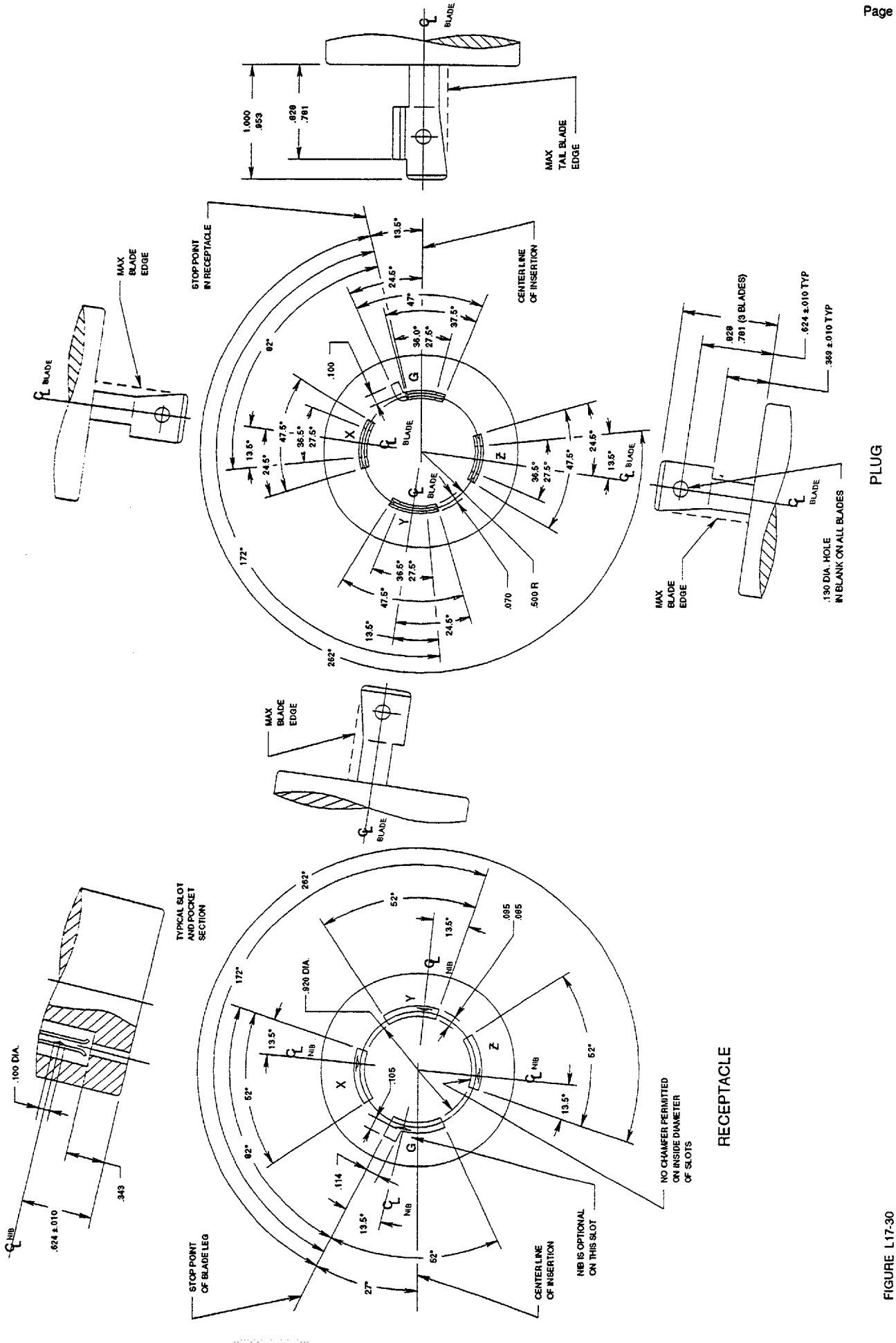

FIGURE L17-30
LOCKING TYPE PLUG AND RECEPTACLE
600 volts, 30 amperes, 3 phase, 3 pole, 4 wire, Grounding type

Copyright National Electrical Manufacturers Association
Provided by IHS under license with NEMA
No reproduction or networking permitted without license from IHS

Not for Resale

LOCKING TYPE PLUG AND RECEPTACLE
600 volts, 50 amperes, 3 pole, 4 wire, Grounding type

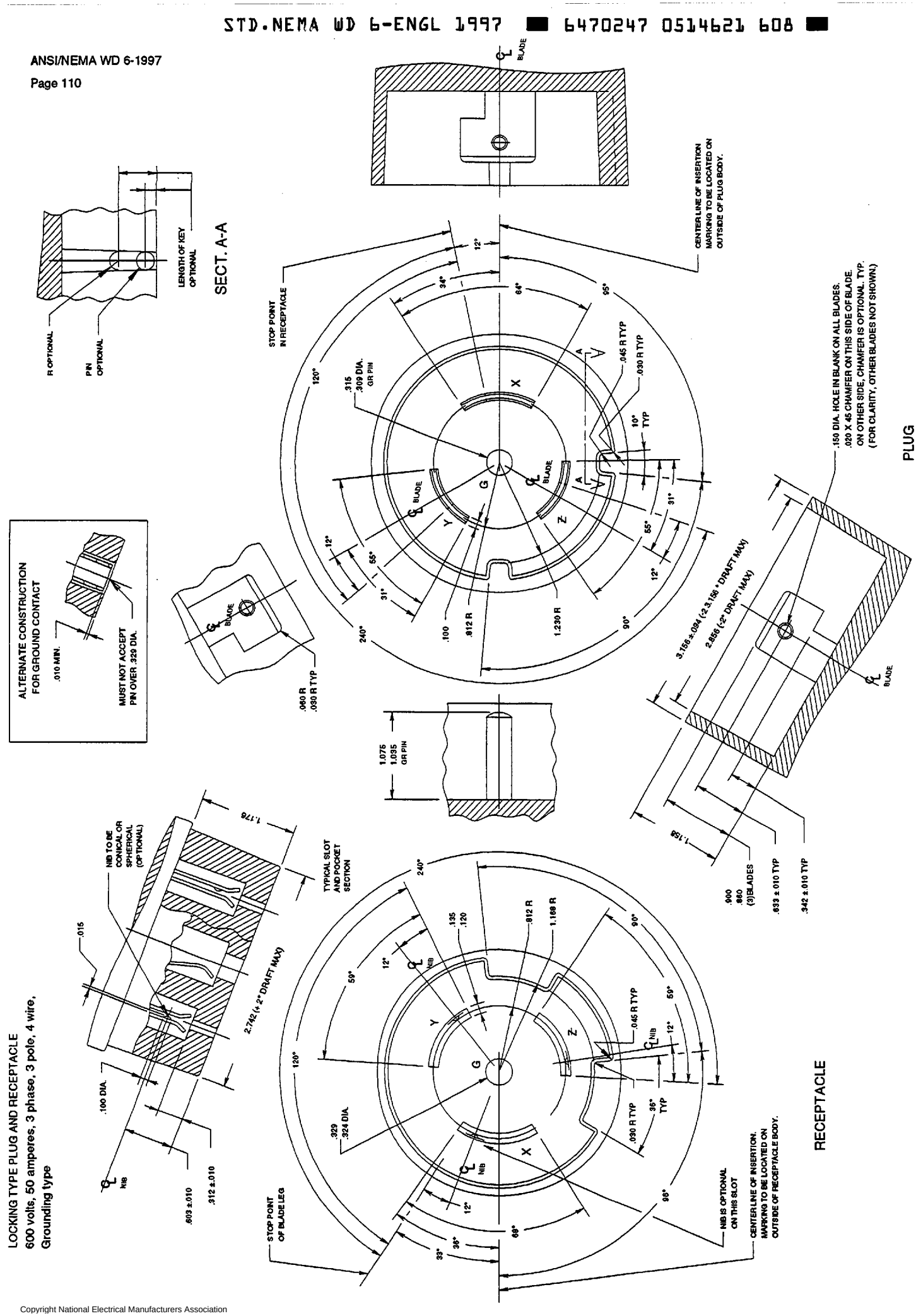

Copyright National Electrical Manufacturers Association
Provided by IHS under license with NEMA
No reproduction or networking permitted without license from IHS
Not for Resale

Copyright National Electrical Manufacturers Association
Provided by IHS under license with NEMA
No reproduction or networking permitted without license from IHS
Not for Resale

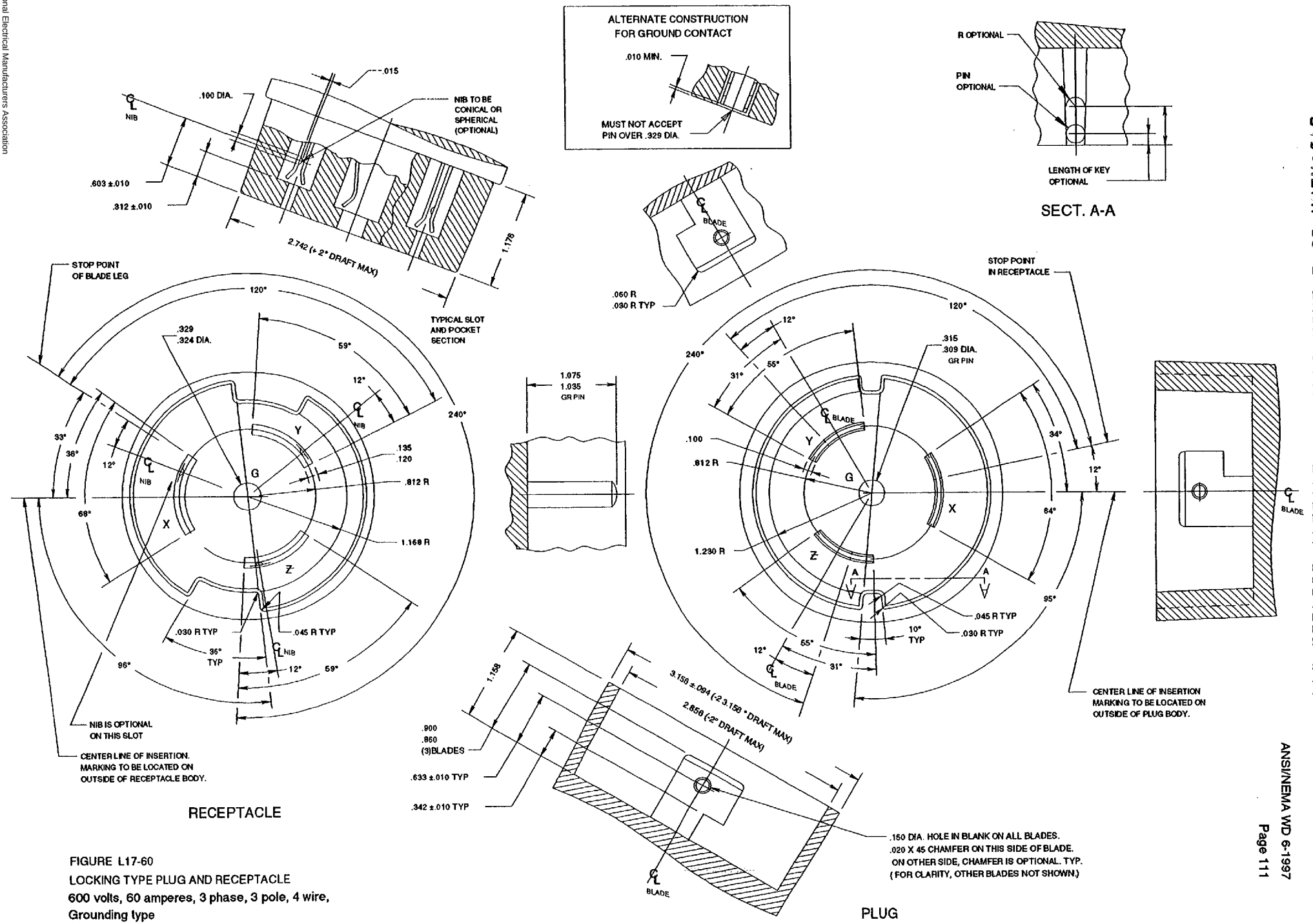

FIGURE L17-60
LOCKING TYPE PLUG AND RECEPTACLE
600 volts, 60 amperes, 3 phase, 3 pole, 4 wire,
Grounding type

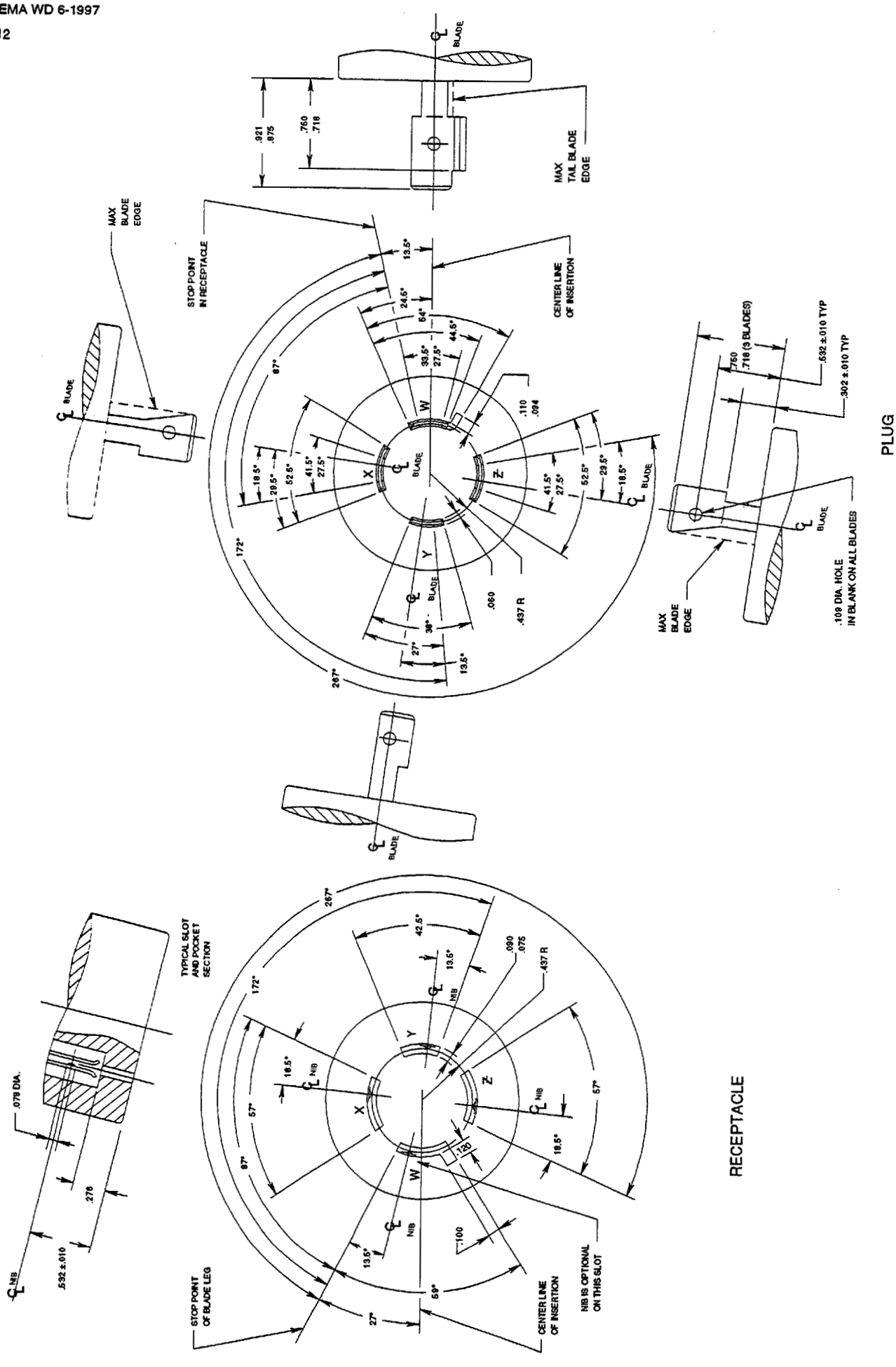

FIGURE L18-20
LOCKING TYPE PLUG AND RECEPTACLE
120/208 volts, 20 amperes, 3 phase Y, 4 pole, 4 wire

Copyright National Electrical Manufacturers Association
Provided by IHS under license with NEMA
No reproduction or networking permitted without license from IHS

Not for Resale

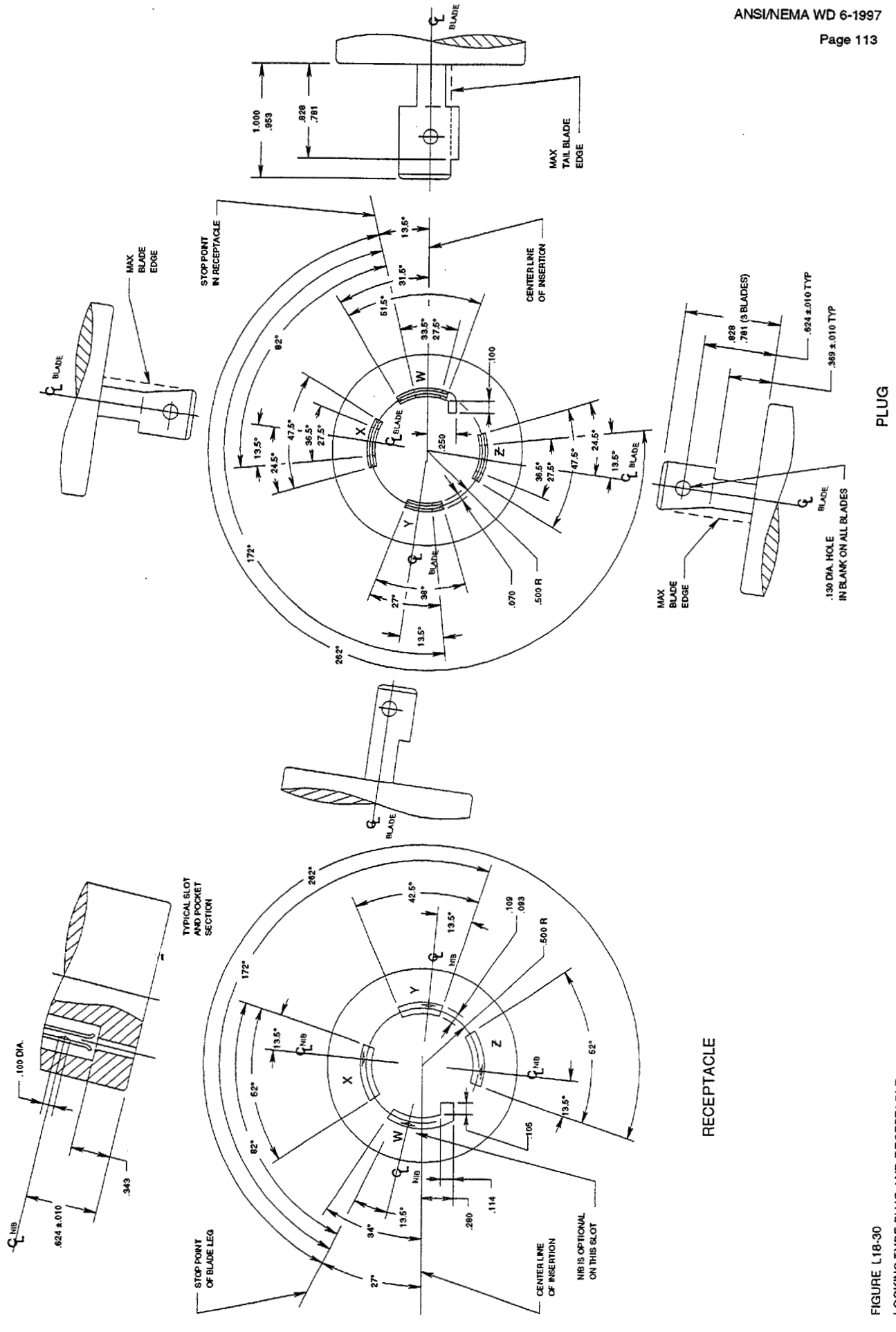

FIGURE L18-30
LOCKING TYPE PLUG AND RECEPTACLE
120/208 volts, 30 amperes, 3 phase Y, 4 pole, 4 wire

Copyright National Electrical Manufacturers Association
Provided by IHS under license with NEMA
No reproduction or networking permitted without license from IHS

Not for Resale

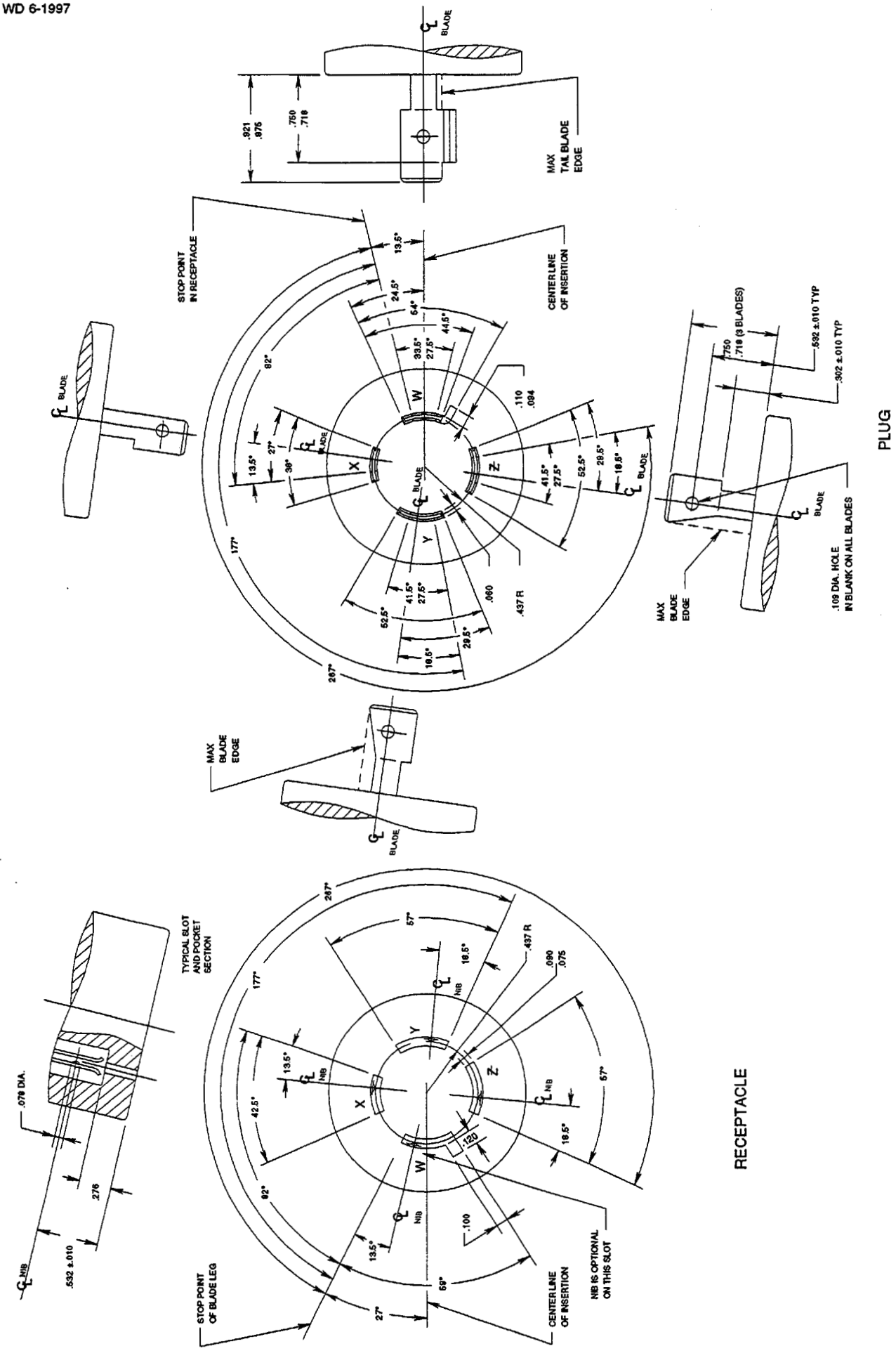

FIGURE L19-20
LOCKING TYPE PLUG AND RECEPTACLE
277/480 volts, 20 amperes, 3 phase Y, 4 pole, 4 wire

Copyright National Electrical Manufacturers Association
Provided by IHS under license with NEMA
No reproduction or networking permitted without license from IHS

Not for Resale

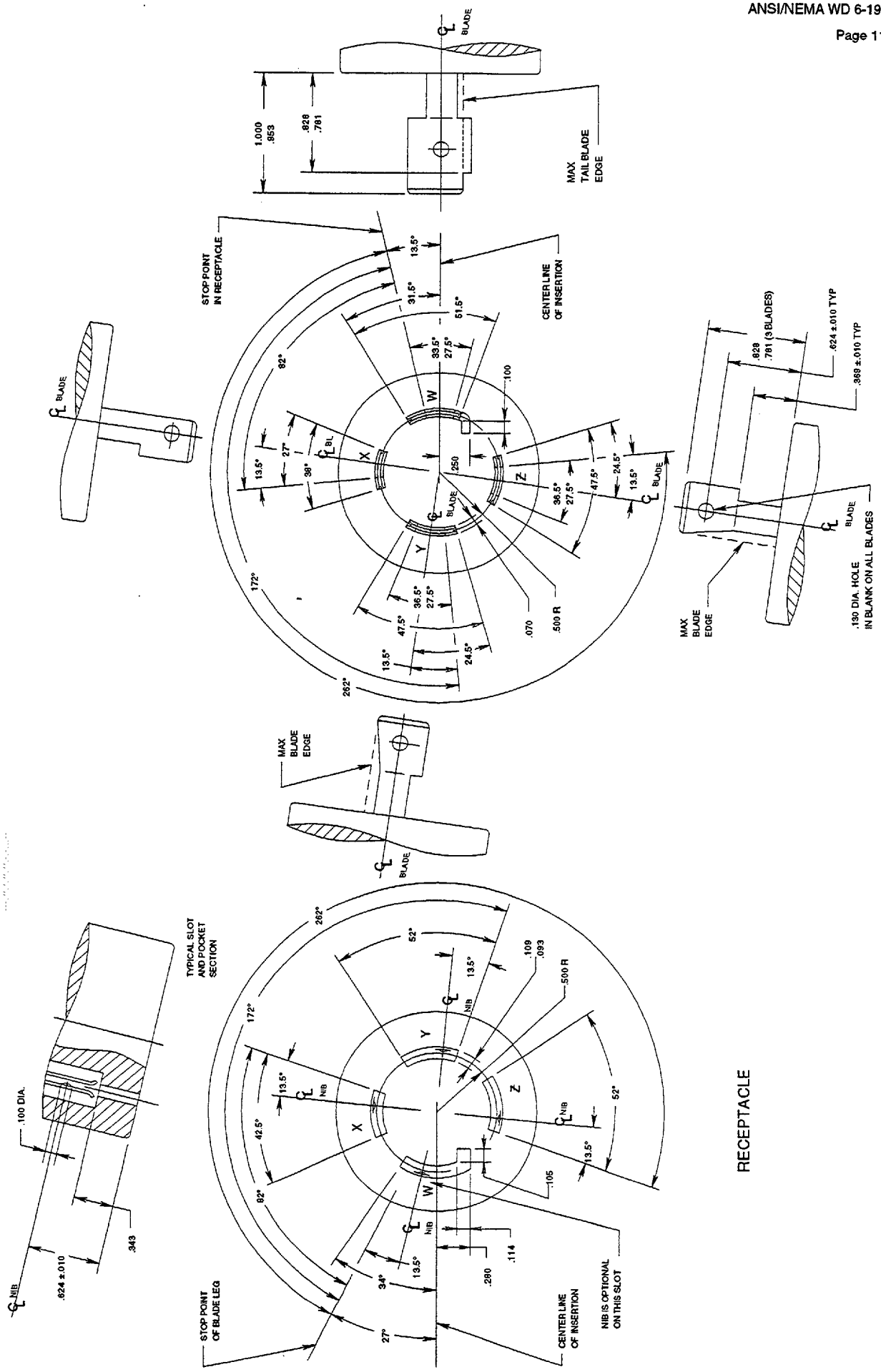

FIGURE L19-30
LOCKING TYPE PLUG AND RECEPTACLE
277/480 volts, 30 amperes, 3 phase Y, 4 pole, 4 wire

Copyright National Electrical Manufacturers Association
Provided by IHS under license with NEMA
No reproduction or networking permitted without license from IHS

Not for Resale

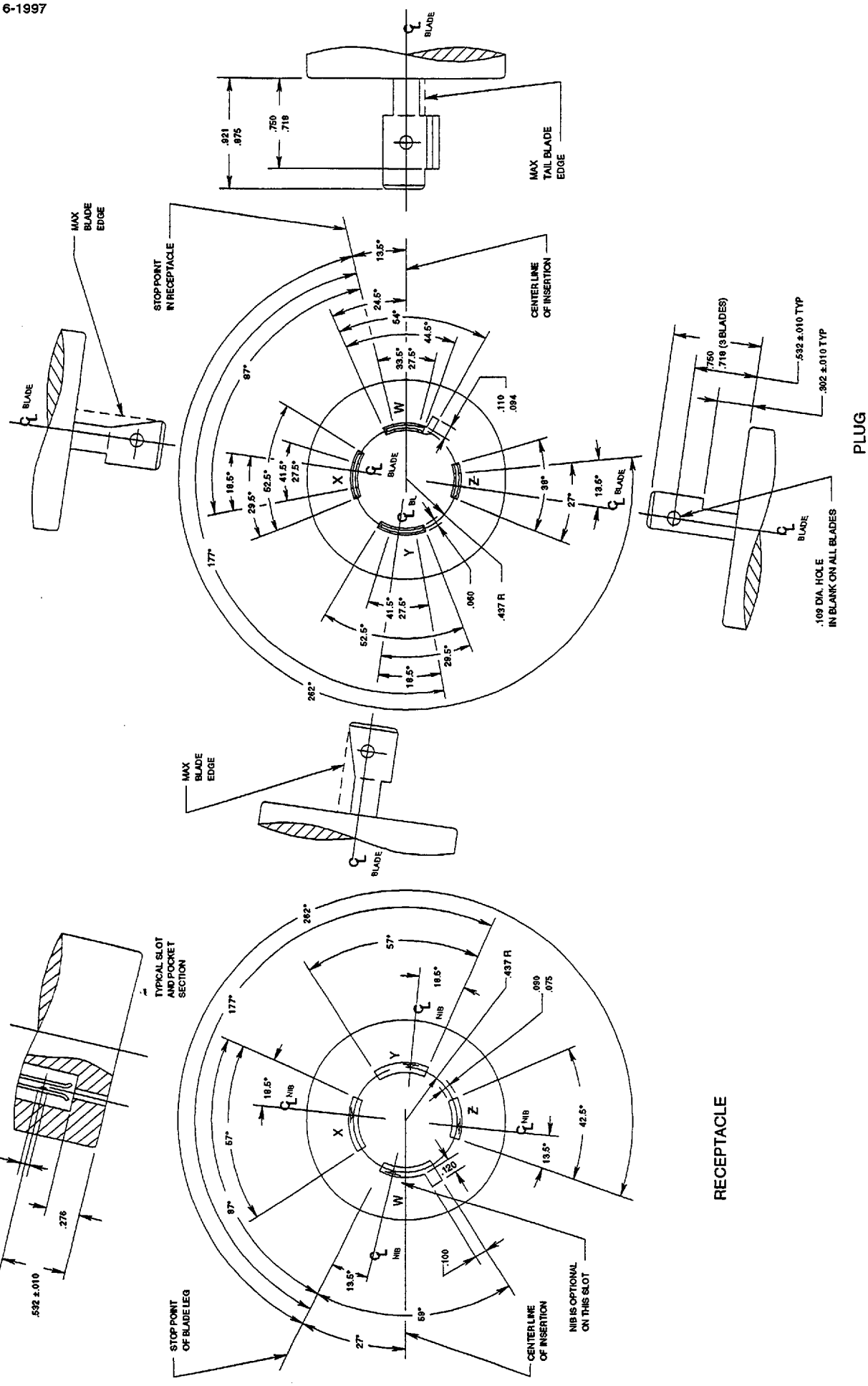

FIGURE L20-20
LOCKING TYPE PLUG AND RECEPTACLE
347/600 volts, 20 amperes, 3 phase Y, 4 pole, 4 wire

Copyright National Electrical Manufacturers Association
Provided by IHS under license with NEMA
No reproduction or networking permitted without license from IHS

Not for Resale

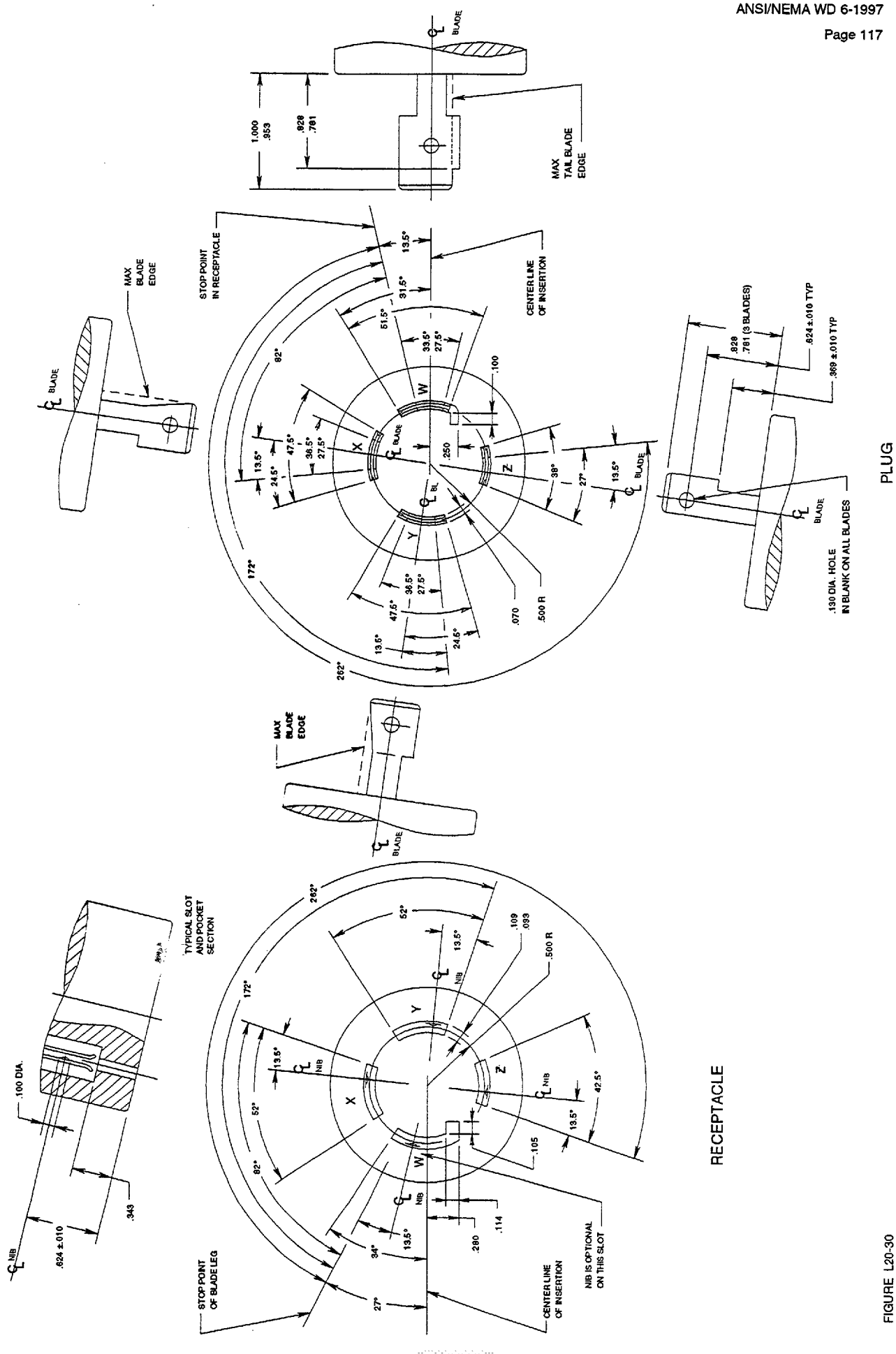

FIGURE L20-30
LOCKING TYPE PLUG AND RECEPTACLE
347/600 volts, 30 amperes, 3 phase Y, 4 pole, 4 wire

Copyright National Electrical Manufacturers Association
Provided by IHS under license with NEMA
No reproduction or networking permitted without license from IHS

Not for Resale

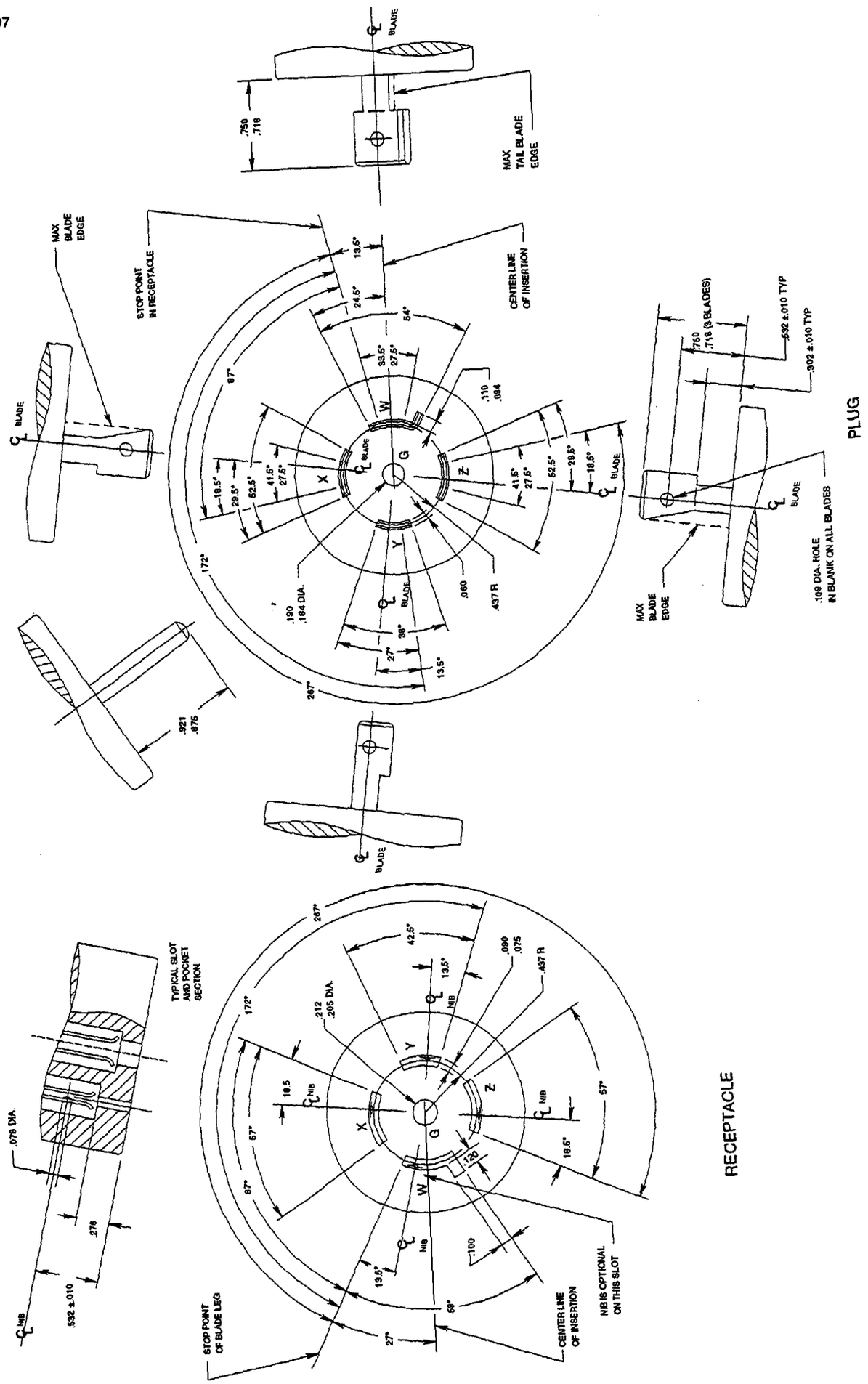

FIGURE L21-20
LOCKING TYPE PLUG AND RECEPTACLE
120/208 volts, 20 amperes, 3 phase Y, 4 pole, 5 wire, Grounding type

Copyright National Electrical Manufacturers Association
Provided by IHS under license with NEMA
No reproduction or networking permitted without license from IHS
Not for Resale

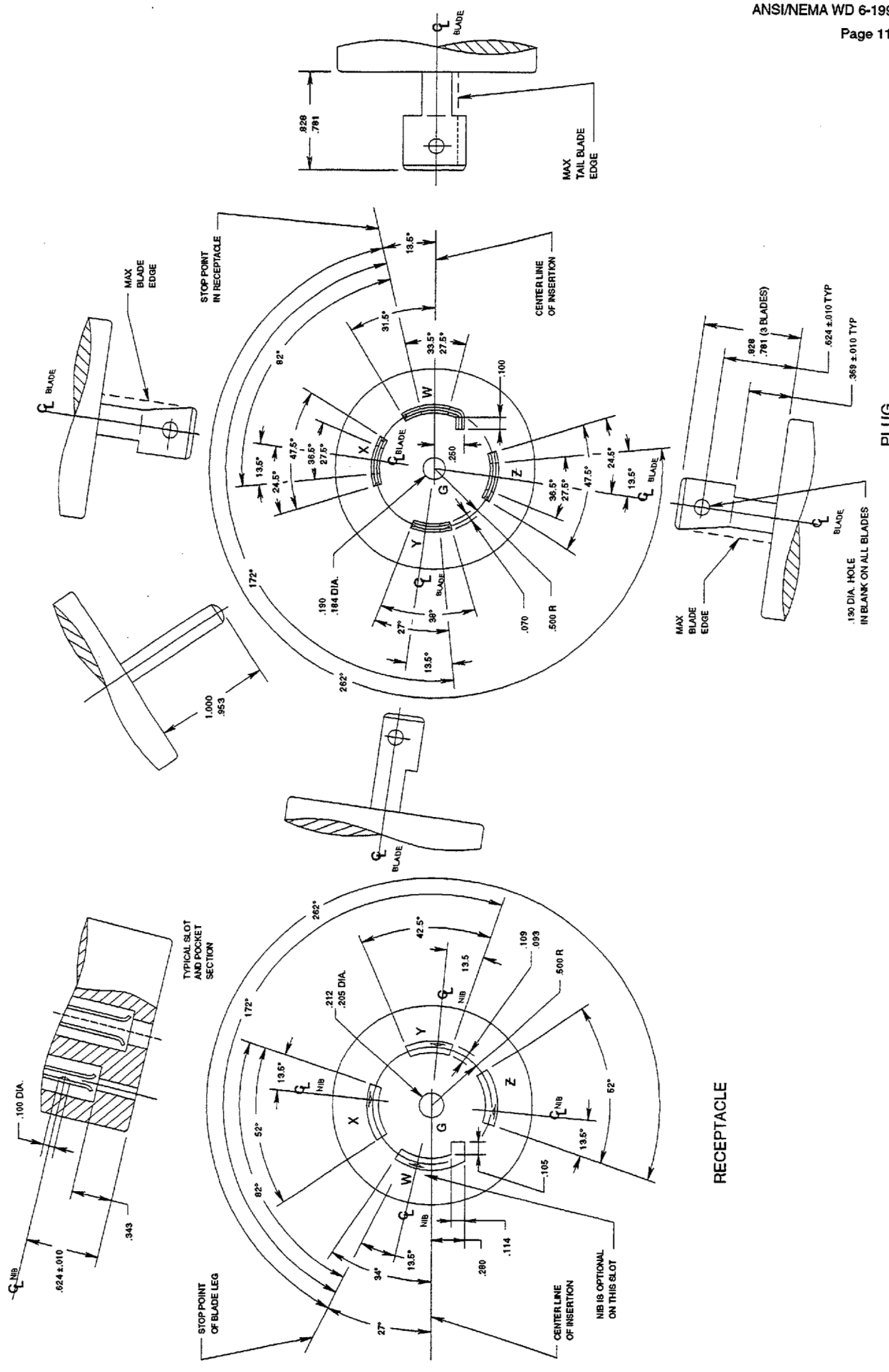

FIGURE L21-30
LOCKING TYPE PLUG AND RECEPTACLE
120/208 volts, 30 amperes, 3 phase Y, 4 pole, 5 wire, Grounding type

Copyright National Electrical Manufacturers Association
Provided by IHS under license with NEMA
No reproduction or networking permitted without license from IHS

Not for Resale

LOCKING TYPE PLUG AND RECEPTACLE

208 / 120 volts, 50 amperes, 3 Phase Y, 4 Pole, 5 Wire, Grounding type

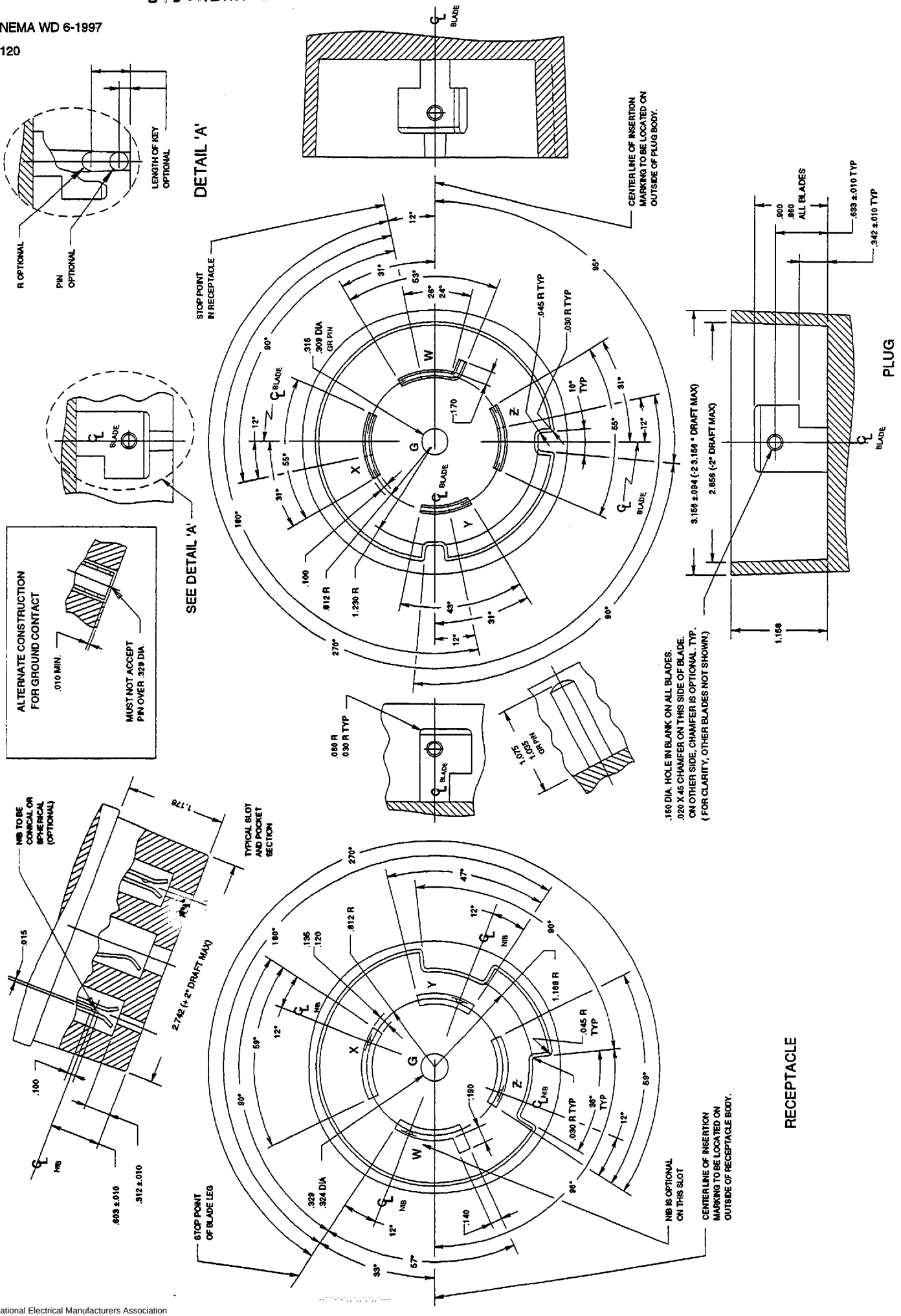

Copyright National Electrical Manufacturers Association
Provided by IHS under license with NEMA
No reproduction or networking permitted without license from IHS

Not for Resale

Copyright National Electrical Manufacturers Association
Provided by IHS under license with NEMA
No reproduction or networking permitted without license from IHS
Not for Resale

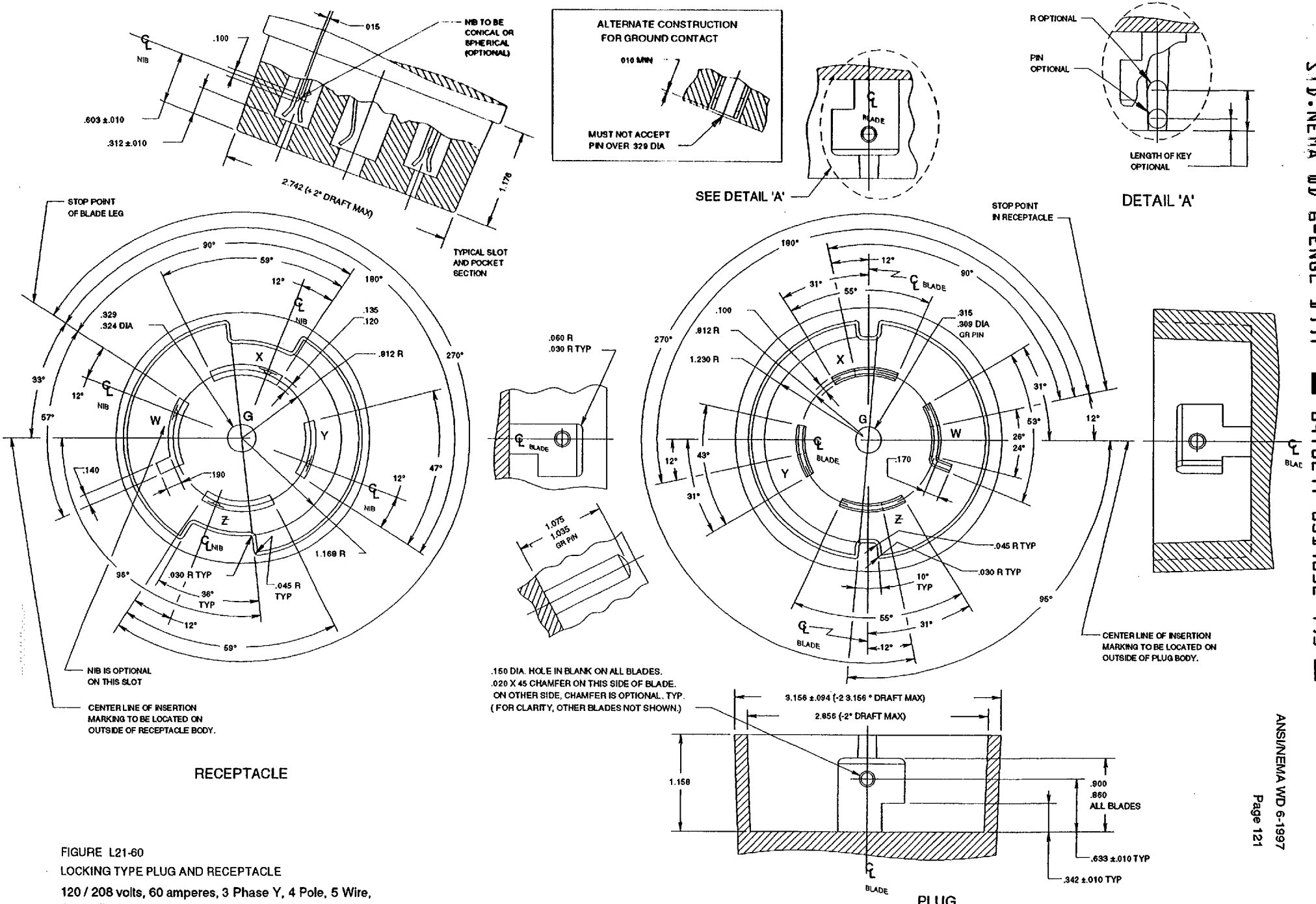

FIGURE L21-60

LOCKING TYPE PLUG AND RECEPTACLE

120 / 208 volts, 60 amperes, 3 Phase Y, 4 Pole, 5 Wire, Grounding Type

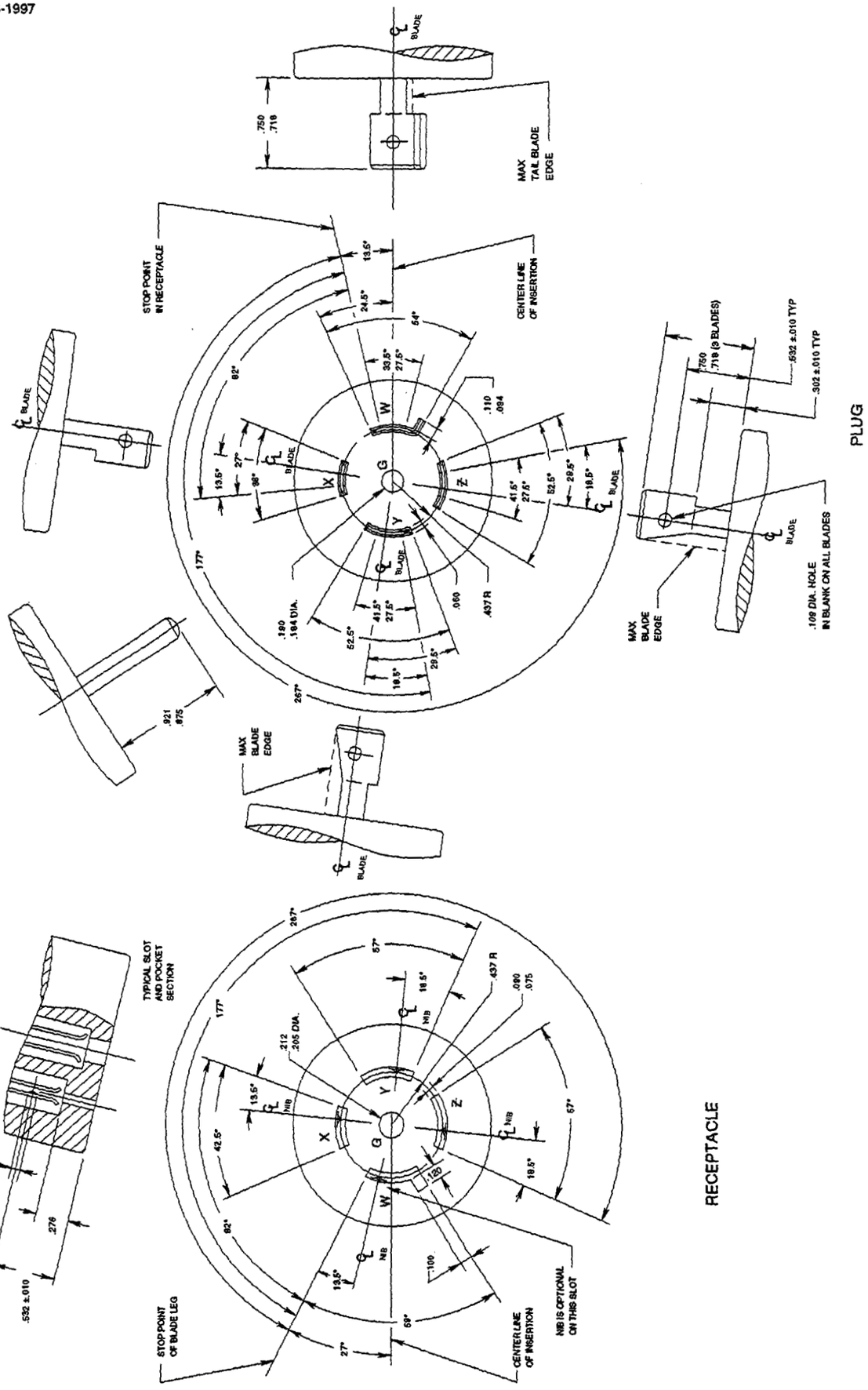

FIGURE L22-20
LOCKING TYPE PLUG AND RECEPTACLE
277/480 volts, 20 amperes, 3 phase Y, 4 pole, 5 wire, Grounding type

Copyright National Electrical Manufacturers Association
Provided by IHS under license with NEMA
No reproduction or networking permitted without license from IHS
Not for Resale

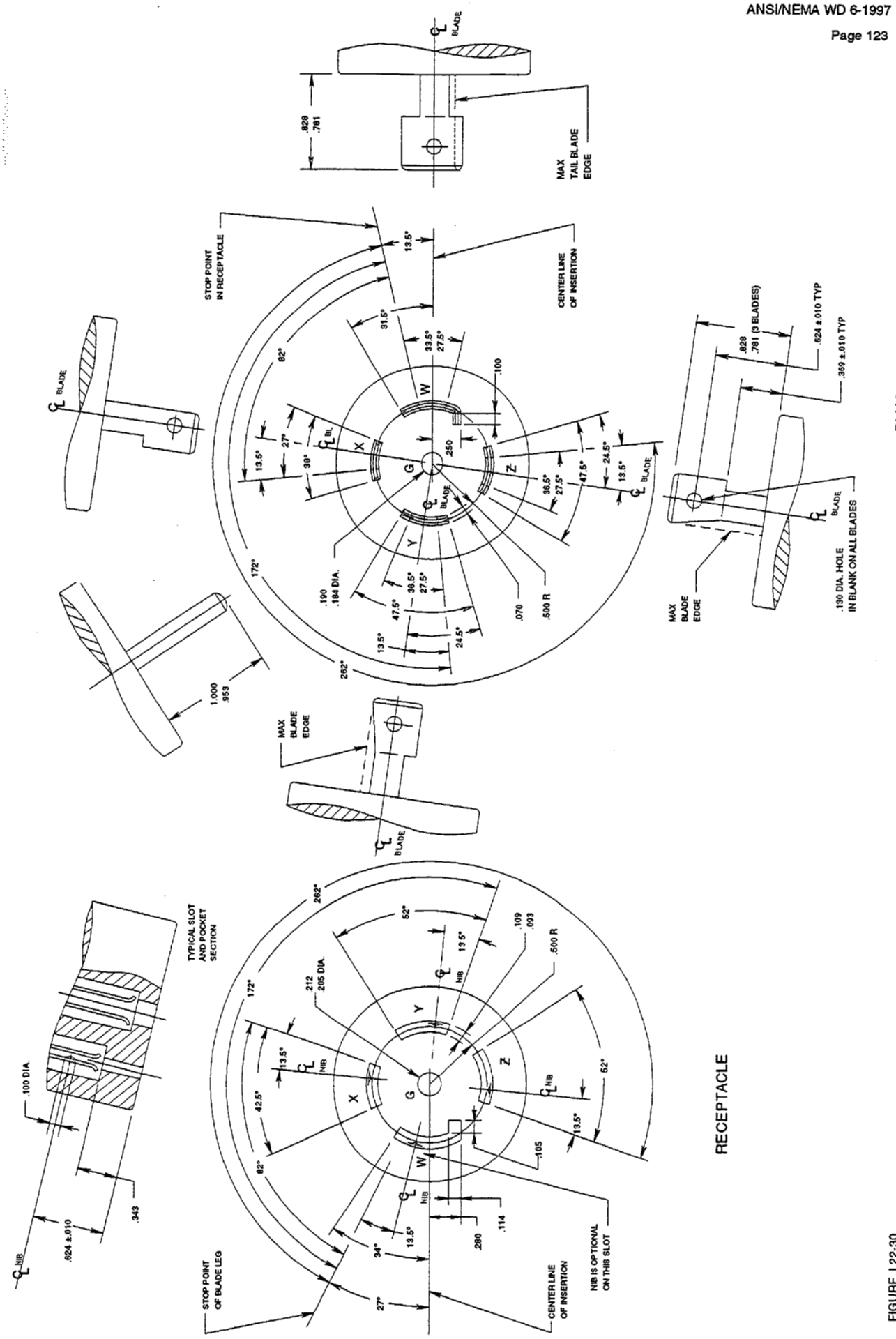

FIGURE L22-30

LOCKING TYPE PLUG AND RECEPTACLE

277/480 volts, 30 amperes, 3 phase Y, 4 pole, 5 wire, Grounding type

Copyright National Electrical Manufacturers Association
Provided by IHS under license with NEMA
No reproduction or networking permitted without license from IHS

Not for Resale

LOCKING TYPE PLUG AND RECEPTACLE

480 / 277 volts, 50 amperes, 3 Phase Y, 4 Pole, 5 Wire, Grounding Type

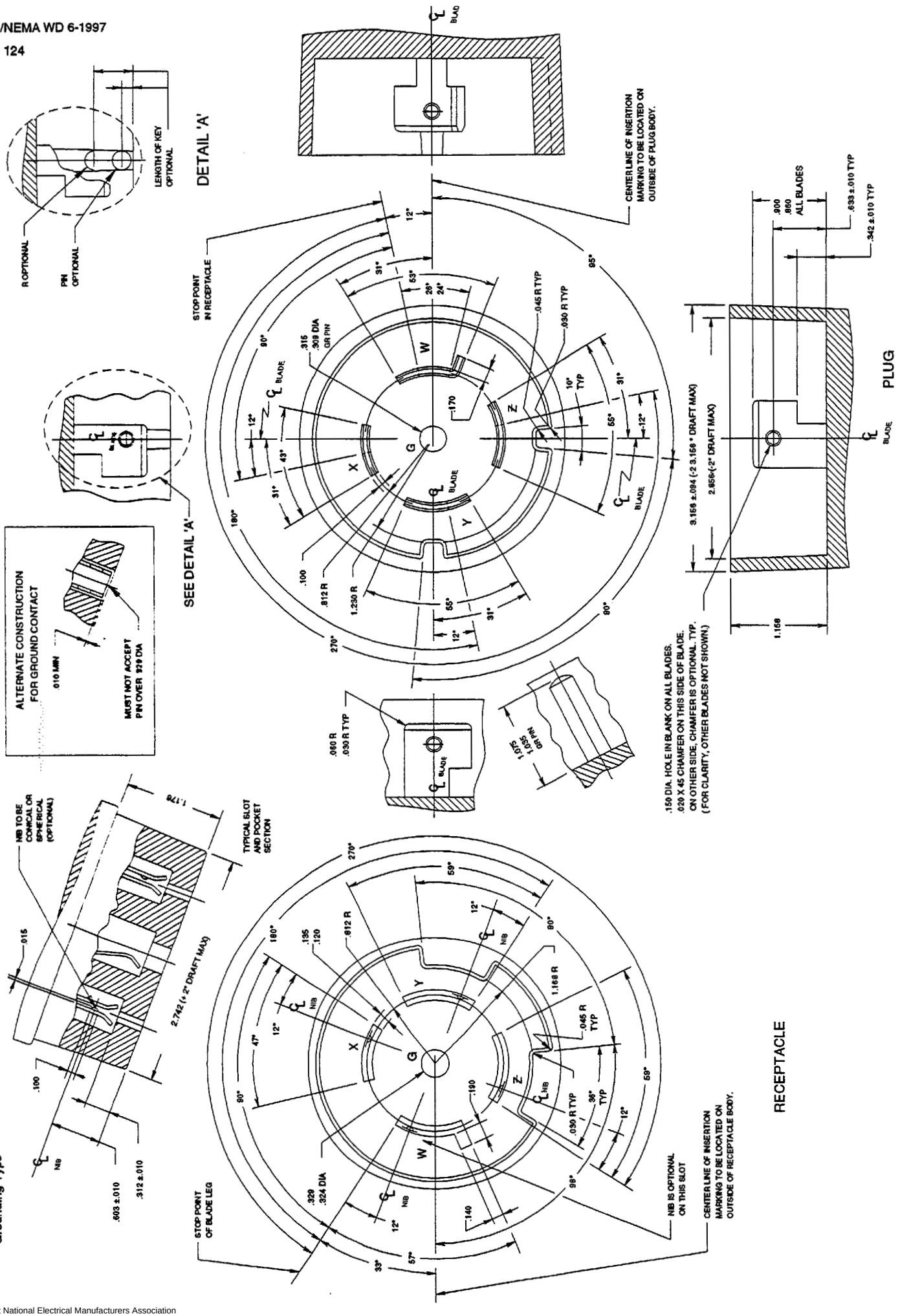

Copyright National Electrical Manufacturers Association
Provided by IHS under license with NEMA
No reproduction or networking permitted without license from IHS
Not for Resale

Copyright National Electrical Manufacturers Association
Provided by IHS under license with NEMA
No reproduction or networking permitted without license from IHS
Not for Resale

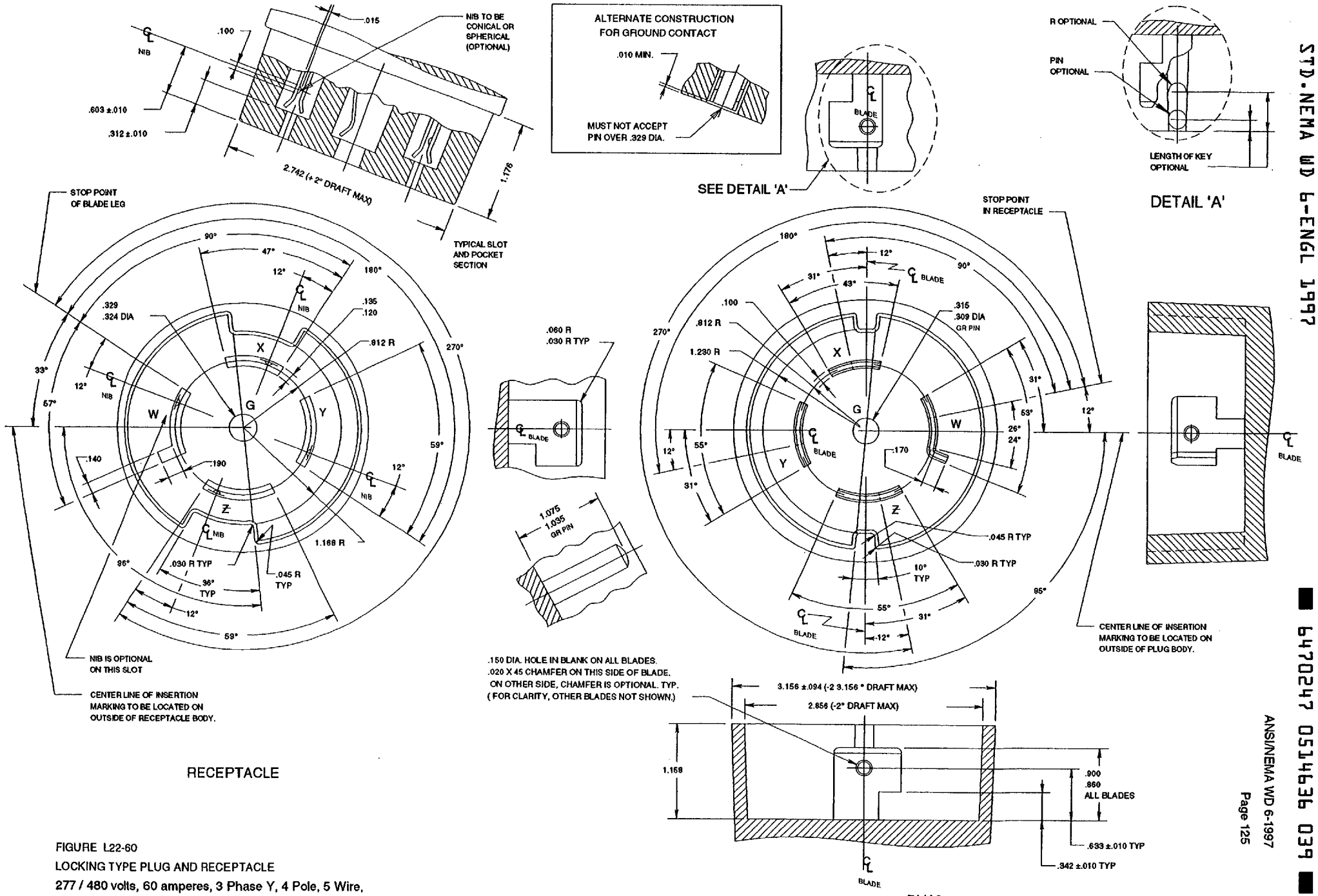

RECEPTACLE

PLUG

FIGURE L22-60
LOCKING TYPE PLUG AND RECEPTACLE
277 / 480 volts, 60 amperes, 3 Phase Y, 4 Pole, 5 Wire, Grounding Type

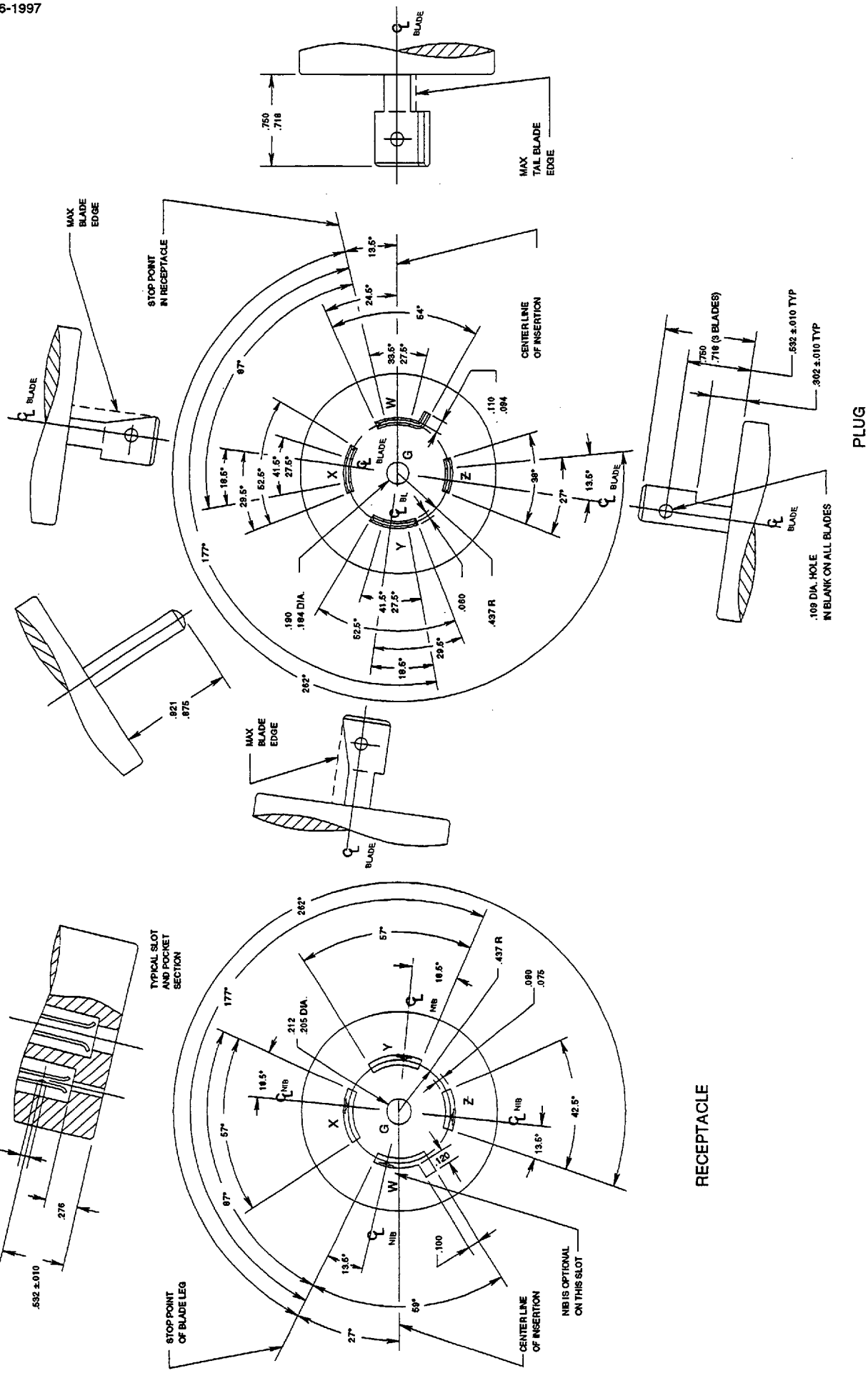

FIGURE L23-20
LOCKING TYPE PLUG AND RECEPTACLE
347/600 volts, 20 amperes, 3 phase Y, 4 pole, 5 wire, Grounding type

Copyright National Electrical Manufacturers Association
Provided by IHS under license with NEMA
No reproduction or networking permitted without license from IHS
Not for Resale

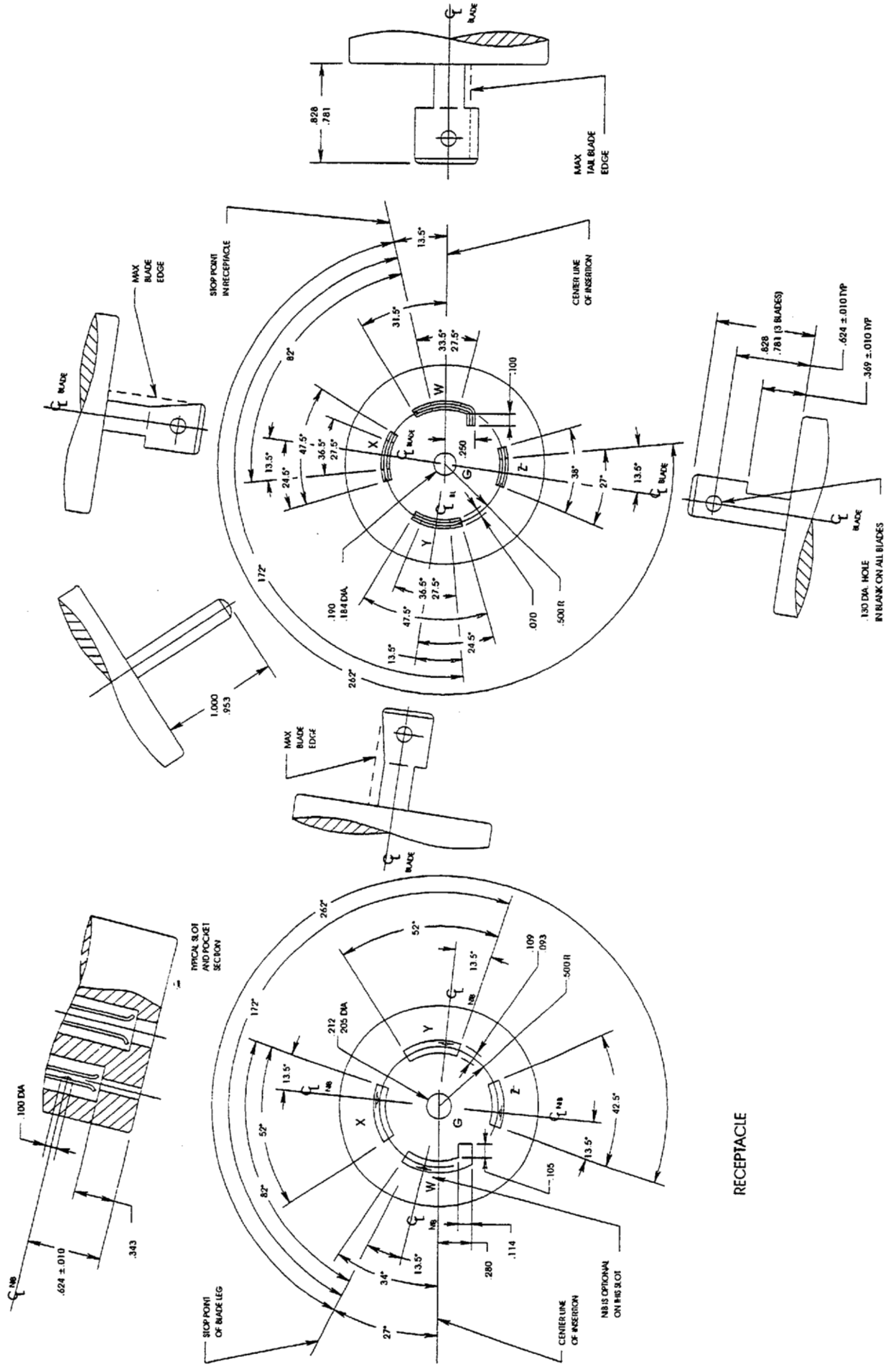

FIGURE L23-3D
LOCKING TYPE PLUG AND RECEPTACLE
347/600 volts, 30 amperes, 3 phase Y, 4 pole, 5 wire, Grounding type

Copyright National Electrical Manufacturers Association
Provided by IHS under license with NEMA
No reproduction or networking permitted without license from IHS

Not for Resale

Copyright National Electrical Manufacturers Association
Provided by IHS under license with NEMA
No reproduction or networking permitted without license from IHS
Not for Resale

LOCKING TYPE PLUG AND RECEPTACLE

600 / 347 volts, 50 amperes, 3 Phase Y, 4 Pole, 5 Wire, Grounding type

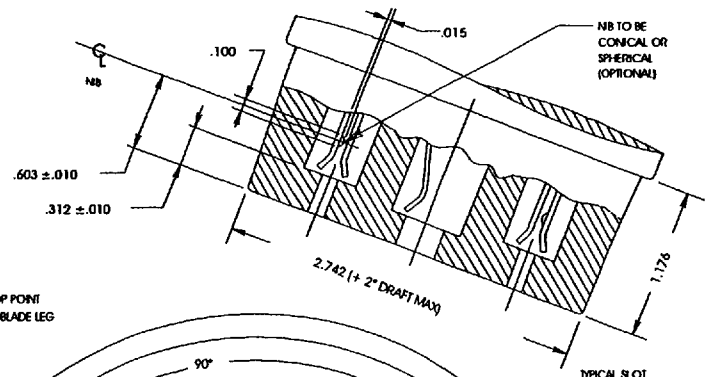

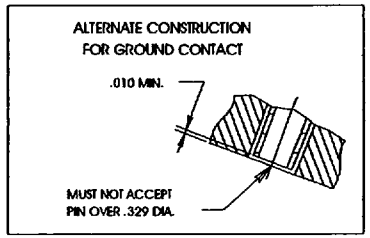

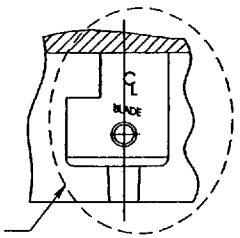

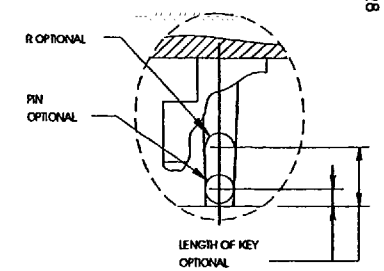

DETAIL 'A'

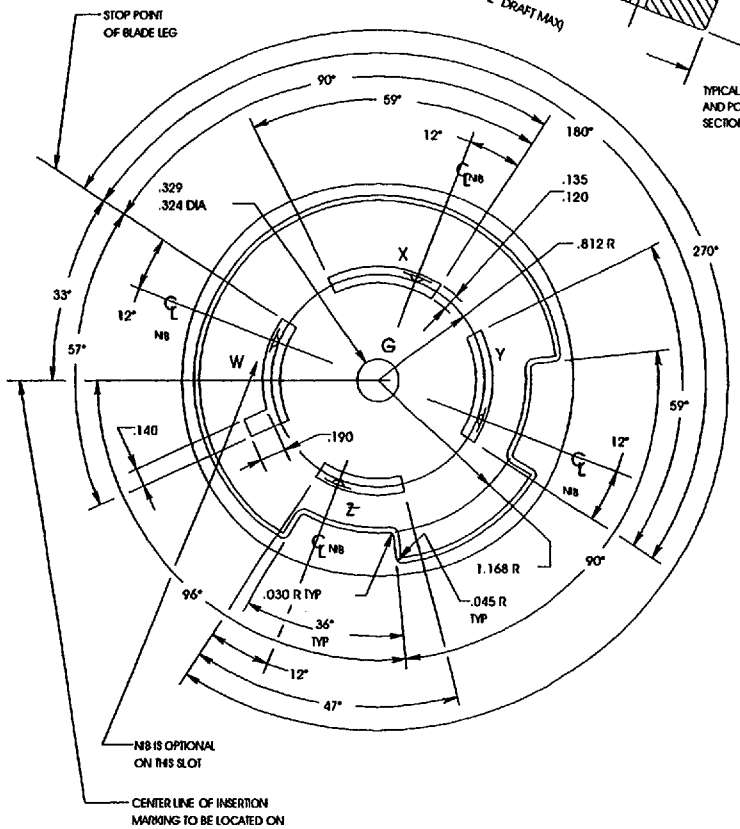

RECEPTACLE

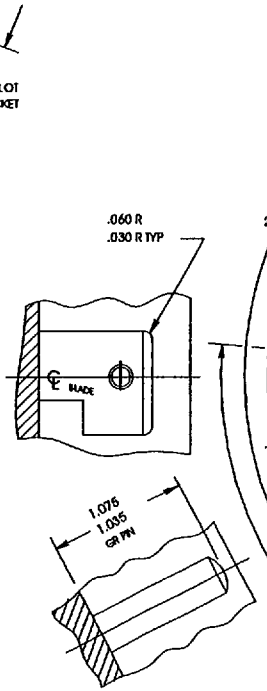

.150 DIA. HOLE IN BLANK ON ALL BLADES.
.020 X 45 CHAMFER ON THIS SIDE OF BLADE.
ON OTHER SIDE, CHAMFER IS OPTIONAL. TYP.
(FOR CLARITY, OTHER BLADES NOT SHOWN.)

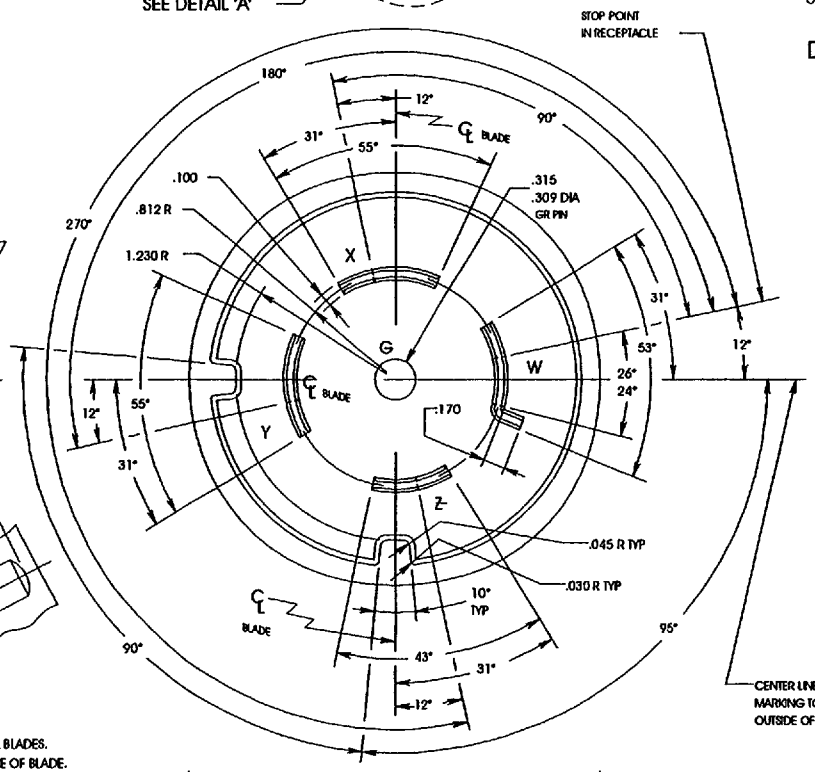

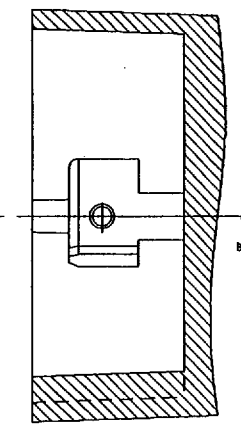

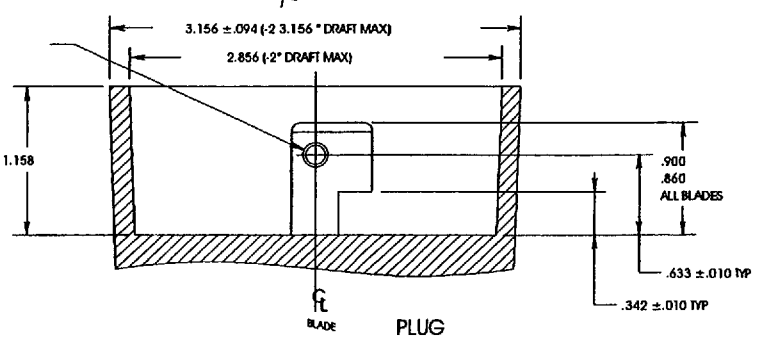

PLUG

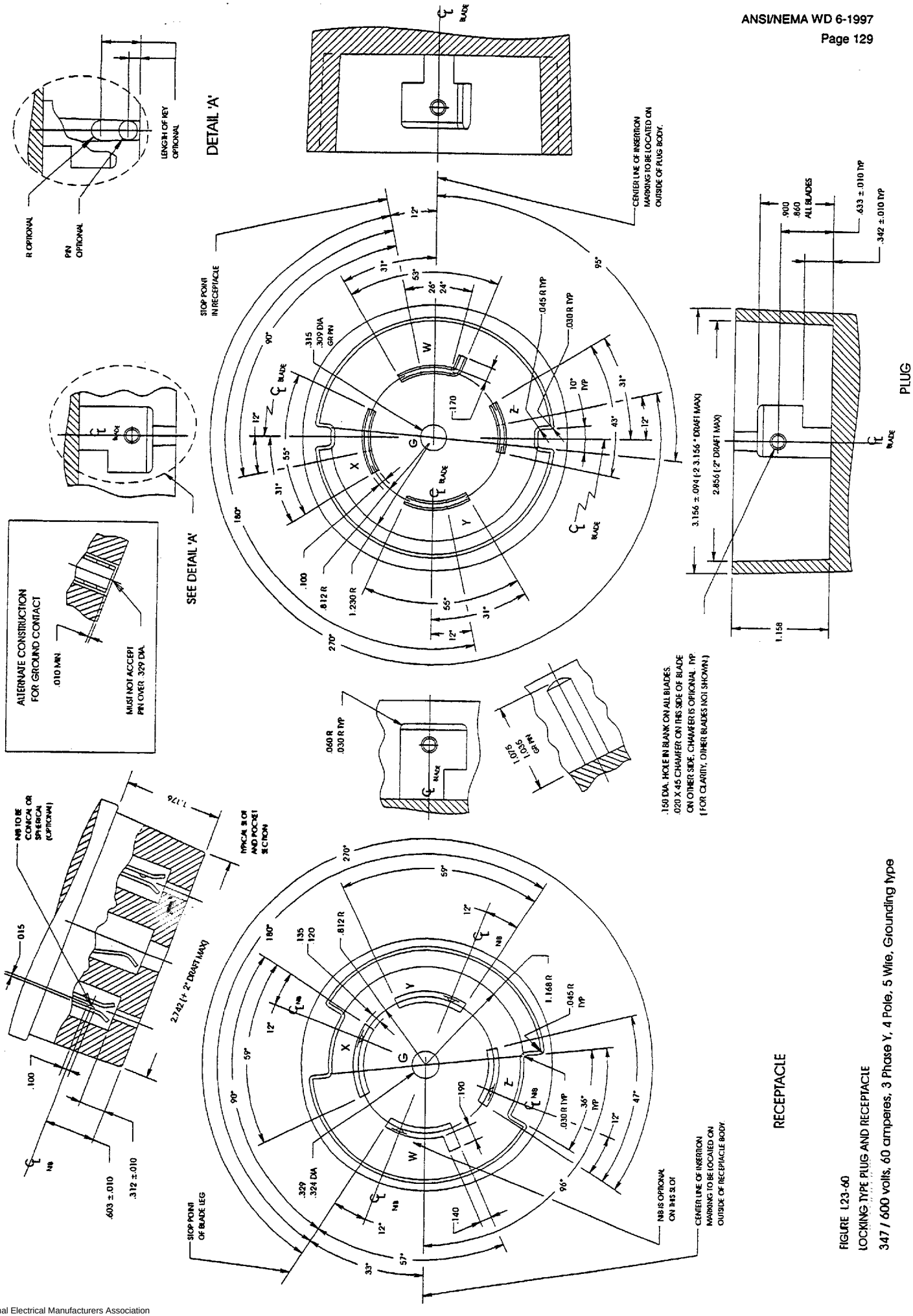

FIGURE L23-60
LOCKING TYPE PLUG AND RECEPTACLE
347 / 600 volts, 60 amperes, 3 Phase Y, 4 Pole, 5 Wire, Grounding Type

Copyright National Electrical Manufacturers Association
Provided by IHS under license with NEMA
No reproduction or networking permitted without license from IHS

Not for Resale

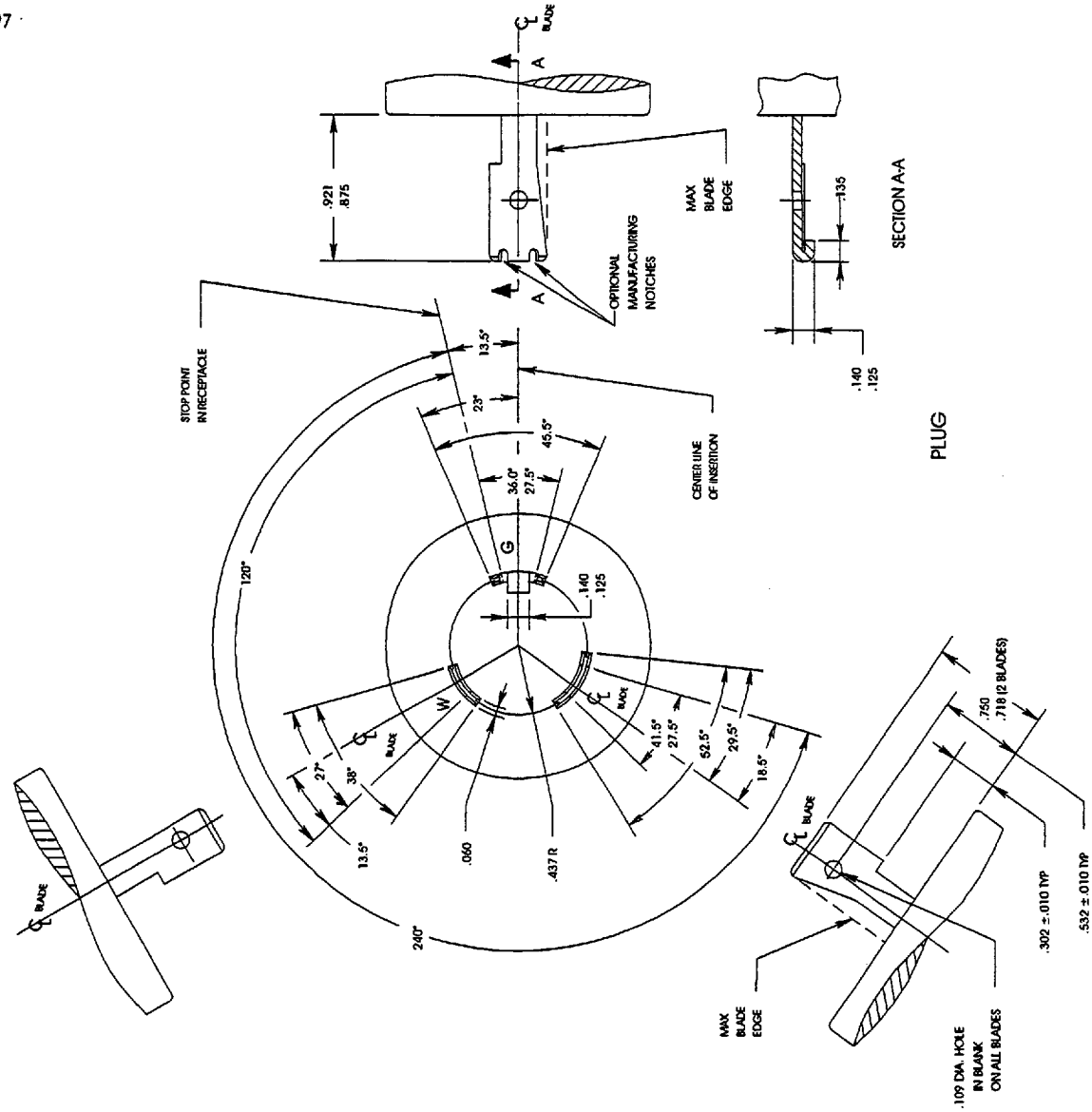

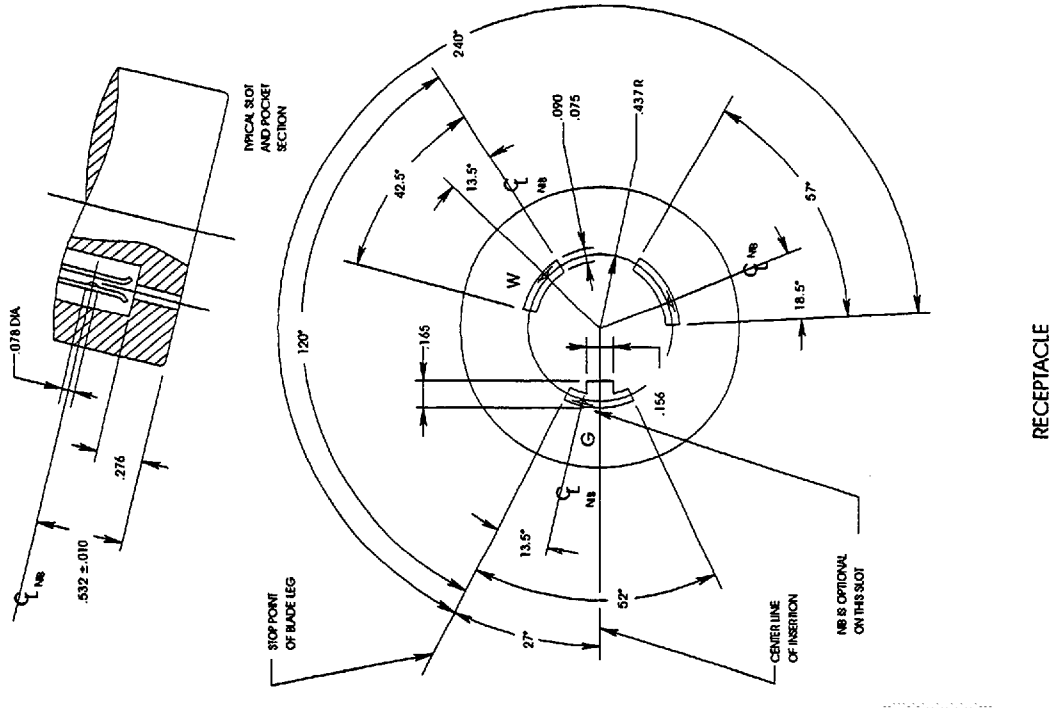

FIGURE L24-20
LOCKING TYPE PLUG AND RECEPTACLE
347 volts, 20 amperes, 2 pole, 3 wire, Grounding type

Copyright National Electrical Manufacturers Association
Provided by IHS under license with NEMA
No reproduction or networking permitted without license from IHS

Not for Resale

Copyright National Electrical Manufacturers Association
Provided by IHS under license with NEMA
No reproduction or networking permitted without license from IHS
Not for Resale

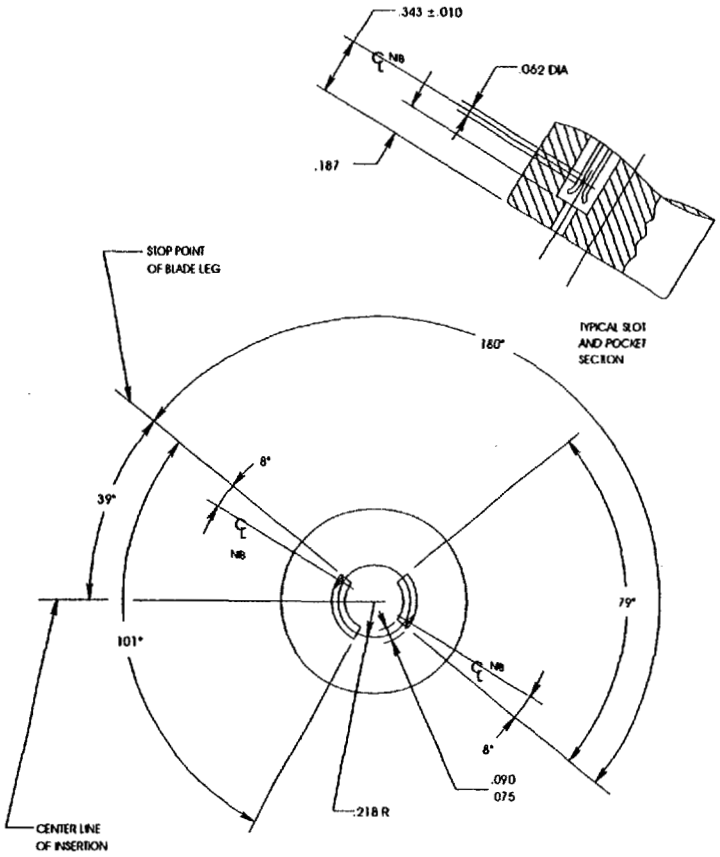

RECEPTACLE

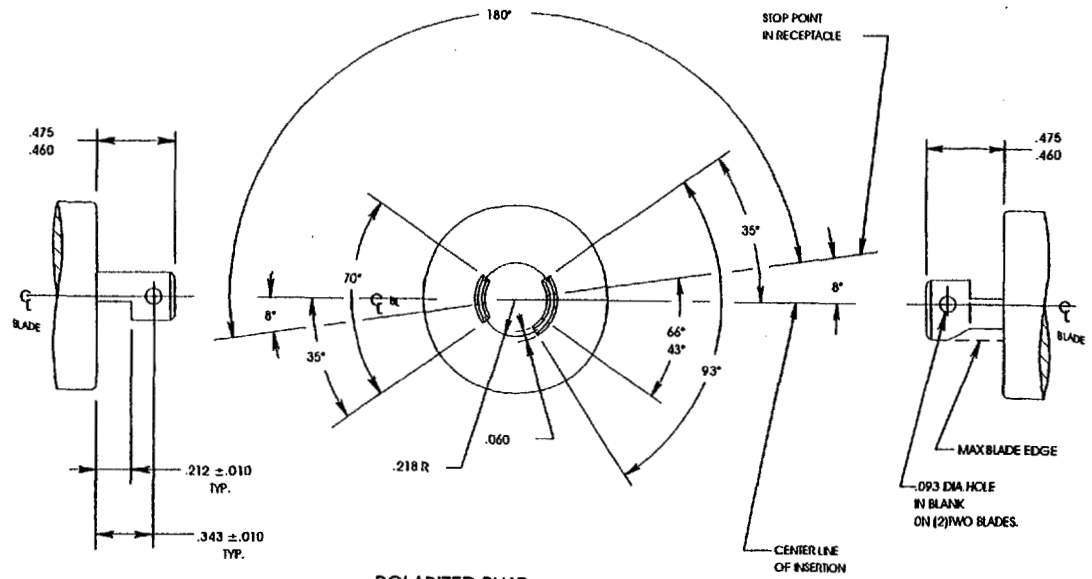

POLARIZED PLUG

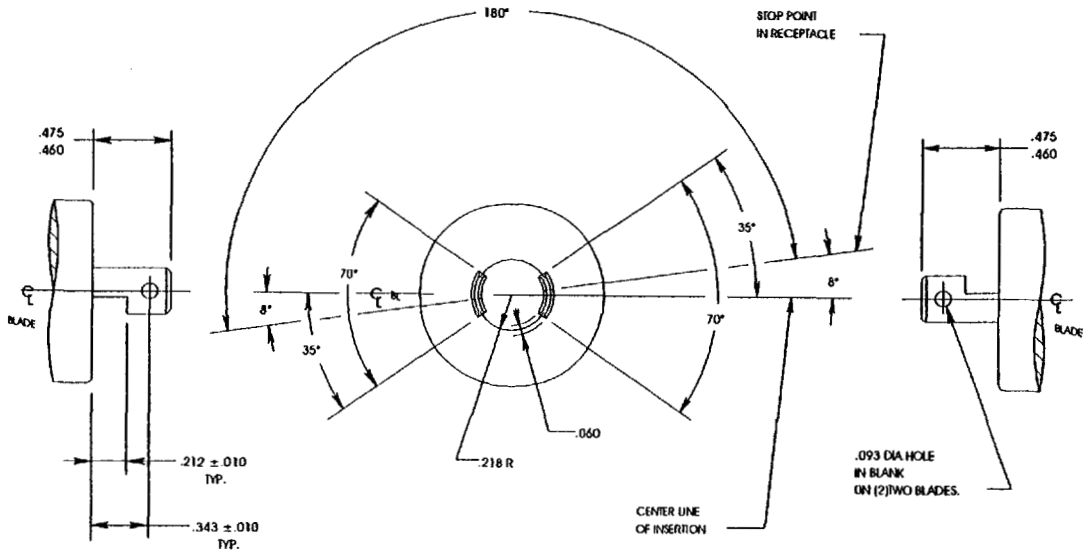

NON-POLARIZED PLUG

FIGURE ML-1
MIDGET LOCKING TYPE PLUG AND RECEPTACLE
125 volts, 15 amperes, 2 pole, 2 wire

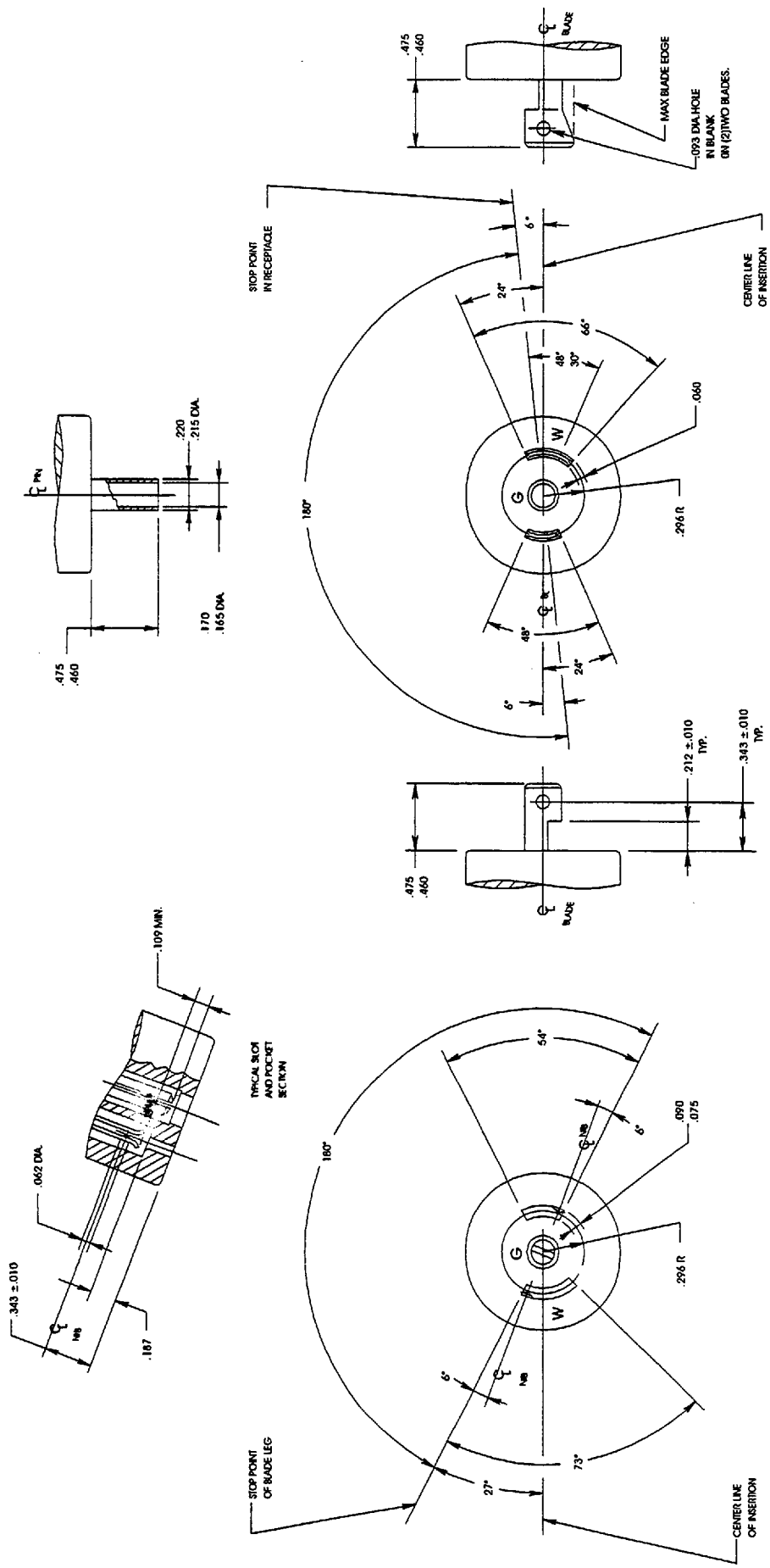

FIGURE ML-2
MIDGET LOCKING TYPE PLUG AND RECEPTACLE
125 volts, 15 amperes, 2 pole, 3 wire, Grounding type

Copyright National Electrical Manufacturers Association
Provided by IHS under license with NEMA
No reproduction or networking permitted without license from IHS

Not for Resale

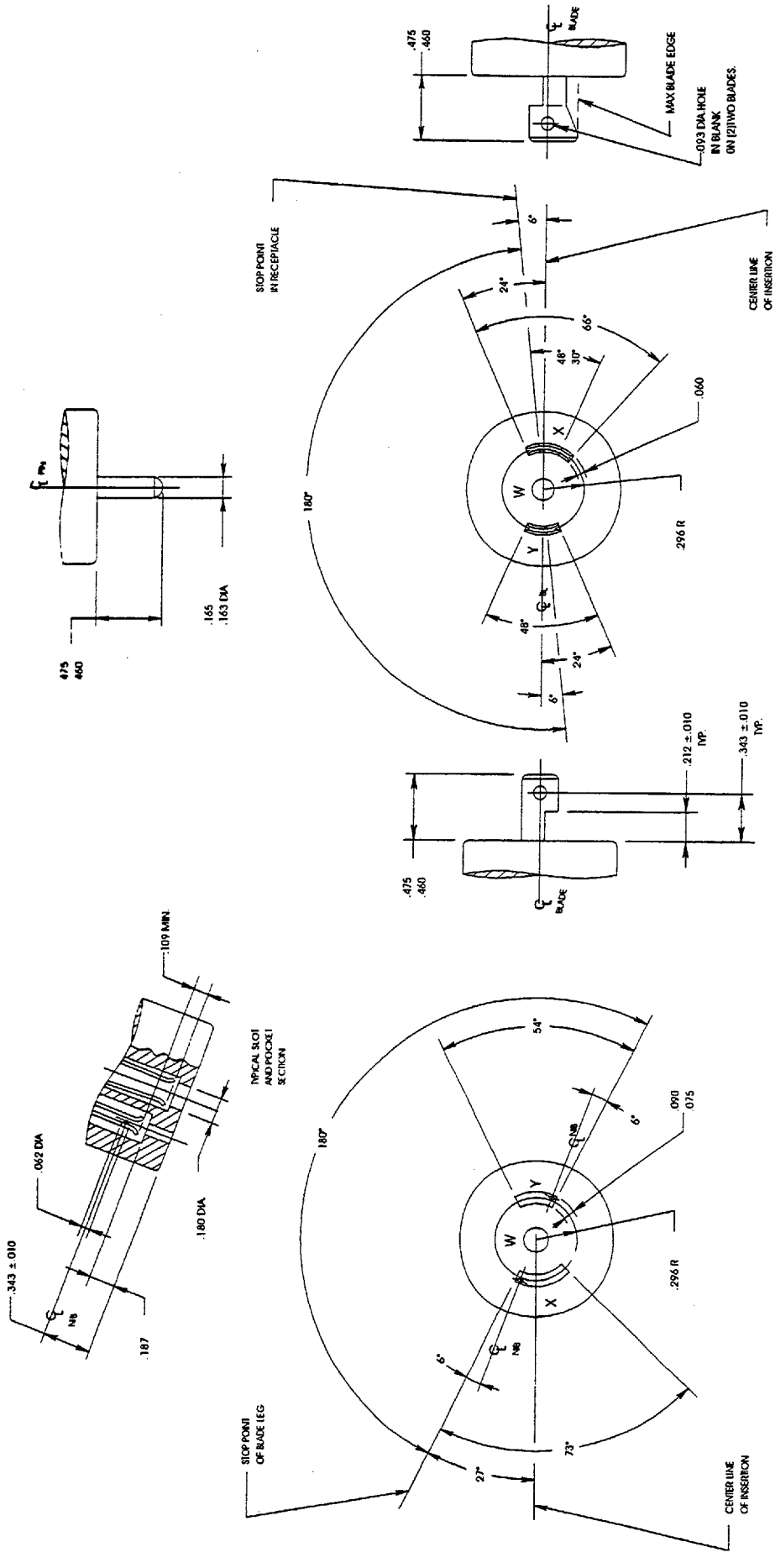

FIGURE ML-3
MIDGET LOCKING TYPE PLUG AND RECEPTACLE
125/250 volts, 15 amperes, 3 pole, 3 wire

Copyright National Electrical Manufacturers Association
Provided by IHS under license with NEMA
No reproduction or networking permitted without license from IHS

Not for Resale

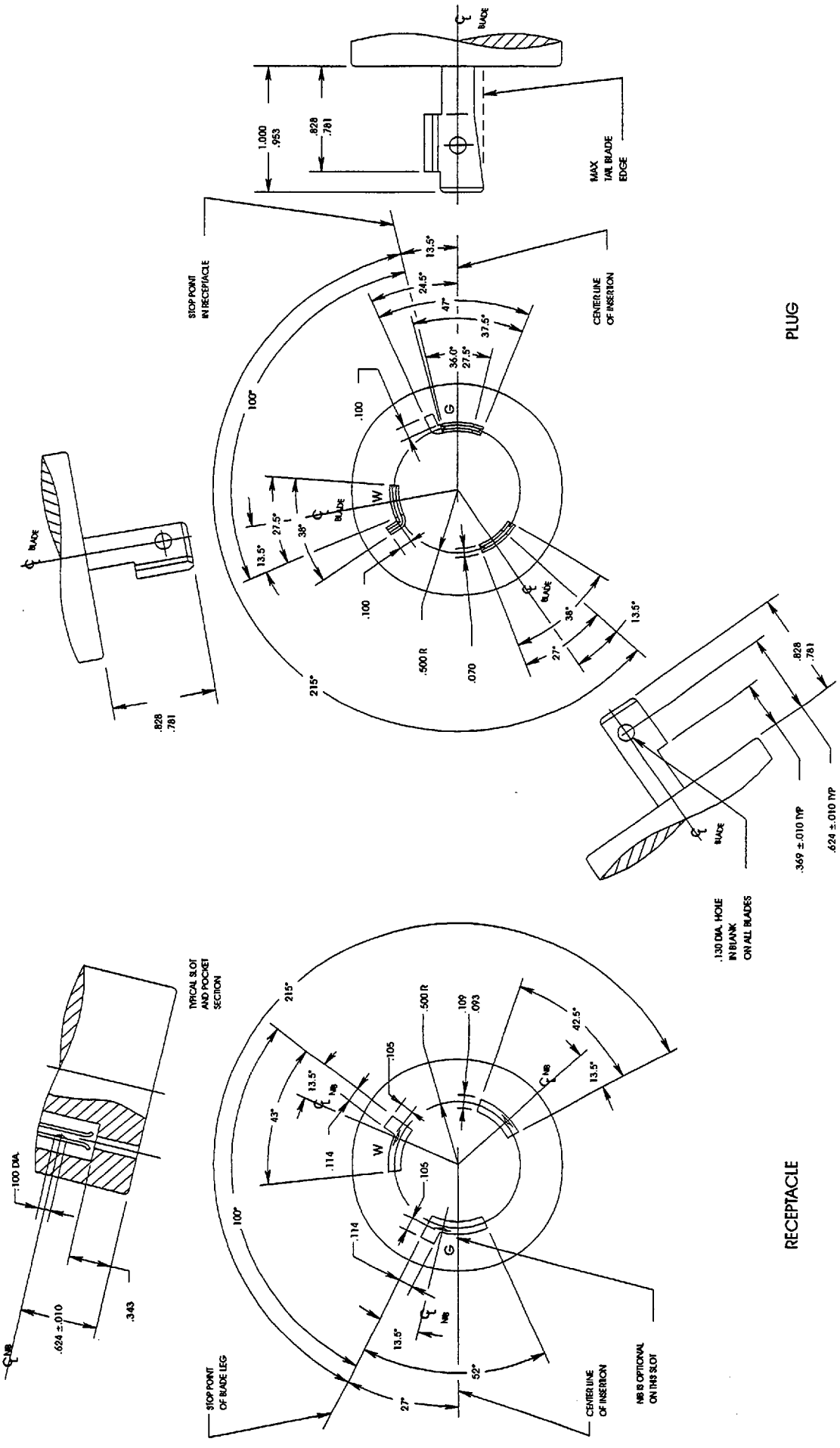

FIGURE FSL 1
LOCKING TYPE PLUG AND RECEPTACLE
28 volts DC, 30 amperes, 2 pole, 3 wire, Grounding type

Copyright National Electrical Manufacturers Association
Provided by IHS under license with NEMA
No reproduction or networking permitted without license from IHS

Not for Resale

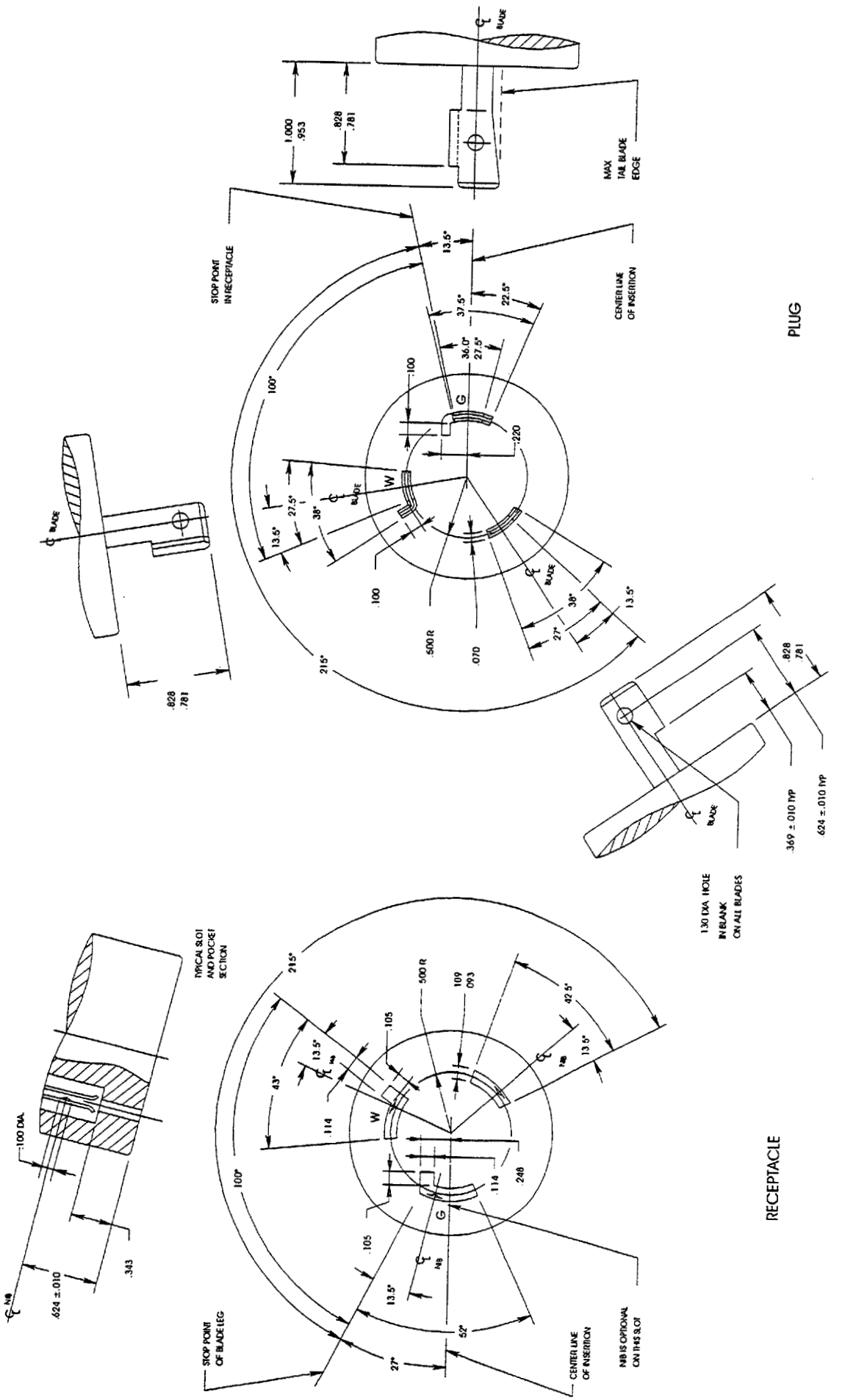

FIGURE FSL 2
LOCKING TYPE PLUG AND RECEPTACLE
120 volts, 30 amperes, 400 Hz, 2 pole, 3 wire, Grounding type

Copyright National Electrical Manufacturers Association
Provided by IHS under license with NEMA
No reproduction or networking permitted without license from IHS

Not for Resale

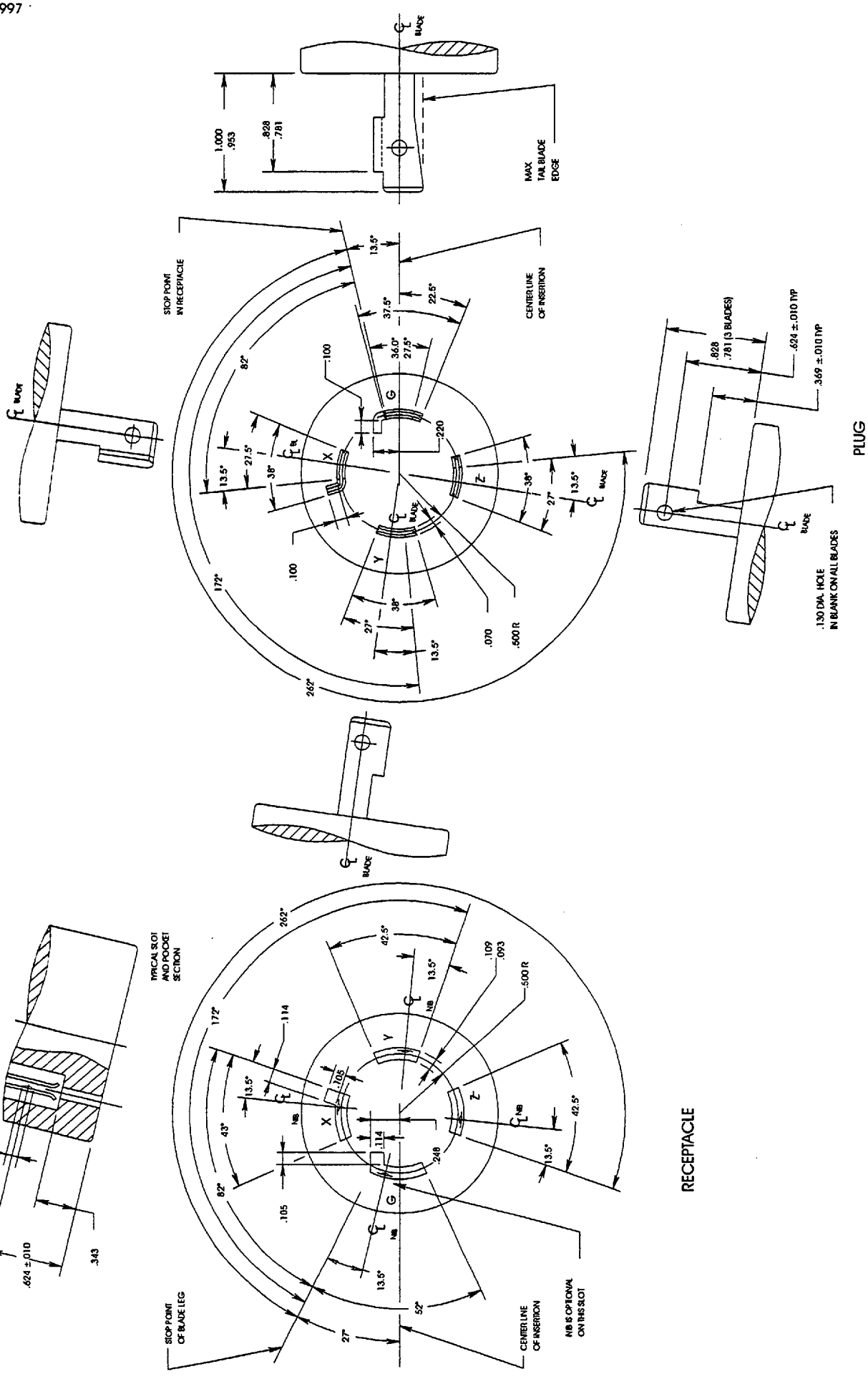

FIGURE FSL 3
LOCKING TYPE PLUG AND RECEPTACLE
120 volts, 30 amperes, 400 HZ, 3 phase, 3 pole, 4 wire, Grounding type

Copyright National Electrical Manufacturers Association
Provided by IHS under license with NEMA
No reproduction or networking permitted without license from IHS

Not for Resale

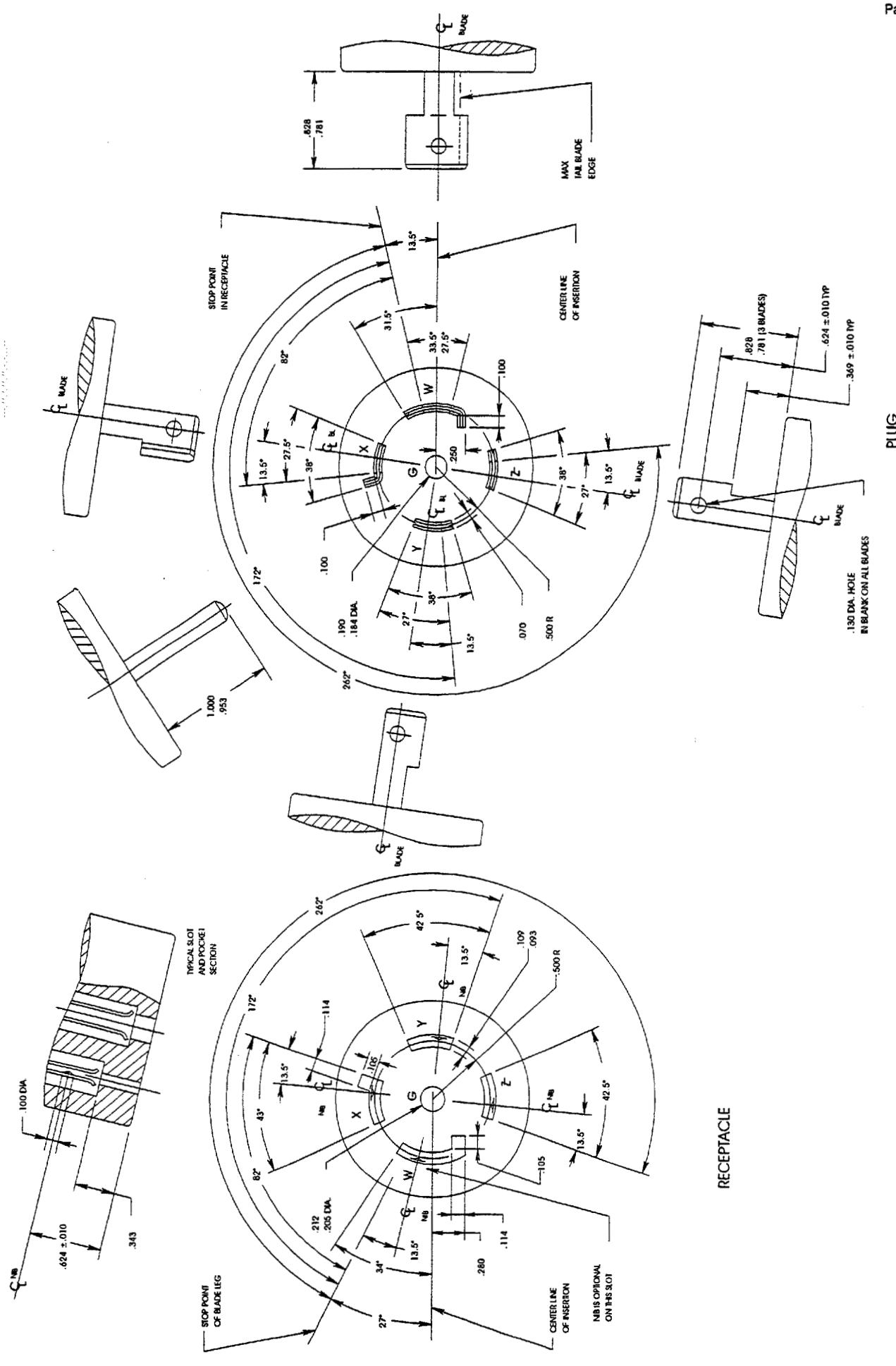

FIGURE FSL 4
LOCKING TYPE PLUG AND RECEPTACLE
120/208 volts, 30 amperes, 3 phase Y, 400 HZ, 4 pole, 5 wire, Grounding type

Copyright National Electrical Manufacturers Association
Provided by IHS under license with NEMA
No reproduction or networking permitted without license from IHS

Not for Resale

Copyright National Electrical Manufacturers Association
Provided by IHS under license with NEMA
No reproduction or networking permitted without license from IHS
Not for Resale

FIGURE 3S1 - 3S1

LOCKING TYPE PLUG AND RECEPTACLE
MARINE SHIP-TO-SHORE USE FOR SMALL CRAFTS
125 Volts AC, 50 amperes, 2 pole, 3 wire, Grounding type

NOTES:

1- ON RECEPTACLE, THE SECONDARY GROUNDING CONTACT (TO SS-1P SHROUD) SHALL BE BONDED TO GROUNDING TERMINAL. THE SECONDARY GROUNDING CONTACT MAY BE A PORTION OF A METALLIC CIRCUMFERENTIAL SHELL. THE SECONDARY GROUNDING CONTACT IS AN OPTIONAL REDUNDANT GROUNDING PATH TO THE GROUNDING BLADE.
2- ON PLUG, SPRING CONTACT SHALL BONDED TO METALLIC SHROUD AND CONNECTED TO GROUNDING TERMINAL.
3- ON PLUG, KEYWAYS MAY BE FORMED AS SHOWN, OR MAY BE FULLY OPENED.
4- ON RECEPTACLE, THE END OF THE CIRCUMFERENTIAL PORTION OF THE KEYWAY IS 35° MIN. FROM KEYWAY CENTERLINE.

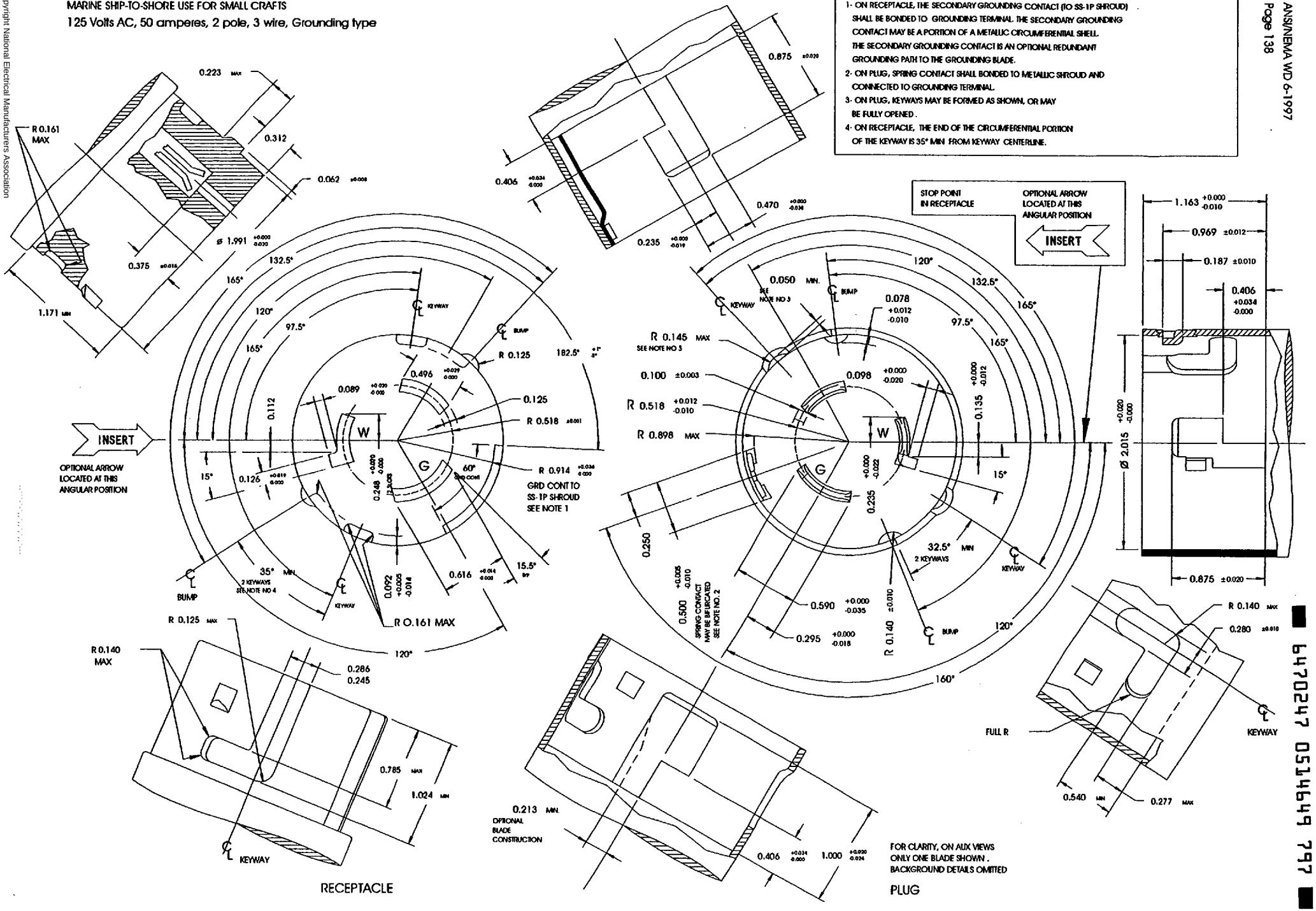

RECEPTACLE

PLUG

Copyright National Electrical Manufacturers Association
Provided by IHS under license with NEMA
No reproduction or networking permitted without license from IHS
Not for Resale

NOTES:

1. ON RECEPTACLE, GROUNDING CONTACT (TO SS-2P SHROUD) SHALL BE BONDED TO GROUNDING TERMINAL. GROUNDING CONTACT MAY BE A PORTION OF A METALLIC CIRCUMFERENTIAL SHELL.
2. ON PLUG, SPRING CONTACT SHALL BONDED TO METALLIC SHROUD AND CONNECTED TO GROUNDING TERMINAL.
3. ON PLUG, KEYWAYS MAY BE FORMED AS SHOWN, OR MAY BE FULLY OPENED.
4. ON RECEPTACLE, THE END OF THE CIRCUMFERENTIAL PORTION OF THE KEYWAY IS 35° MIN FROM KEYWAY CENTERLINE.

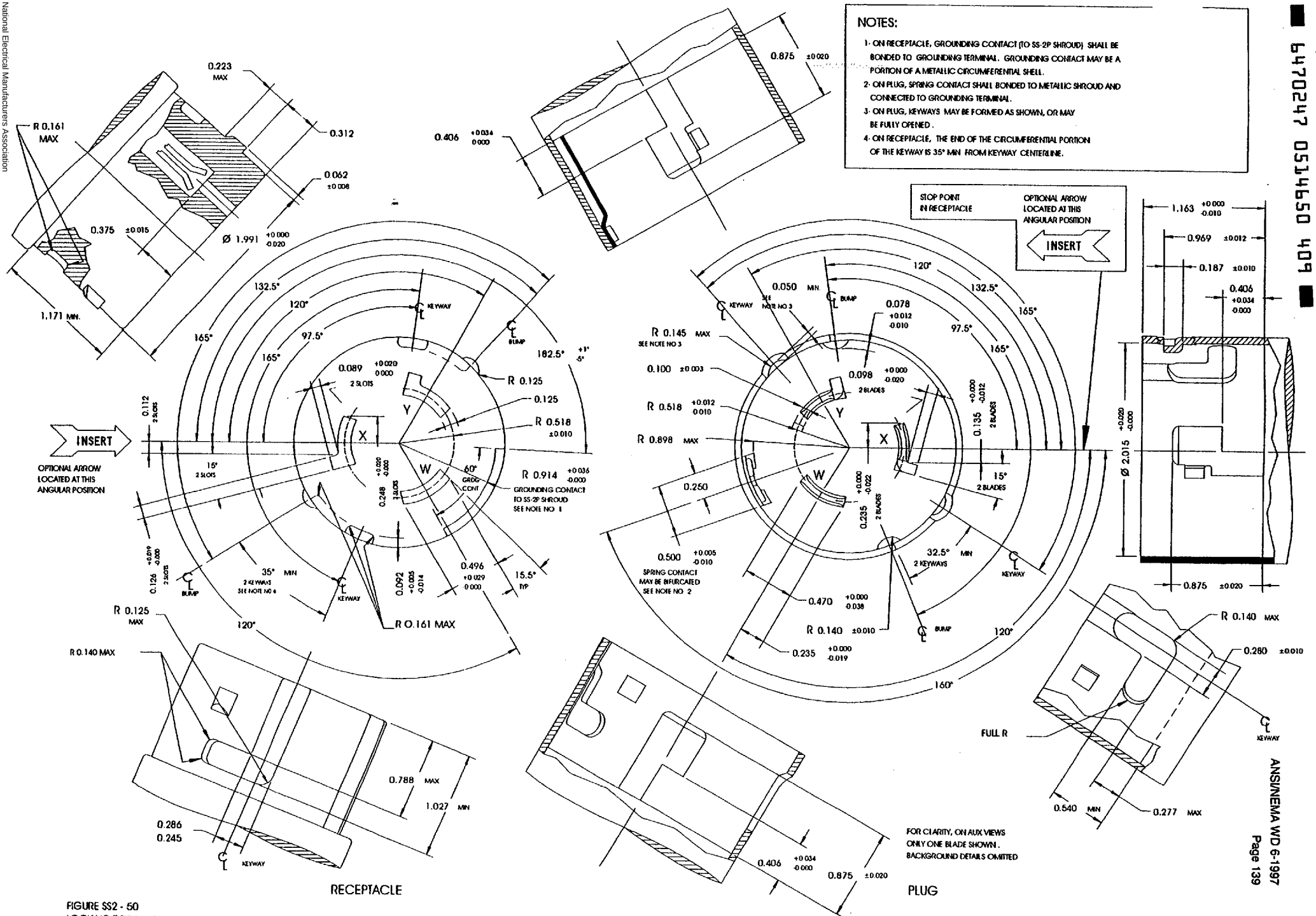

FIGURE SS2 - 50
LOCKING TYPE PLUG AND RECEPTACLE
MARINE SHIP-TO-SHORE USE FOR SMALL CRAFTS
125/250 Volts, 50 amperes, 3 pole, 4 wire, Grounding type

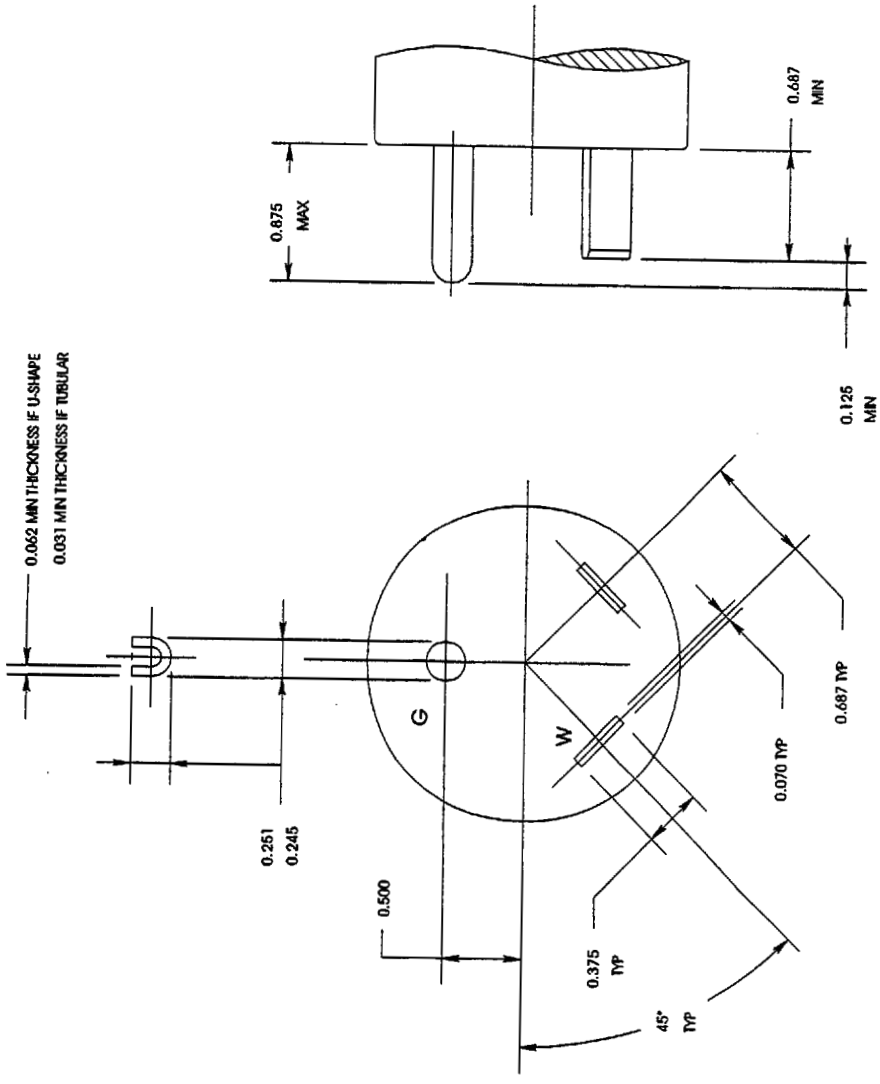

PLUG

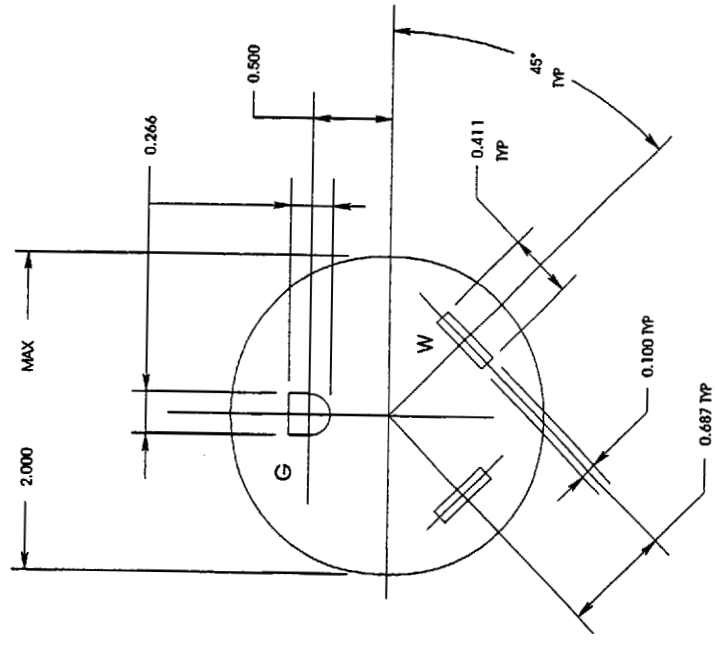

RECEPTACLE

FIGURE 17
TRAVEL TRAILER USE ONLY
120 volts AC, 30 amperes, 2 pole, 3 wire, Grounding type

Copyright National Electrical Manufacturers Association
Provided by IHS under license with NEMA
No reproduction or networking permitted without license from IHS
Not for Resale

NEMA CONFIGURATIONS FOR SPECIFIC PURPOSE PLUGS AND RECEPTACLES

	DESCRIPTION	NEMA NUMBER	15 AMPERE		30 AMPERE		50 AMPERE	
			RECEPTACLE	PLUG	RECEPTACLE	PLUG	RECEPTACLE	PLUG
MIDGET LOCKING	125V, 2 POLE, 2 WIRE	ML1						
	125V, 2 POLE, 3 WIRE GROUNDING	ML2						
	125/250V, 3 POLE, 3 WIRE	ML3						
FSL CONFIGURATIONS	28V DC, 2 POLE, 3 WIRE GROUNDING	FSL1						
	120V, 400HZ, 2 POLE, 3 WIRE GROUNDING	FSL2				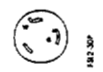		
	120V, 400 HZ, 3-PHASE 3 POLE, 4 WIRE GROUNDING	FSL3				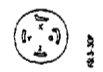		
	120/208V, 3 Y, 400 HZ 4 POLE, 5 WIRE GROUNDING	FSL4			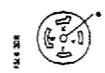	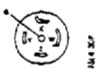		
MARINE SHIP-TO-SHORE	125V, 2 POLE, 3 WIRE GROUNDING	SS1						
	125/250V, 3 POLE, 4 WIRE GROUNDING	SS2						
TRAVEL TRAILER	120V AC, 2 POLE, 3 WIRE GROUNDING	TT						

NOTE: BLANK SPACES RESERVED FOR FUTURE CONFIGURATIONS

Copyright National Electrical Manufacturers Association
Provided by IHS under license with NEMA
No reproduction or networking permitted without license from IHS

Not for Resale

NEMA CONFIGURATIONS FOR STRAIGHT BLADE PLUGS AND RECEPTACLES

DESCRIPTION		NEMA NUMBER	15 AMPERE		20 AMPERE		30 AMPERE		50 AMPERE		60 AMPERE	
			RECEPTACLE	PLUG	RECEPTACLE	PLUG	RECEPTACLE	PLUG	RECEPTACLE	PLUG	RECEPTACLE	PLUG
2-POLE 2-WIRE	125V	1	1-15R	1-15P POLARIZED / NON POLAR.		1-20P MATES WITH 5-20R		1-30P MATES WITH 5-30R				
	250V	2		2-15P MATES WITH 6-15R	2-20R	2-20P	2-30R	2-30P				
	277V AC	3										
	600V	4										
2-POLE 3-WIRE GROUNDING	125V	5	5-15R	5-15P	5-20R	5-20P	5-30R	5-30P	5-50R	5-50P		
	125V	5ALT			5ALT-20R							
	250V	6	6-15R	6-15P	6-20R	6-20P	6-30R	6-30P	6-50R	6-50P		
	250V	6ALT			6ALT-20R							
	277V AC	7	7-15R	7-15P	7-20R	7-20P	7-30R	7-30P	7-50R	7-50P		
	347V AC	24	24-15R	24-15P	24-20R	24-20P	24-30R	24-30P	24-50R	24-50P		
	480V AC	8										
	600V AC	9										
3-POLE 3-WIRE	125 / 250V	10			10-20R	10-20P	10-30R	10-30P	10-50R	10-50P		
	3 ø 250V	11	11-15R	11-15P	11-20R	11-20P	11-30R	11-30P	11-50R	11-50P		
	3 ø 480V	12										
	3ø 600V	13										
3-POLE 4-WIRE GROUNDING	125 / 250V	14	14-15R	14-15P	14-20R	14-20P	14-30R	14-30P	14-50R	14-50P	14-60R	14-60P
	3 ø 250V	15	15-15R	15-15P	15-20R	15-20P	15-30R	15-30P	15-50R	15-50P	15-60R	15-60P
	3 ø 480V	16										
	3ø 600V	17										
4-POLE 4-WIRE	3 ØY 120 / 208V	18	18-15R	18-15P	18-20R	18-20P	18-30R	18-30P	18-50R	18-50P	18-60R	18-60P
	3 ØY 277 / 480V	19										
	3 ØY 347 / 600V	20										
4-POLE 5-WIRE GROUNDING	3 ØY 120 / 208V	21										
	3 ØY 277 / 480V	22										
	3 ØY 347 / 600V	23										

Copyright National Electrical Manufacturers Association
Provided by IHS under license with NEMA
No reproduction or networking permitted without license from IHS

Not for Resale

ARE RESERVED FOR FUTURE CONFIGURATIONS

NEMA CONFIGURATIONS FOR LOCKING PLUGS AND RECEPTACLES

DESCRIPTION		NEMA NUMBER	15 AMPERE		20 AMPERE		30 AMPERE		50 AMPERE		60 AMPERE	
			RECEPTACLE	PLUG	RECEPTACLE	PLUG	RECEPTACLE	PLUG	RECEPTACLE	PLUG	RECEPTACLE	PLUG
2-POLE 2-WIRE	125V	1										
	250V	2										
	277V AC	3										
	600V	4										
2-POLE 3-WIRE GROUNDING	125V	5										
	250V	6										
	277V AC	7										
	347V AC	24										
	480V AC	8										
	600V AC	9										
3-POLE 3-WIRE	125 / 250V	10										
	3 ø250V	11										
	3 ø480V	12										
	3ø600V	13										
3-POLE 4-WIRE GROUNDING	125 / 250V	14										
	3 ø250V	15										
	3ø480V	16										
	3ø600V	17										
4-POLE 4-WIRE	3 ØY 120 / 208V	18										
	3ØY 277 / 480V	19										
	3 øY 347 / 600V	20										
4-POLE 5-WIRE GROUNDING	3 ØY 120 / 208V	21										
	3 ØY 277 / 480V	22										
	3 ØY 347 / 600V	23										

NOTE: BLANK SPACES RESERVED FOR FUTURE CONFIGURATIONS

Copyright National Electrical Manufacturers Association
Provided by IHS under license with NEMA
No reproduction or networking permitted without license from IHS

Not for Resale

STD.NEMA WD 6-ENGL 1997 ■ 6470247 0514655 T90 ■

NEMA CONFIGURATONS FOR 20A / 30A 3, 4, AND 5 WIRE LOCKING PLUGS AND RECEPTACLES

DESCRIPTION		NEMA NUMBER	20 AMPERE		30 AMPERE		
			RECEPTACLE	PLUG	RECEPTACLE	PLUG	
2-POLE 3-WIRE GROUNDING	125V	5	L5-20R	L5-20P	L5-30R	L5-30P	
	250V	6	L6-20R	L6-20P	L6-30R	L6-30P	
	277V AC	7	L7-20R	L7-20P	L7-30R	L7-30P	
	347V AC	24	L24-20R	L24-20P			
	480V AC	8	L8-20R	L8-20P	L8-30R	L8-30P	
	600V AC	9	L9-20R	L9-20P	L9-30R	L9-30P	
3-POLE 3-WIRE	125 / 250V	10	L10-20R	L10-20P	L10-30R	L10-30P	
	3ø 250V	11	L11-20R	L11-20P	L11-30R	L11-30P	
	3ø 480V	12	L12-20R	L12-20P	L12-30R	L12-30P	
	3ø 600V	13			L13-30R	L13-30P	
3-POLE 4-WIRE GROUNDING	125 / 250V	14	L14-20R	L14-20P	L14-30R	L14-30P	
	3ø 250V	15	L15-20R	L15-20P	L15-30R	L15-30P	
	3ø 480V	16	L16-20R	L16-20P	L16-30R	L16-30P	
	3ø 600V	17			L17-30R	L17-30P	
4-POLE 4-WIRE	3 øY 120 / 208V	18	L18-20R	L18-20P	L18-30R	L18-30P	
	3 øY 277 / 480V	19	L19-20R	L19-20P	L19-30R	L19-30P	
	3 øY 347 / 600V	20	L20-20R	L20-20P	L20-30R	L20-30P	
4-POLE 5-WIRE GROUNDING	3 ø Y 120 / 208V	21	L21-20R	L21-20P	L21-30R	L21-30P	
	3 øY 277 / 480V	22	L22-20R	L22-20P	L22-30R	L22-30P	
	3 øY 347 / 600V	23	L23-20R	L23-20P	L23-20R	L23-20P	

NOTE: BLANK SPACES RESERVED FOR FUTURE CONFIGURATIONS

Copyright National Electrical Manufacturers Association
Provided by IHS under license with NEMA
No reproduction or networking permitted without license from IHS
Not for Resale