| NOTICE OF |
| ADOPTION |

ADOPTION NOTICE 1
24 January 1992 for
NEMA WD 6-1988
May 4, 1989

NEMA WD 6-1988 was adopted on 24 January 1992 and is approved for use by the Department of Defense (DoD). The National Electrical Manufacturers Association has furnished the clearance required by existing regulations. Copies of the document are stocked at the Standardization Documents Order Desk, Bldg. 4D, 700 Robbins Avenue, Philadelphia, PA 19111-5094, for issue to DoD activities only. All other requestors must obtain copies from:

National Electrical Manufacturers Association
2101 L Street, N.W.
Washington, DC 20037

Title of Document: Wiring Devices - Dimensional Requirements

Date of Specific Issue Adopted: May 4, 1989

Releasing Non-Government Standards Body: NEMA

Custodian:
Navy - YD

Military Coordinating Activity:
Navy - YD

(Project 5935-N417)

FSC 5935

DISTRIBUTION STATEMENT A. Approved for public release; distribution is unlimited.

Copyright National Electrical Manufacturers Association
Provided by IHS under license with NEMA
No reproduction or networking permitted without license from IHS
Not for Resale

WD 6-88 6470247 0006911 6

A-07-01
A-14-03

STANDARDS PUBLICATION NO. WD 6

nema

Wiring Devices— Dimensional Requirements

NEMA

NATIONAL ELECTRICAL MANUFACTURERS ASSOCIATION • 2101 L STREET, N.W., WASHINGTON, D.C. 20037

Copyright National Electrical Manufacturers Association
Provided by IHS under license with NEMA
No reproduction or networking permitted without license from IHS
Not for Resale

WD 6-88 6470247 0006912 8

ANSI/NEMA WD 6-1988

WD 6

WIRING DEVICES — DIMENSIONAL REQUIREMENTS

ANSI Approval Date: May 4, 1989

Published by:

National Electrical Manufacturers Association
2101 L Street, N.W.
Washington, DC 20037

© 1989 by National Electrical Manufacturers Association

Copyright National Electrical Manufacturers Association
Provided by IHS under license with NEMA
No reproduction or networking permitted without license from IHS

Not for Resale

TABLE OF CONTENTS

	Page
FOREWORD	i
SCOPE	ii
INTRODUCTION	1
WALL PLATE DIMENSIONS	3
YOKE DIMENSIONS OF RECEPTACLES AND SWITCHES FOR BOX MOUNTING	4
DIMENSIONS FOR DUPLEX DEVICES	5
DIMENSIONS FOR RECTANGULAR FACE DEVICES	6
DIMENSIONS FOR ROUND AND RECTANGULAR FACE SINGLE DEVICES	7
DIMENSIONS FOR INTERCHANGEABLE – TYPE SINGLE, DUPLEX, AND TRIPLEX DEVICES	8
WIRING DEVICE MAXIMUM ENVELOPE DIMENSIONS	9
DIMENSIONS FOR 2 GANG MOUNTING RECEPTACLES	10
DIMENSIONS FOR FLANGED INLETS AND CONNECTOR BODIES	11
FLAT BLADE HOLE LOCATIONS	12
CONFIGURATIONS FOR NONLOCKING PLUGS AND RECEPTACLES	13
CONFIGURATIONS FOR LOCKING PLUGS AND RECEPTACLES	57
CONFIGURATIONS FOR SPECIFIC PURPOSE PLUGS AND RECEPTACLES	134
CONFIGURATION CHARTS	135
APPENDIX – METRIC CONVERSION TABLES	137

Copyright National Electrical Manufacturers Association
Provided by IHS under license with NEMA
No reproduction or networking permitted without license from IHS
Not for Resale

Foreword

The purpose of these standards is to present the dimensional requirements of wiring devices in order to assist the user in selecting and obtaining the proper product for a particular need and to minimize the possibility of unsafe interchangeability between configurations.

In the preparation of this Standards Publication, input of users and other interested parties has been sought and evaluated. User input will be formally sought by the canvass procedures of the American National Standards Institute.

These standards are periodically reviewed by the Wiring Device Section of NEMA for any revisions necessary to keep them up-to-date with advancing technology. Proposed or recommended revisions should be submitted to:

Manager, Engineering Department
National Electrical Manufacturers Association
2101 L Street, N.W.
Washington, DC 20037

Publication No. WD 6-1988 revises and supersedes NEMA Standards Publication WD 6-1983.

Copyright National Electrical Manufacturers Association
Provided by IHS under license with NEMA
No reproduction or networking permitted without license from IHS
Not for Resale

Scope

These standards cover dimensional requirements for plugs and receptacles rated up to 60 amperes and 600 volts. They also include dimensions for wall plates.

These standards do not cover performance or other requirements since these are included in NEMA Standards Publication No. WD 1, *General Requirements for Wiring Devices.*

Copyright National Electrical Manufacturers Association
Provided by IHS under license with NEMA
No reproduction or networking permitted without license from IHS
Not for Resale

INTRODUCTION

Throughout this publication the following shall apply:

1. All dimensions are in inches. Metric equivalents are listed on page 137.
2. Decimal dimensions without tolerances shall be subject to a 0.005 inch tolerance.
3. Angular dimensions without tolerances shall be subject to a 1 degree tolerance.
4. "G" denotes equipment ground.
5. "W" denotes system ground.
6. Leading edges of plug blades shall be free of burrs and sharp edges.
7. All slots and slot tolerances symmetrically located about center lines.
8. Female contacts associated with plug blades that require a length of 0.125 minimum dimension greater than other blades should make electrical contact first, prior to the other contacts.
9. Configurations utilized on alternating current systems are limited to 50 or 60 hertz, unless otherwise specified.
10. Dimensions shown in the standard are for the purpose of interchangeability and do not preclude other designs.

Copyright National Electrical Manufacturers Association
Provided by IHS under license with NEMA
No reproduction or networking permitted without license from IHS

Not for Resale

(This page is left blank intentionally.)

Copyright National Electrical Manufacturers Association
Provided by IHS under license with NEMA
No reproduction or networking permitted without license from IHS

Not for Resale

WALL PLATE DIMENSIONS

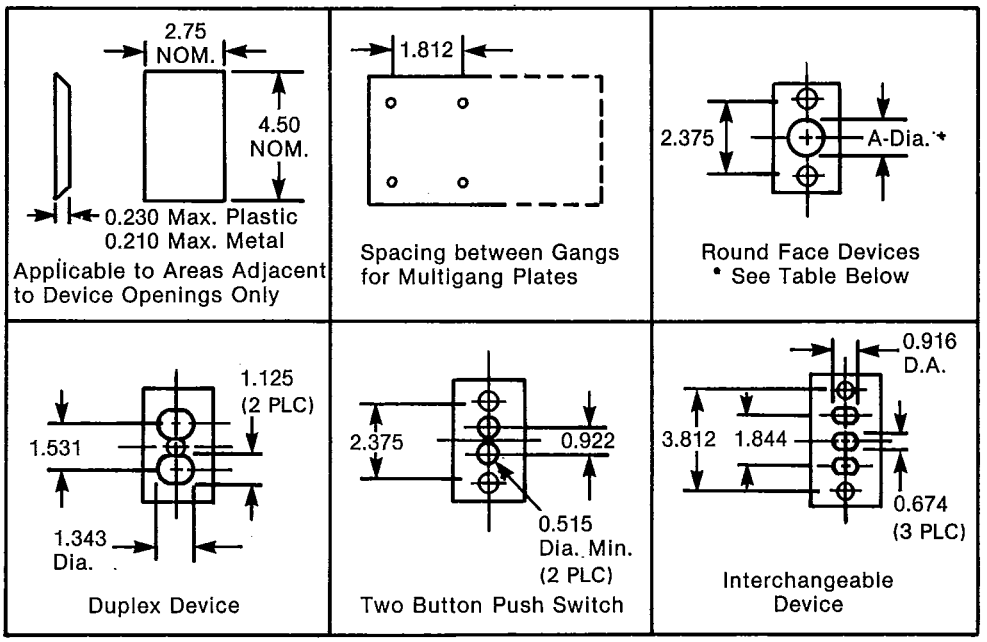

Dimensions for Round Face Devices and Plates

Nominal Diameter	Device Face Diameter	Wall Plate Opening (A-Dia.)	Nominal Diameter	Device Face Diameter	Wall Plate Opening (A-Dia.)
1	1.000 / 0.968	1.025 / 1.009	1⅝	1.640 / 1.610	1.664 / 1.646
1⅛	1.125 / 1.093	1.150 / 1.134	1 11/16	1.705 / 1.675	1.729 / 1.711
1¼	1.235 / 1.205	1.263 / 1.245	2⅛	2.125 / 2.093	2.156 / 2.140
1⅜	1.390 / 1.360	1.414 / 1.396	2¼	2.250 / 2.218	2.281 / 2.265 *
1 9/16	1.580 / 1.550	1.604 / 1.586	2 7/16	2.437 / 2.405	2.468 / 2.452 *

NEMA Standard 11-3-1983.

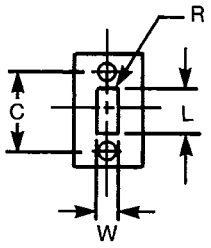

W MIN.	L MIN.	R	C	USED FOR
0.401	0.925	0	2.375	SWITCH
1.330	1.390	0.078	2.375	1.320 MAX. W × 1.380 MAX. L FACE DEVICE
1.150	1.150	0.250	2.375	1.140 MAX. W × 1.140 MAX. L FACE TELEPHONE JACK
1.310	2.630	0.094	3.812	1.300 MAX. W × 2.620 MAX. L FACE DEVICE
1.070	2.890	0.062	3.812	1.060 MAX. W × 2.880 MAX. L FACE DEVICE

1. Wall plate mounting holes to be counter sunk for #6-32 oval head machine screw.
2. Ribs are optional on plastic wall plates. Height, width and location of ribs shall clear the device for which the wallplate is designed or intended for use.
3. Overall wallplate sizes other than 2.75 × 4.50 may be provided for specific applications.

*These dimensions apply to multigang plates only.

NEMA Standard 5-25-1988.

Copyright National Electrical Manufacturers Association
Provided by IHS under license with NEMA
No reproduction or networking permitted without license from IHS
Not for Resale

YOKE DIMENSIONS OF RECEPTACLES AND SWITCHES FOR BOX MOUNTING

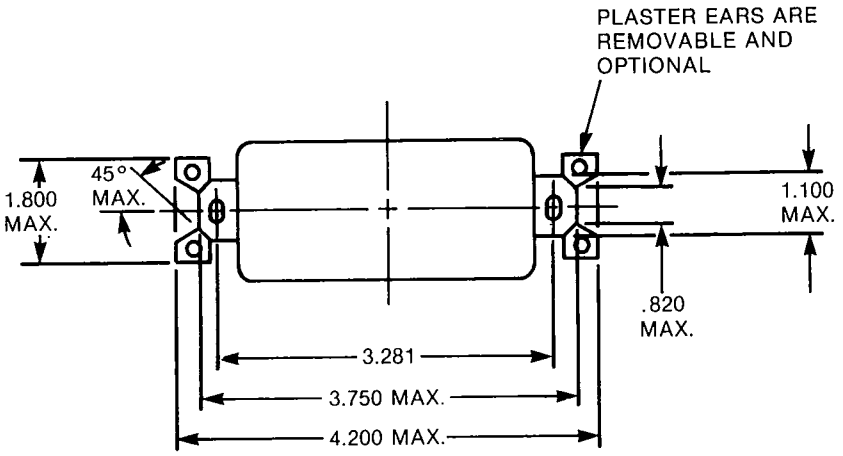

ALTERNATE YOKE CONSTRUCTION

(Other Dimensions Same as Above)

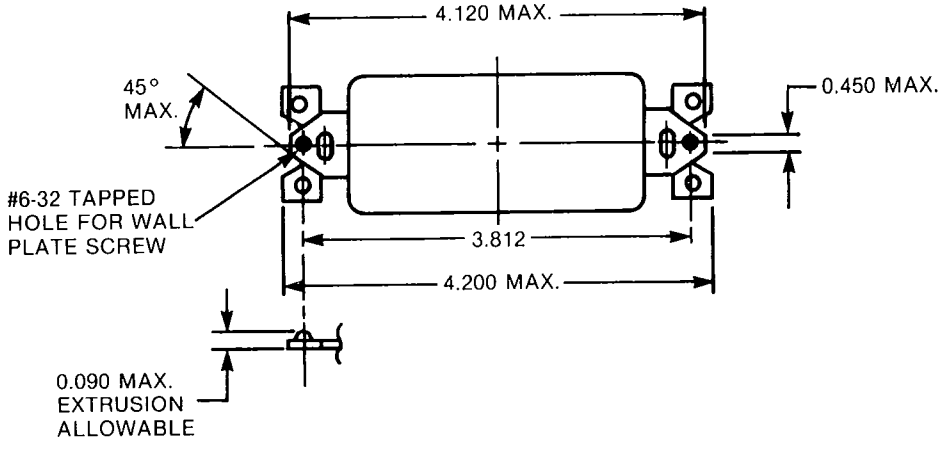

NEMA Standard 11-3-1983.

Copyright National Electrical Manufacturers Association
Provided by IHS under license with NEMA
No reproduction or networking permitted without license from IHS
Not for Resale

DIMENSIONS FOR DUPLEX DEVICES

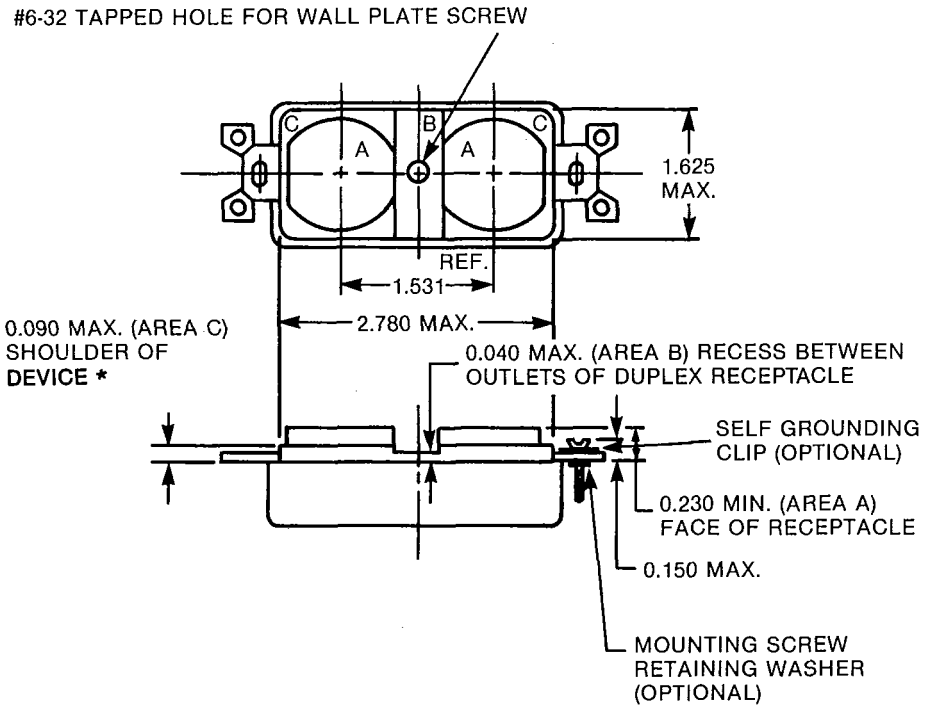

1. For dimensions for Area "A" see appropriate configuration.
2. See page 4 for yoke dimensions.

*Suggested Standard for Future Design 11-3-1983.
NEMA Standard 11-3-1983.

Copyright National Electrical Manufacturers Association
Provided by IHS under license with NEMA
No reproduction or networking permitted without license from IHS

Not for Resale

DIMENSIONS FOR RECTANGULAR FACE DEVICES

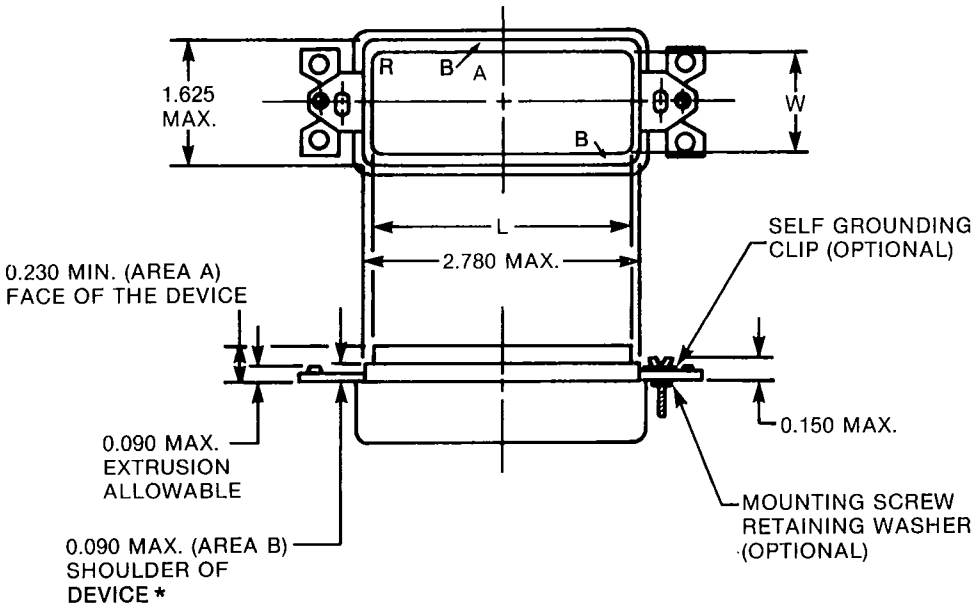

W MAX.	L MAX.	R	DESCRIPTION
1.300	2.620	0.094	DUPLEX DEVICE
1.060	2.880	0.062	TRIPLEX DEVICE

1. See page 4 for yoke dimensions.

*Suggested Standard for Future Design 11-3-1983.

NEMA Standard 11-3-1983.

Copyright National Electrical Manufacturers Association
Provided by IHS under license with NEMA
No reproduction or networking permitted without license from IHS
Not for Resale

DIMENSIONS FOR ROUND AND RECTANGULAR FACE SINGLE DEVICES

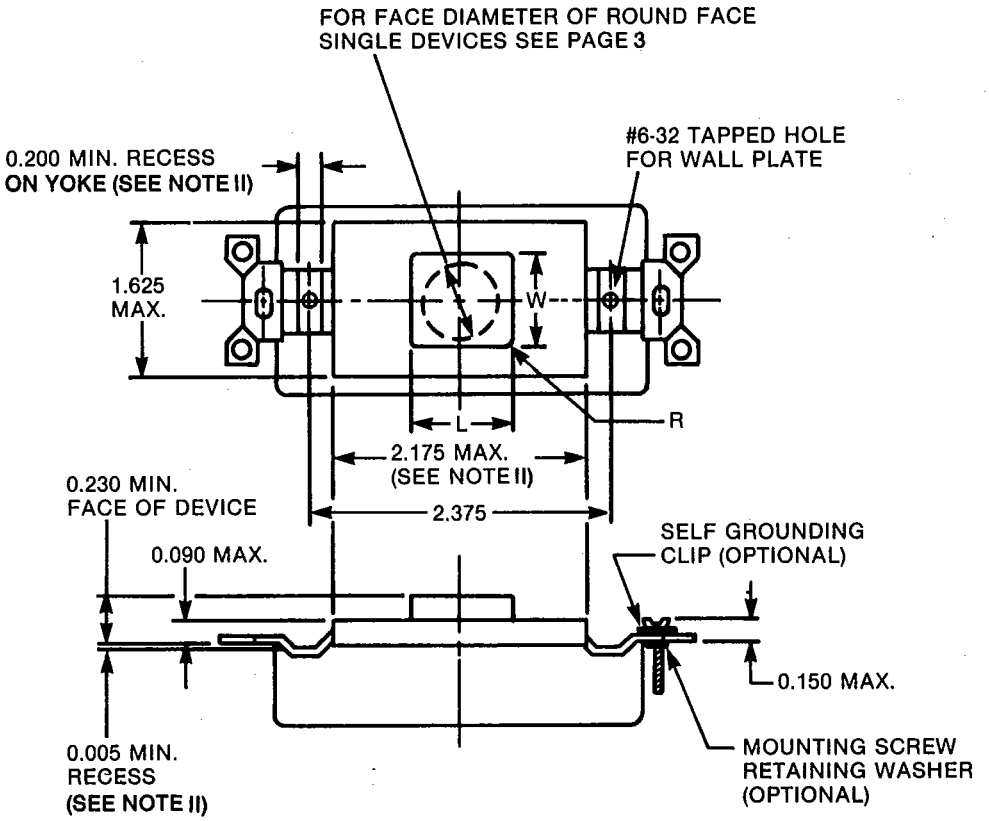

W MAX.	L MAX.	R	DEVICE DESCRIPTION
1.320	1.380	0.078	SINGLE RECEPTACLE
0.396	0.915	0	SWITCH

NOTE I: See page 4 for yoke dimensions.
NOTE II: This dimension is intended for straight blade single receptacles and switches to clear the reinforcing ribs in plastic plates.

NEMA Standard 11-3-1983.

Copyright National Electrical Manufacturers Association
Provided by IHS under license with NEMA
No reproduction or networking permitted without license from IHS
Not for Resale

DIMENSIONS FOR INTERCHANGEABLE TYPE SINGLE, DUPLEX AND TRIPLEX DEVICES

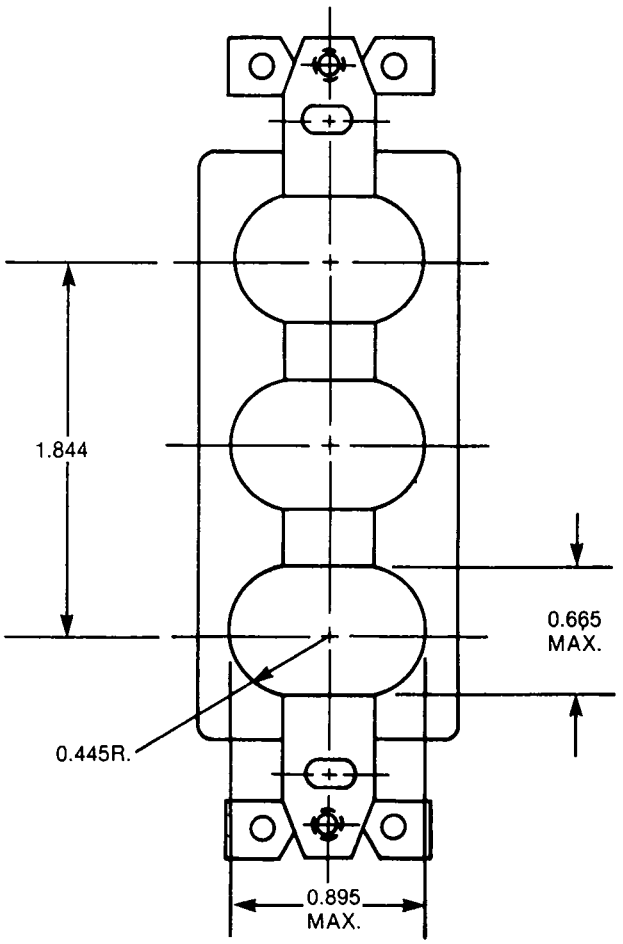

1. See page 4 for yoke dimensions.

NEMA Standard 11-3-1983.

Copyright National Electrical Manufacturers Association
Provided by IHS under license with NEMA
No reproduction or networking permitted without license from IHS
Not for Resale

WIRING DEVICE MAXIMUM ENVELOPE DIMENSIONS

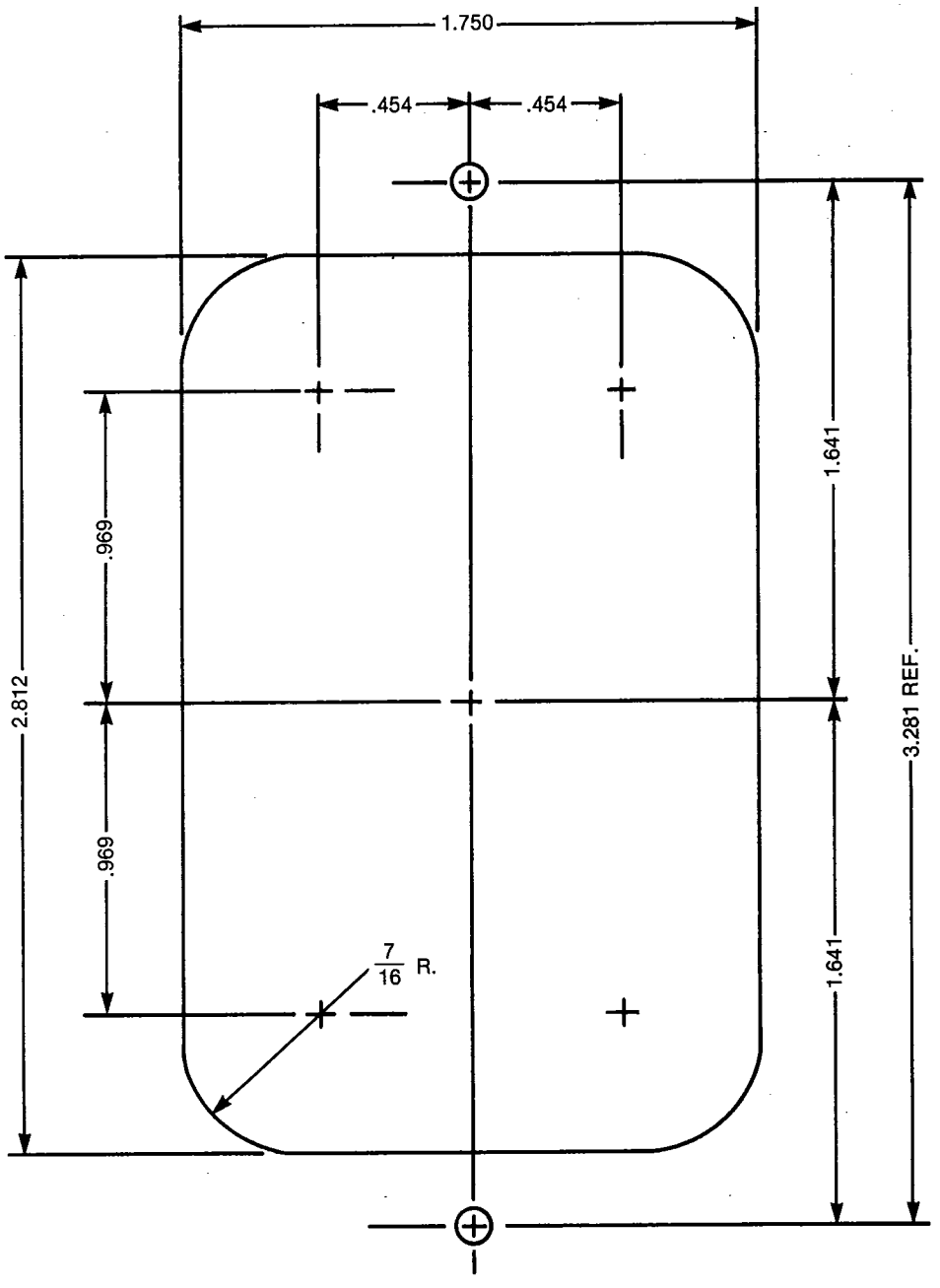

NOTE: This standard corresponds to NEMA Standards Publication OS-1 *Sheet-Steel Outlet Boxes, Device Boxes, Covers and Box Supports,* standard for minimum box/cover face opening, and does not address electrical clearances. Available space at depths within the box may be further reduced by accessory hardware such as machine screws, nails, cable clamps, fixture studs, etc.

Suggested Standard for Future Design 11-3-1983.

Copyright National Electrical Manufacturers Association
Provided by IHS under license with NEMA
No reproduction or networking permitted without license from IHS

Not for Resale

ENSIONS FOR 2 GANG MOUNTING RECEPTACLES

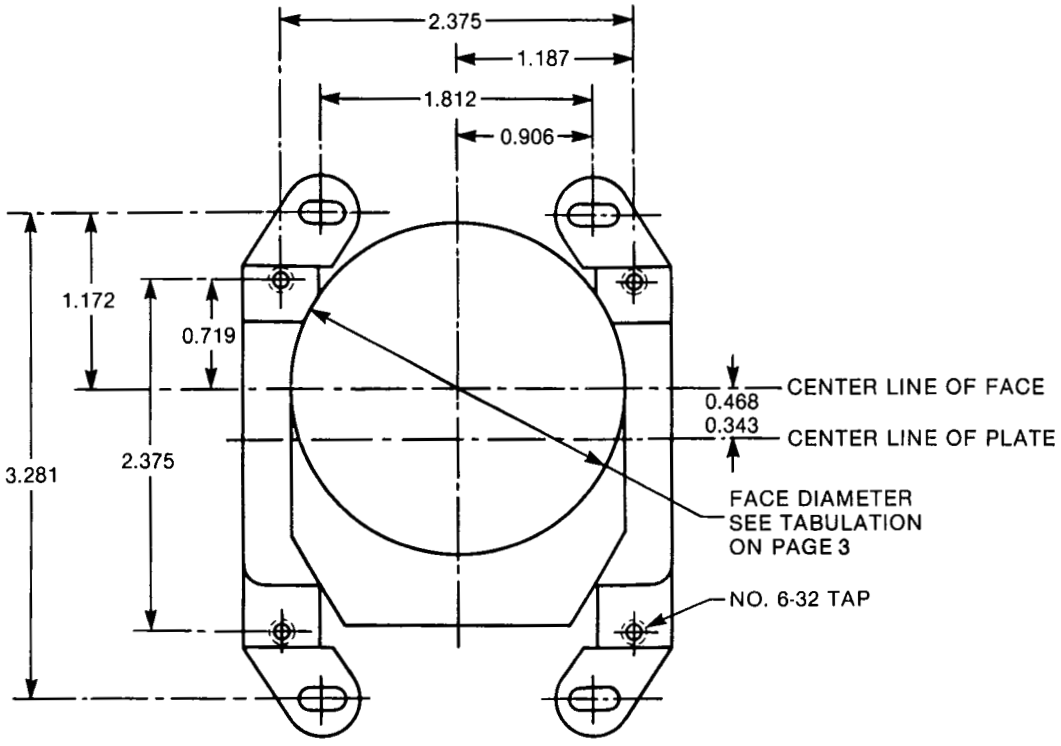

OFF CENTER FACE TYPE

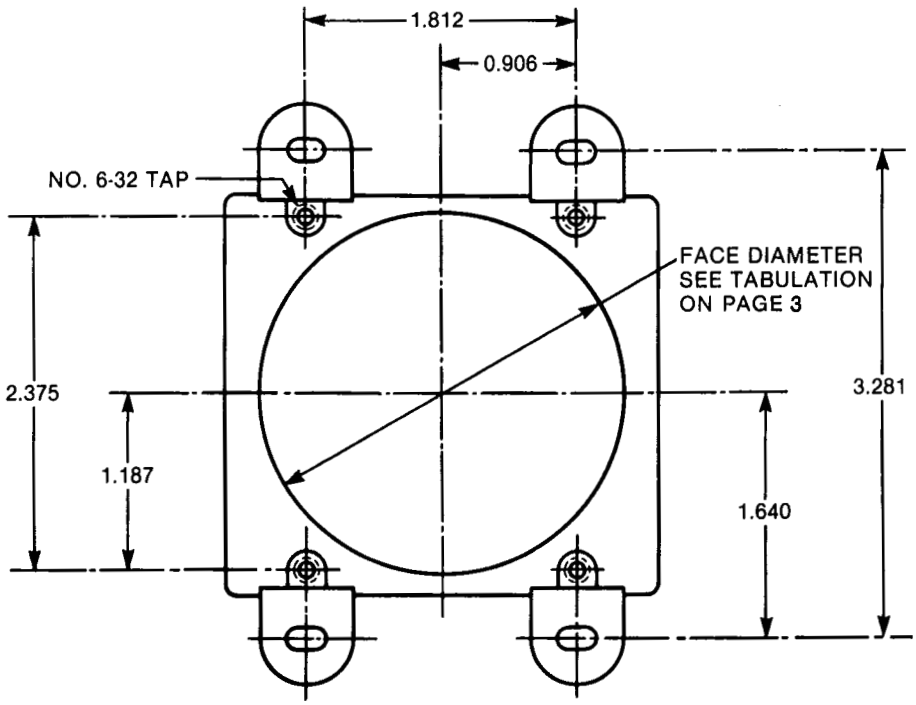

CENTER FACE TYPE

NEMA Standard 9-20-1978.

Copyright National Electrical Manufacturers Association
Provided by IHS under license with NEMA
No reproduction or networking permitted without license from IHS
Not for Resale

DIMENSIONS FOR FLANGED INLETS AND CONNECTOR BODIES

Blade dimensions shall conform with the dimensions for plug blades of the same rating as shown in individual configuration drawings. The male base shall accept a cylinder of diameter "C" described about the center of the plug cap configuration of the same rating for a depth not less than dimension "B".

The connector body shall fit within a circle of diameter "C" described about the center of the receptacle configuration of the same rating for a length not less than 0.015 inch plus the maximum length of dimension "B".

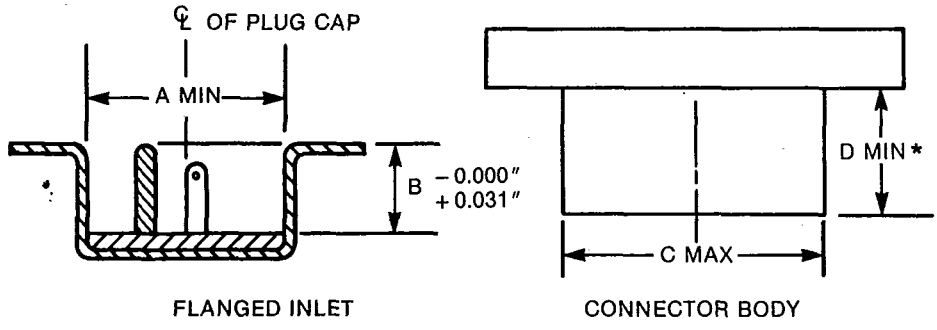

*D Minimum = B Maximum + 0.015 Inch.

Configuration Number	Dimensions, Inches		
	A	B	C
ML-1	0.990	0.468	0.970
ML-2, ML-3	1.150	0.468	1.130
L1-15, 1-15, 2-15, L2-20, L5-15, 5-15, 5-20, L6-15, 6-15, 6-20, L7-15, 7-15, L11-15, 11-15, 11-20, 14-15, 15-15, 18-15, 24-15, 24-20	1.550	0.843	1.531
2-20, 7-20, 10-20, 14-20, 15-20, 18-20	2.030	0.875	2.010
2-30, 5-30, 5-50, 6-30, 6-50, 7-30, 7-50, 10-30, 10-50, 11-30, 11-50, 14-30, 14-50, 14-60, 15-30, 15-50, 15-60, 18-30, 18-50, 18-60, 24-30, 24-50	2.620	1.406	2.600
L5-20, L6-20, L7-20, L8-20, L9-20, L10-20, L11-20, L12-20	1.880	0.921	1.860
L14-20, L15-20, L16-20, L18-20, L19-20, L20-20, L21-20, L22-20, L23-20, L24-20	2.000	0.921	1.980
L14-30, L15-30, L16-30, L17-30, L18-30, L19-30, L20-30, L21-30, L22-30, L23-30	2.000	1.000	1.980
L5-30, L6-30, L7-30, L8-30, L9-30, L10-30, L11-30, L12-30, L13-30	1.880	1.000	1.860

Suggested Standard for Future Design 11-3-1983.

Copyright National Electrical Manufacturers Association
Provided by IHS under license with NEMA
No reproduction or networking permitted without license from IHS
Not for Resale

FLAT BLADE HOLE LOCATIONS—GENERAL INFORMATION

LOCATION 1:

ALL 15- AND 20-AMPERE CONFIGURATIONS:
HOLE IN BLADE—OPTIONAL, INTENDED FOR MANUFACTURING PURPOSES.

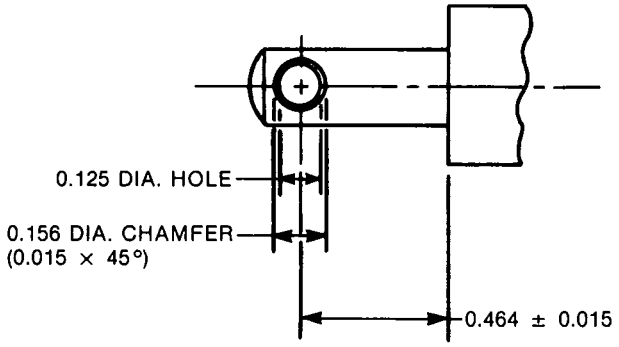

LOCATION 2:

ALL 30-, 50-, AND 60-AMPERE CONFIGURATIONS:
HOLE IN FLAT BLADE—OPTIONAL, INTENDED FOR MANUFACTURING PURPOSES.

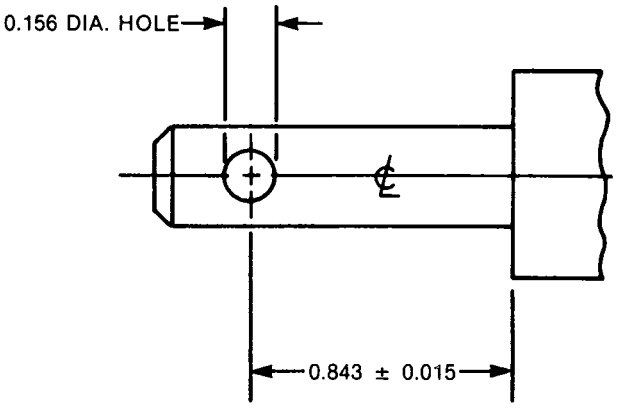

NEMA Standard 11-3-1983.

Copyright National Electrical Manufacturers Association
Provided by IHS under license with NEMA
No reproduction or networking permitted without license from IHS
Not for Resale

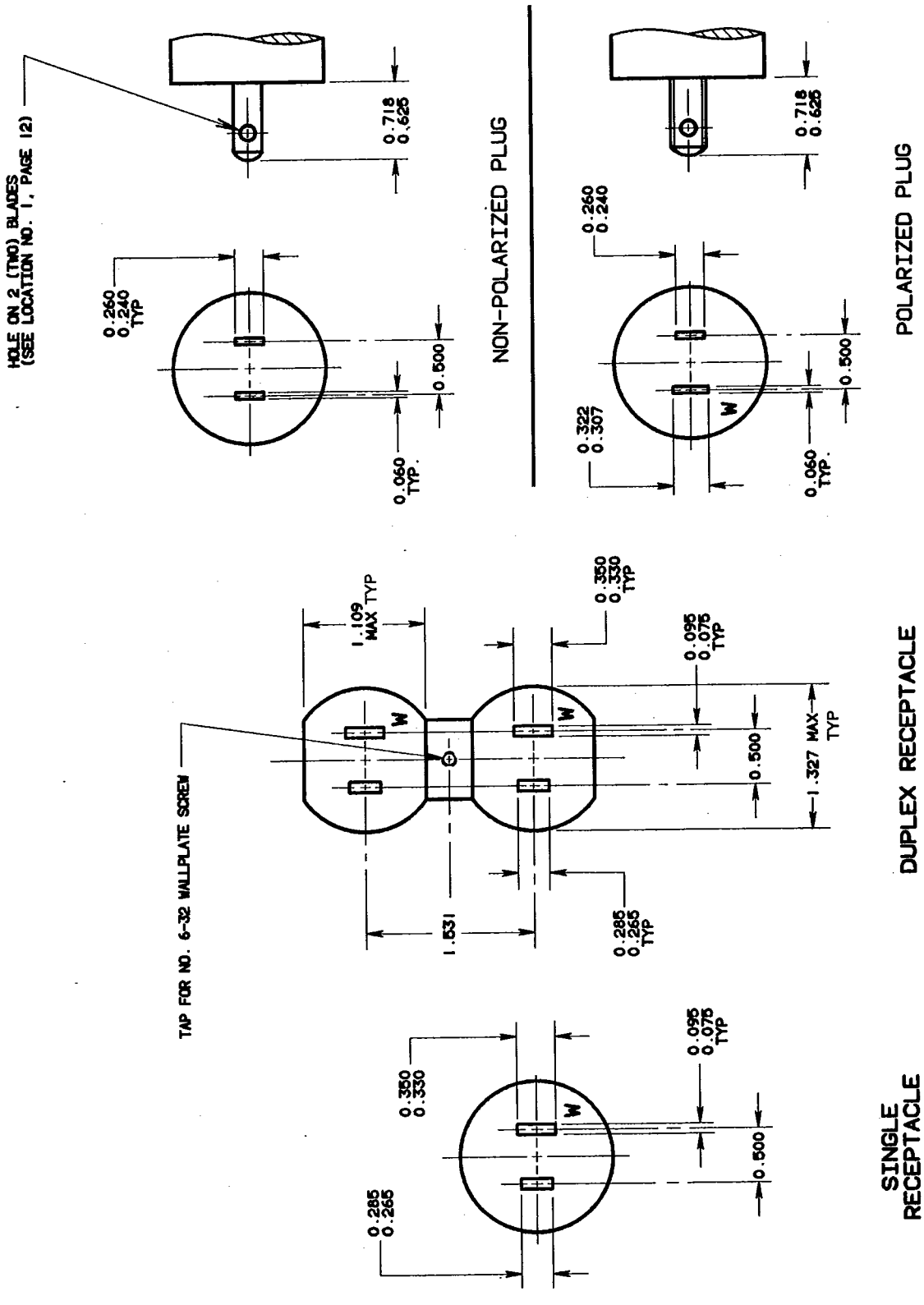

Figure 1-15
PLUG AND RECEPTACLE
125 volts, 15 amperes, 2 pole, 2 wire
NEMA Standard 5-25-1988.

Copyright National Electrical Manufacturers Association
Provided by IHS under license with NEMA
No reproduction or networking permitted without license from IHS

Not for Resale

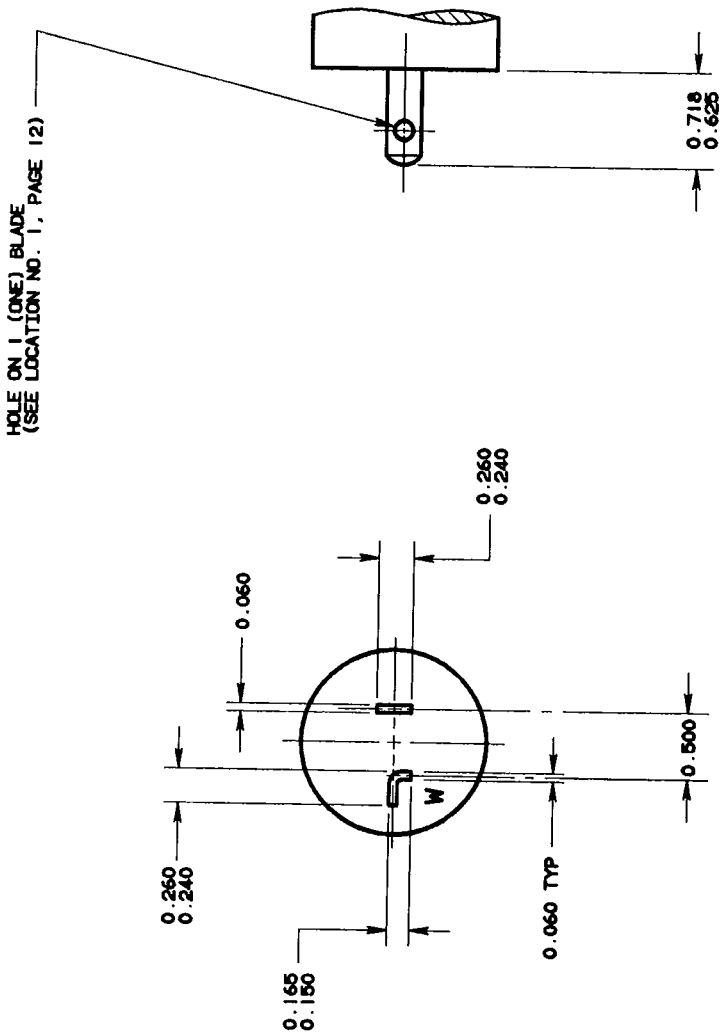

Figure 1-20
PLUG
125 volts, 20 amperes, 2 pole, 2 wire
NEMA Standard 5-25-1988.

PLUG

NOTE: THIS PLUG MATES WITH RECEPTACLE CONFIGURATION 5-20.

Copyright National Electrical Manufacturers Association
Provided by IHS under license with NEMA
No reproduction or networking permitted without license from IHS
Not for Resale

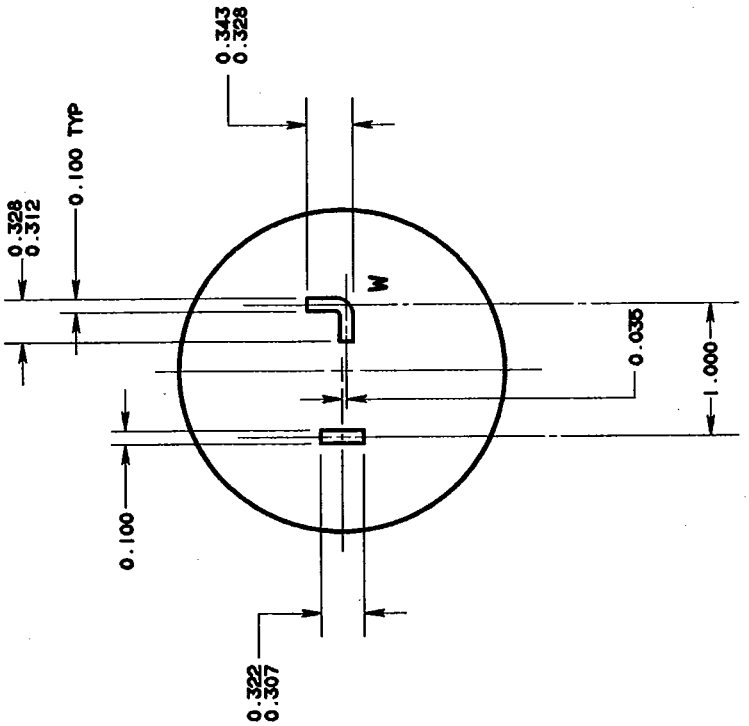

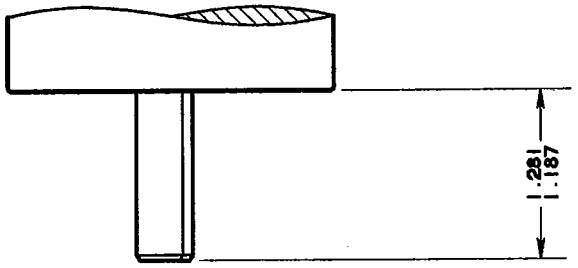

PLUG

NOTE: THIS PLUG MATES WITH RECEPTACLE CONFIGURATION 5-30.

Figure 1-30
PLUG
125 volts, 30 amperes, 2 pole, 2 wire
NEMA Standard 5-25-1988.

Copyright National Electrical Manufacturers Association
Provided by IHS under license with NEMA
No reproduction or networking permitted without license from IHS

Not for Resale

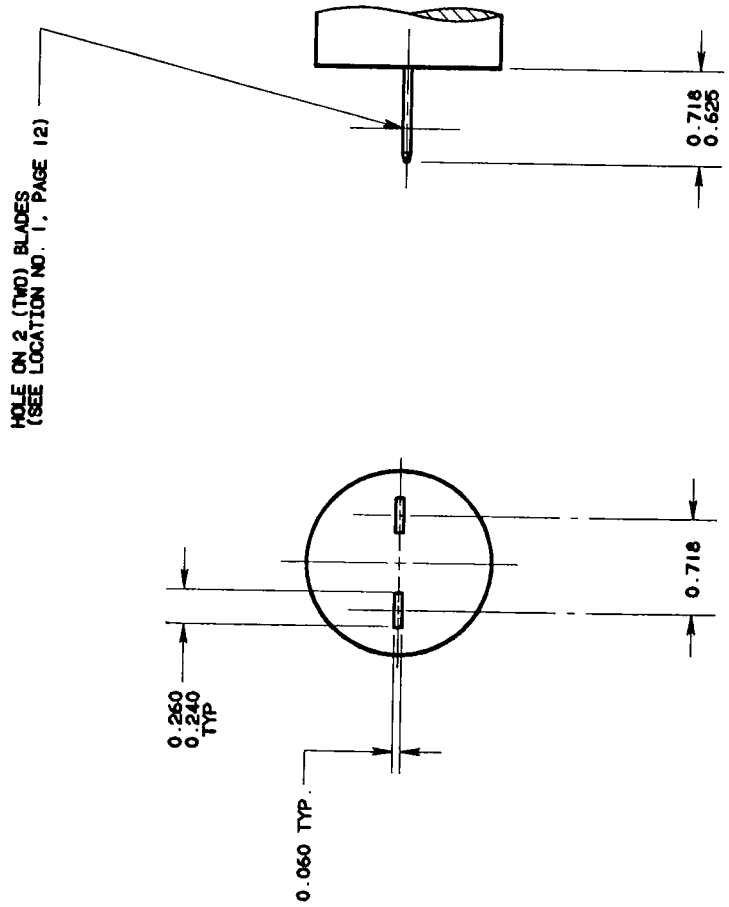

PLUG

NOTE: THIS PLUG MATES WITH RECEPTACLE CONFIGURATION 6-15.

Figure 2-15
PLUG
250 volts, 15 amperes, 2 pole, 2 wire
NEMA Standard 5-25-1988.

Copyright National Electrical Manufacturers Association
Provided by IHS under license with NEMA
No reproduction or networking permitted without license from IHS

Not for Resale

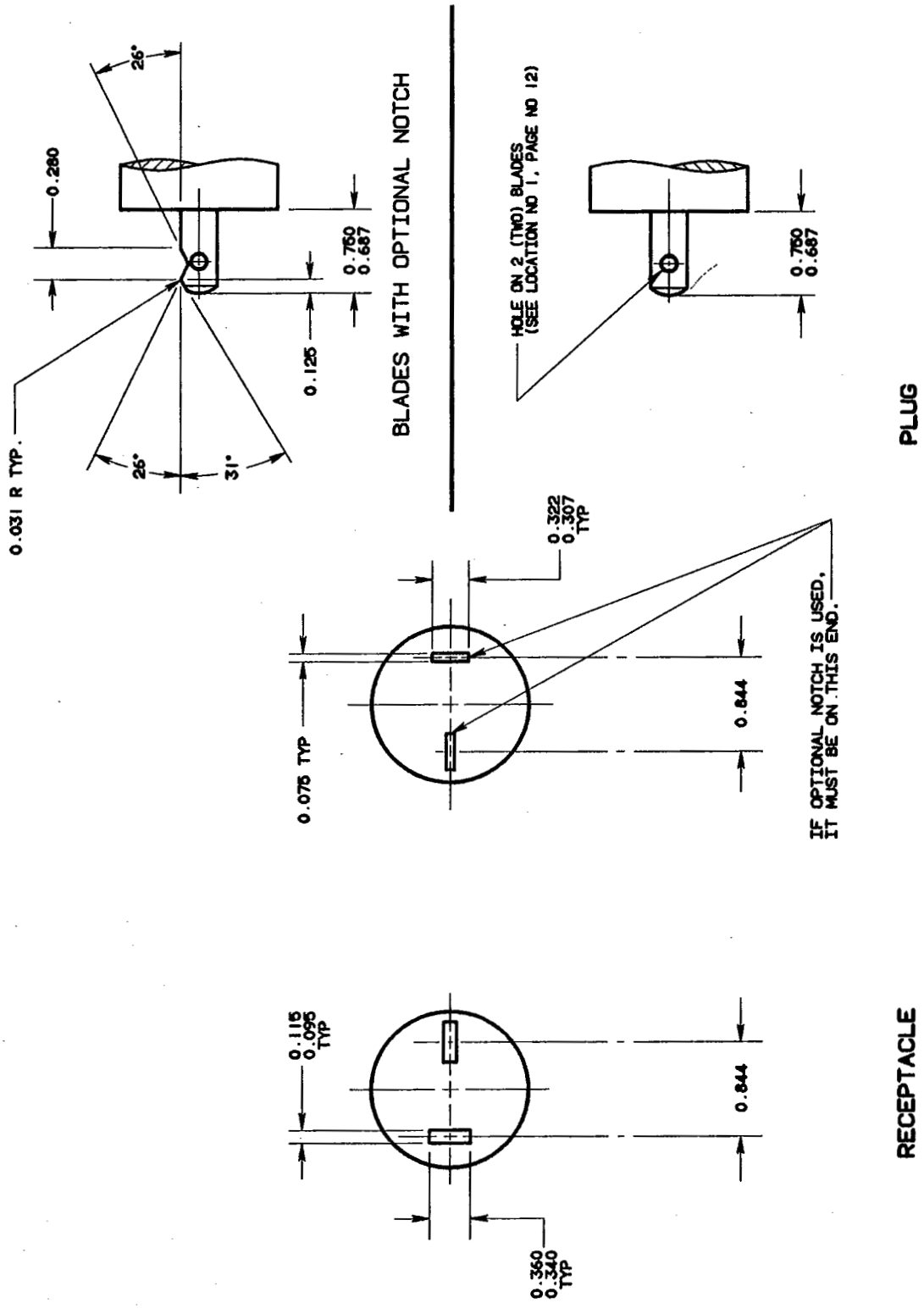

Figure 2-20
PLUG AND RECEPTACLE
250 volts, 20 amperes, 2 pole, 2 wire
NEMA Standard 5-25-1988

Copyright National Electrical Manufacturers Association
Provided by IHS under license with NEMA
No reproduction or networking permitted without license from IHS

Not for Resale

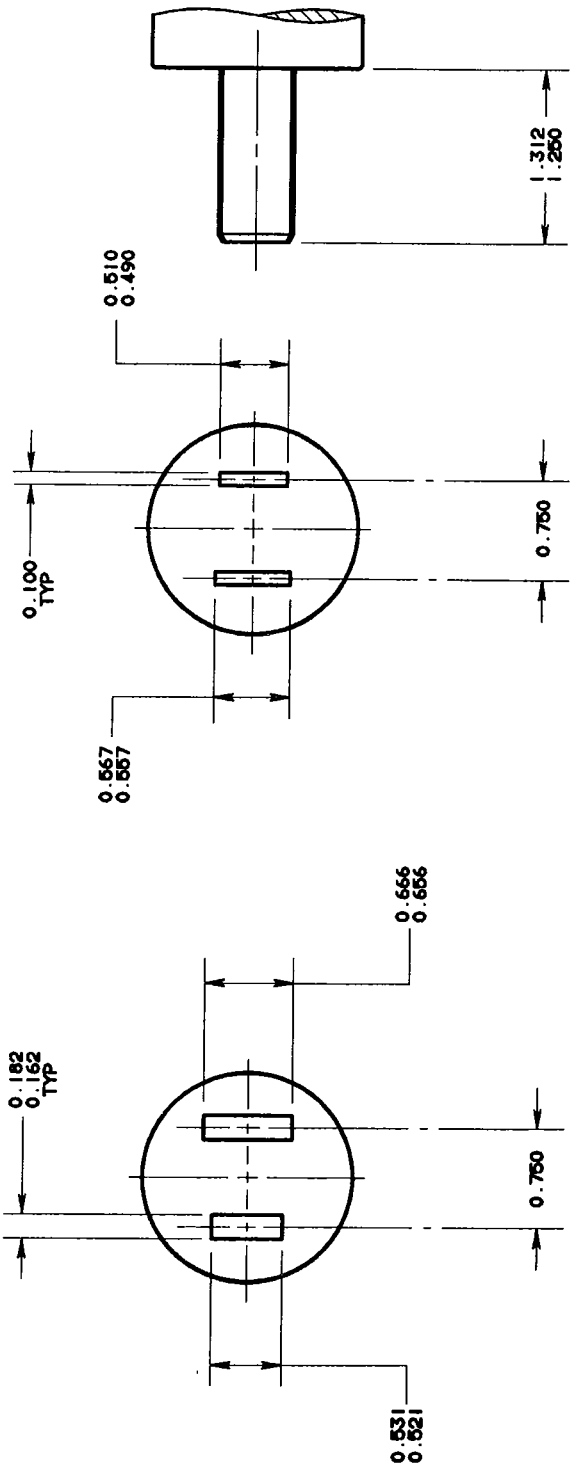

Figure 2-30
PLUG AND RECEPTACLE
250 volts, 30 amperes, 2 pole, 2 wire
NEMA Standard 5-25-1988.

Copyright National Electrical Manufacturers Association
Provided by IHS under license with NEMA
No reproduction or networking permitted without license from IHS

Not for Resale

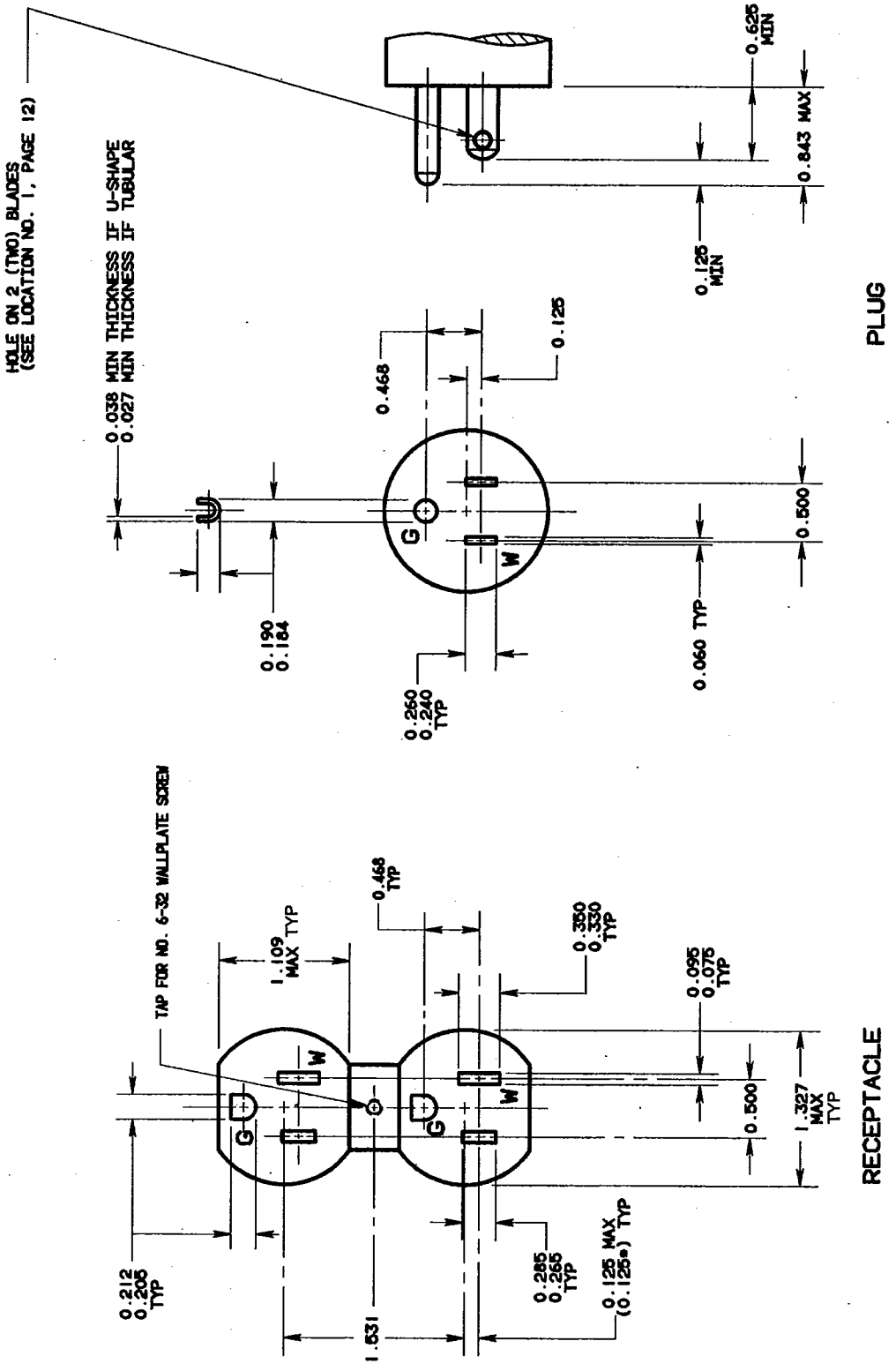

Figure 5-15
PLUG AND RECEPTACLE
125 volts, 15 amperes, 2 pole, 3 wire, grounding type
NEMA Standard 5-25-1988.

*Suggested Standard for Future Design 5-25-1988.

Copyright National Electrical Manufacturers Association
Provided by IHS under license with NEMA
No reproduction or networking permitted without license from IHS

Not for Resale

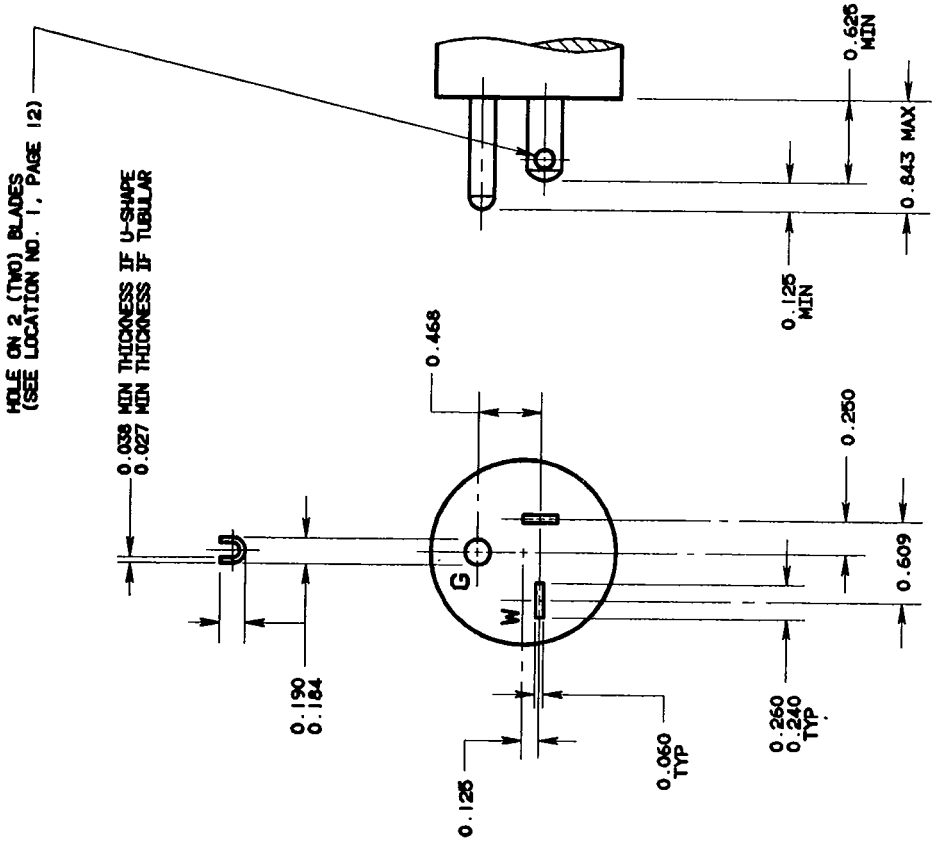

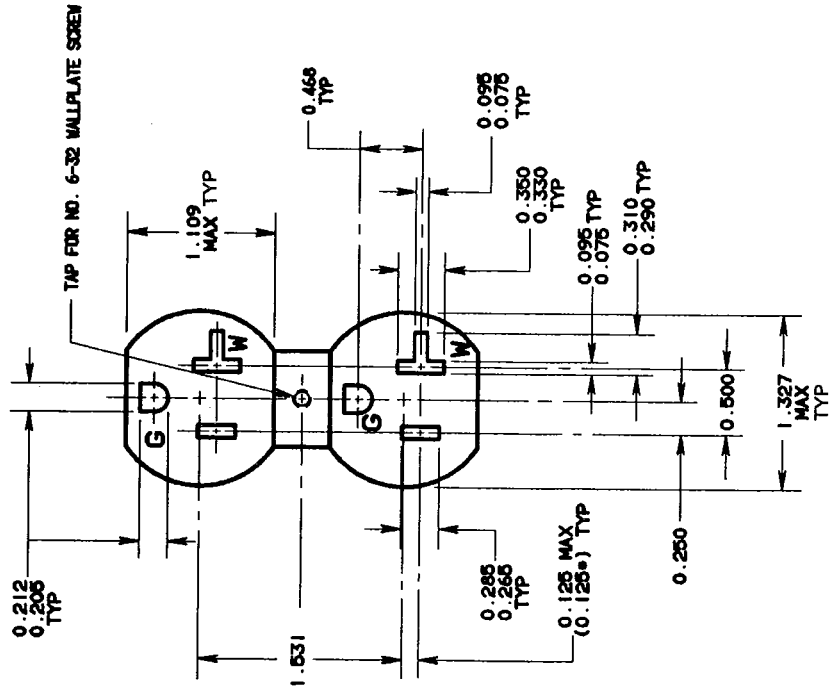

Figure 5-20
PLUG AND RECEPTACLE
125 volts, 20 amperes, 2 pole, 3 wire, grounding type
NEMA Standard 5-25-1988.

*Suggested Standard for Future Design 5-25-1988.

Copyright National Electrical Manufacturers Association
Provided by IHS under license with NEMA
No reproduction or networking permitted without license from IHS

Not for Resale

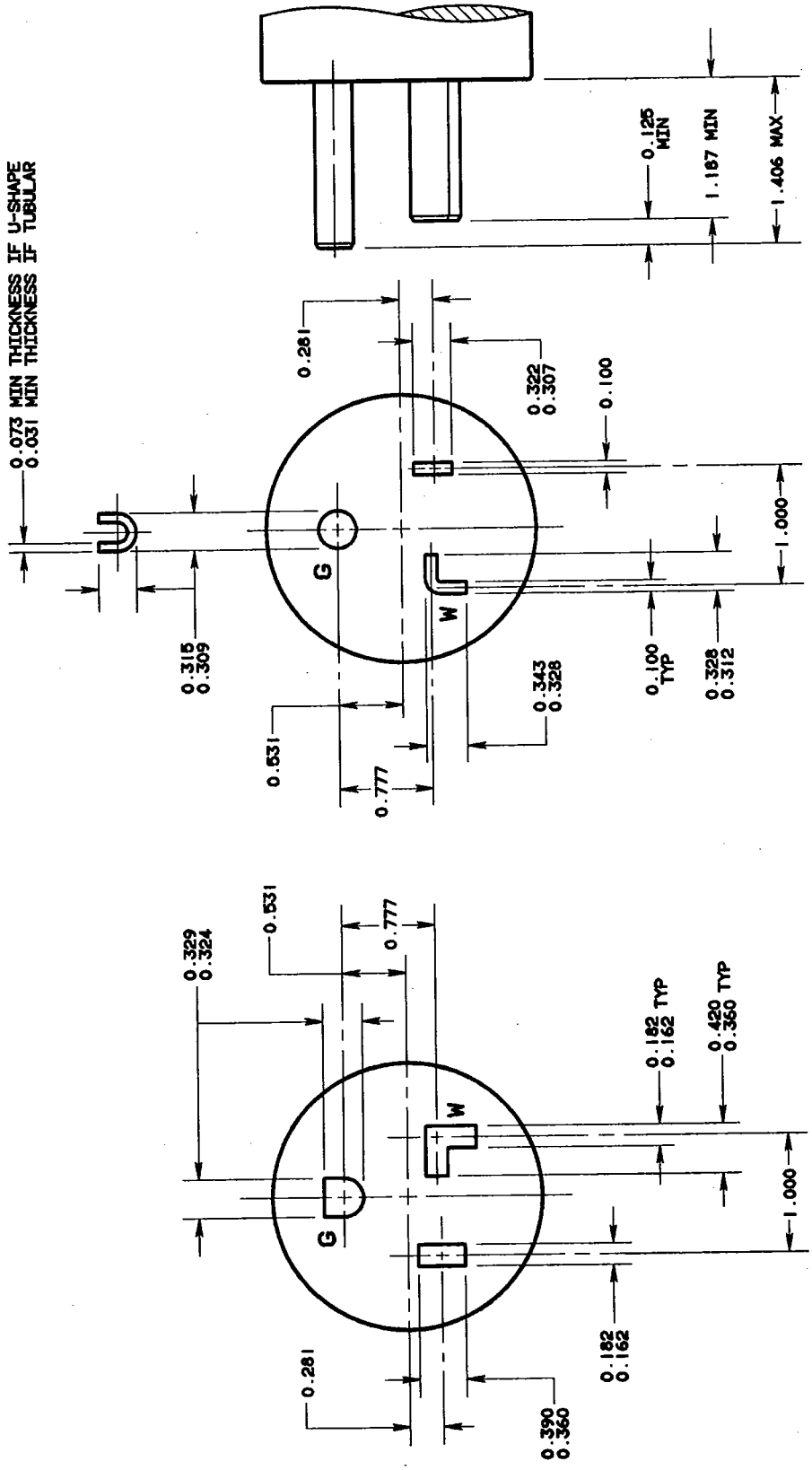

Figure 5-30
PLUG AND RECEPTACLE
125 volts, 30 amperes, 2 pole, 3 wire, grounding type
NEMA Standard 5-25-1988.

Copyright National Electrical Manufacturers Association
Provided by IHS under license with NEMA
No reproduction or networking permitted without license from IHS

Not for Resale

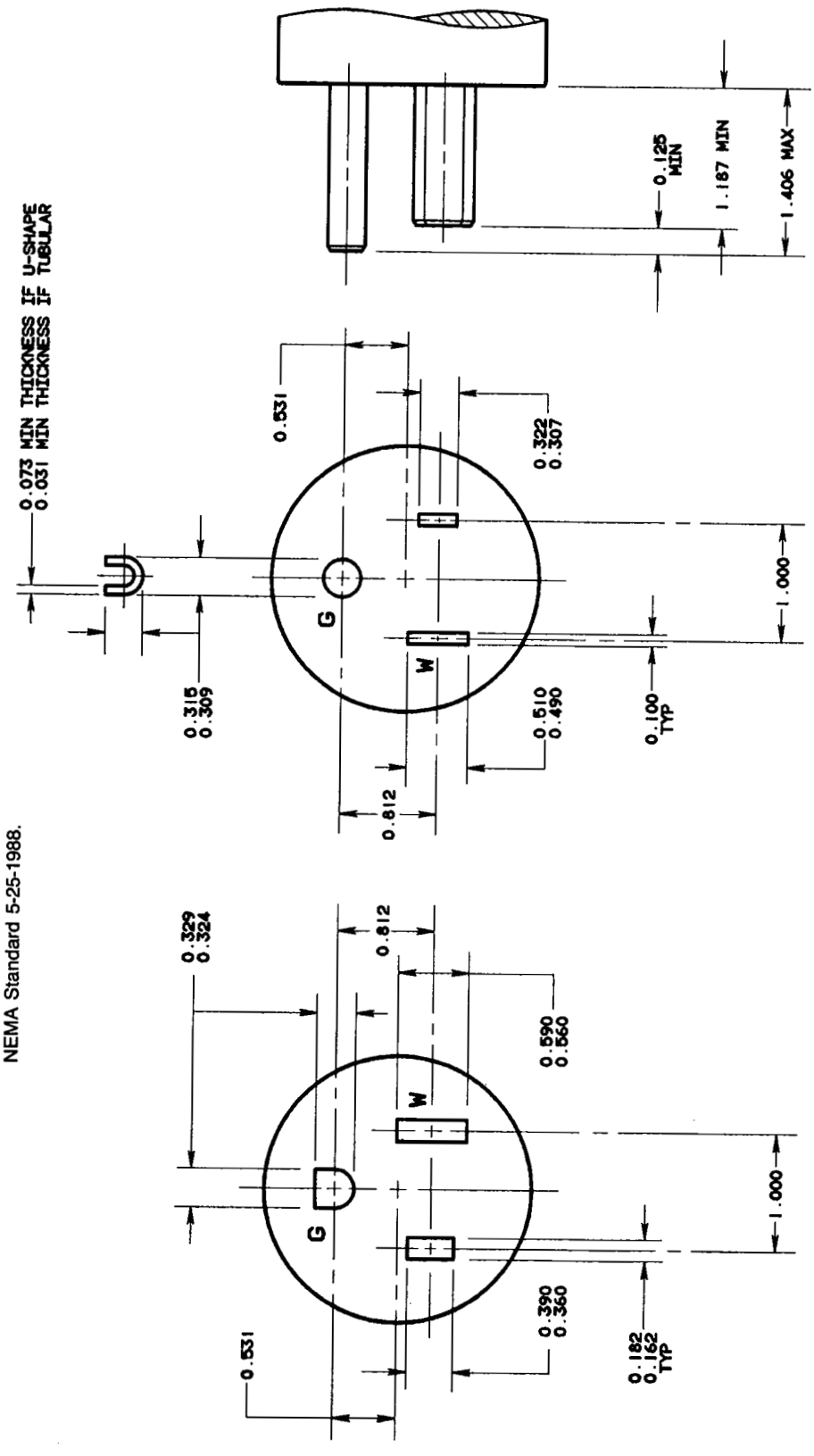

Figure 5-50
PLUG AND RECEPTACLE
125 volts, 50 amperes, 2 pole, 3 wire, grounding type
NEMA Standard 5-25-1988.

Copyright National Electrical Manufacturers Association
Provided by IHS under license with NEMA
No reproduction or networking permitted without license from IHS

Not for Resale

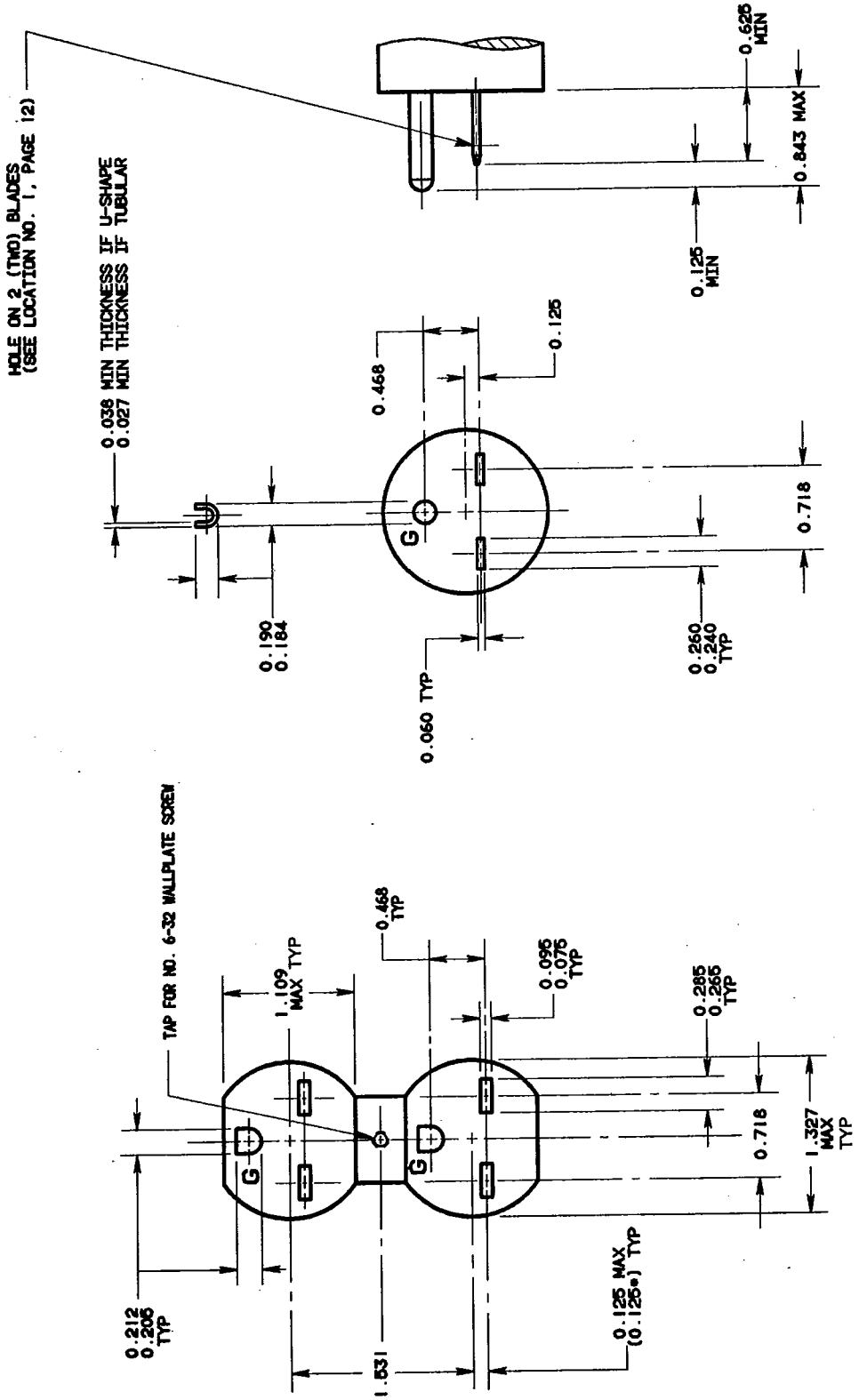

Figure 6-15
PLUG AND RECEPTACLE
250 volts, 15 amperes, 2 pole, 3 wire, grounding type
NEMA Standard 5-25-1988.

*Suggested Standard for Future Design 5-25-1988.

Copyright National Electrical Manufacturers Association
Provided by IHS under license with NEMA
No reproduction or networking permitted without license from IHS

Not for Resale

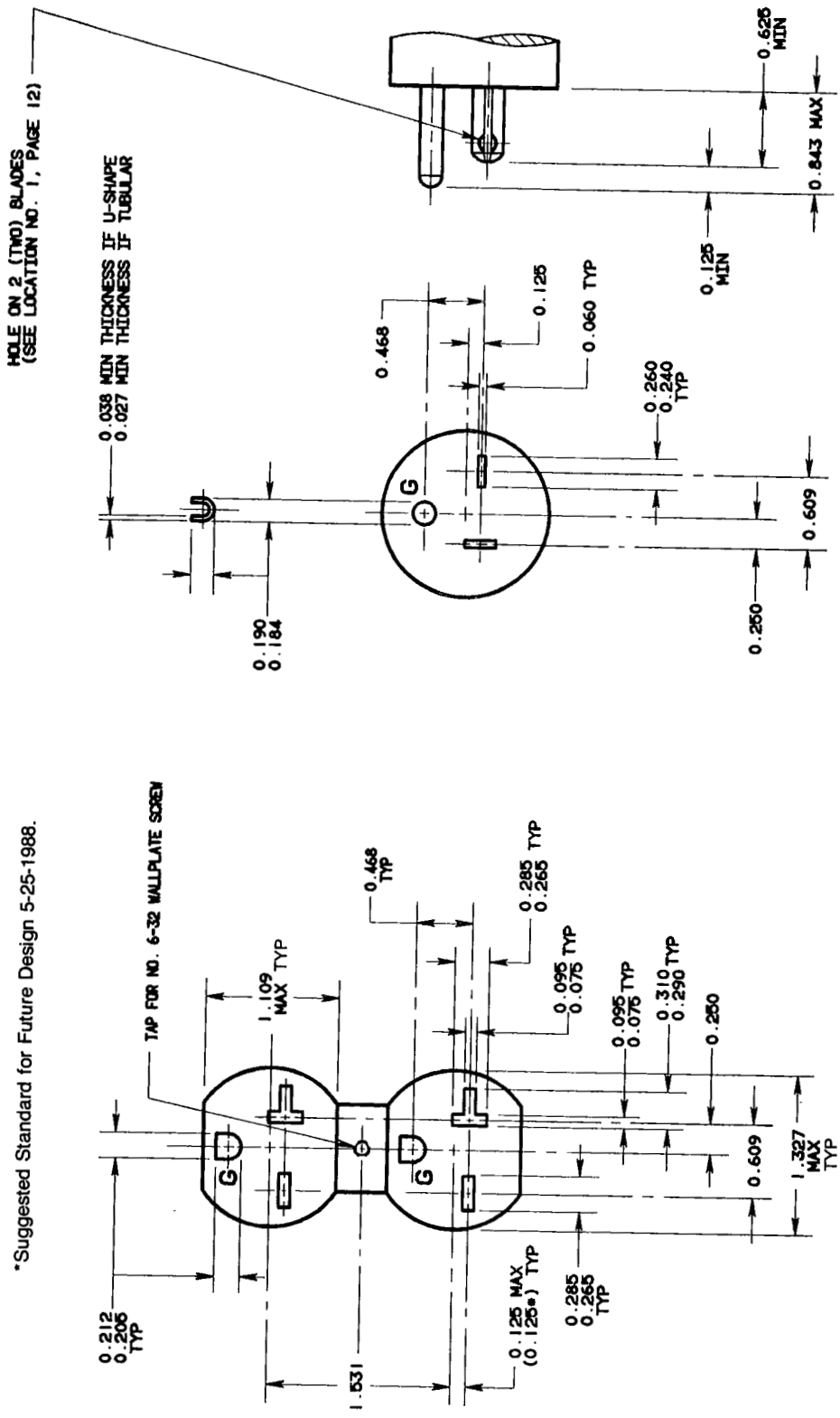

Figure 6-20
PLUG AND RECEPTACLE
250 volts, 20 amperes, 2 pole, 3 wire, grounding type
NEMA Standard 5-25-1988.

*Suggested Standard for Future Design 5-25-1988.

Copyright National Electrical Manufacturers Association
Provided by IHS under license with NEMA
No reproduction or networking permitted without license from IHS

Not for Resale

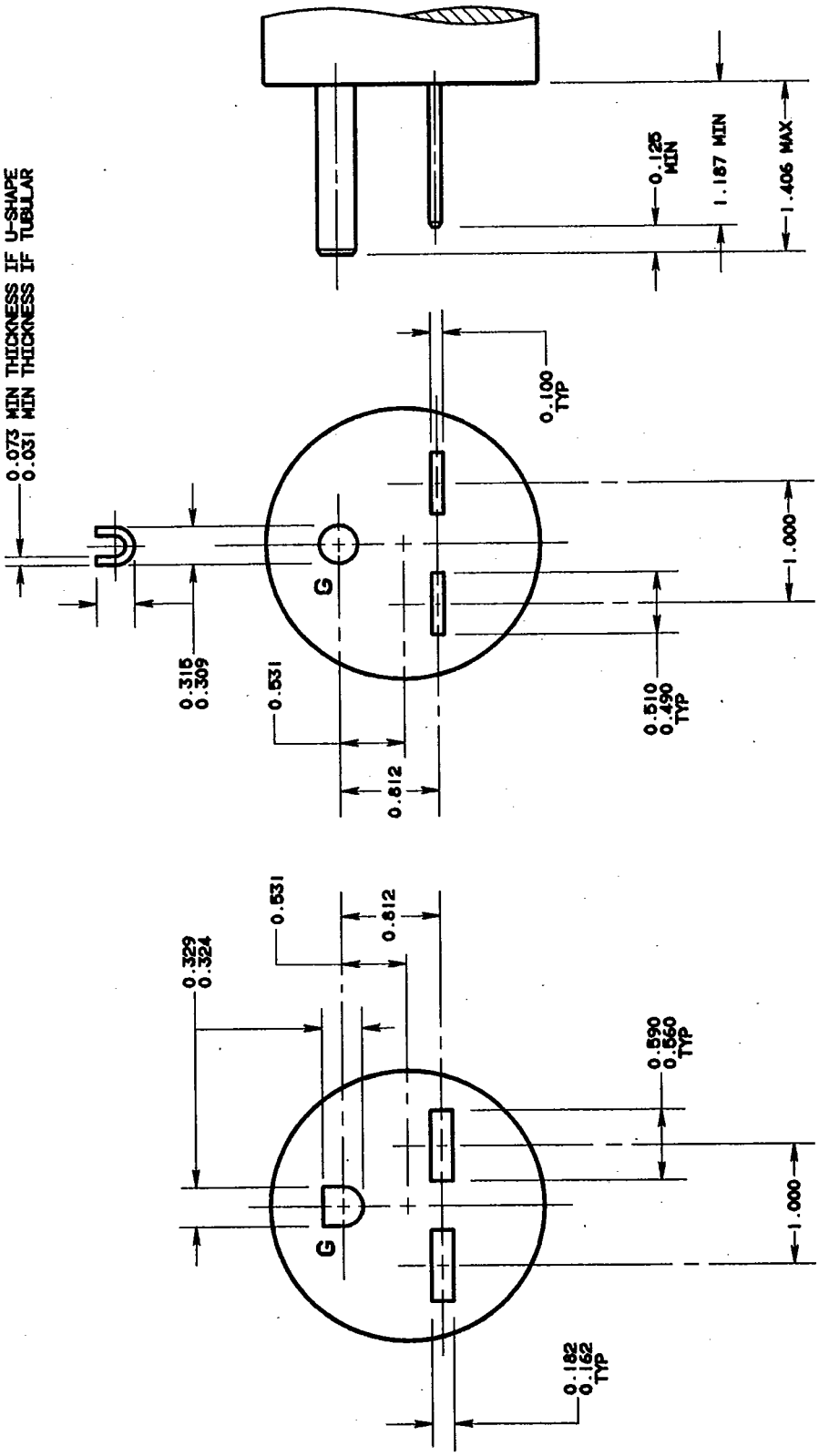

Figure 6-30
PLUG AND RECEPTACLE
250 volts, 30 amperes, 2 pole, 3 wire, grounding type
NEMA Standard 5-25-1988.

Copyright National Electrical Manufacturers Association
Provided by IHS under license with NEMA
No reproduction or networking permitted without license from IHS

Not for Resale

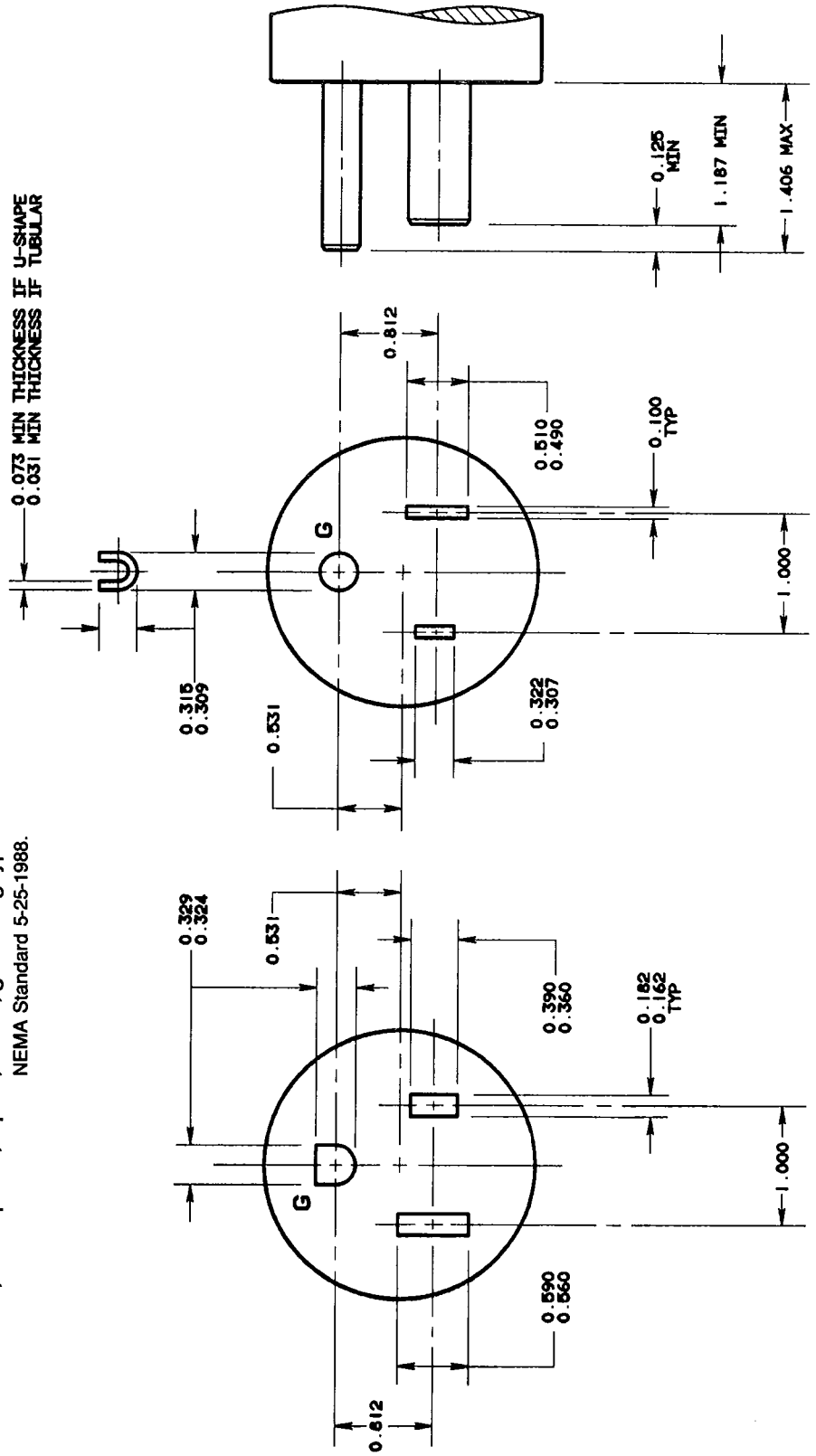

Figure 6-50
PLUG AND RECEPTACLE
250 volts, 50 amperes, 2 pole, 3 wire, grounding type
NEMA Standard 5-25-1988.

Copyright National Electrical Manufacturers Association
Provided by IHS under license with NEMA
No reproduction or networking permitted without license from IHS

Not for Resale

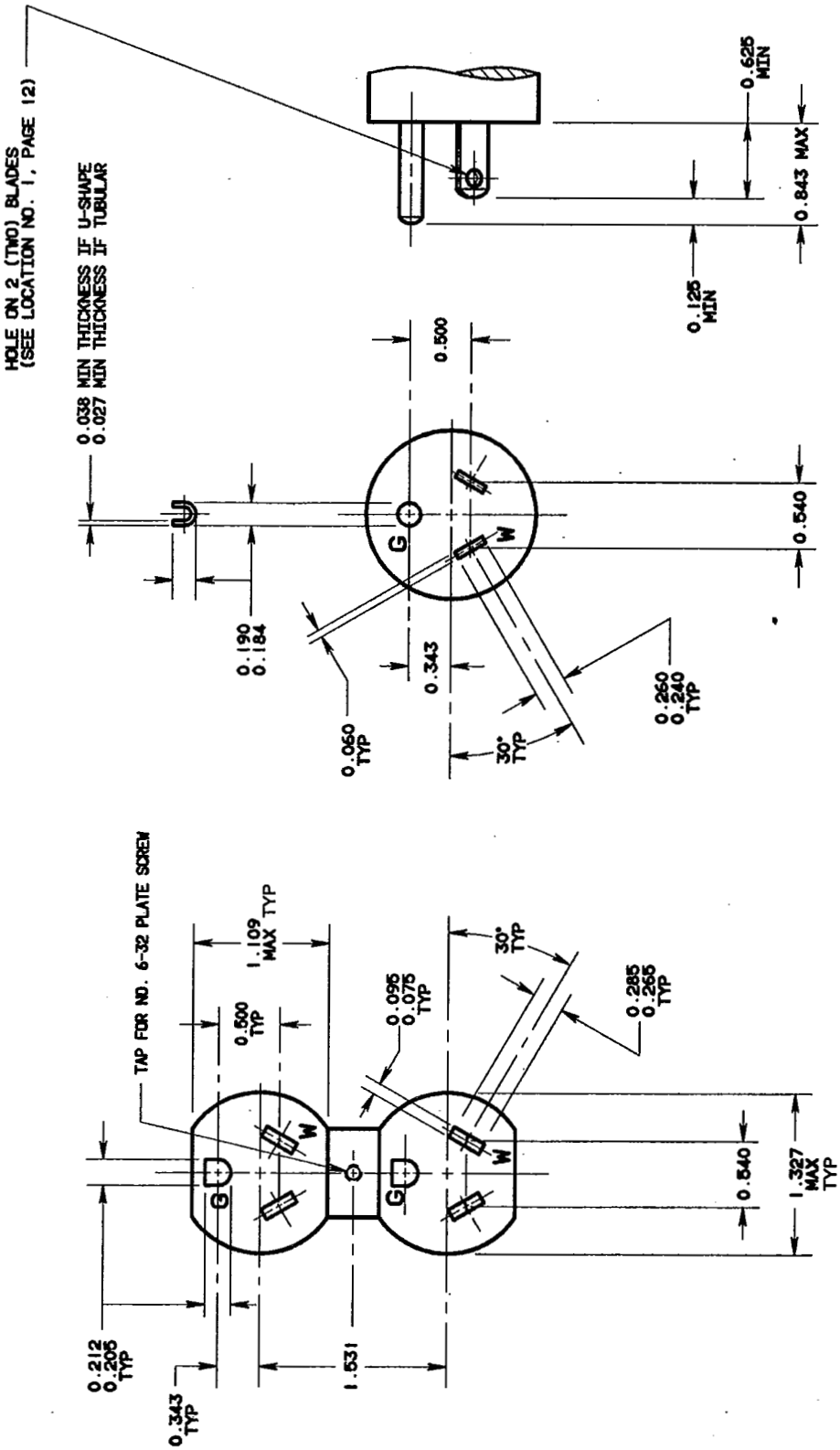

Figure 7-15
PLUG AND RECEPTACLE
277 volts ac, 15 amperes, 2 pole, 3 wire, grounding type

NEMA Standard 5-25-1988.

Copyright National Electrical Manufacturers Association
Provided by IHS under license with NEMA
No reproduction or networking permitted without license from IHS

Not for Resale

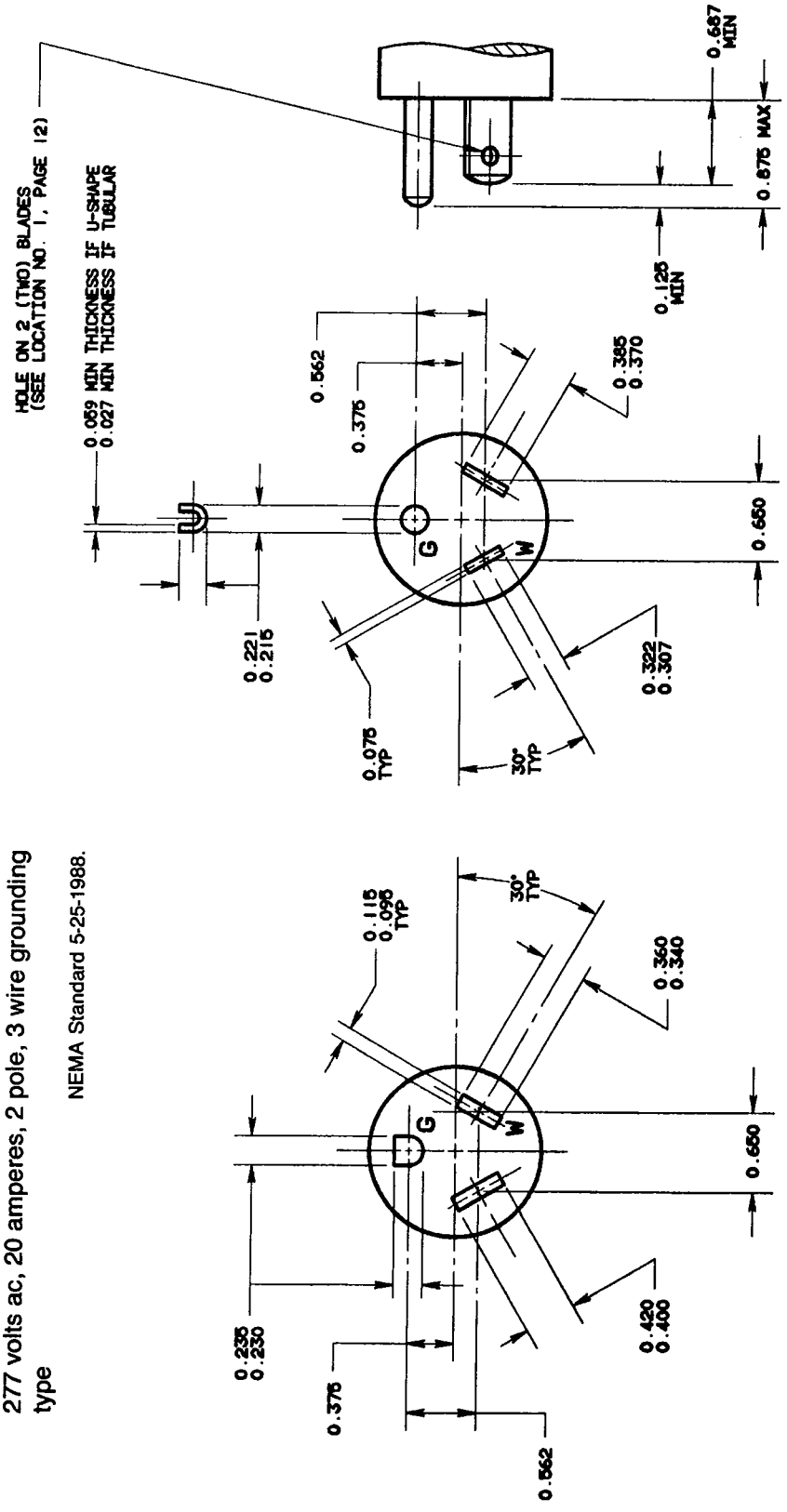

Figure 7-20
PLUG AND RECEPTACLE
277 volts ac, 20 amperes, 2 pole, 3 wire grounding type

NEMA Standard 5-25-1988.

Copyright National Electrical Manufacturers Association
Provided by IHS under license with NEMA
No reproduction or networking permitted without license from IHS

Not for Resale

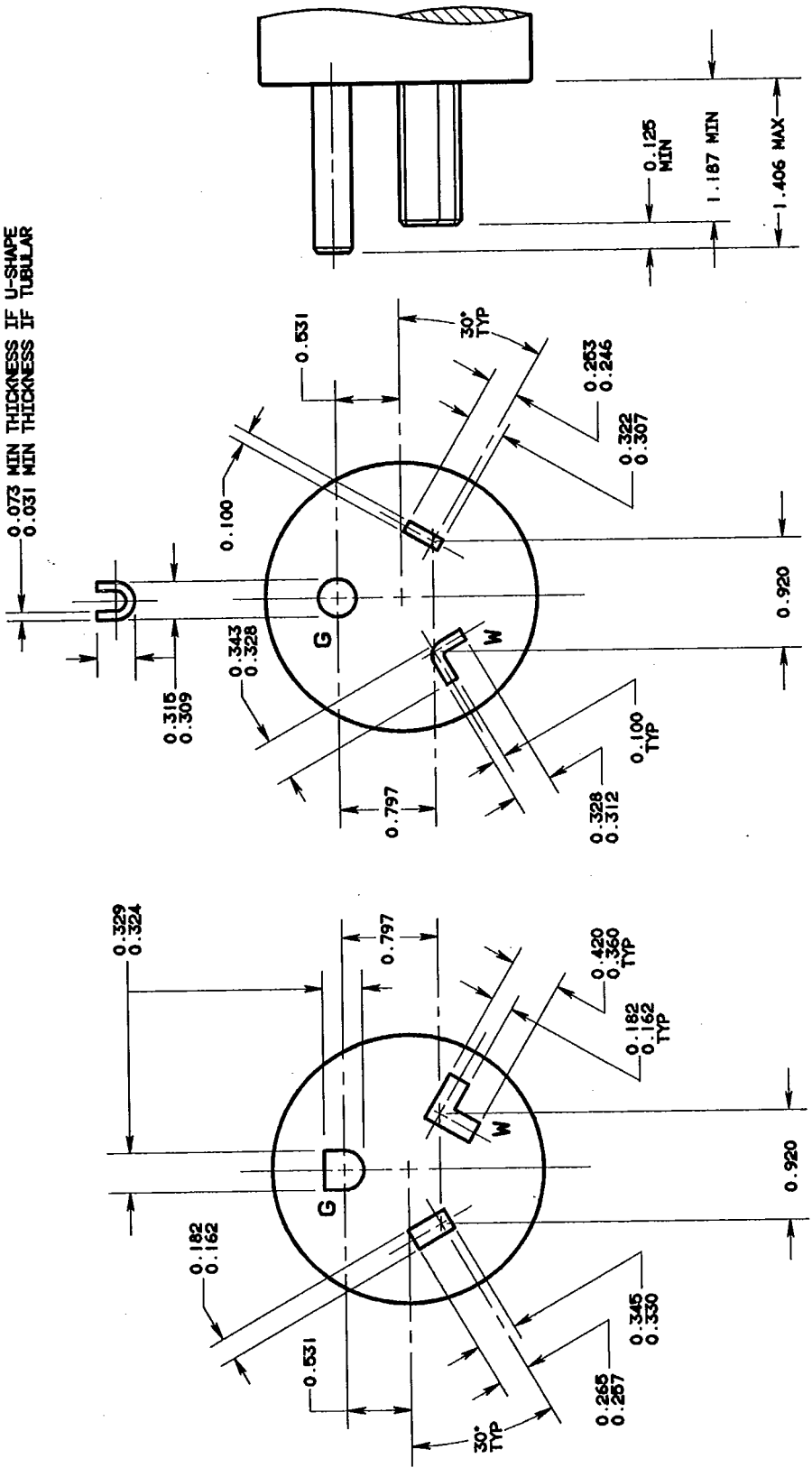

Figure 7-30
PLUG AND RECEPTACLE
277 volts ac, 30 amperes, 2 pole, 3 wire, grounding type

NEMA Standard 5-25-1988.

Copyright National Electrical Manufacturers Association
Provided by IHS under license with NEMA
No reproduction or networking permitted without license from IHS

Not for Resale

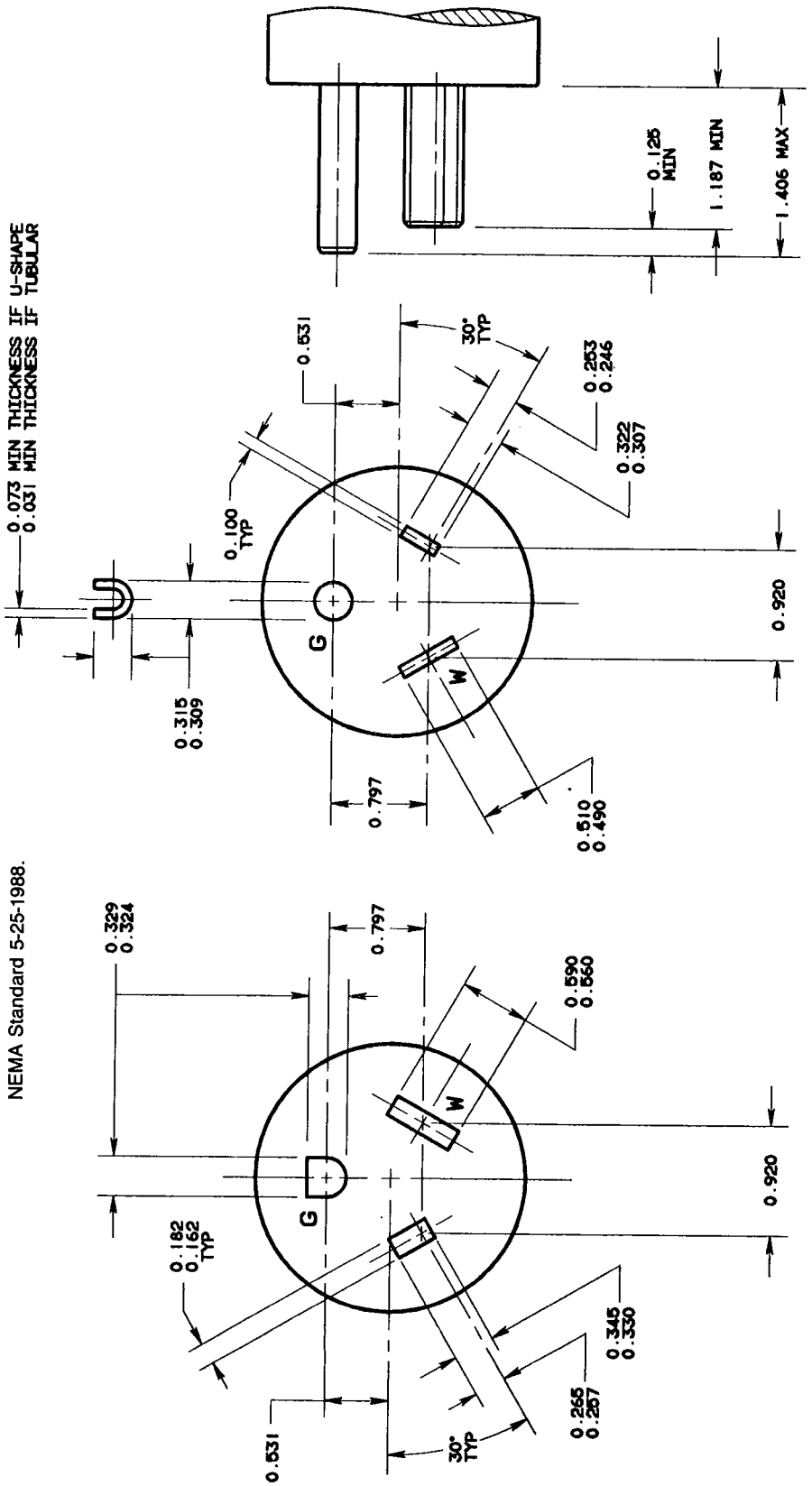

Figure 7-50
PLUG AND RECEPTACLE
277 volts ac, 50 amperes, 2 pole, 3 wire, grounding type

NEMA Standard 5-25-1988.

Copyright National Electrical Manufacturers Association
Provided by IHS under license with NEMA
No reproduction or networking permitted without license from IHS

Not for Resale

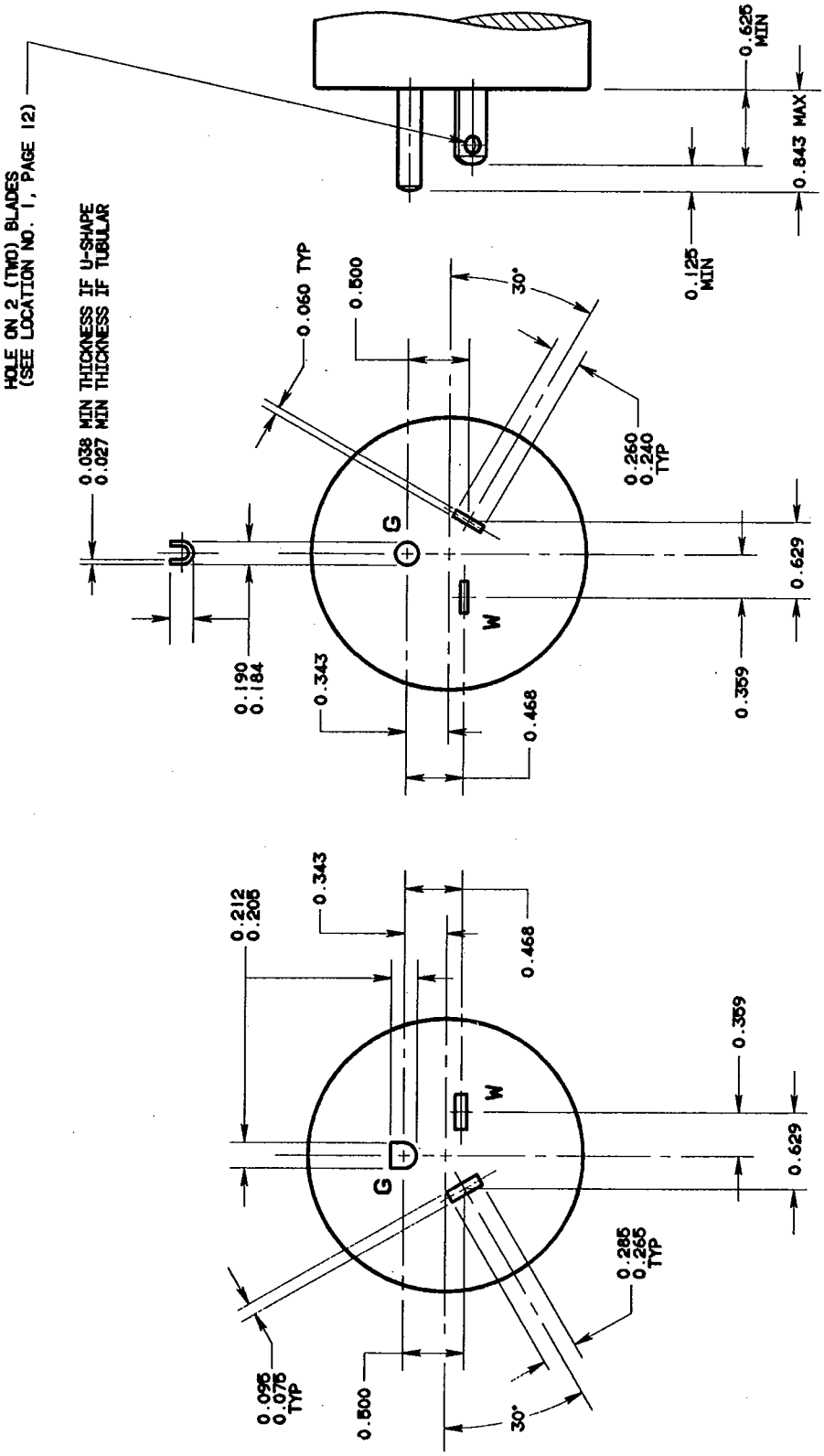

Figure 24-15
PLUG AND RECEPTACLE
347 volts ac, 15 amperes, 2 pole, 3 wire, grounding type

NEMA Standard 5-25-1988.

Copyright National Electrical Manufacturers Association
Provided by IHS under license with NEMA
No reproduction or networking permitted without license from IHS

Not for Resale

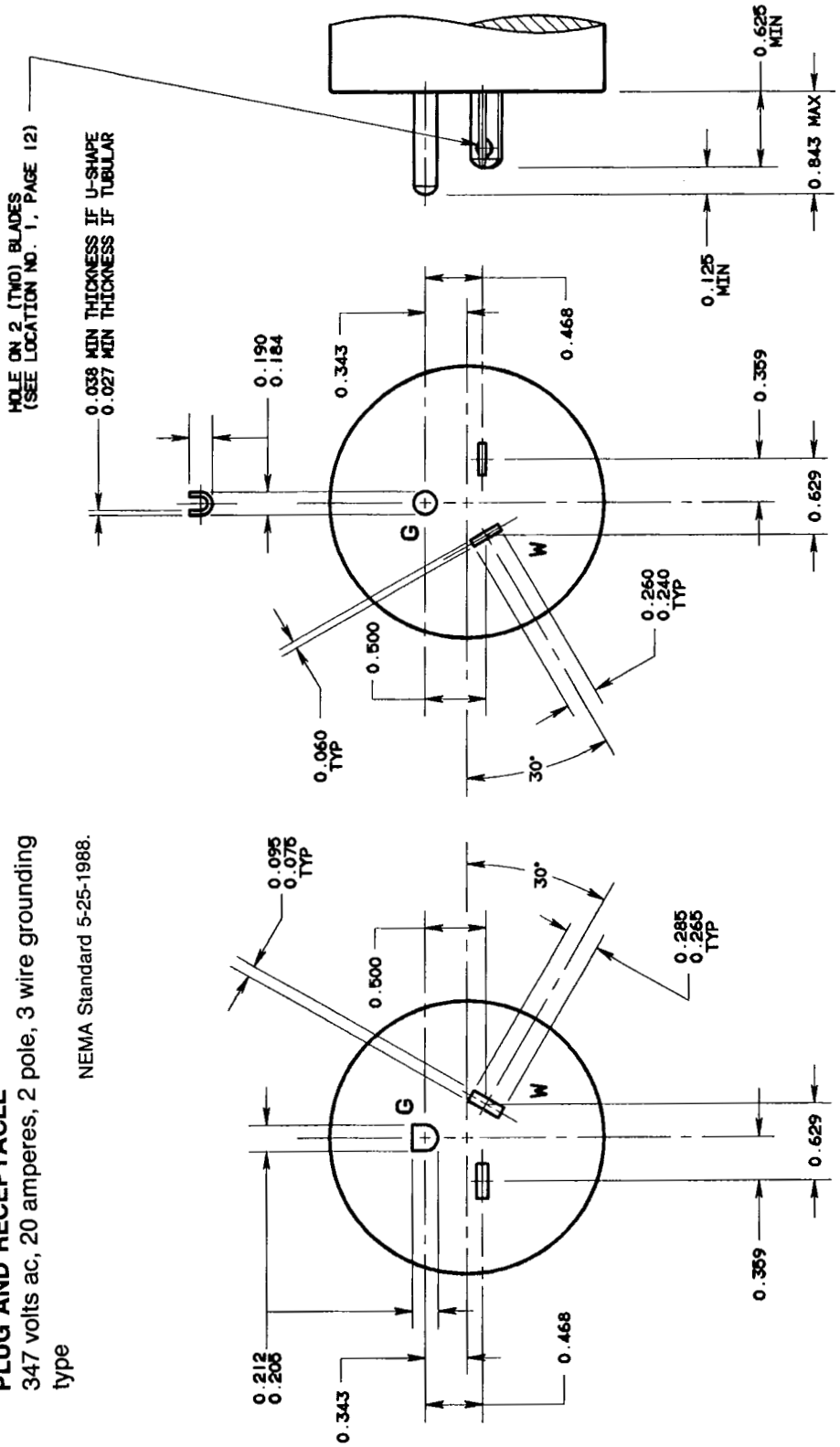

Figure 24-20
PLUG AND RECEPTACLE
347 volts ac, 20 amperes, 2 pole, 3 wire grounding type

NEMA Standard 5-25-1988.

Copyright National Electrical Manufacturers Association
Provided by IHS under license with NEMA
No reproduction or networking permitted without license from IHS

Not for Resale

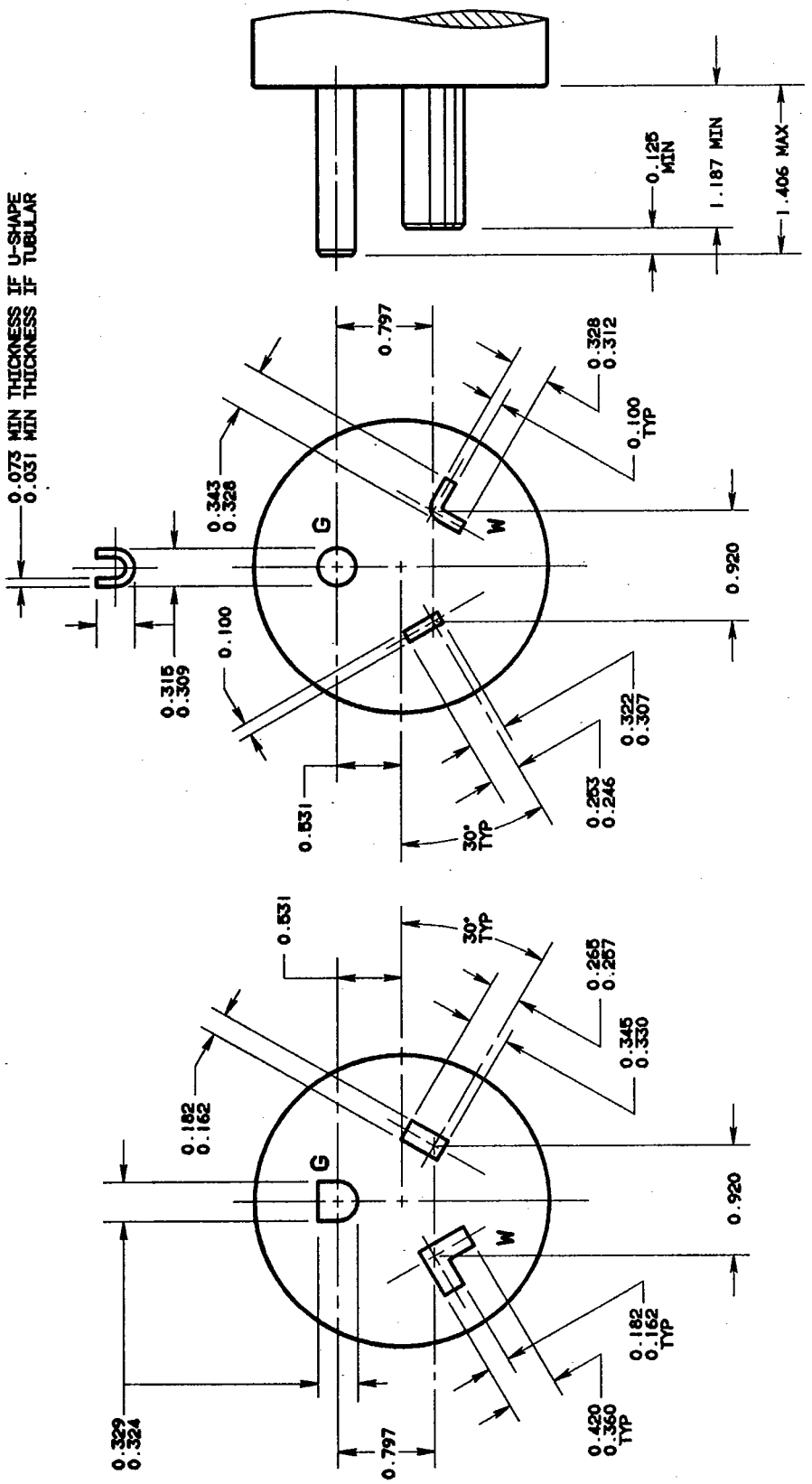

Figure 24-30
PLUG AND RECEPTACLE
347 volts ac, 30 amperes, 2 pole, 3 wire, grounding type

NEMA Standard 5-25-1988.

Copyright National Electrical Manufacturers Association
Provided by IHS under license with NEMA
No reproduction or networking permitted without license from IHS

Not for Resale

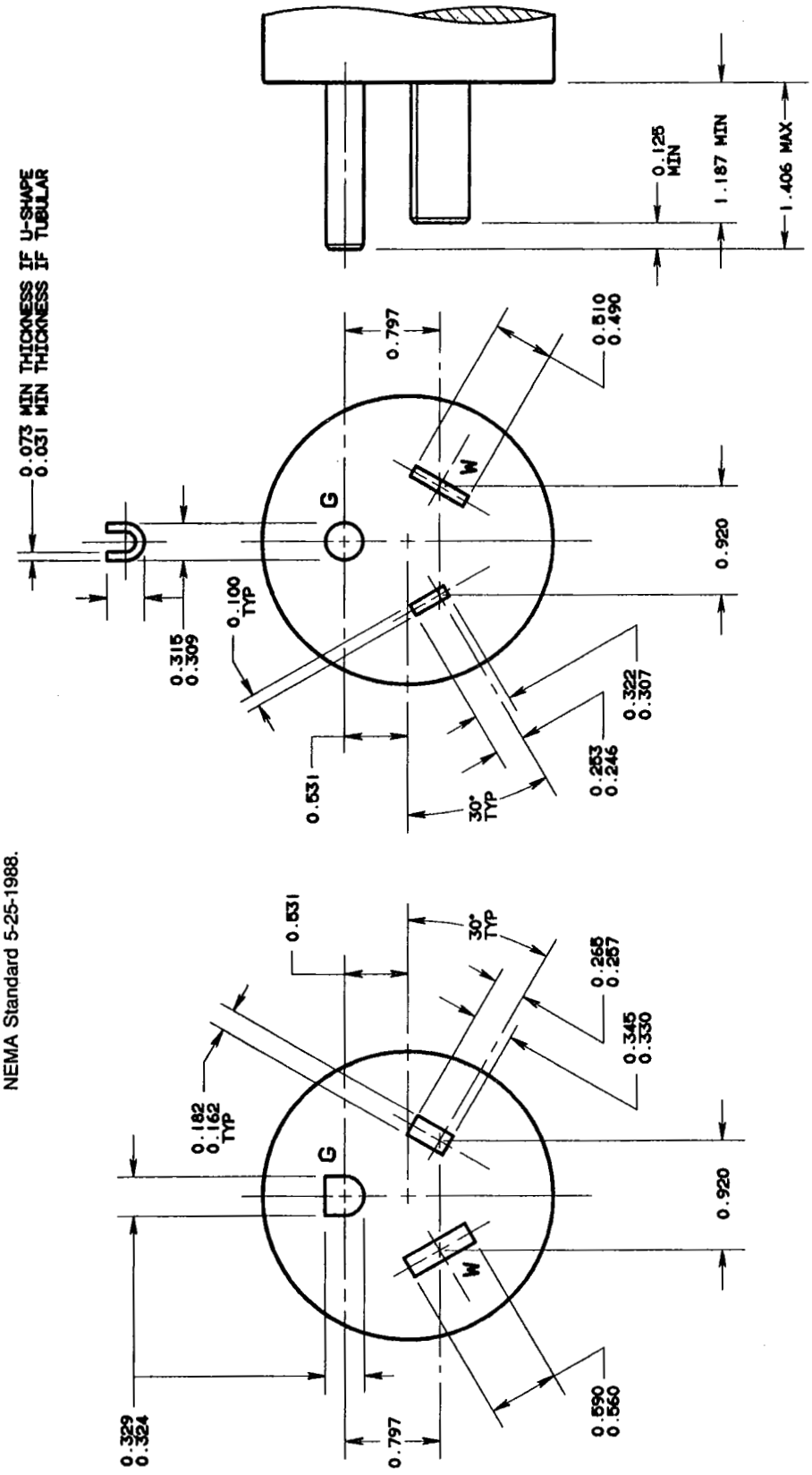

Figure 24-50
PLUG AND RECEPTACLE
347 volts ac, 50 amperes, 2 pole, 3 wire, grounding type

NEMA Standard 5-25-1988.

Copyright National Electrical Manufacturers Association
Provided by IHS under license with NEMA
No reproduction or networking permitted without license from IHS

Not for Resale

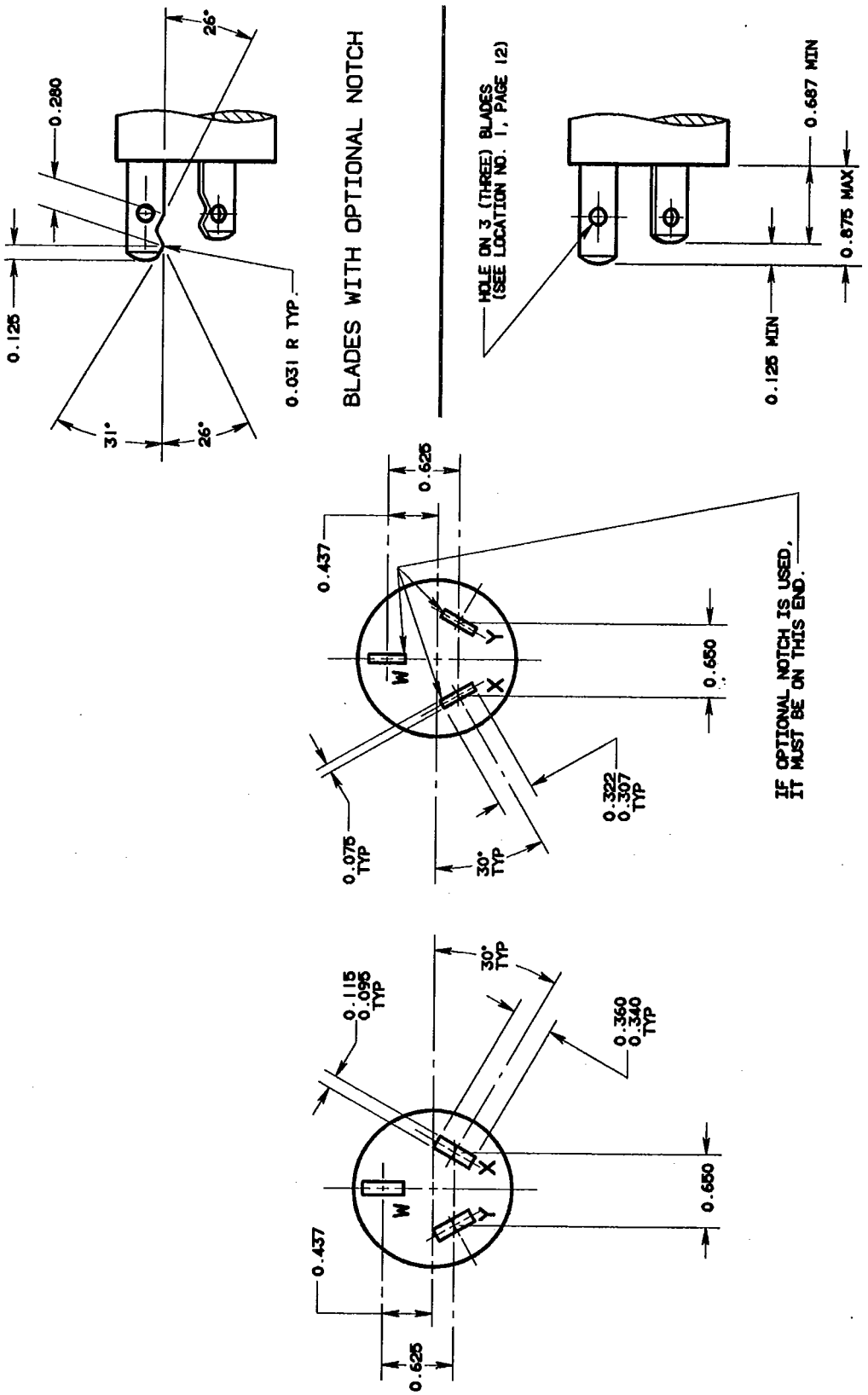

Figure 10-20
PLUG AND RECEPTACLE
125/250 volts, 20 amperes, 3 pole, 3 wire
NEMA Standard 5-25-1988.

Copyright National Electrical Manufacturers Association
Provided by IHS under license with NEMA
No reproduction or networking permitted without license from IHS

Not for Resale

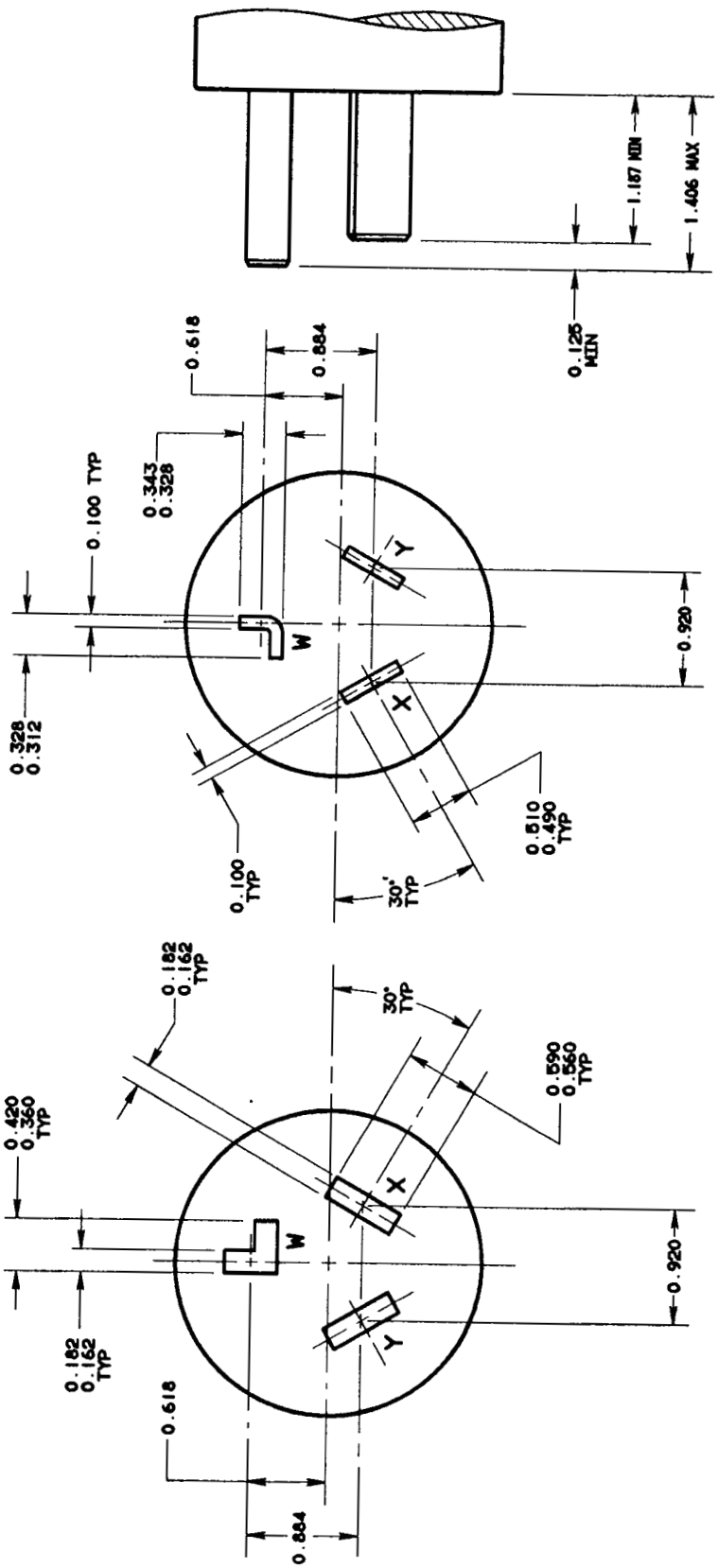

Figure 10-30
PLUG AND RECEPTACLE
125/250 volts, 30 amperes, 3 pole, 3 wire
NEMA Standard 5-25-1988.

Copyright National Electrical Manufacturers Association
Provided by IHS under license with NEMA
No reproduction or networking permitted without license from IHS

Not for Resale

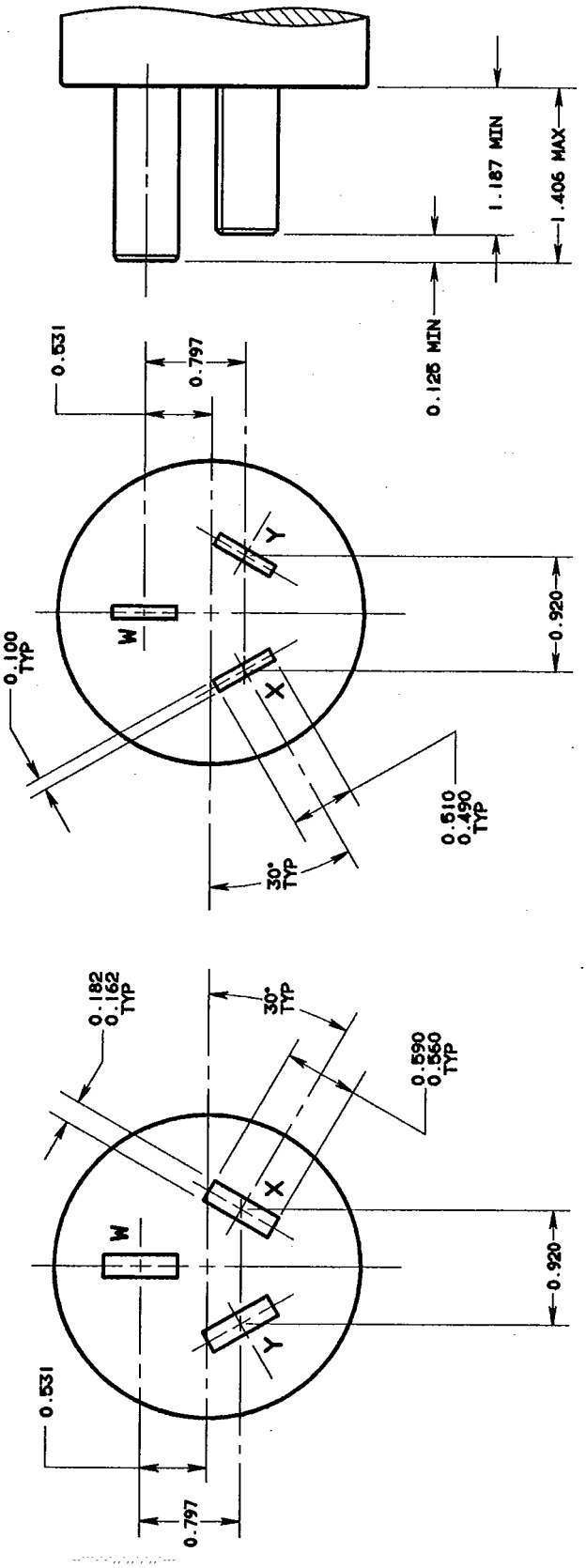

Figure 10-50
PLUG AND RECEPTACLE
125/250 volts, 50 amperes, 3 pole, 3 wire
NEMA Standard 5-25-1988.

Copyright National Electrical Manufacturers Association
Provided by IHS under license with NEMA
No reproduction or networking permitted without license from IHS

Not for Resale

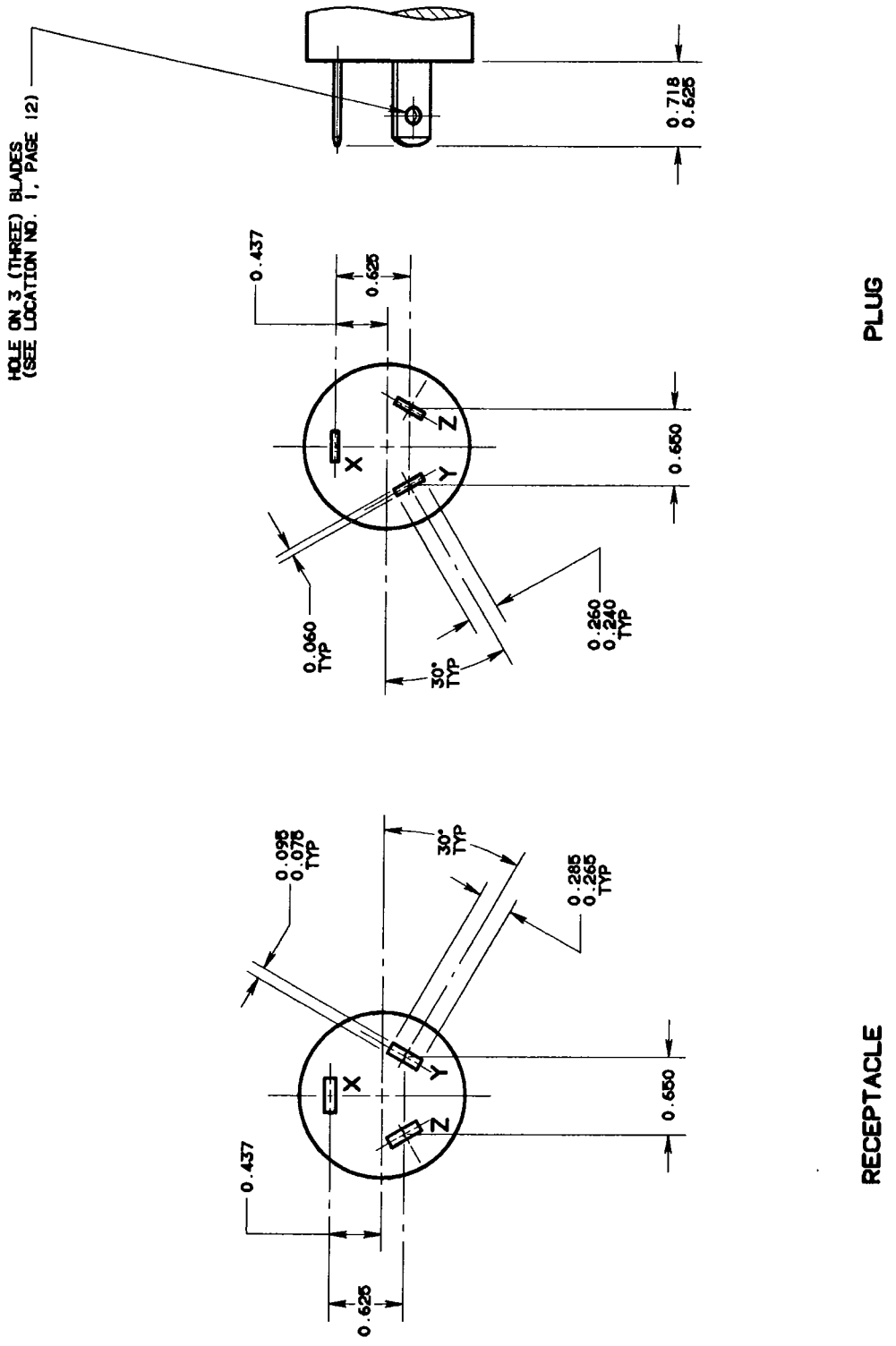

Figure 11-15
PLUG AND RECEPTACLE
250 volts, 15 amperes, 3 phase, 3 pole, 3 wire
NEMA Standard 5-25-1988.

Copyright National Electrical Manufacturers Association
Provided by IHS under license with NEMA
No reproduction or networking permitted without license from IHS
Not for Resale

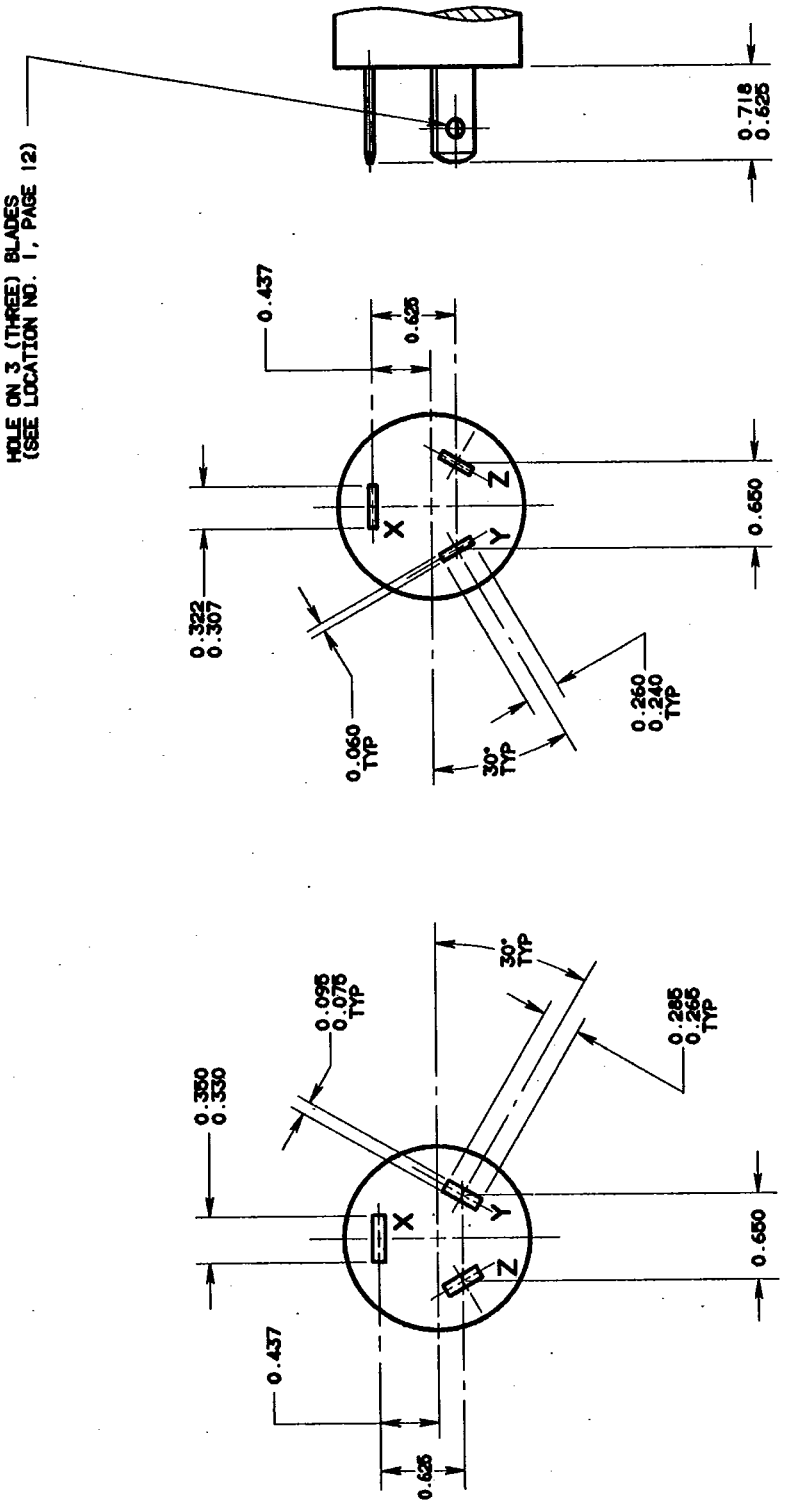

Figure 11-20
PLUG AND RECEPTACLE
250 volts, 20 amperes, 3 phase, 3 pole, 3 wire
NEMA Standard 5-25-1988.

Copyright National Electrical Manufacturers Association
Provided by IHS under license with NEMA
No reproduction or networking permitted without license from IHS

Not for Resale

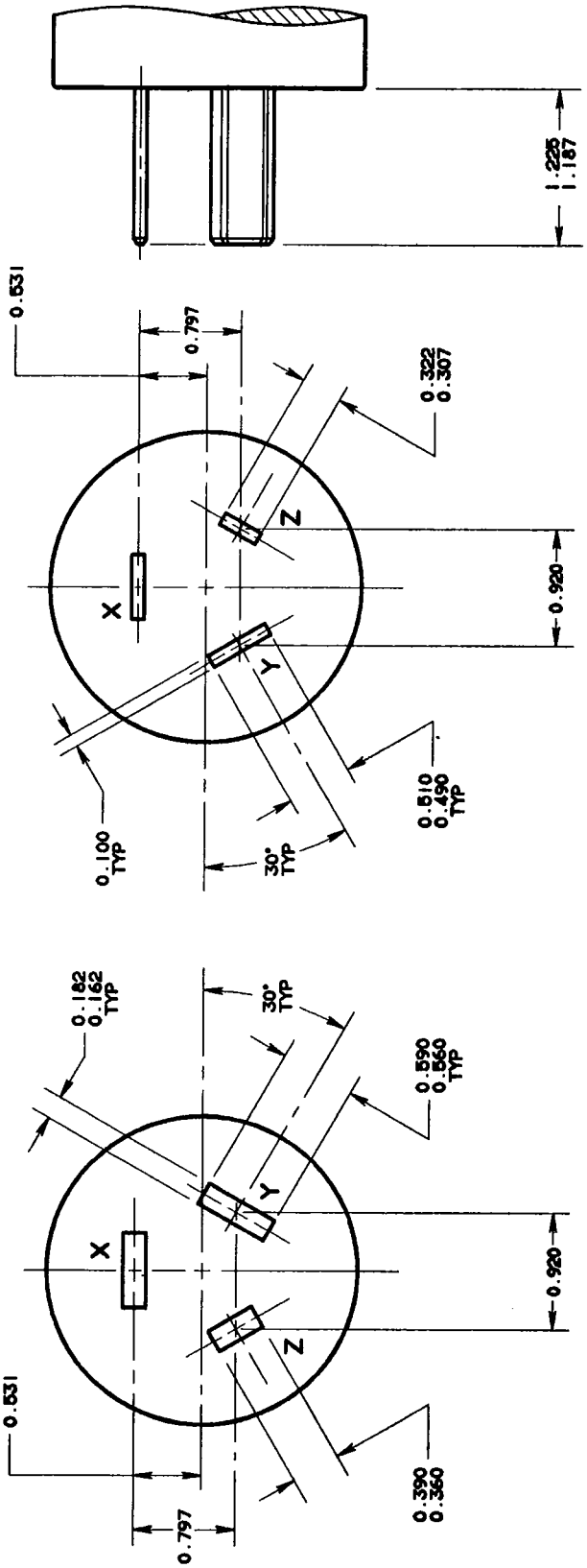

Figure 11-30
PLUG AND RECEPTACLE
250 volts, 30 amperes, 3 phase, 3 pole, 3 wire
NEMA Standard 5-25-1988.

Copyright National Electrical Manufacturers Association
Provided by IHS under license with NEMA
No reproduction or networking permitted without license from IHS

Not for Resale

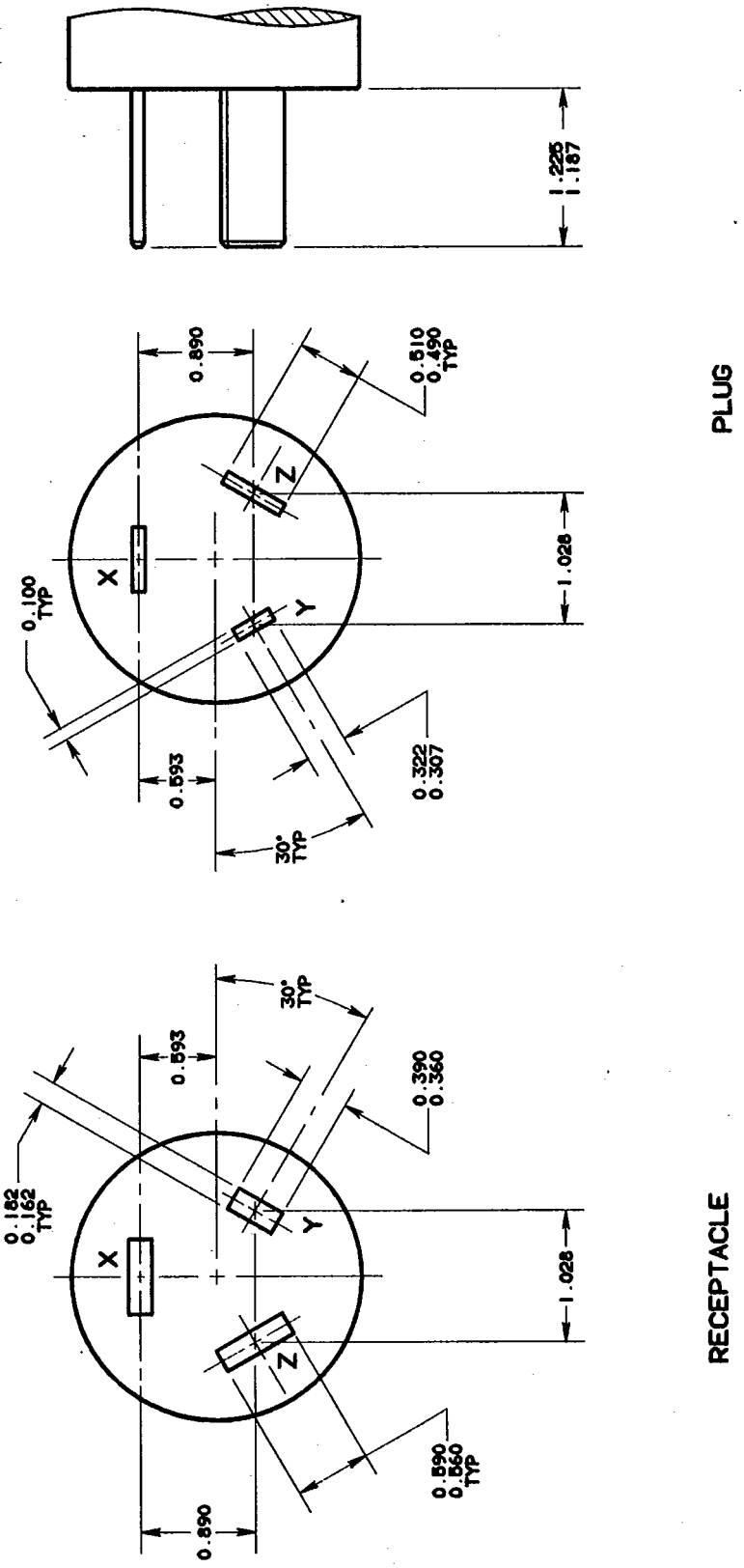

Figure 11-50
PLUG AND RECEPTACLE
250 volts, 50 amperes, 3 phase, 3 pole, 3 wire
NEMA Standard 5-25-1988.

Copyright National Electrical Manufacturers Association
Provided by IHS under license with NEMA
No reproduction or networking permitted without license from IHS

Not for Resale

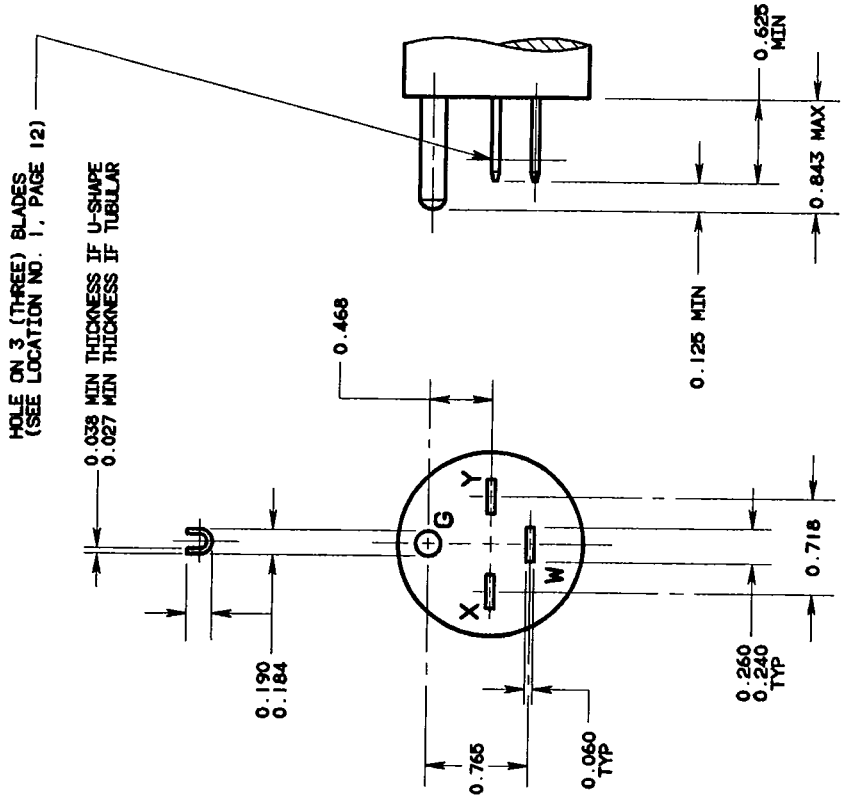

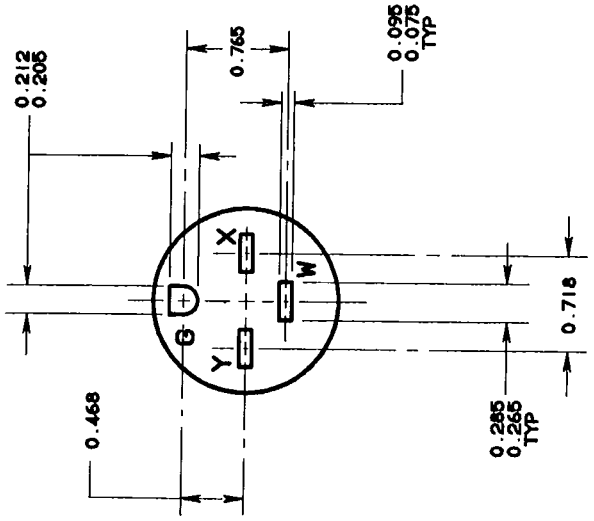

Figure 14-15
PLUG AND RECEPTACLE
125/250 volts, 15 amperes, 3 pole, 4 wire, grounding
NEMA Standard 5-25-1988.

Copyright National Electrical Manufacturers Association
Provided by IHS under license with NEMA
No reproduction or networking permitted without license from IHS

Not for Resale

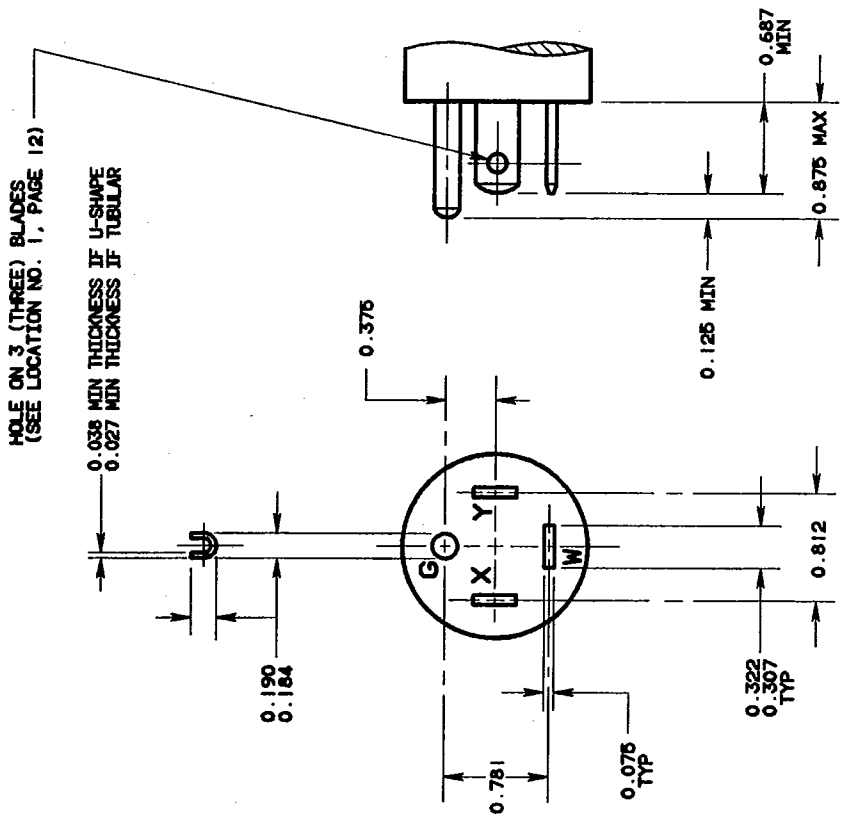

PLUG

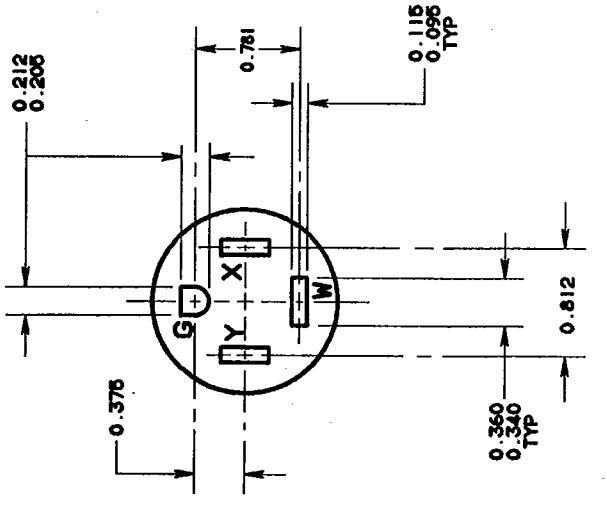

RECEPTACLE

Figure 14-20
PLUG AND RECEPTACLE
125/250 volts, 20 amperes, 3 pole, 4 wire, grounding type

NEMA Standard 5-25-1988.

Copyright National Electrical Manufacturers Association
Provided by IHS under license with NEMA
No reproduction or networking permitted without license from IHS

Not for Resale

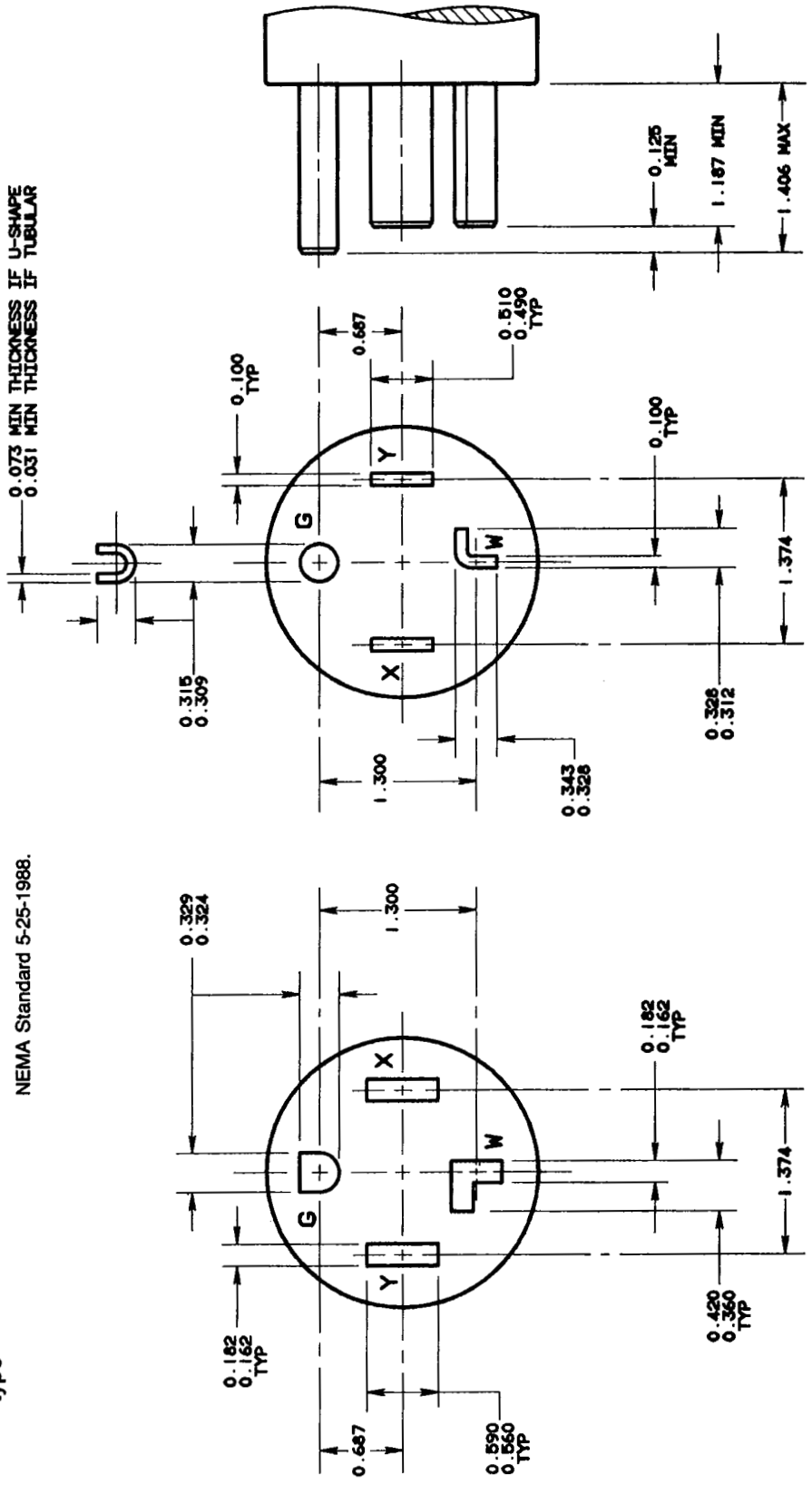

Figure 14-30
PLUG AND RECEPTACLE
125/250 volts, 30 amperes, 3 pole, 4 wire, grounding type

NEMA Standard 5-25-1988.

Copyright National Electrical Manufacturers Association
Provided by IHS under license with NEMA
No reproduction or networking permitted without license from IHS

Not for Resale

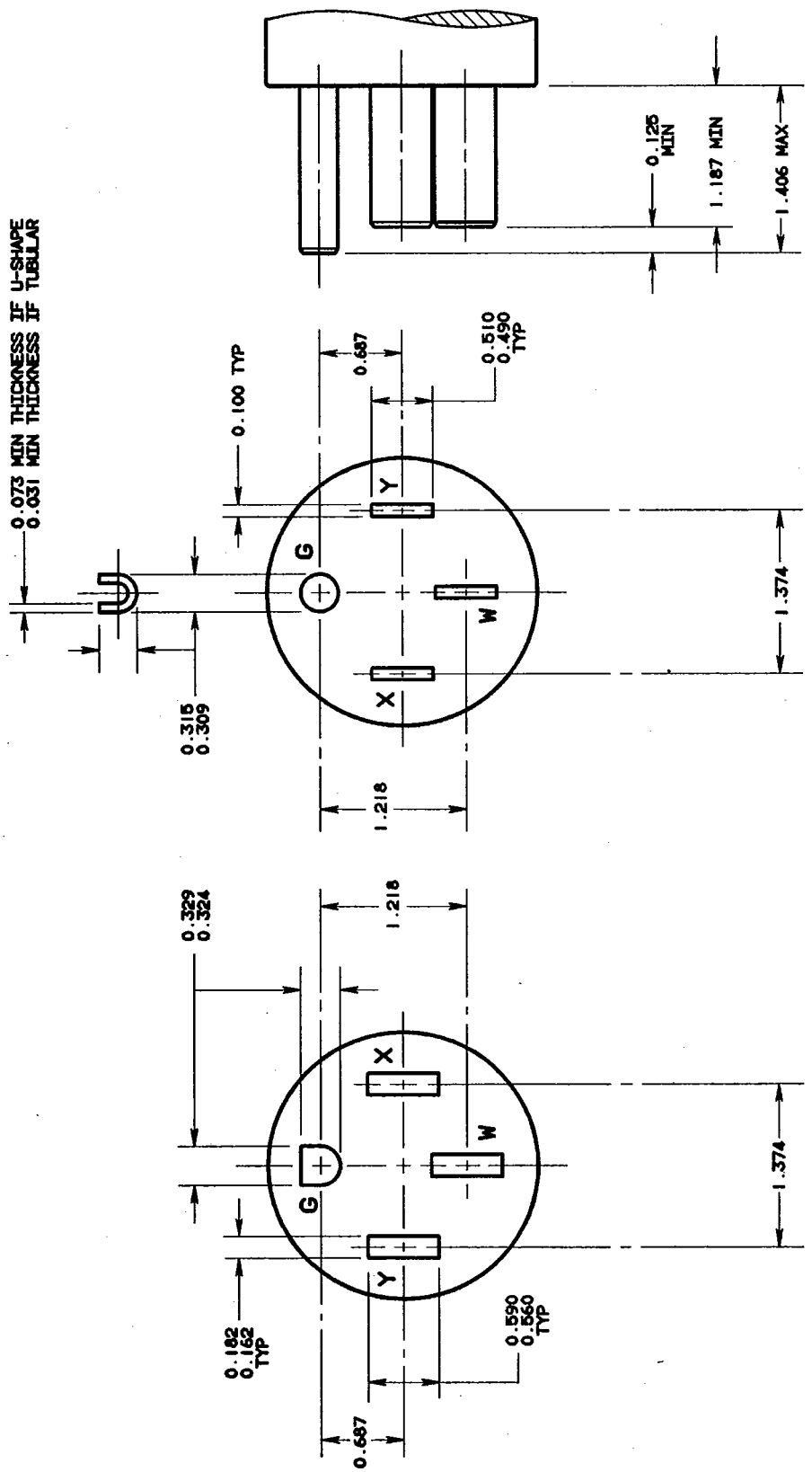

Figure 14-50
PLUG AND RECEPTACLE
125/250 volts, 50 amperes, 3 pole, 4 wire, grounding type

NEMA Standard 5-25-1988.

Copyright National Electrical Manufacturers Association
Provided by IHS under license with NEMA
No reproduction or networking permitted without license from IHS

Not for Resale

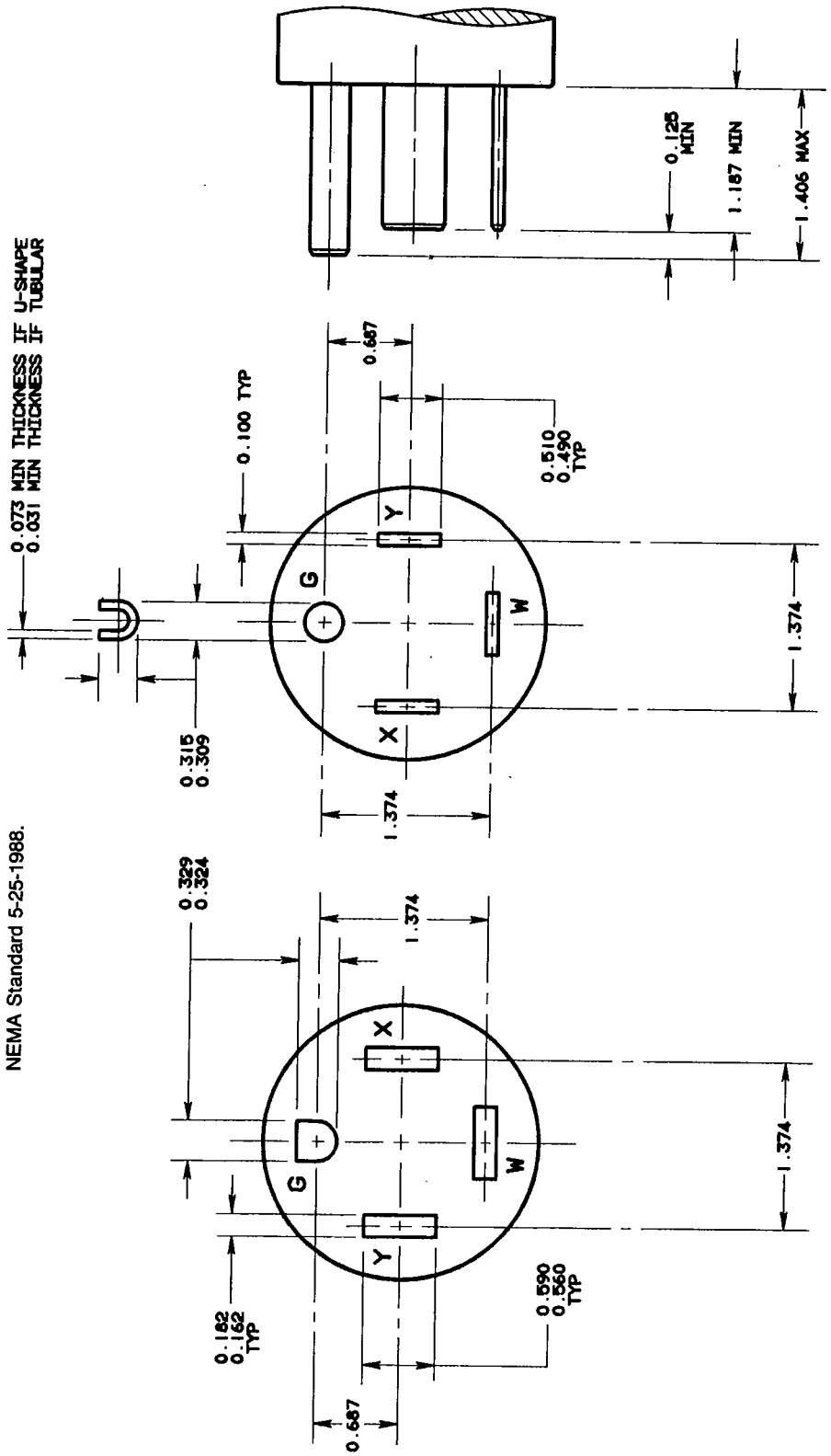

Figure 14-60
PLUG AND RECEPTACLE
125/250 volts, 60 amperes, 3 pole, 4 wire, grounding type

NEMA Standard 5-25-1988.

Copyright National Electrical Manufacturers Association
Provided by IHS under license with NEMA
No reproduction or networking permitted without license from IHS

Not for Resale

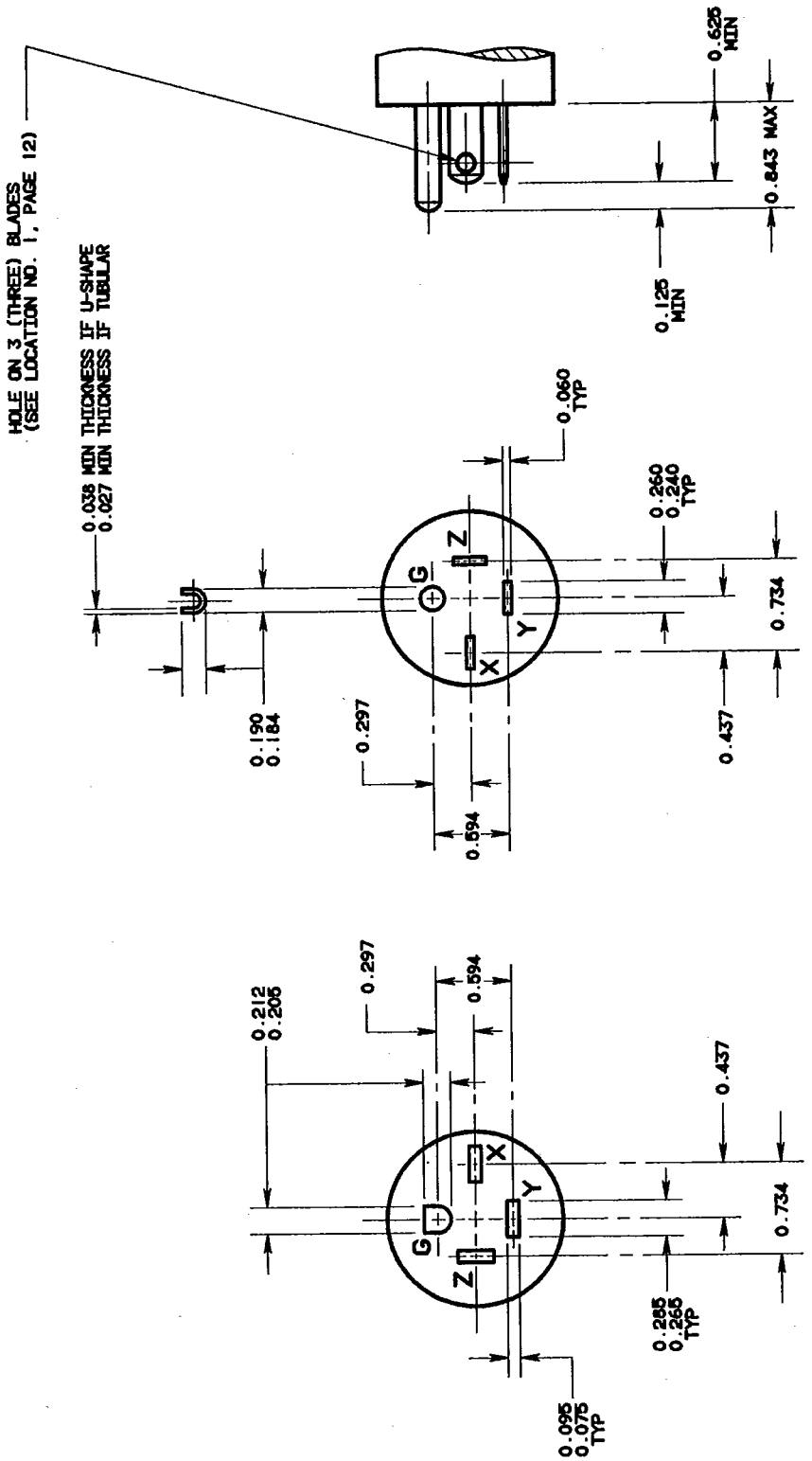

Figure 15-15
PLUG AND RECEPTACLE
250 volts, 15 amperes, 3 phase, 3 pole, 4 wire, grounding type

NEMA Standard 5-25-1988.

Copyright National Electrical Manufacturers Association
Provided by IHS under license with NEMA
No reproduction or networking permitted without license from IHS

Not for Resale

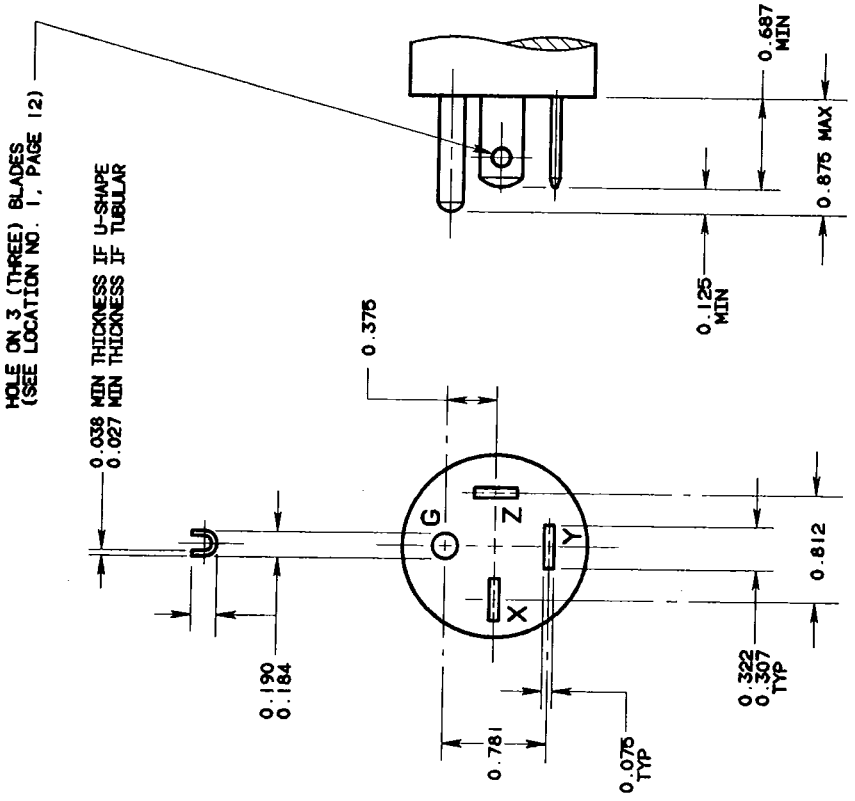

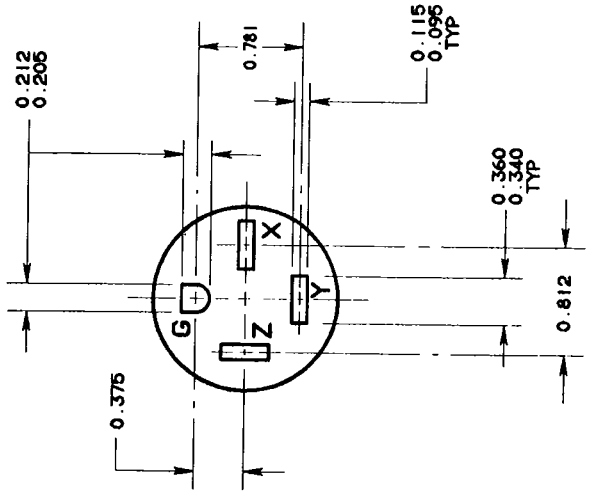

Figure 15-20
PLUG AND RECEPTACLE
250 volts, 20 amperes, 3 phase, 3 pole, 4 wire, grounding type

NEMA Standard 5-25-1988.

Copyright National Electrical Manufacturers Association
Provided by IHS under license with NEMA
No reproduction or networking permitted without license from IHS

Not for Resale

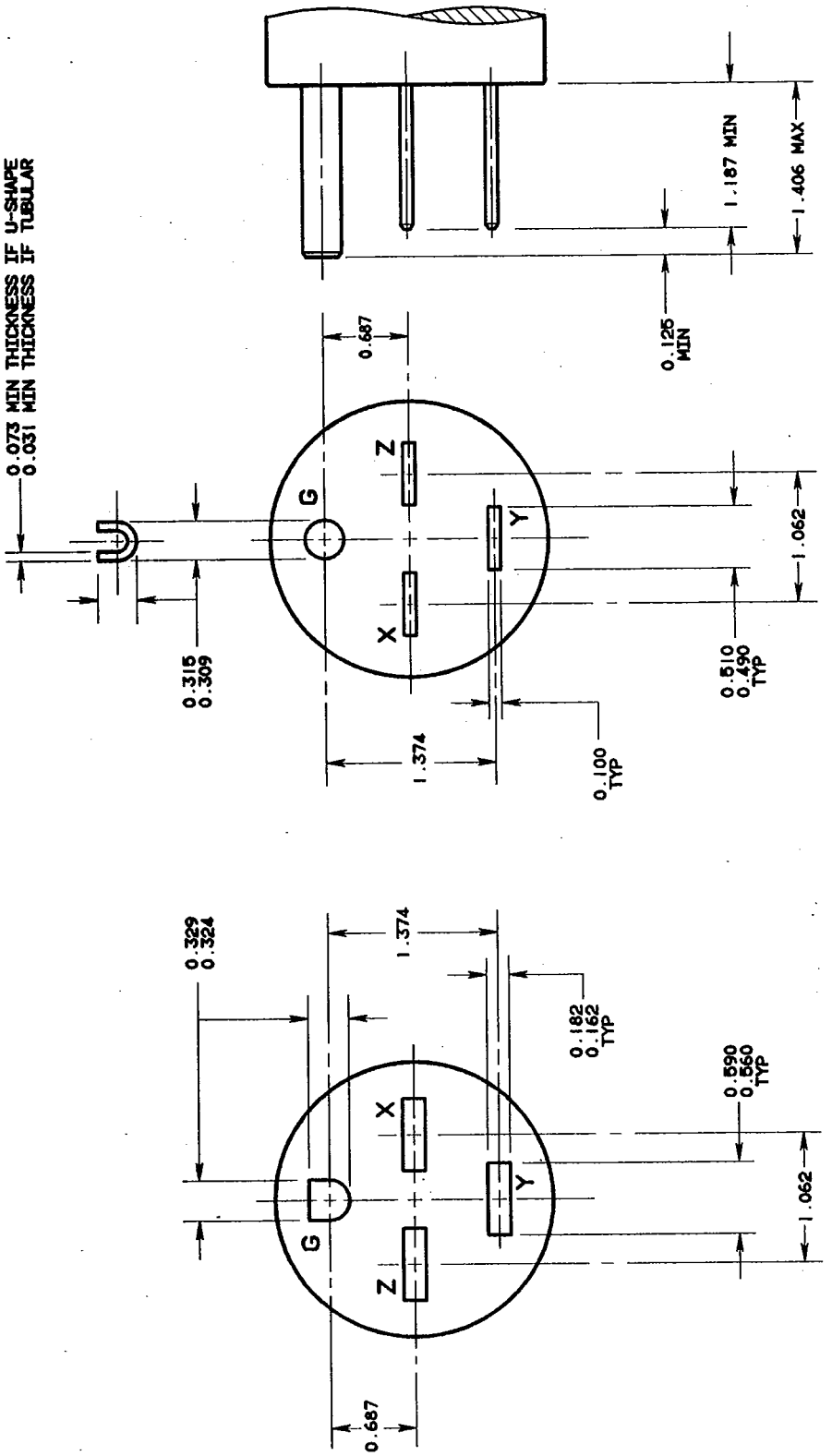

Figure 15-30
PLUG AND RECEPTACLE
250 volts, 30 amperes, 3 phase, 3 pole, 4 wire, grounding type

NEMA Standard 5-25-1988.

Copyright National Electrical Manufacturers Association
Provided by IHS under license with NEMA
No reproduction or networking permitted without license from IHS

Not for Resale

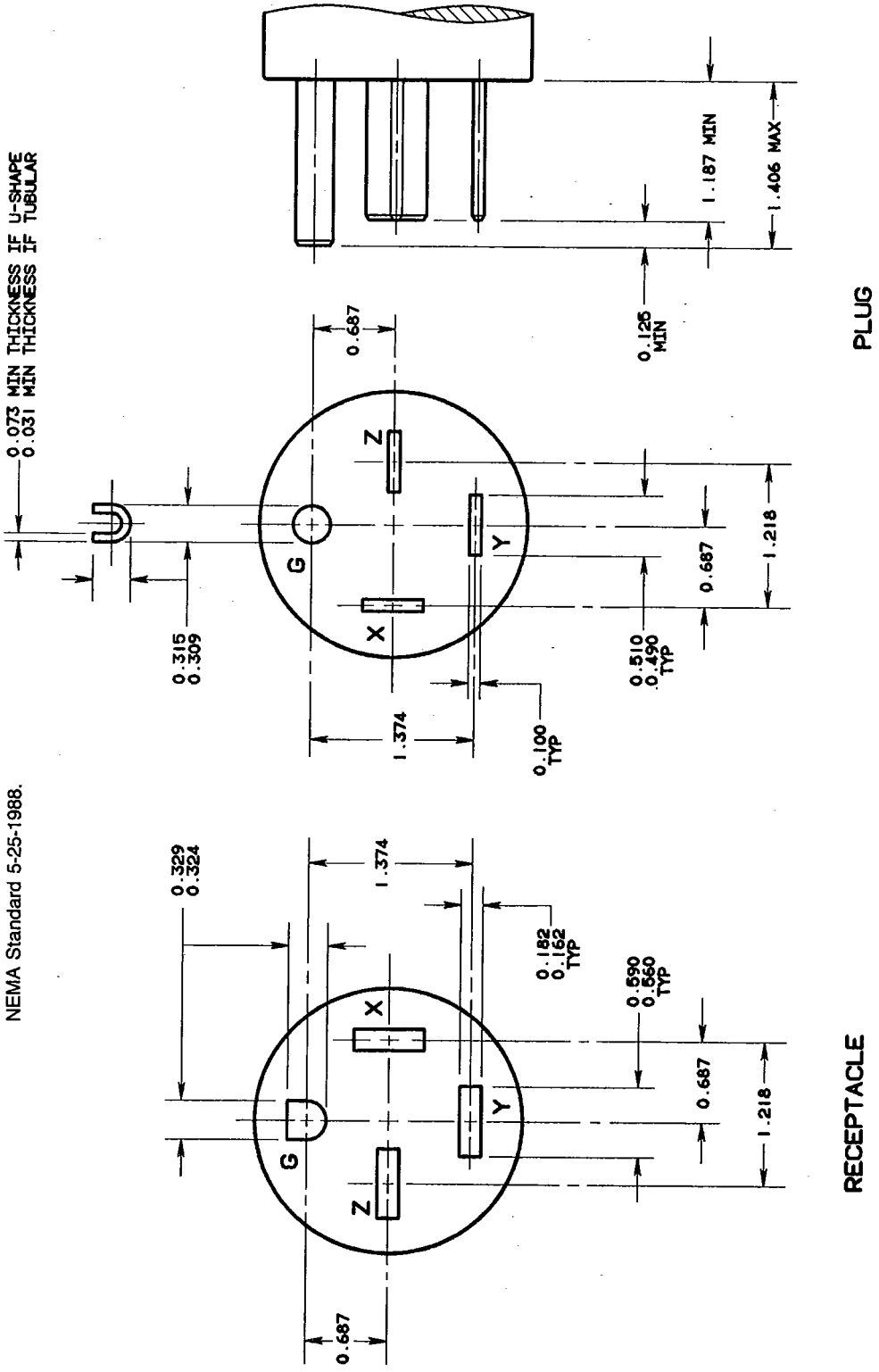

Figure 15-50.
PLUG AND RECEPTACLE
250 volts, 50 amperes, 3 phase, 3 pole, 4 wire, grounding type

NEMA Standard 5-25-1988.

Copyright National Electrical Manufacturers Association
Provided by IHS under license with NEMA
No reproduction or networking permitted without license from IHS

Not for Resale

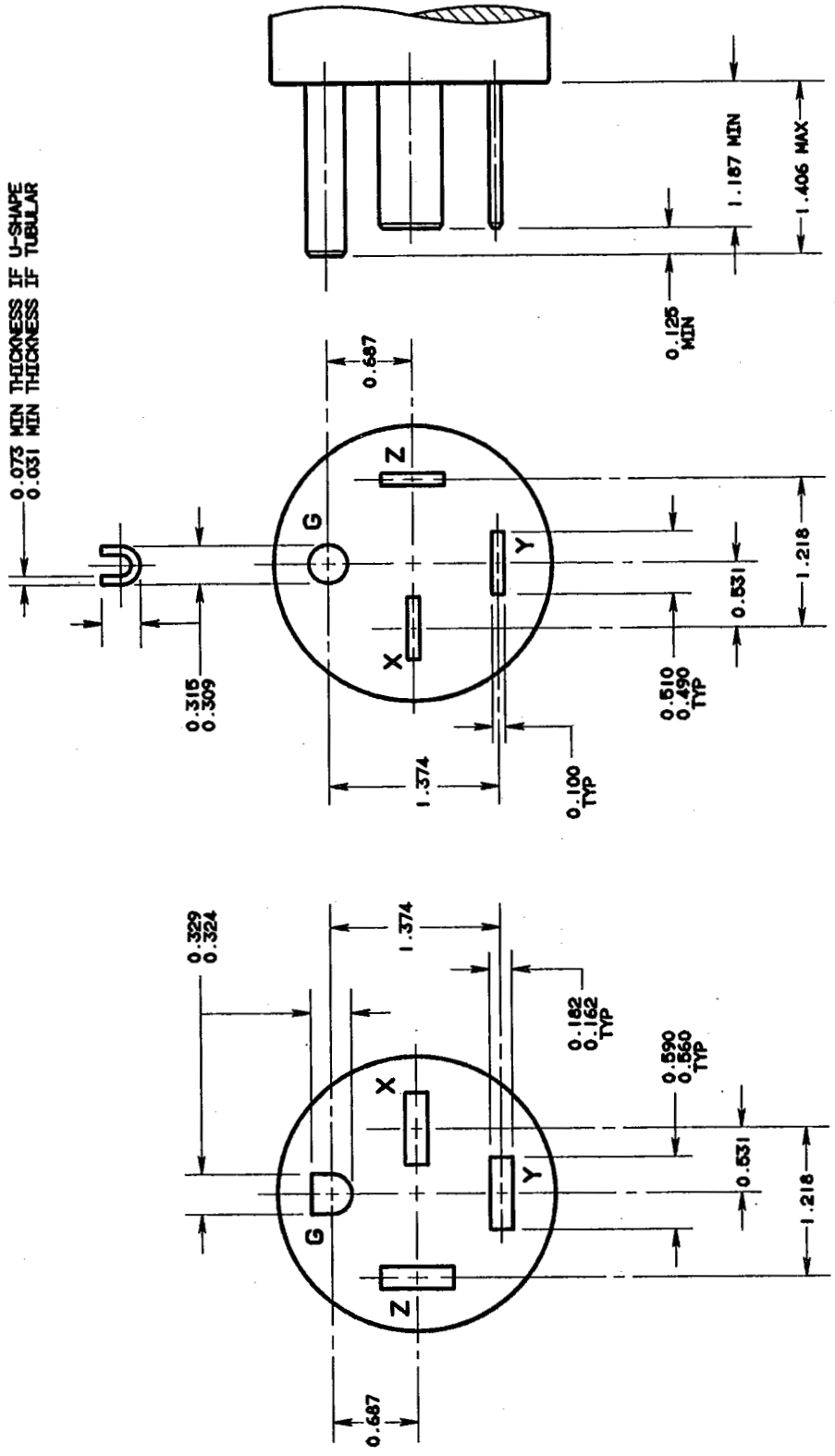

Figure 15-60
PLUG AND RECEPTACLE
250 volts, 60 amperes, 3 phase, 3 pole, 4 wire, grounding type

NEMA Standard 5-25-1988.

Copyright National Electrical Manufacturers Association
Provided by IHS under license with NEMA
No reproduction or networking permitted without license from IHS

Not for Resale

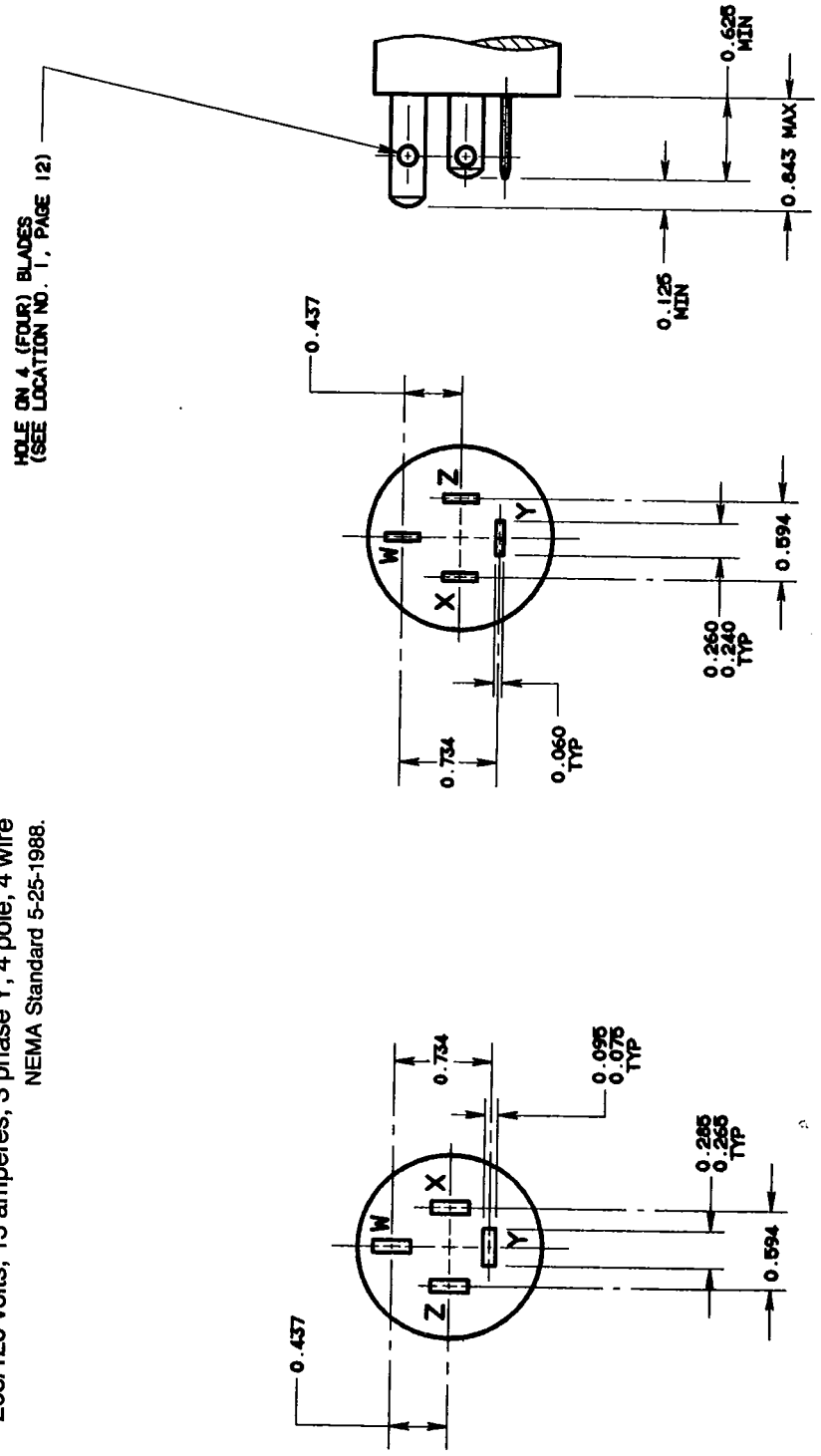

Figure 18-15
PLUG AND RECEPTACLE
208/120 volts, 15 amperes, 3 phase Y, 4 pole, 4 wire
NEMA Standard 5-25-1988.

Copyright National Electrical Manufacturers Association
Provided by IHS under license with NEMA
No reproduction or networking permitted without license from IHS
Not for Resale

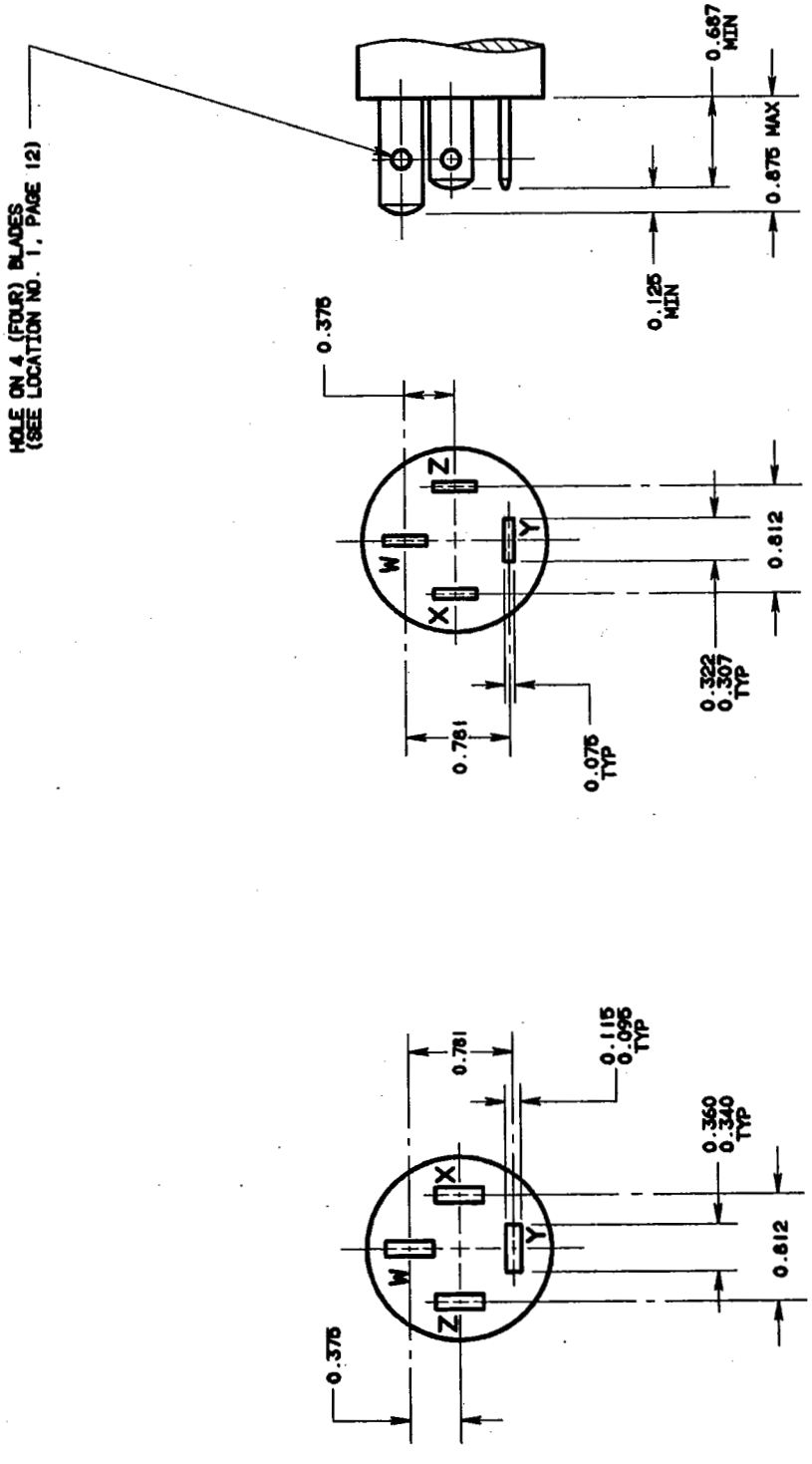

Figure 18-20
PLUG AND RECEPTACLE
208/120 volts, 20 amperes, 3 phase Y, 4 pole, 4 wire
NEMA Standard 5-25-1988.

Copyright National Electrical Manufacturers Association
Provided by IHS under license with NEMA
No reproduction or networking permitted without license from IHS

Not for Resale

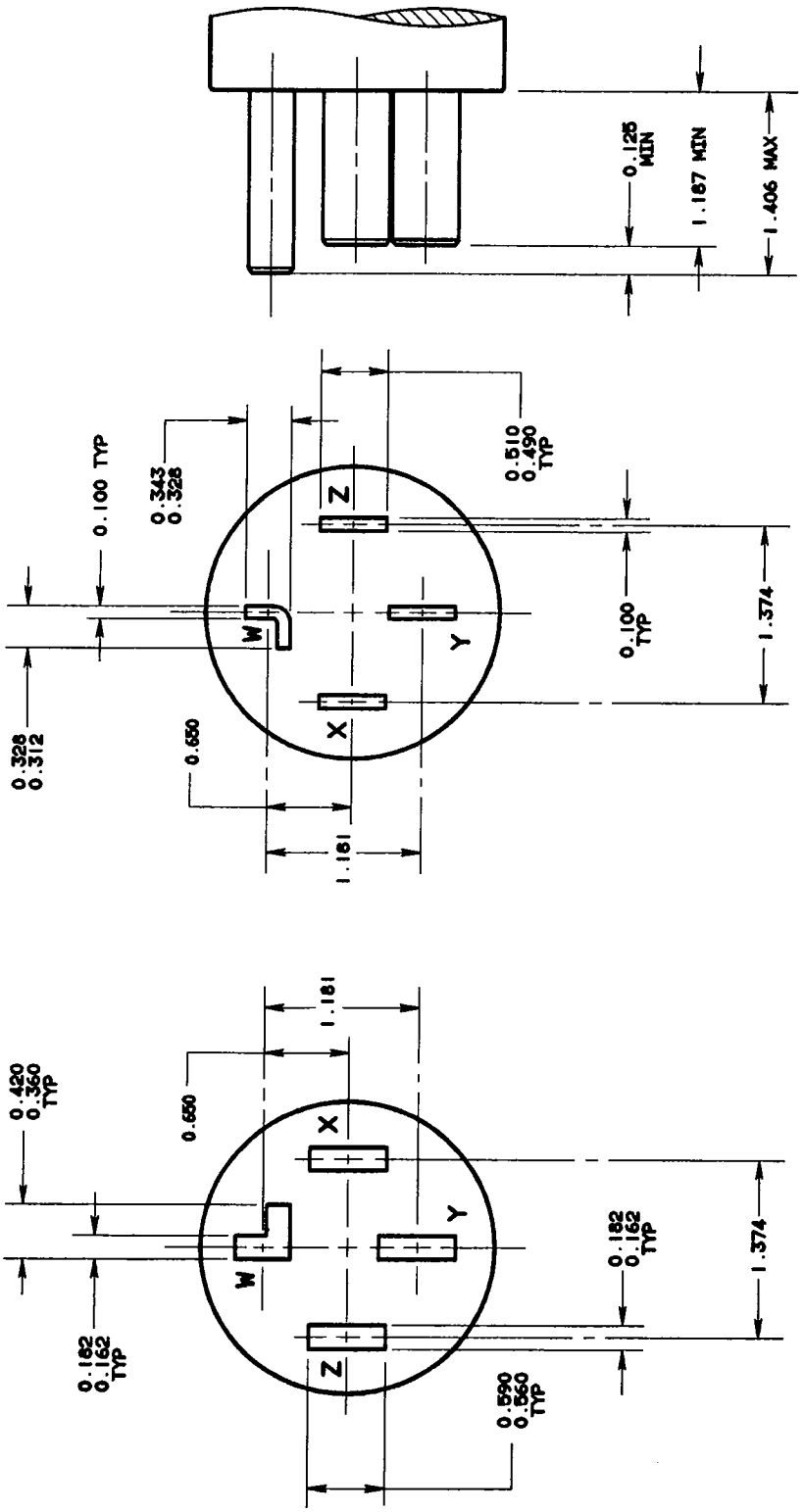

Figure 18-30
PLUG AND RECEPTACLE
208/120 volts, 30 amperes, 3 phase Y, 4 pole, 4 wire
NEMA Standard 5-25-1988.

Copyright National Electrical Manufacturers Association
Provided by IHS under license with NEMA
No reproduction or networking permitted without license from IHS

Not for Resale

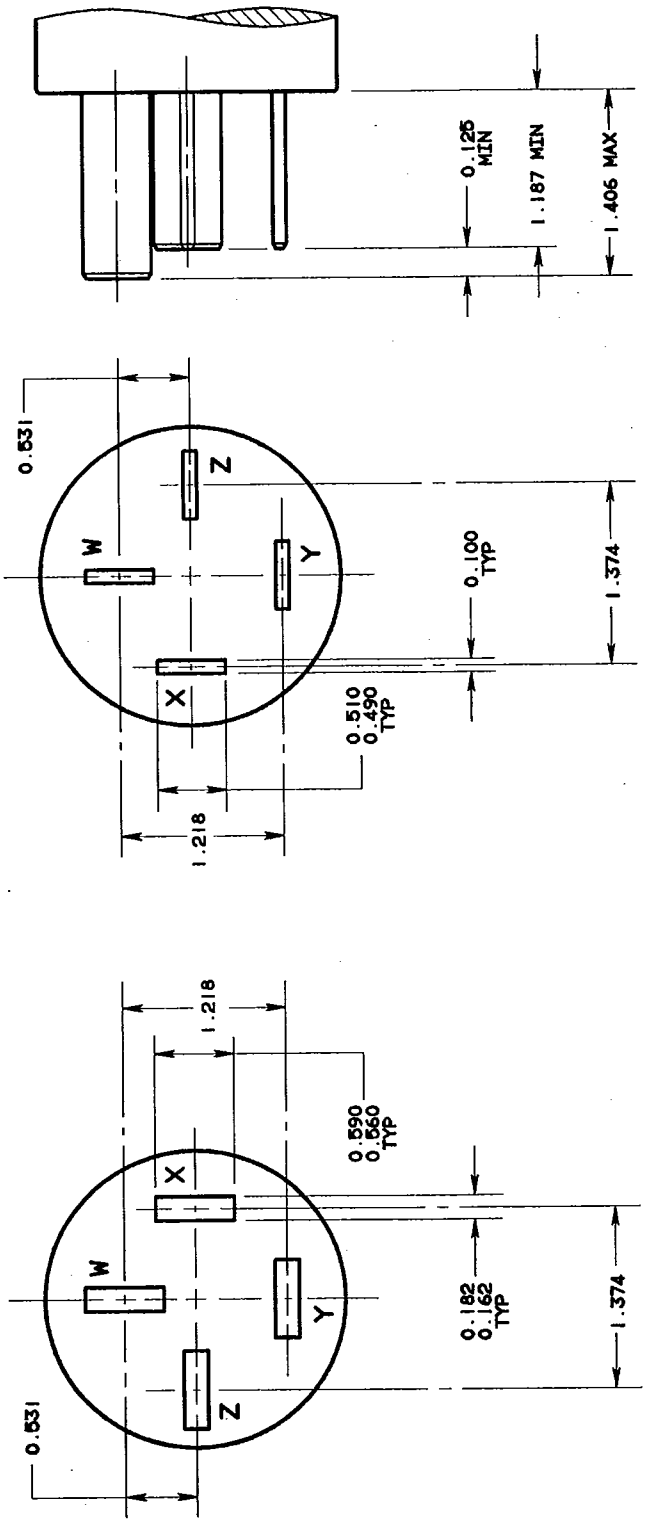

Figure 18-50
PLUG AND RECEPTACLE
208/120 volts, 50 amperes, 3 phase Y, 4 pole, 4 wire
NEMA Standard 5-25-1988.

Copyright National Electrical Manufacturers Association
Provided by IHS under license with NEMA
No reproduction or networking permitted without license from IHS

Not for Resale

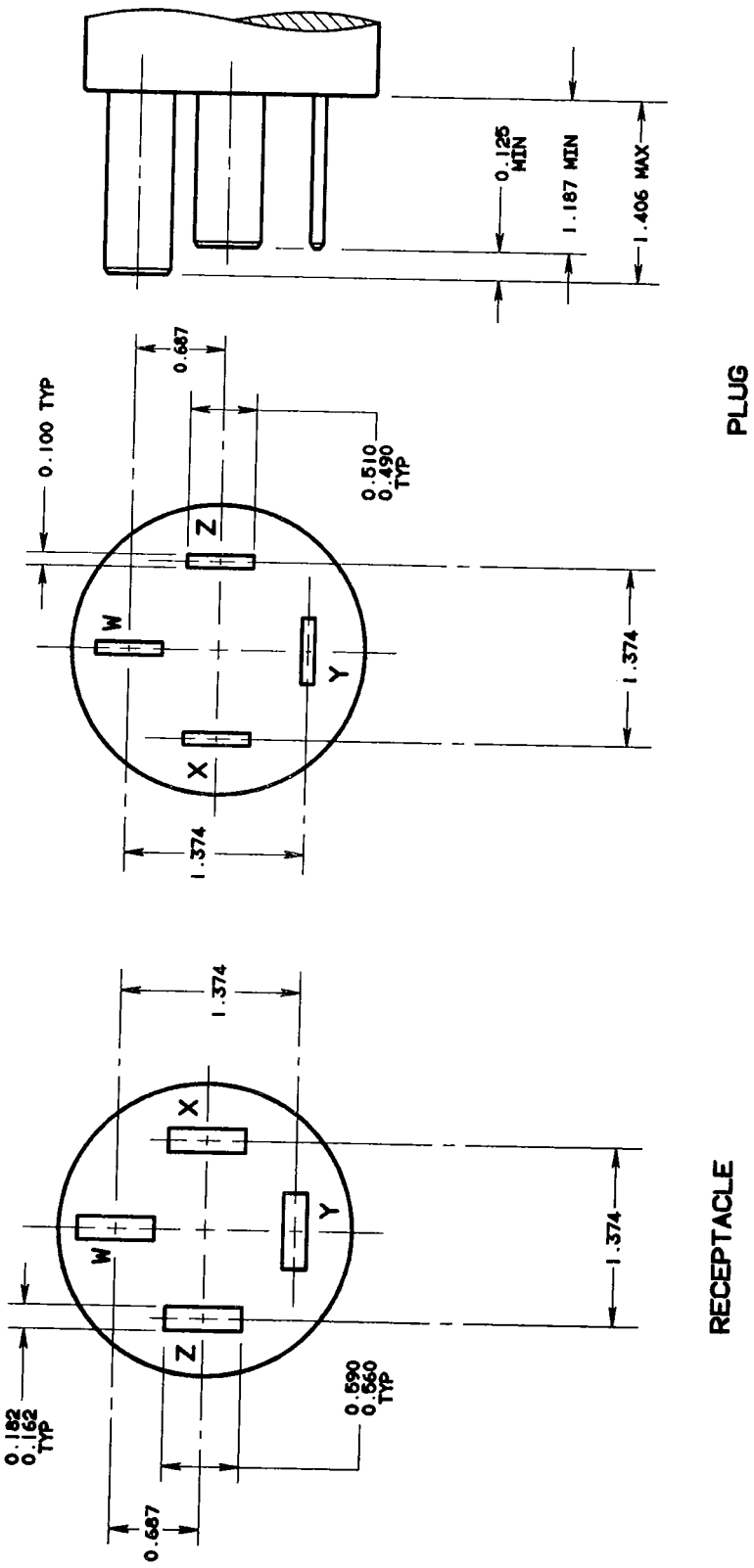

Figure 18-60
PLUG AND RECEPTACLE
208/120 volts, 60 amperes, 3 phase Y, 4 pole, 4 wire
NEMA Standard 5-25-1988.

Copyright National Electrical Manufacturers Association
Provided by IHS under license with NEMA
No reproduction or networking permitted without license from IHS

Not for Resale

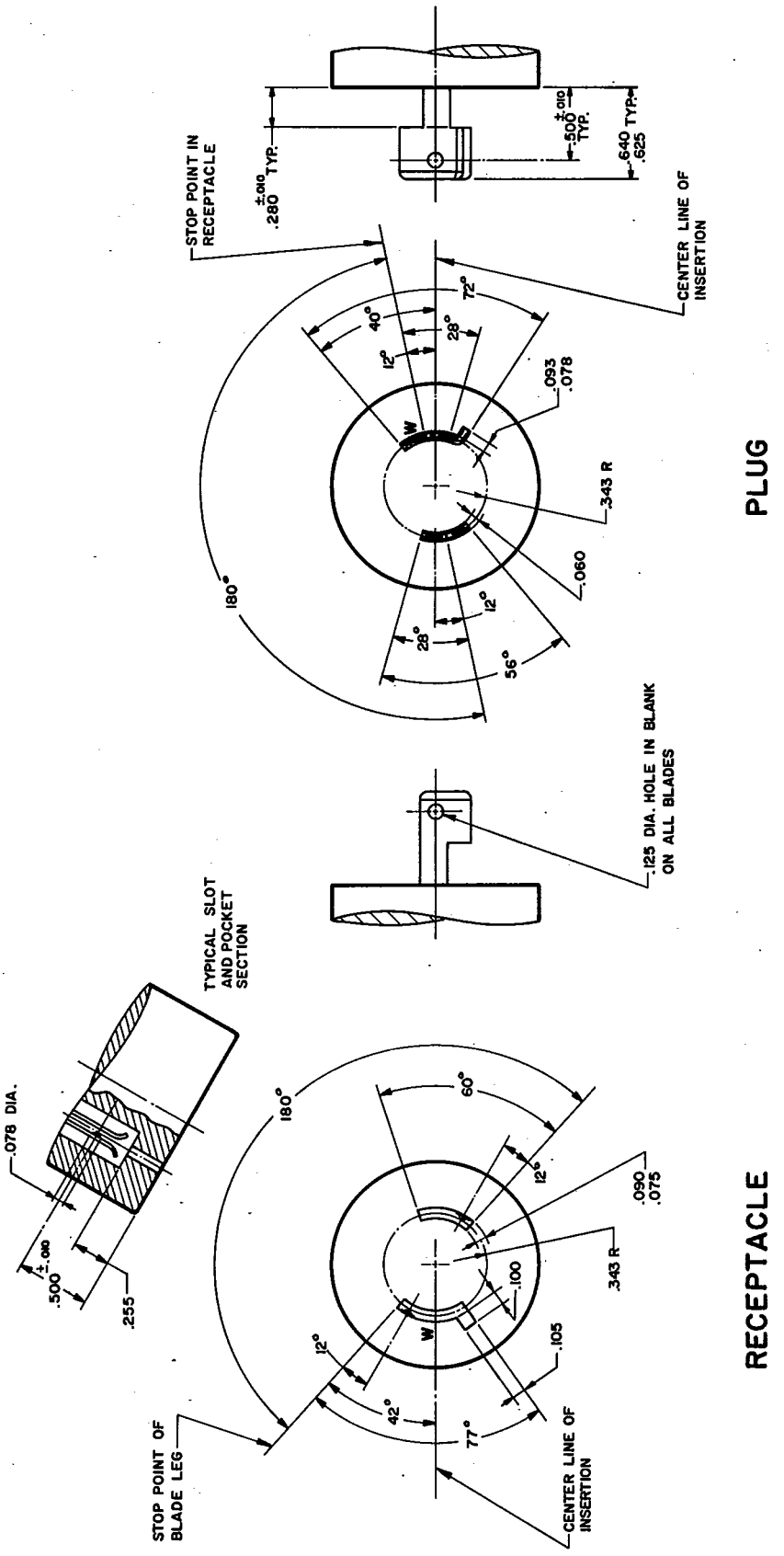

Figure L1-15
LOCKING TYPE PLUG AND RECEPTACLE
125 volts, 15 amperes, 2 pole, 2 wire
NEMA Standard 11-3-1983.

Copyright National Electrical Manufacturers Association
Provided by IHS under license with NEMA
No reproduction or networking permitted without license from IHS

Not for Resale

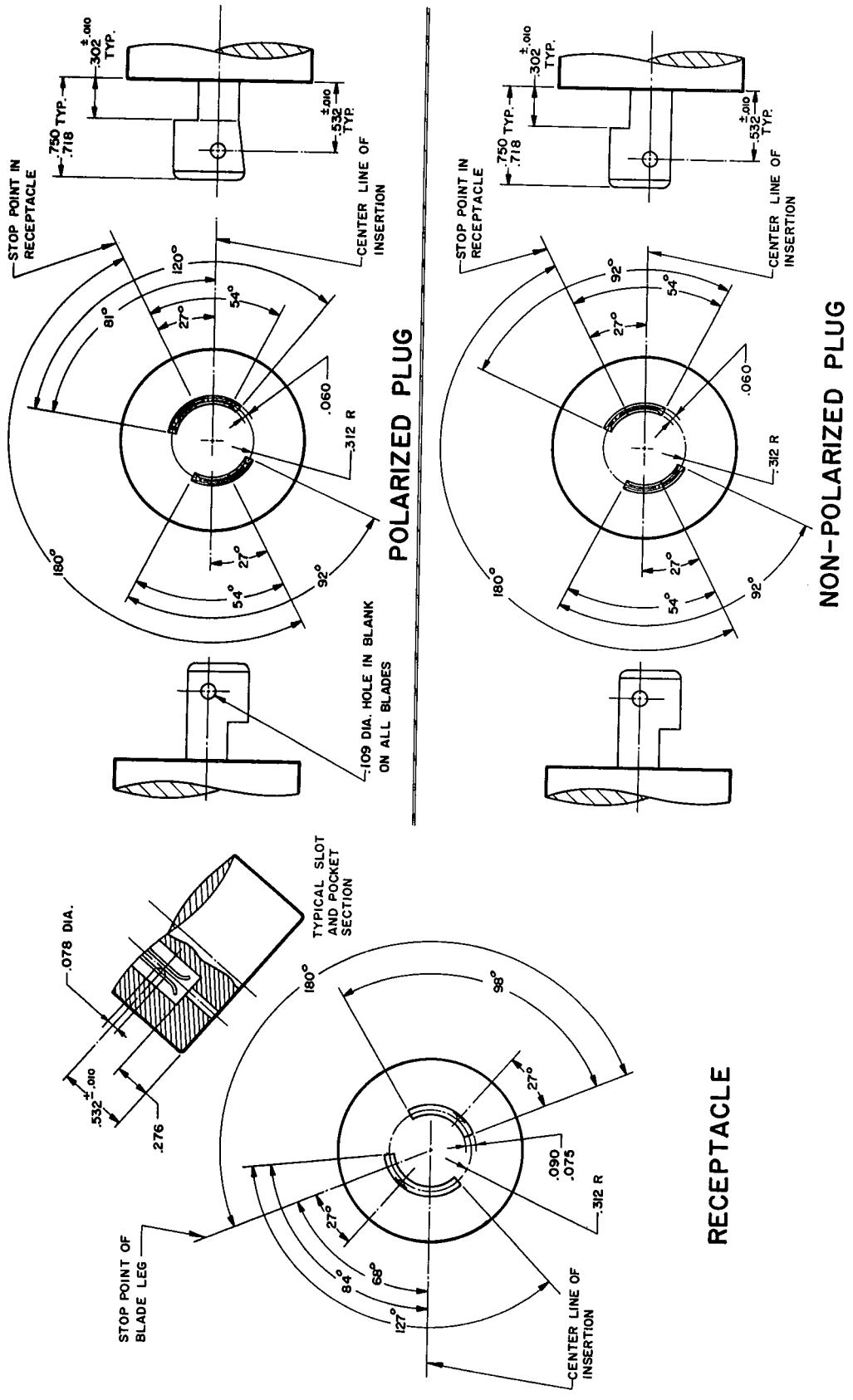

Figure L2-20
LOCKING TYPE PLUG AND RECEPTACLE
250 volts, 20 amperes, 2 pole, 2 wire
NEMA Standard 11-3-1983.

Copyright National Electrical Manufacturers Association
Provided by IHS under license with NEMA
No reproduction or networking permitted without license from IHS

Not for Resale

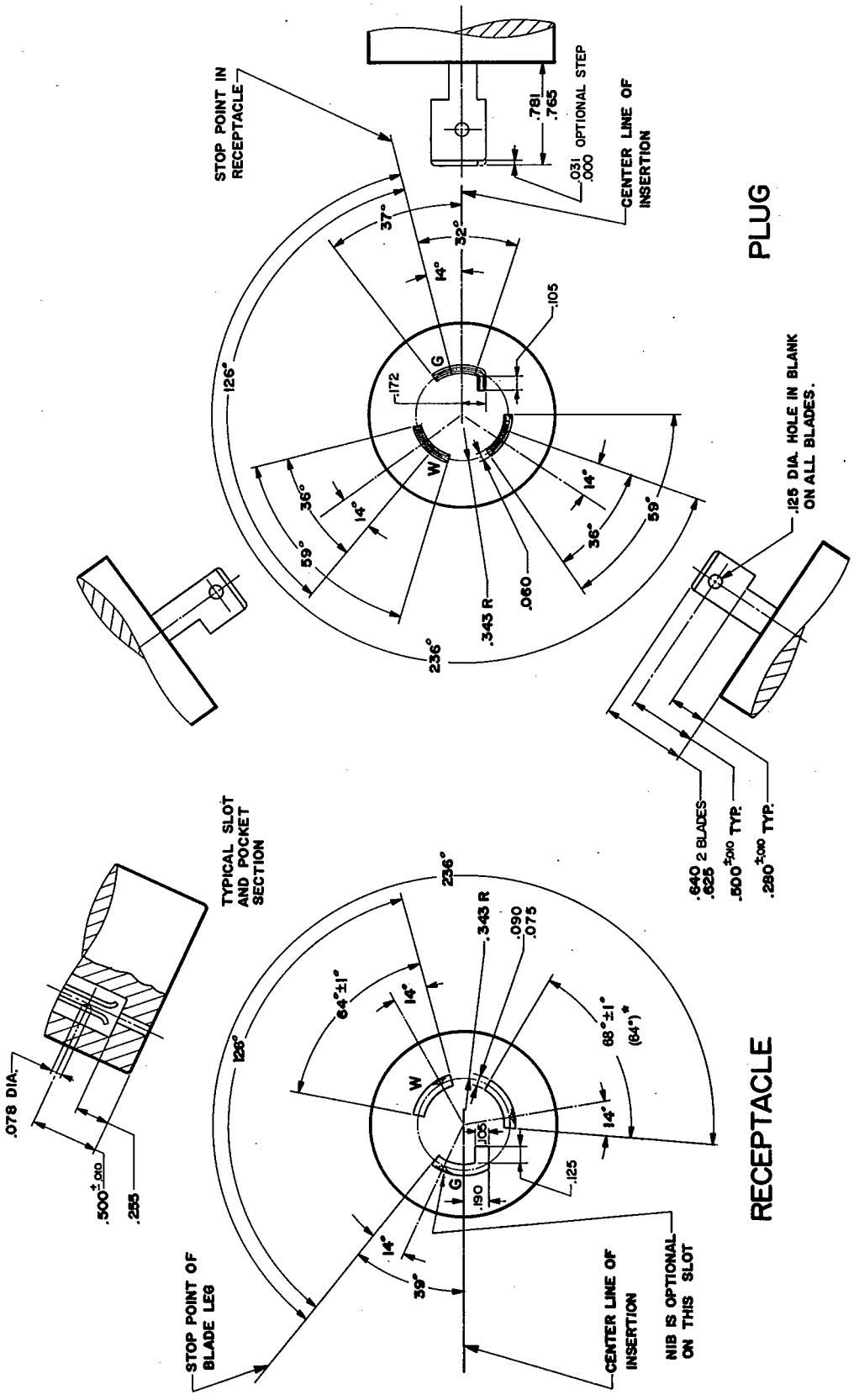

Figure L5-15
LOCKING TYPE PLUG AND RECEPTACLE
125 volts, 15 amperes, 2 pole, 3 wire, grounding type
NEMA Standard 11-3-1983.
* Suggested Standard for Future Design 11-3-1983.

Copyright National Electrical Manufacturers Association
Provided by IHS under license with NEMA
No reproduction or networking permitted without license from IHS

Not for Resale

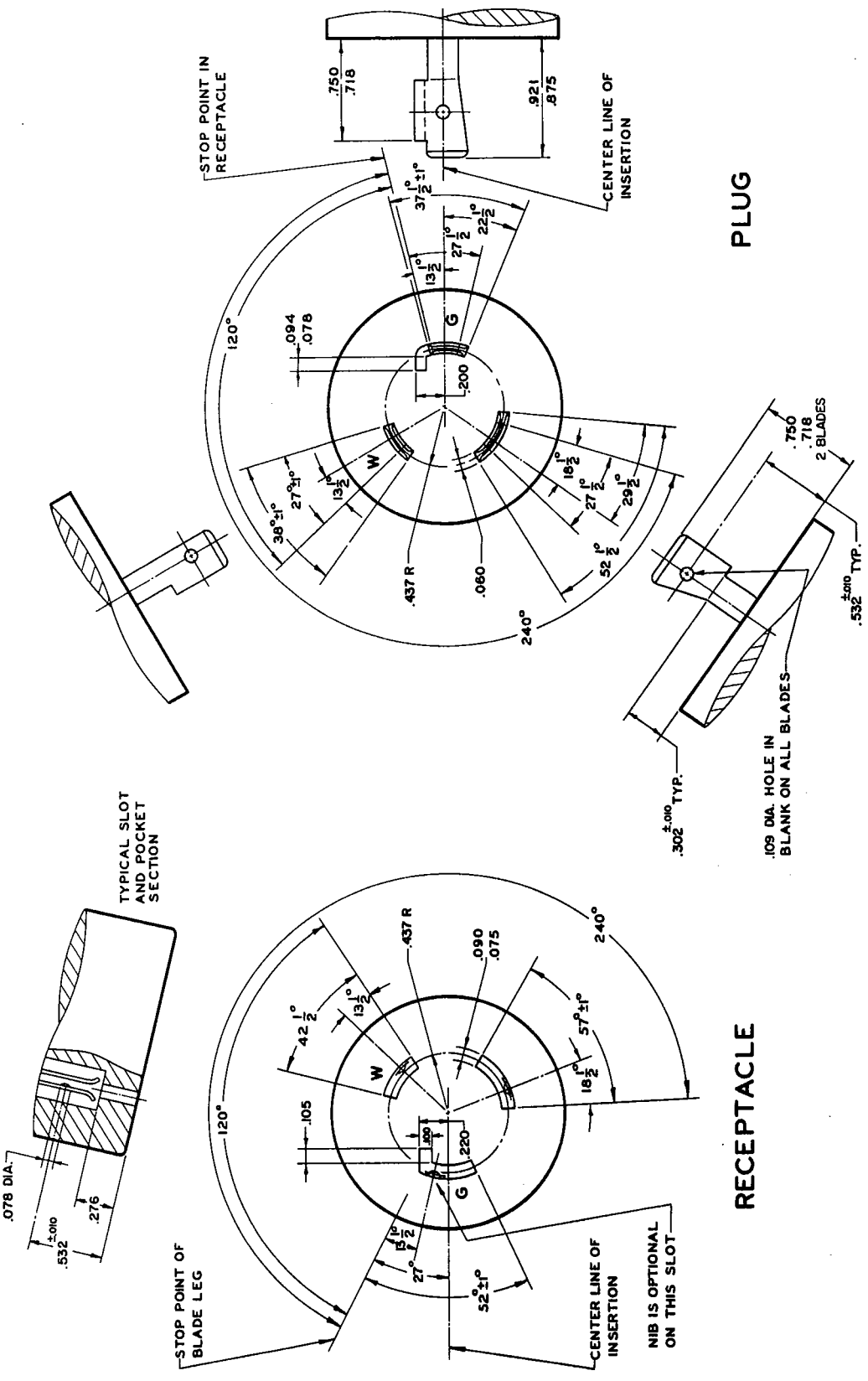

Figure L5-20
LOCKING TYPE PLUG AND RECEPTACLE
125 volts, 20 amperes, 2 pole, 3 wire, grounding type
NEMA Standard 11-3-1983.

Copyright National Electrical Manufacturers Association
Provided by IHS under license with NEMA
No reproduction or networking permitted without license from IHS

Not for Resale

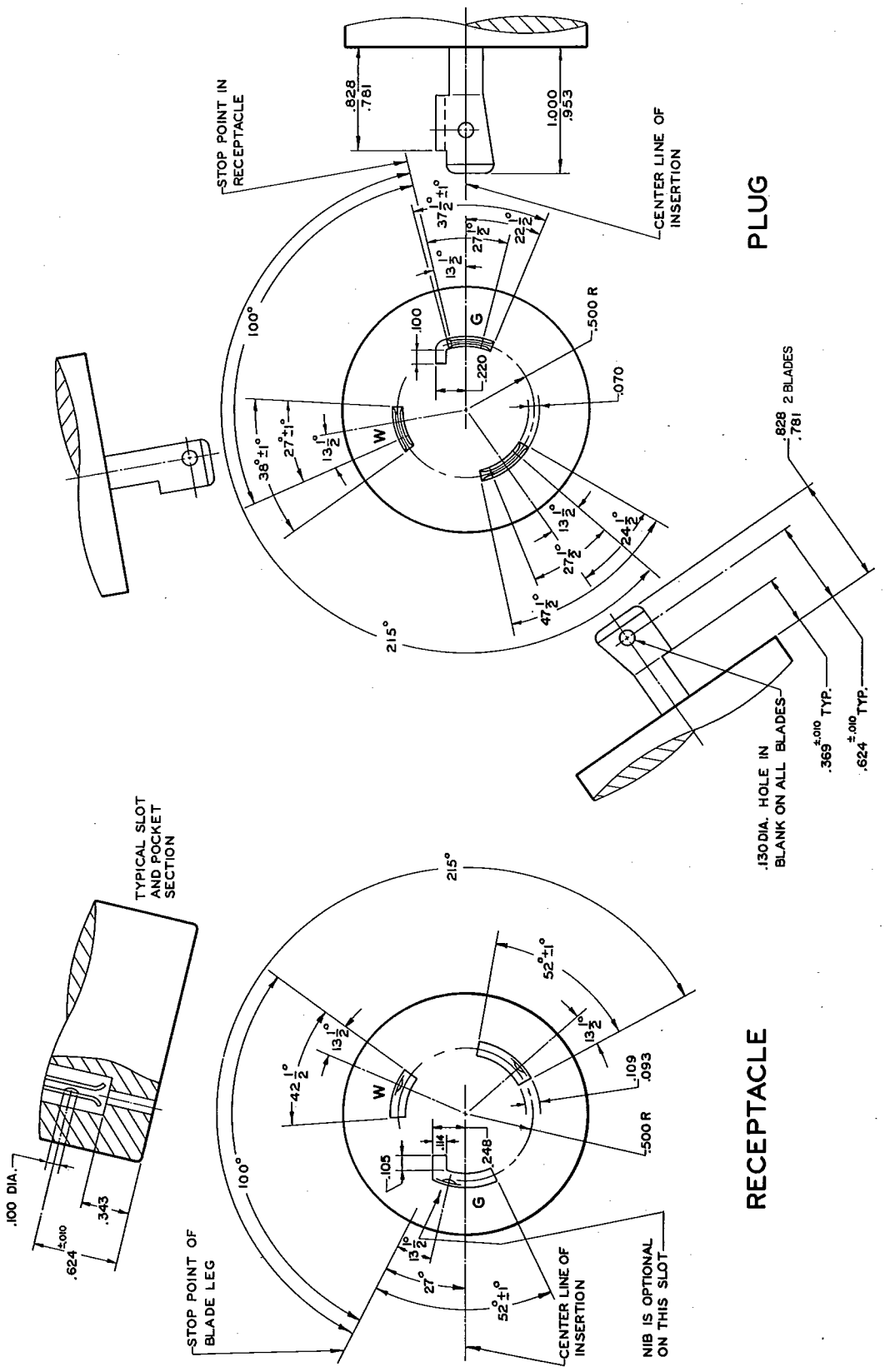

Figure L5-30
LOCKING TYPE PLUG AND RECEPTACLE
125 volts, 30 amperes, 2 pole, 3 wire, grounding type
NEMA Standard 11-3-1983.

Copyright National Electrical Manufacturers Association
Provided by IHS under license with NEMA
No reproduction or networking permitted without license from IHS

Not for Resale

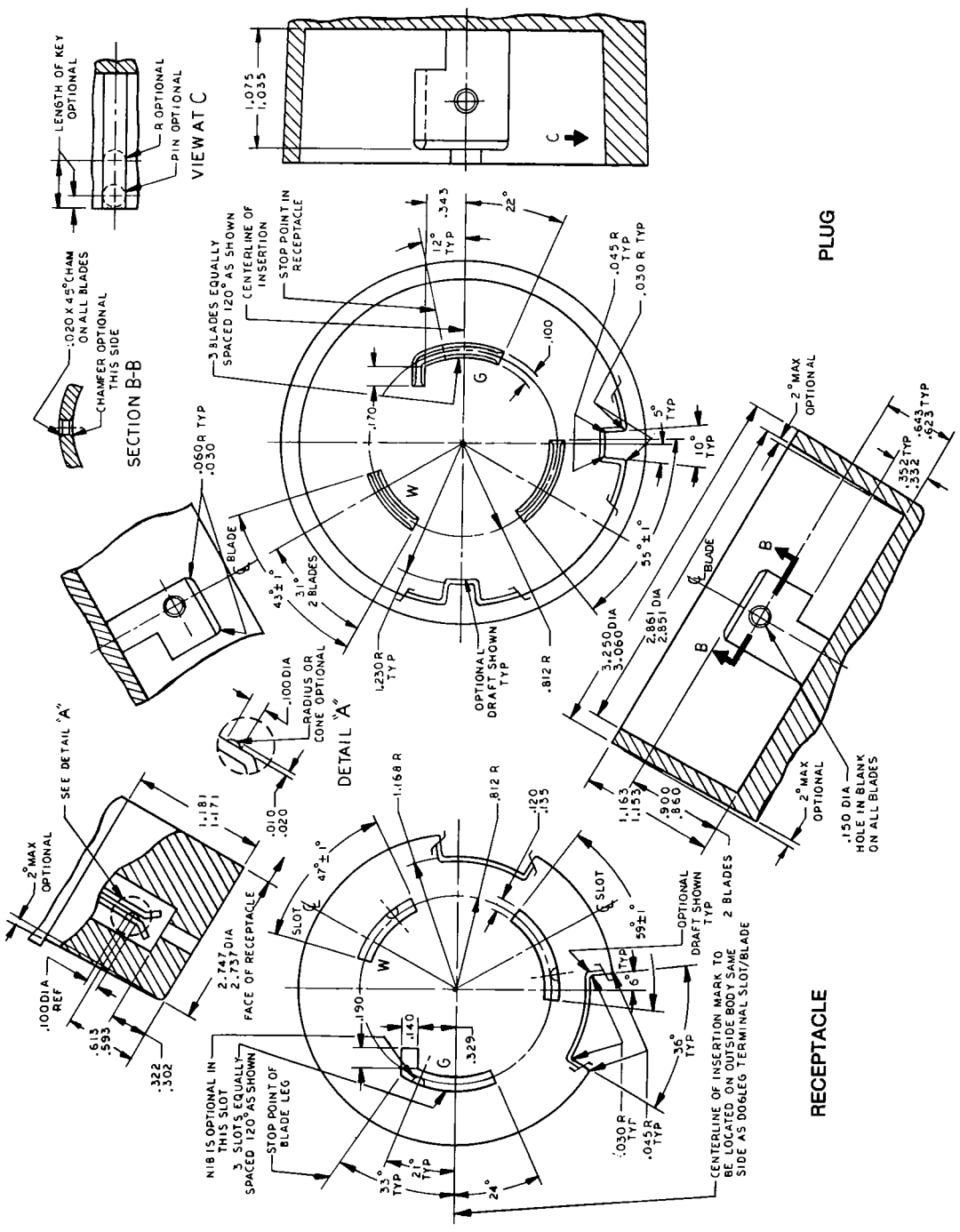

Figure L5-50
LOCKING TYPE PLUG AND RECEPTACLE
125 volts, 50 amperes, 2 pole, 3 wire, grounding type
NEMA Standard 11-3-1983.

Copyright National Electrical Manufacturers Association
Provided by IHS under license with NEMA
No reproduction or networking permitted without license from IHS
Not for Resale

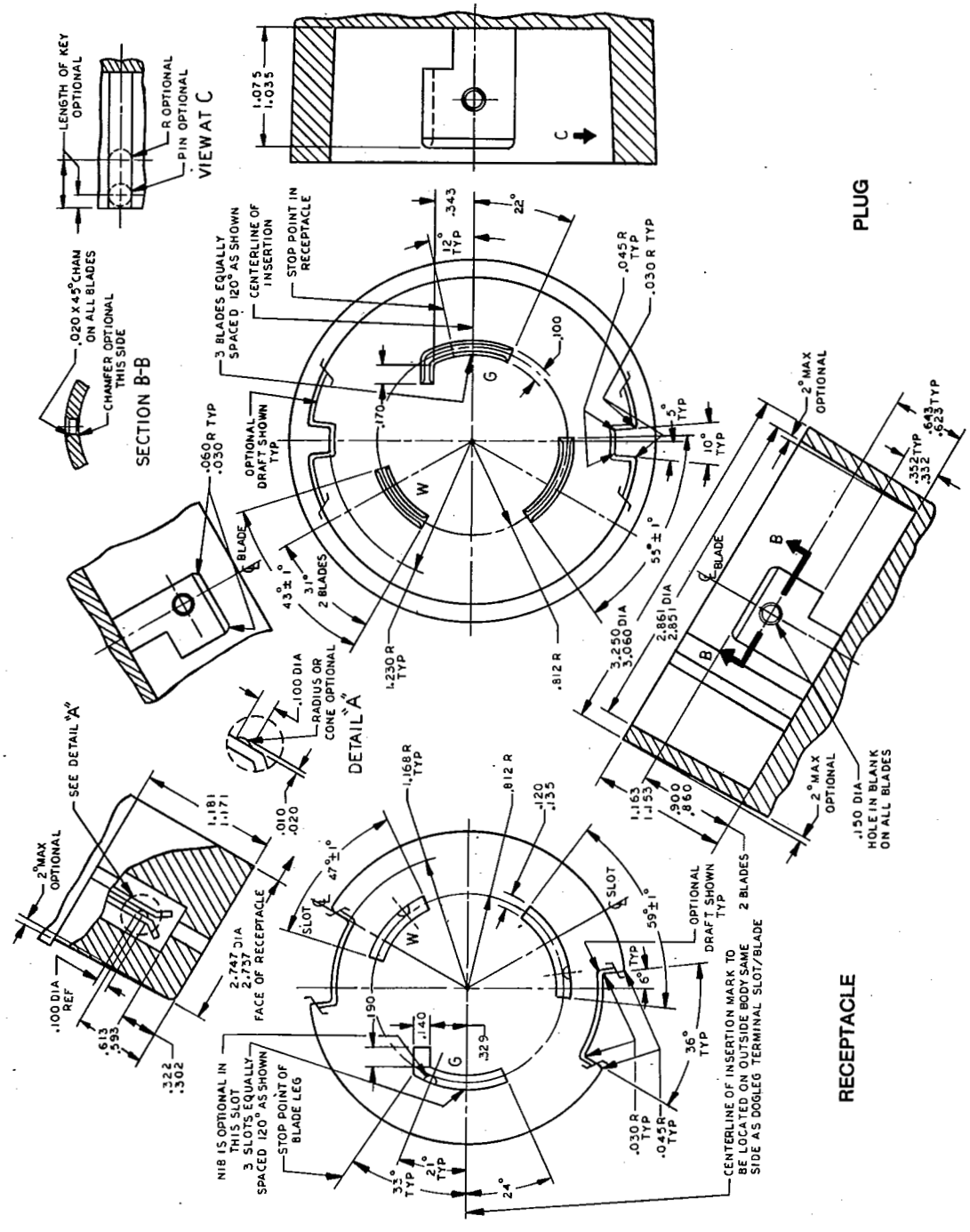

Figure L5-60
LOCKING TYPE PLUG AND RECEPTACLE
125 volts, 60 amperes, 2 pole, 3 wire, grounding type
NEMA Standard 11-3-1983.

Copyright National Electrical Manufacturers Association
Provided by IHS under license with NEMA
No reproduction or networking permitted without license from IHS

Not for Resale

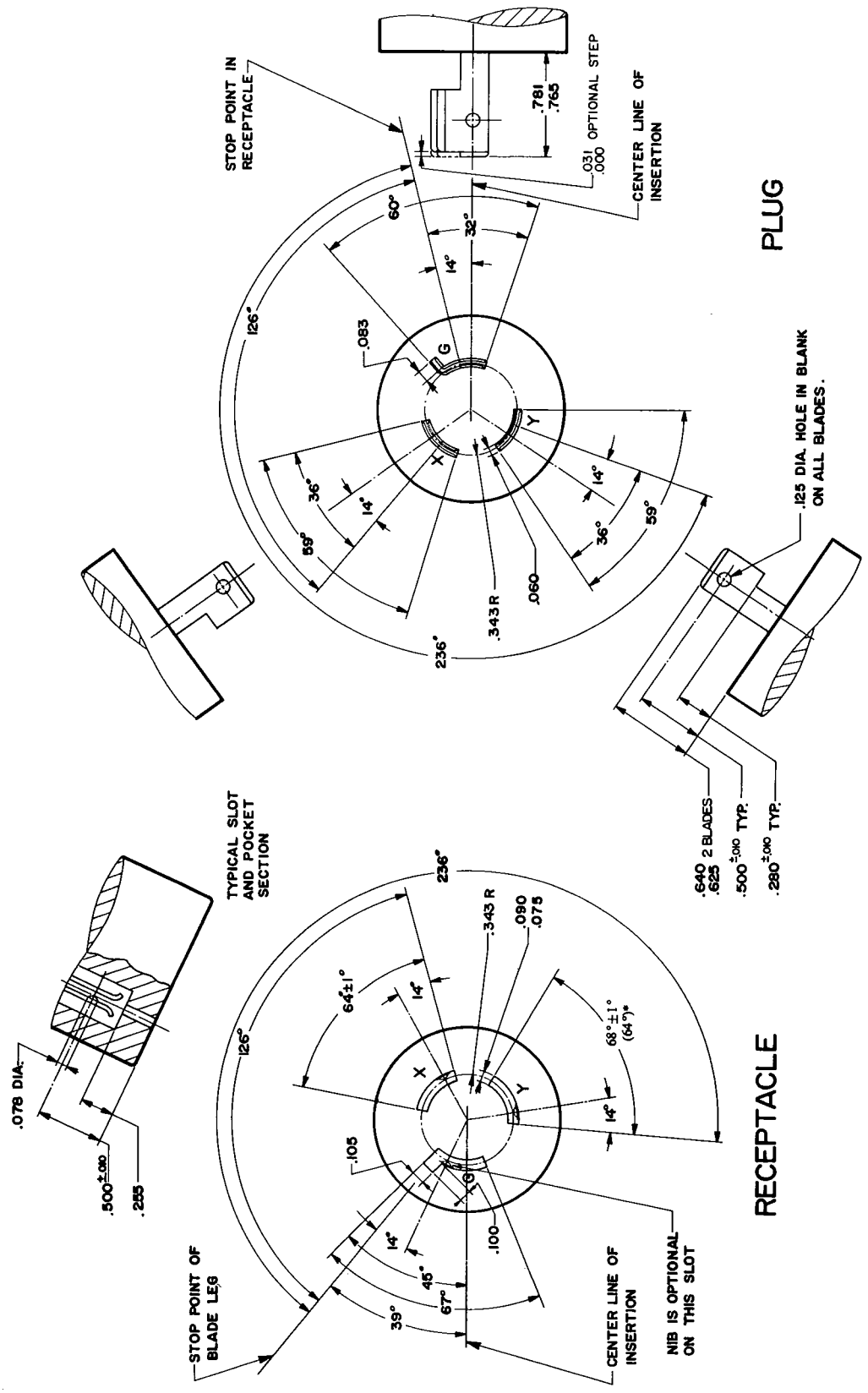

Figure L6-15
LOCKING TYPE PLUG AND RECEPTACLE
250 volts, 15 amperes, 2 pole, 3 wire, grounding type
NEMA Standard 11-3-1983.
* Suggested Standard for Future Design 11-3-1983.

Copyright National Electrical Manufacturers Association
Provided by IHS under license with NEMA
No reproduction or networking permitted without license from IHS
Not for Resale

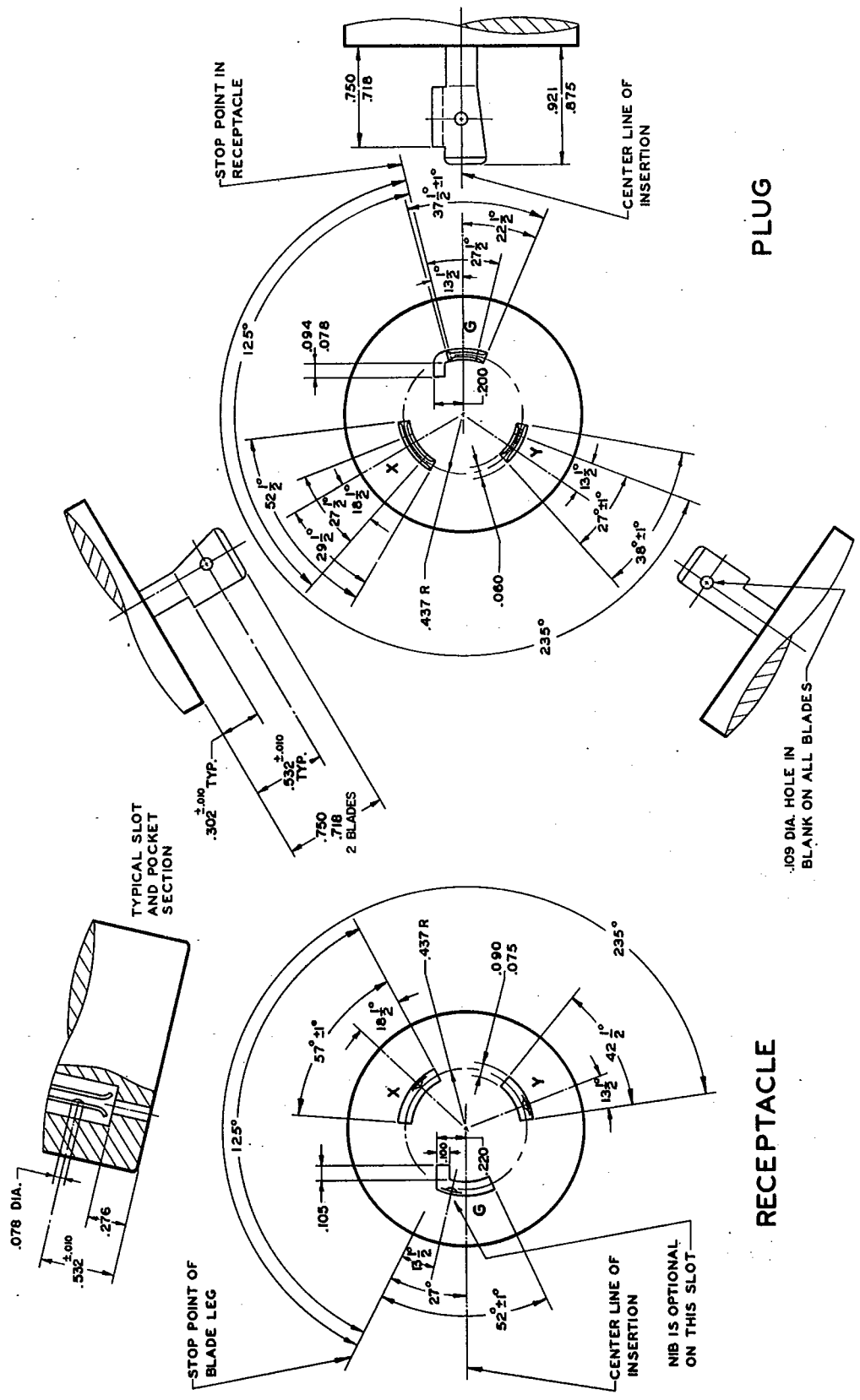

Figure L6-20
LOCKING TYPE PLUG AND RECEPTACLE
250 volts, 20 amperes, 2 pole, 3 wire, grounding type
NEMA Standard 11-3-1983.

Copyright National Electrical Manufacturers Association
Provided by IHS under license with NEMA
• No reproduction or networking permitted without license from IHS

Not for Resale

Figure L6-30
LOCKING TYPE PLUG AND RECEPTACLE
250 volts, 30 amperes, 2 pole, 3 wire, grounding type
NEMA Standard 11-3-1983

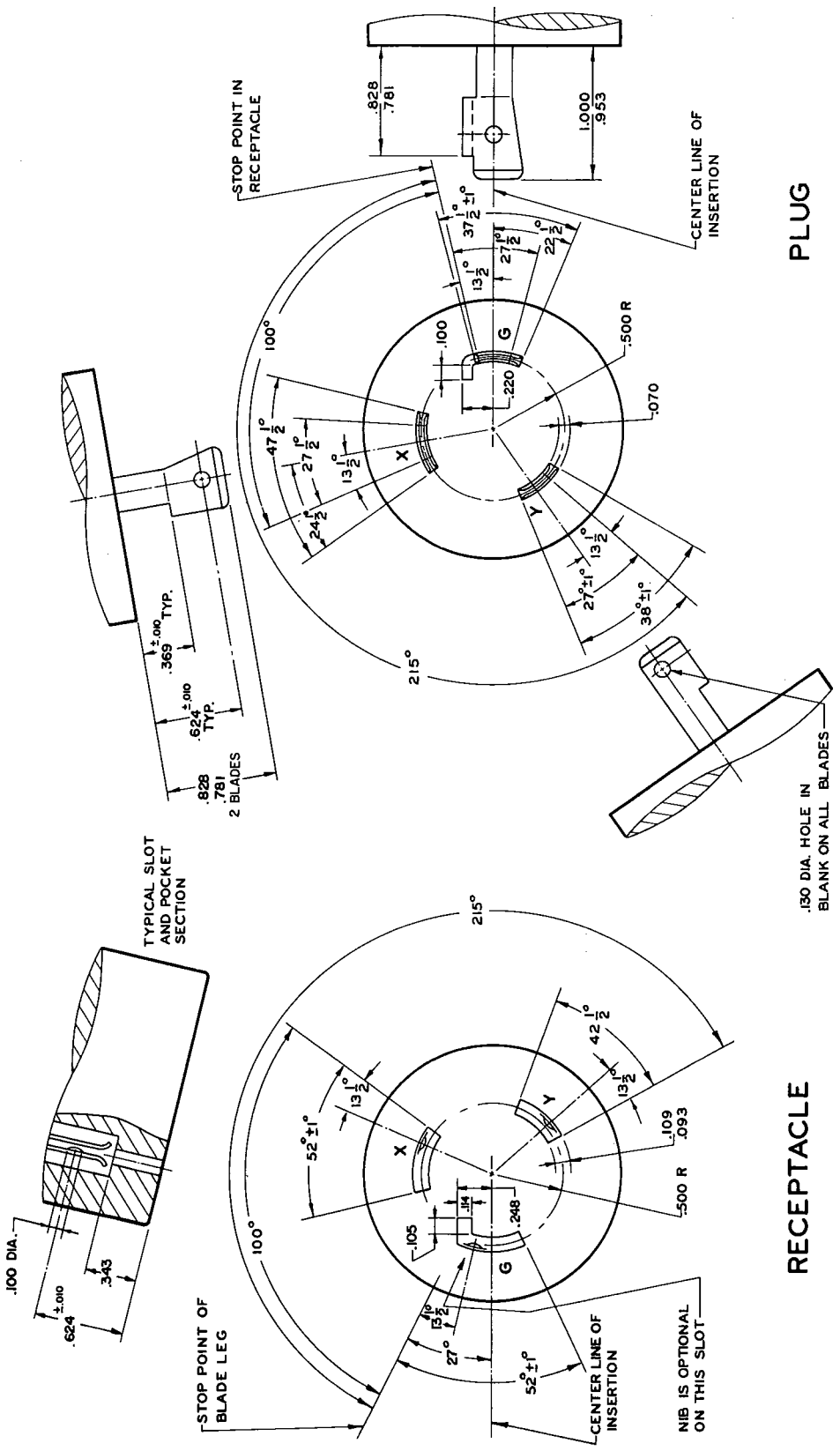

Copyright National Electrical Manufacturers Association
Provided by IHS under license with NEMA
No reproduction or networking permitted without license from IHS

Not for Resale

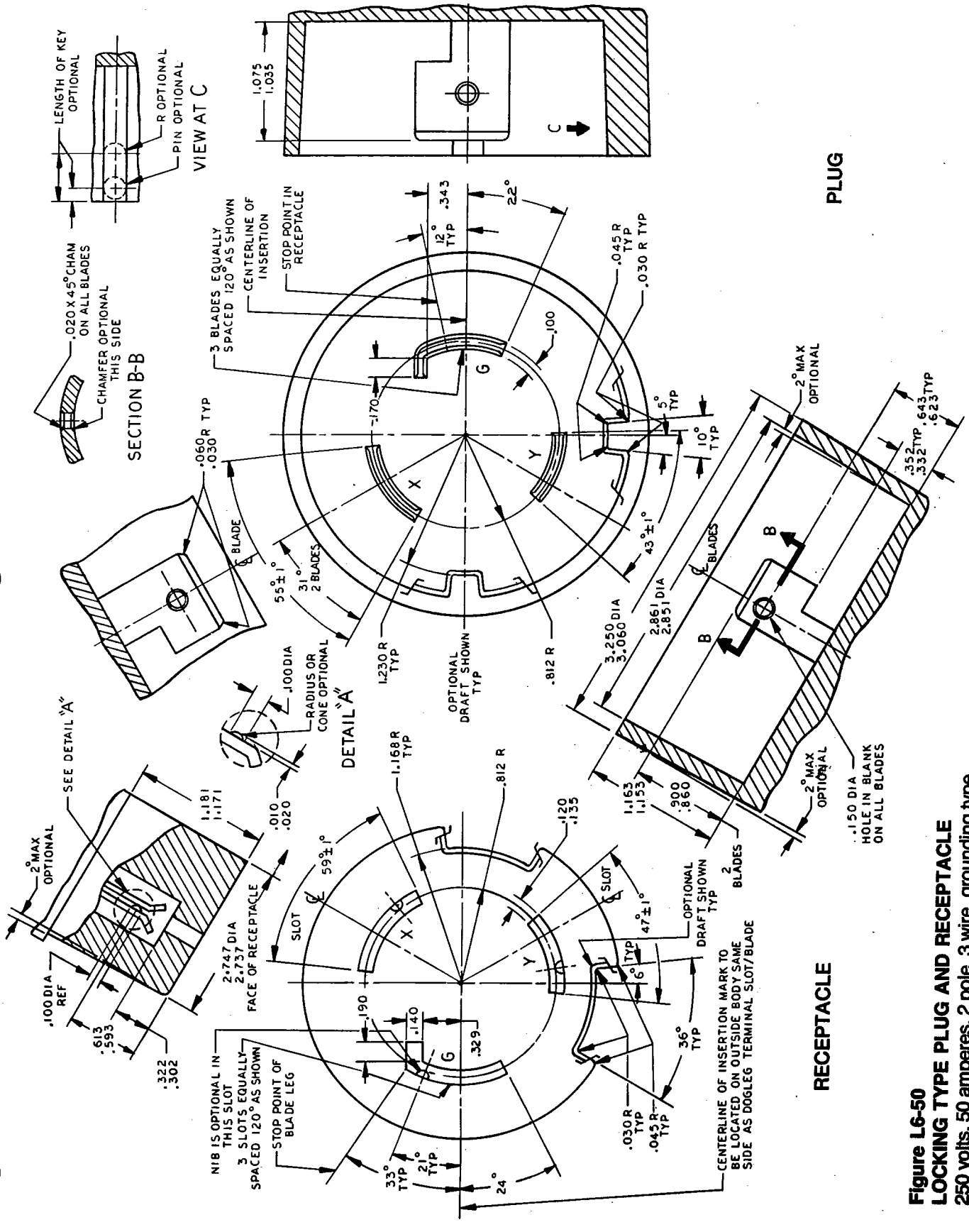

Figure L6-50
LOCKING TYPE PLUG AND RECEPTACLE
250 volts, 50 amperes, 2 pole, 3 wire, grounding type
NEMA Standard 11-3-1983.

Copyright National Electrical Manufacturers Association
Provided by IHS under license with NEMA
No reproduction or networking permitted without license from IHS

Not for Resale

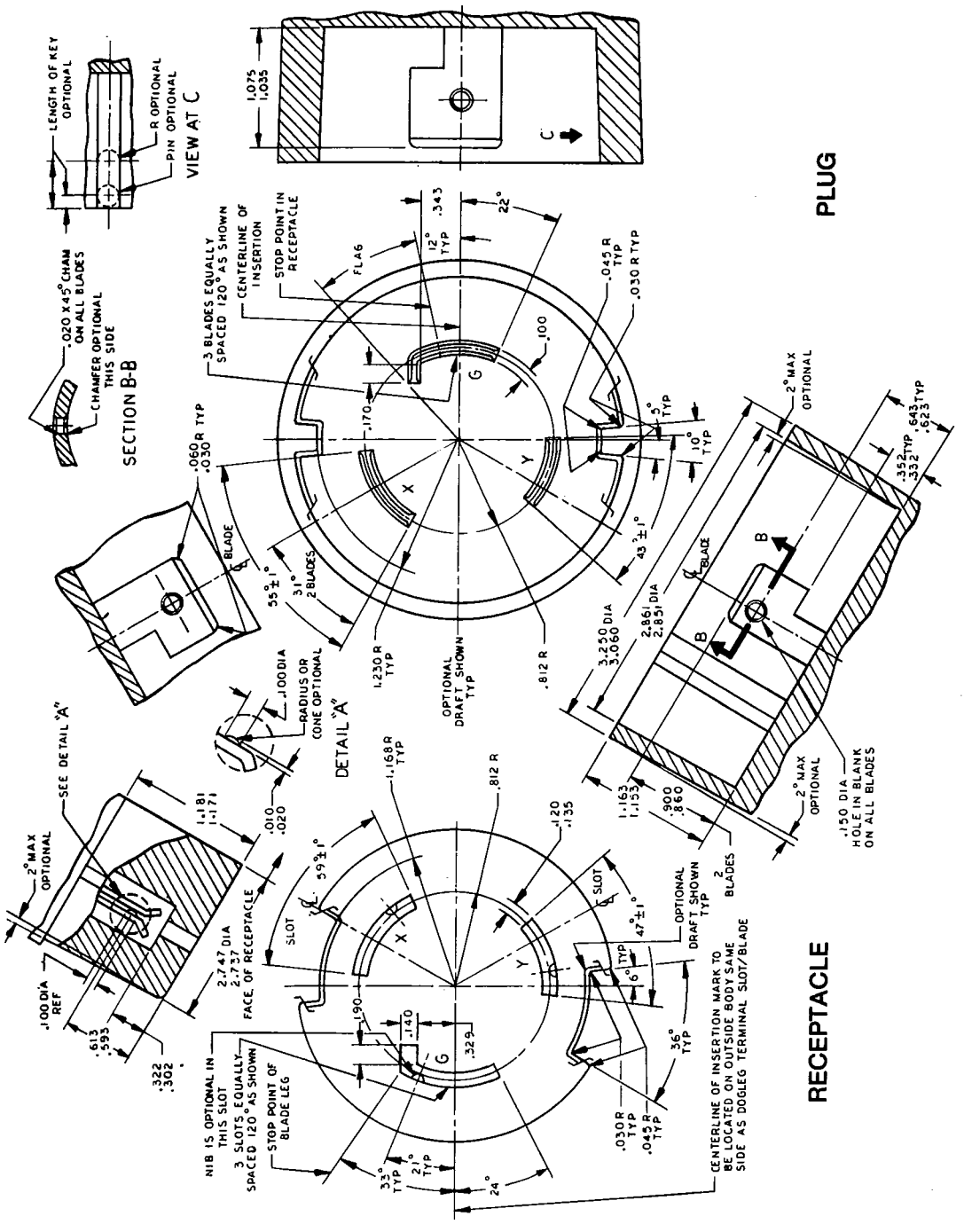

Figure L6-60
LOCKING TYPE PLUG AND RECEPTACLE
250 volts, 60 amperes, 2 pole, 3 wire, grounding type
NEMA Standard 11-3-1983.

Copyright National Electrical Manufacturers Association
Provided by IHS under license with NEMA
No reproduction or networking permitted without license from IHS

Not for Resale

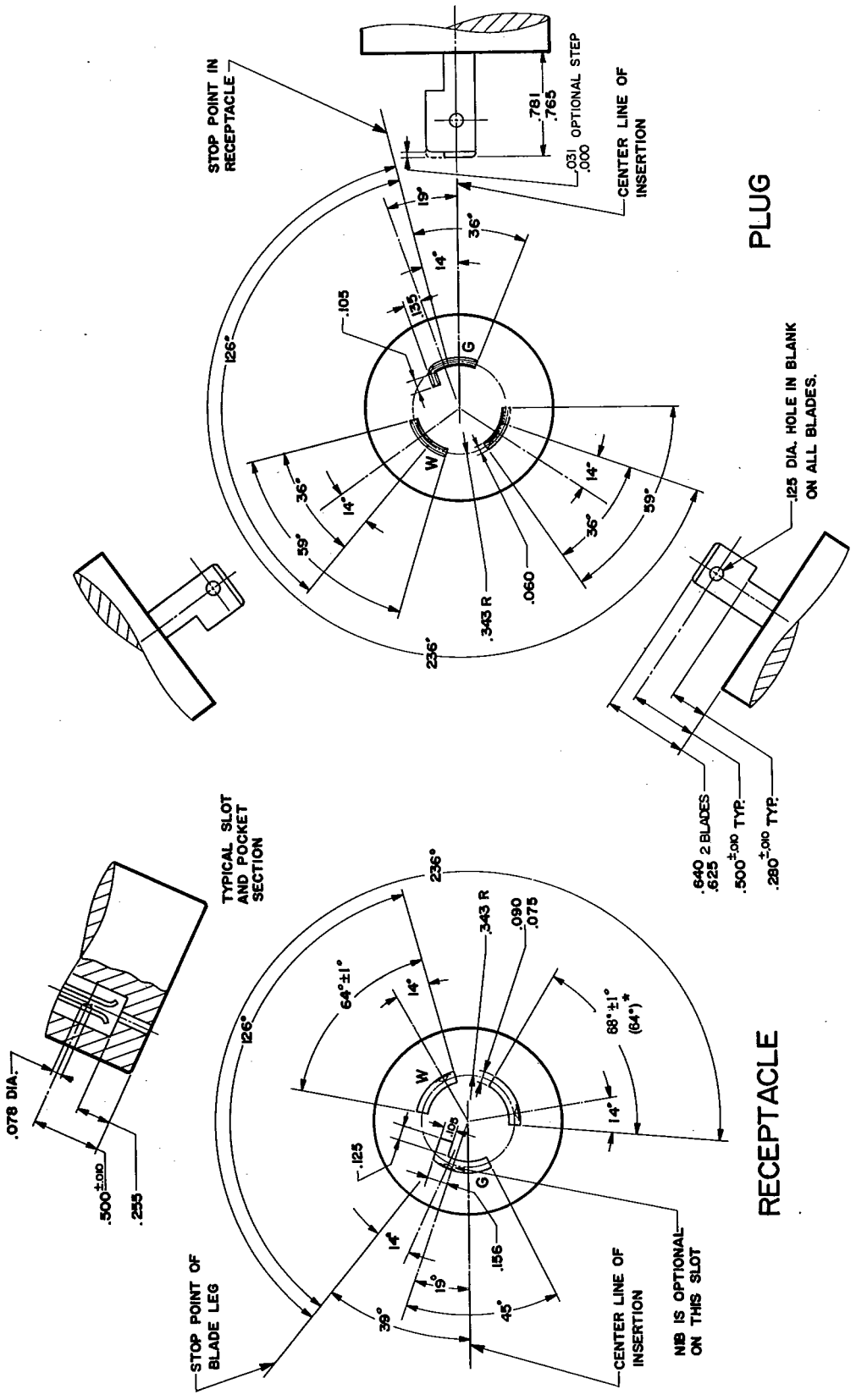

Figure L7-15
LOCKING TYPE PLUG AND RECEPTACLE
277 volts ac, 15 amperes, 2 pole, 3 wire, grounding type

NEMA Standard 11-3-1983.

*Suggested Standard for Future Design 11-3-1983.

Copyright National Electrical Manufacturers Association
Provided by IHS under license with NEMA
No reproduction or networking permitted without license from IHS

Not for Resale

6470247 0006785 T

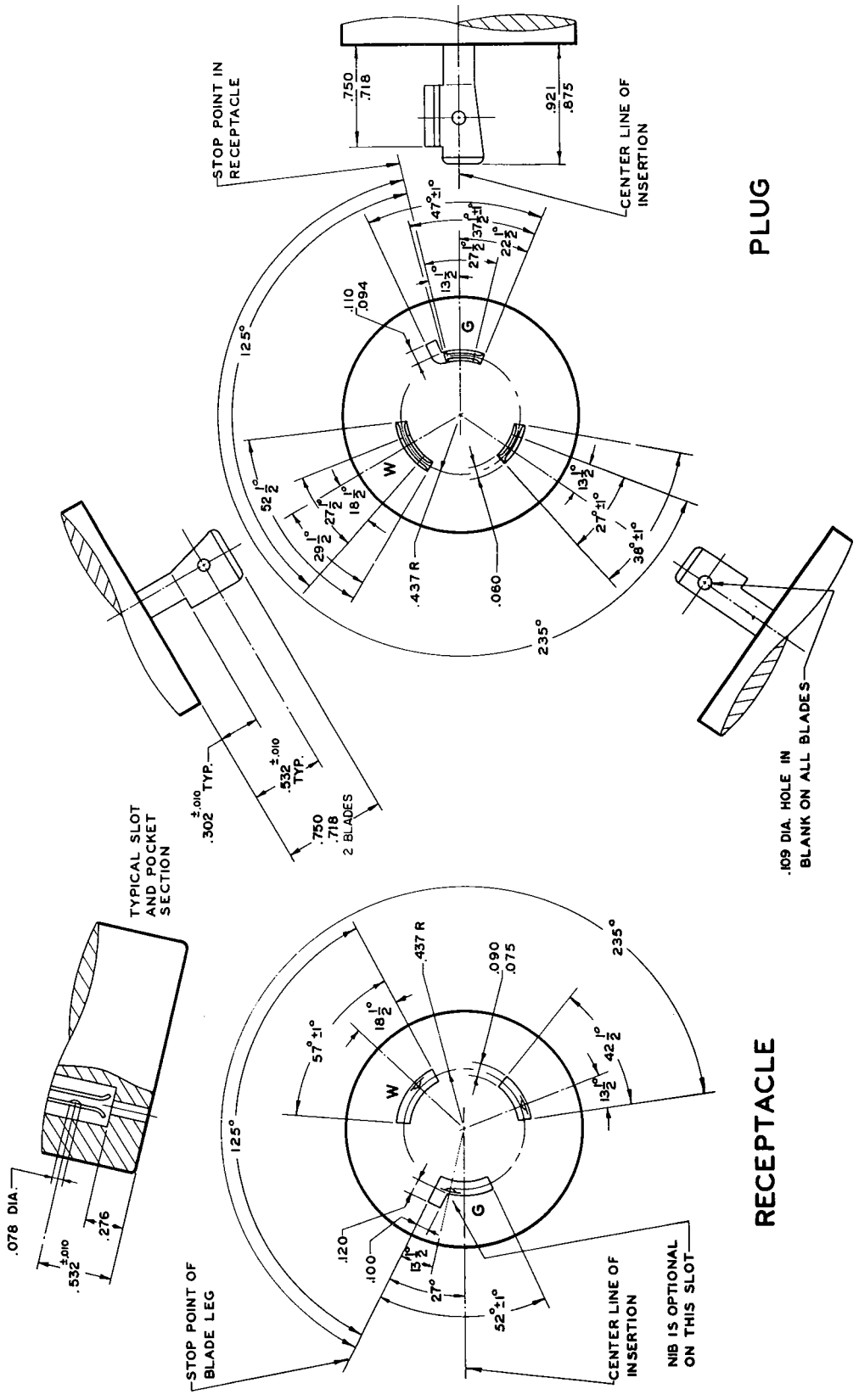

Figure L7-20
LOCKING TYPE PLUG AND RECEPTACLE
277 volts ac, 20 amperes, 2 pole, 3 wire, grounding type
NEMA Standard 11-3-1983.

Copyright National Electrical Manufacturers Association
Provided by IHS under license with NEMA
No reproduction or networking permitted without license from IHS

Not for Resale

Copyright National Electrical Manufacturers Association
Provided by IHS under license with NEMA
No reproduction or networking permitted without license from IHS
Not for Resale

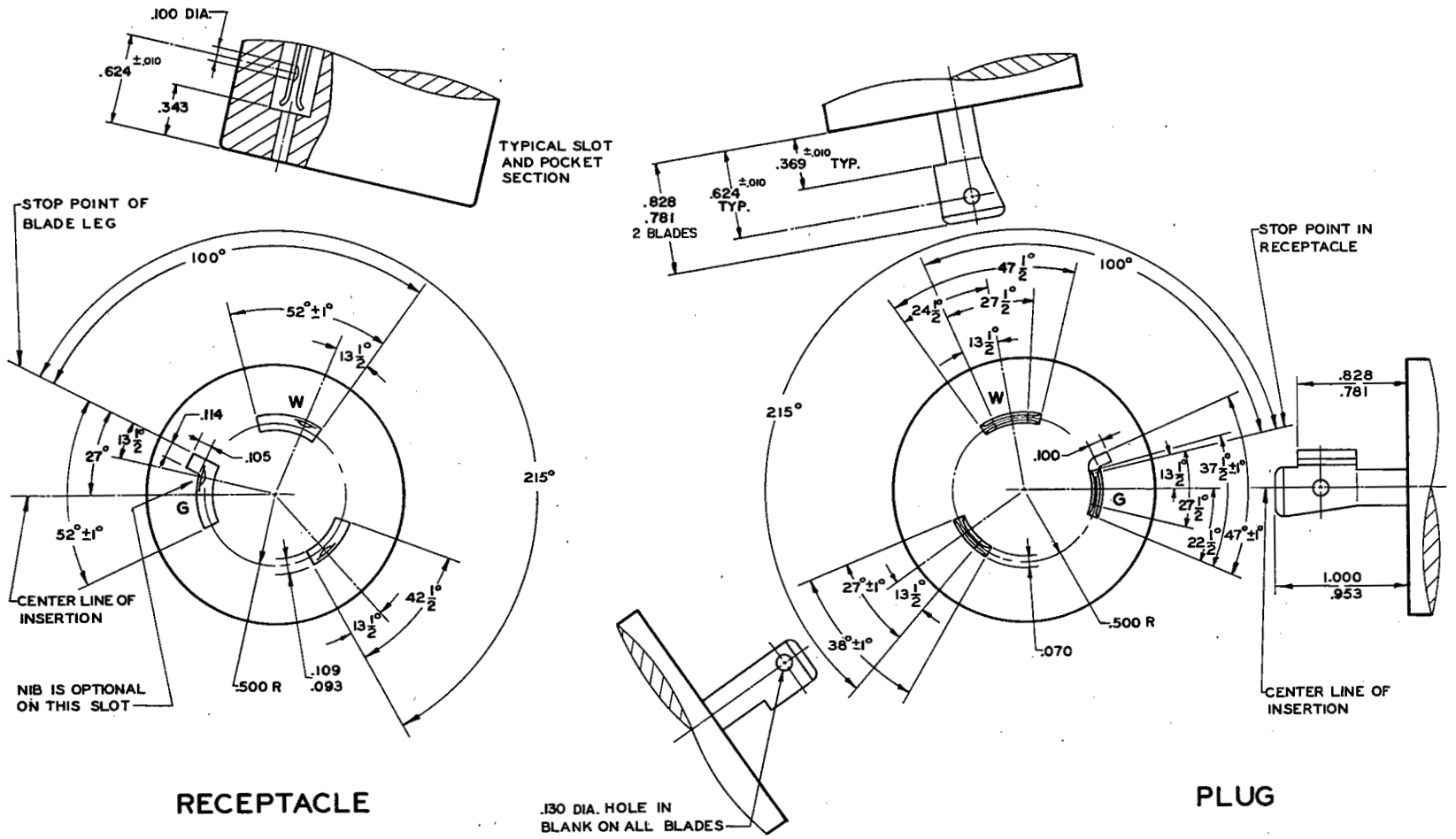

Figure L7-30
LOCKING TYPE PLUG AND RECEPTACLE
277 volts ac, 30 amperes, 2 pole, 3 wire, grounding type
NEMA Standard 11-3-1983.

WD 6-88
6720247 0006985 4

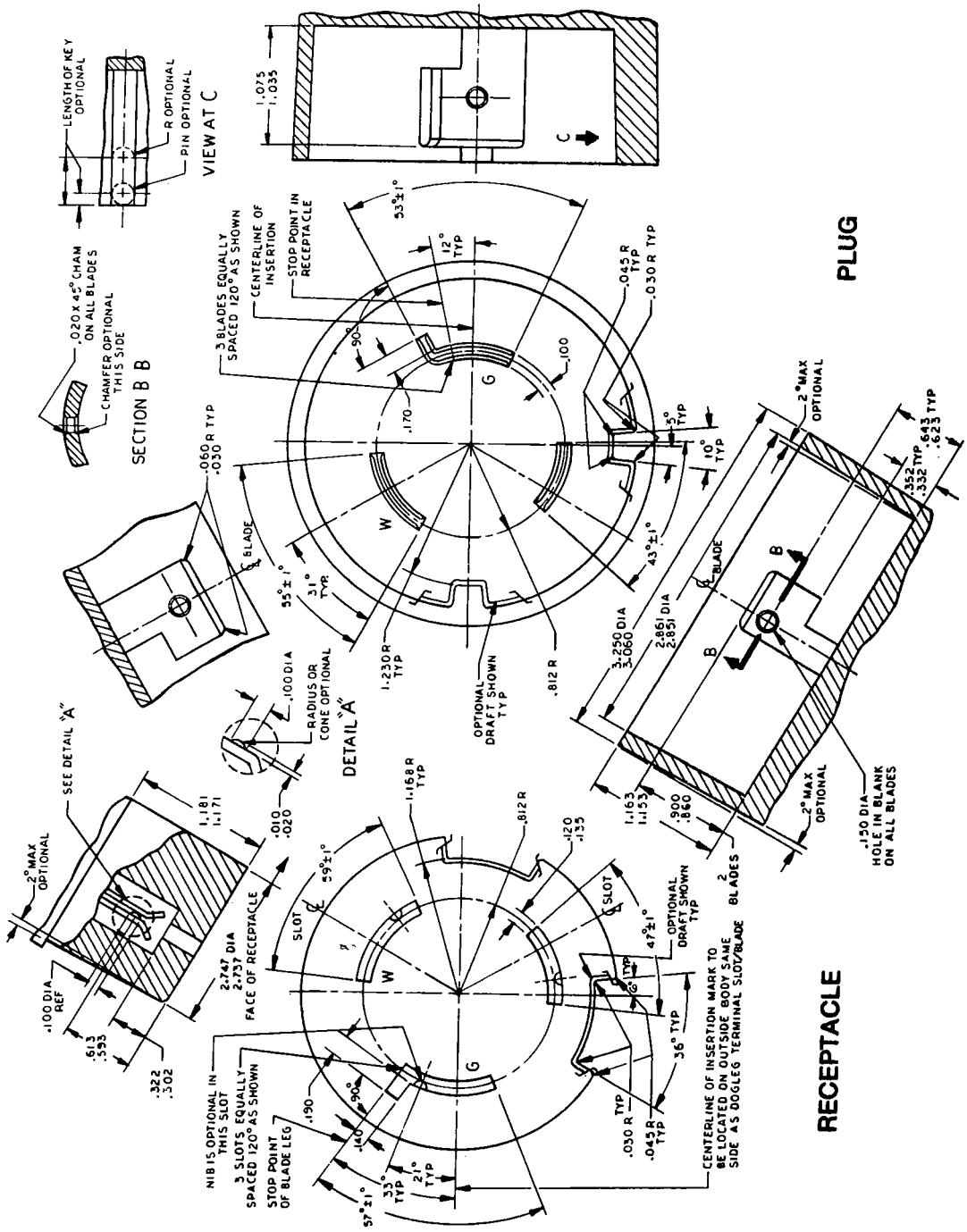

Figure L7-50
LOCKING TYPE PLUG AND RECEPTACLE
277 volts ac, 50 amperes, 2 pole, 3 wire, grounding type
NEMA Strandard 11-3-1983.

Copyright National Electrical Manufacturers Association
Provided by IHS under license with NEMA
No reproduction or networking permitted without license from IHS

Not for Resale

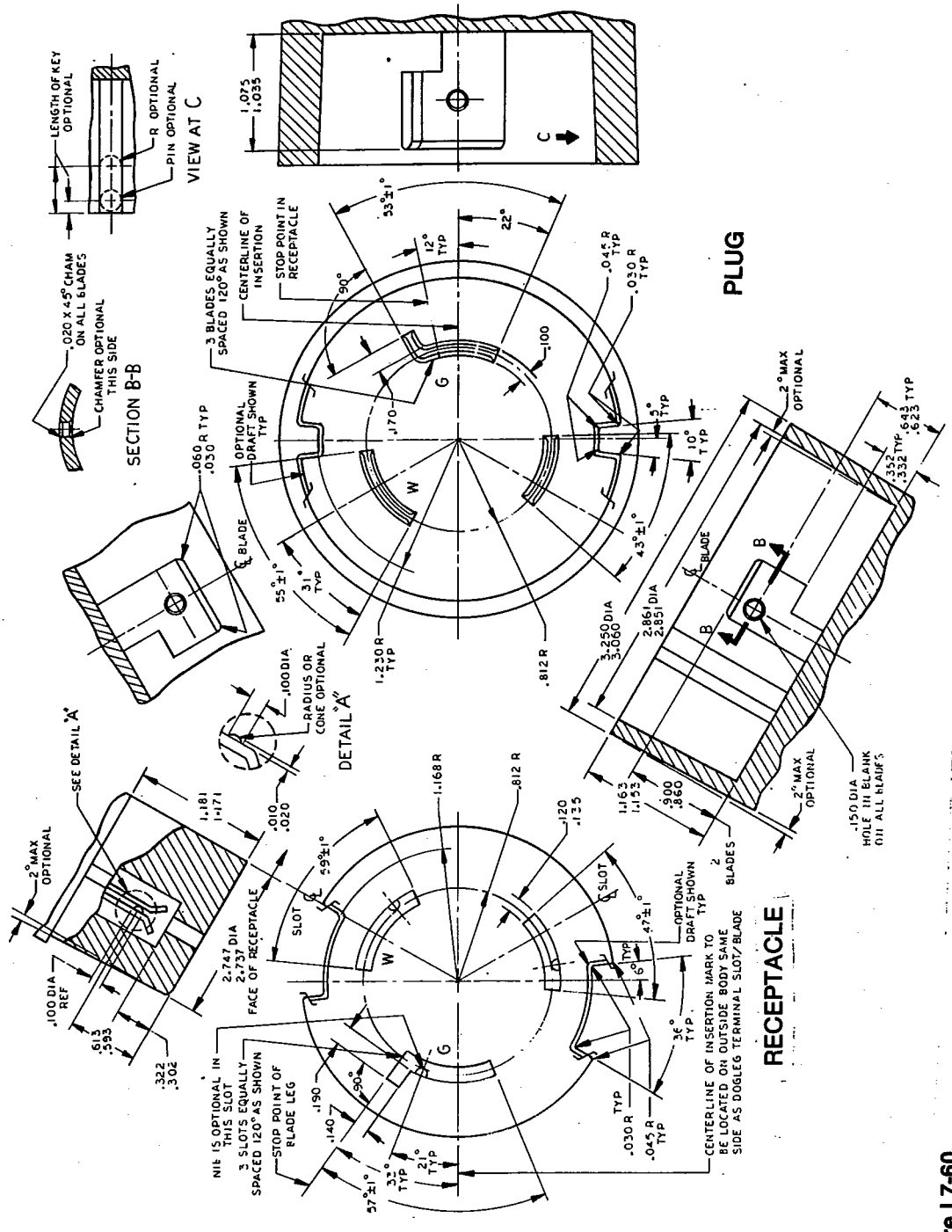

Figure L7-60
LOCKING TYPE PLUG AND RECEPTACLE—
277 volts ac, 60 amperes, 2 pole, 3 wire, grounding type
NEMA Standard 11-3-1983.

Copyright National Electrical Manufacturers Association
Provided by IHS under license with NEMA
No reproduction or networking permitted without license from IHS

Not for Resale

Figure L8-20
LOCKING TYPE PLUG AND RECEPTACLE
480 volts ac, 20 amperes, 2 pole, 3 wire, grounding type

NEMA Standard 11-3-1983.

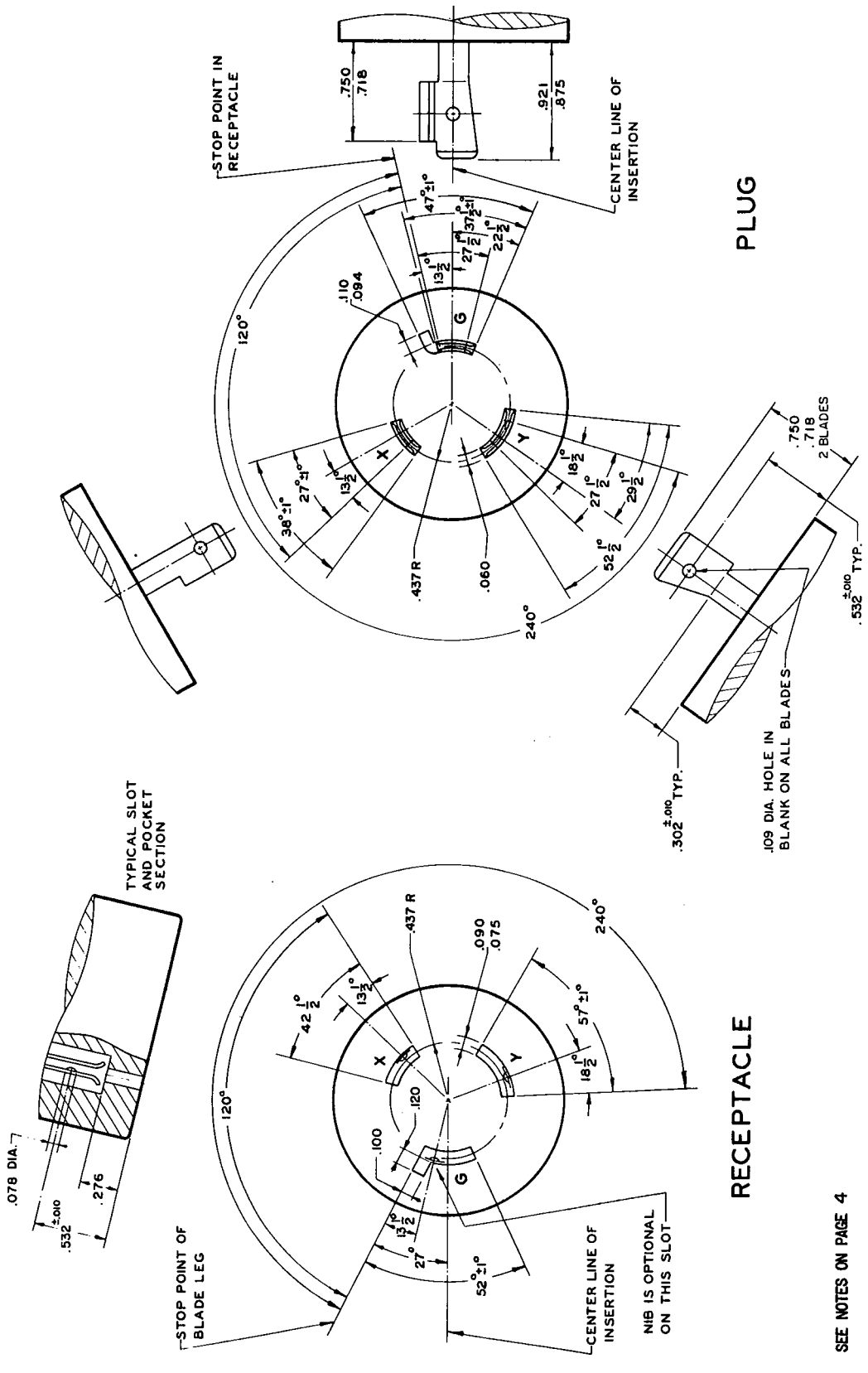

SEE NOTES ON PAGE 4

Copyright National Electrical Manufacturers Association
Provided by IHS under license with NEMA
No reproduction or networking permitted without license from IHS

Not for Resale

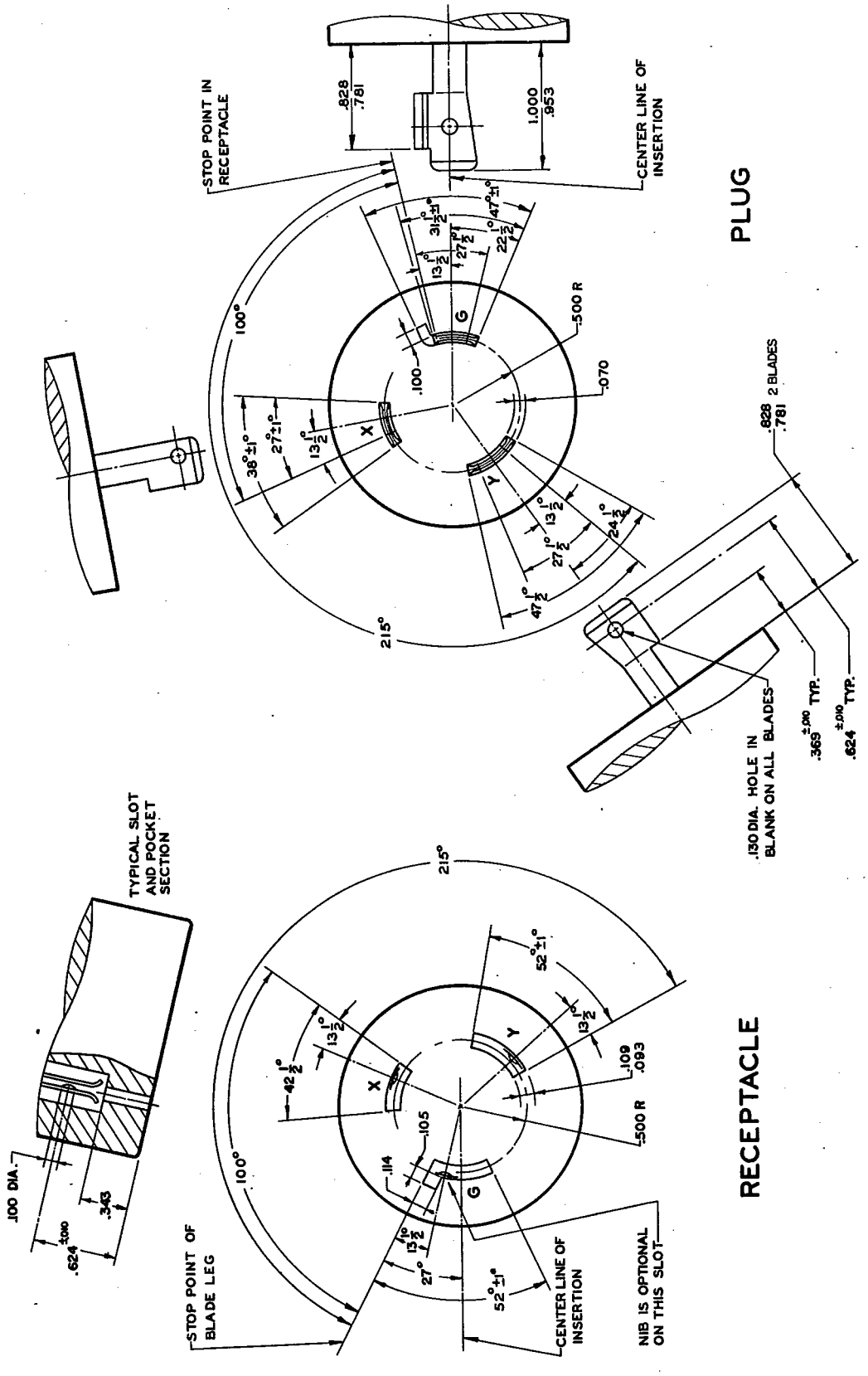

Figure L8-30
LOCKING TYPE PLUG AND RECEPTACLE
480 volts ac, 30 amperes, 2 pole, 3 wire, grounding type

NEMA Standard 11-3-1983.

Copyright National Electrical Manufacturers Association
Provided by IHS under license with NEMA
No reproduction or networking permitted without license from IHS

Not for Resale

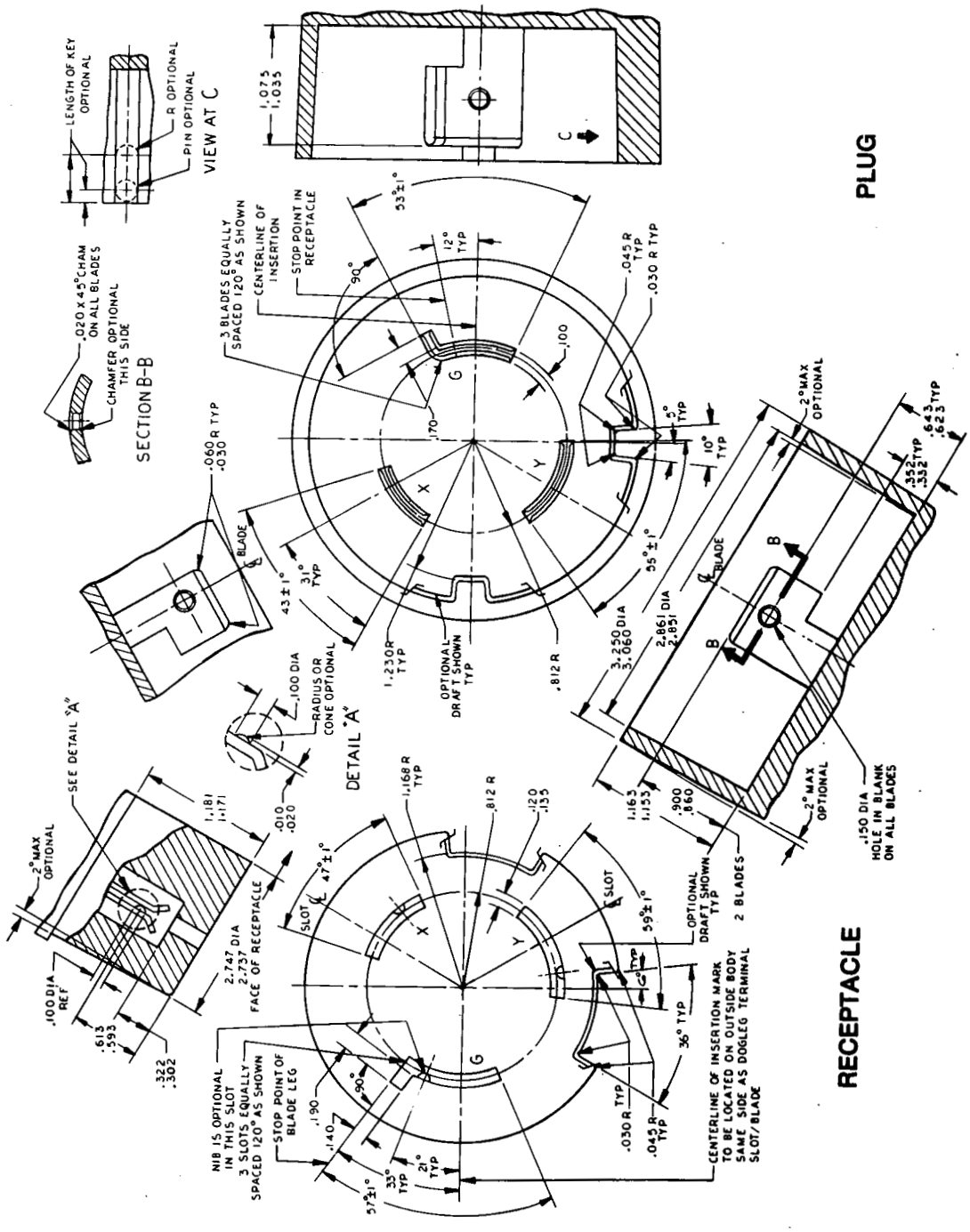

Figure L8-50
LOCKING TYPE PLUG AND RECEPTACLE
480 volts ac, 50 amperes, 2 pole, 3 wire, grounding type
NEMA Standard 11-3-1983.

Copyright National Electrical Manufacturers Association
Provided by IHS under license with NEMA
No reproduction or networking permitted without license from IHS

Not for Resale

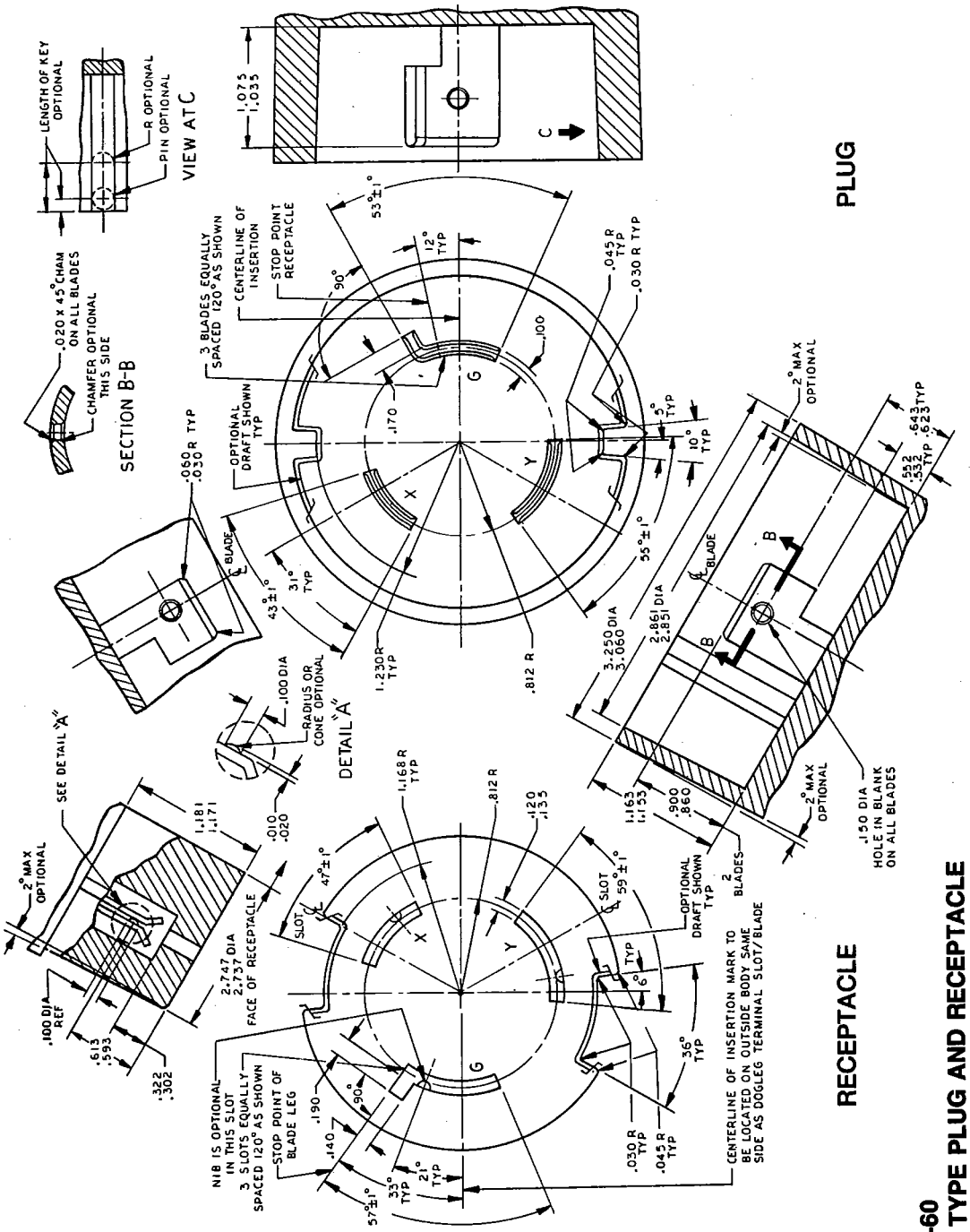

Figure L8-60
LOCKING TYPE PLUG AND RECEPTACLE
480 volts ac, 60 amperes, 2 pole, 3 wire, grounding type

NEMA Standard 11-3-1983.

Copyright National Electrical Manufacturers Association
Provided by IHS under license with NEMA
No reproduction or networking permitted without license from IHS

Not for Resale

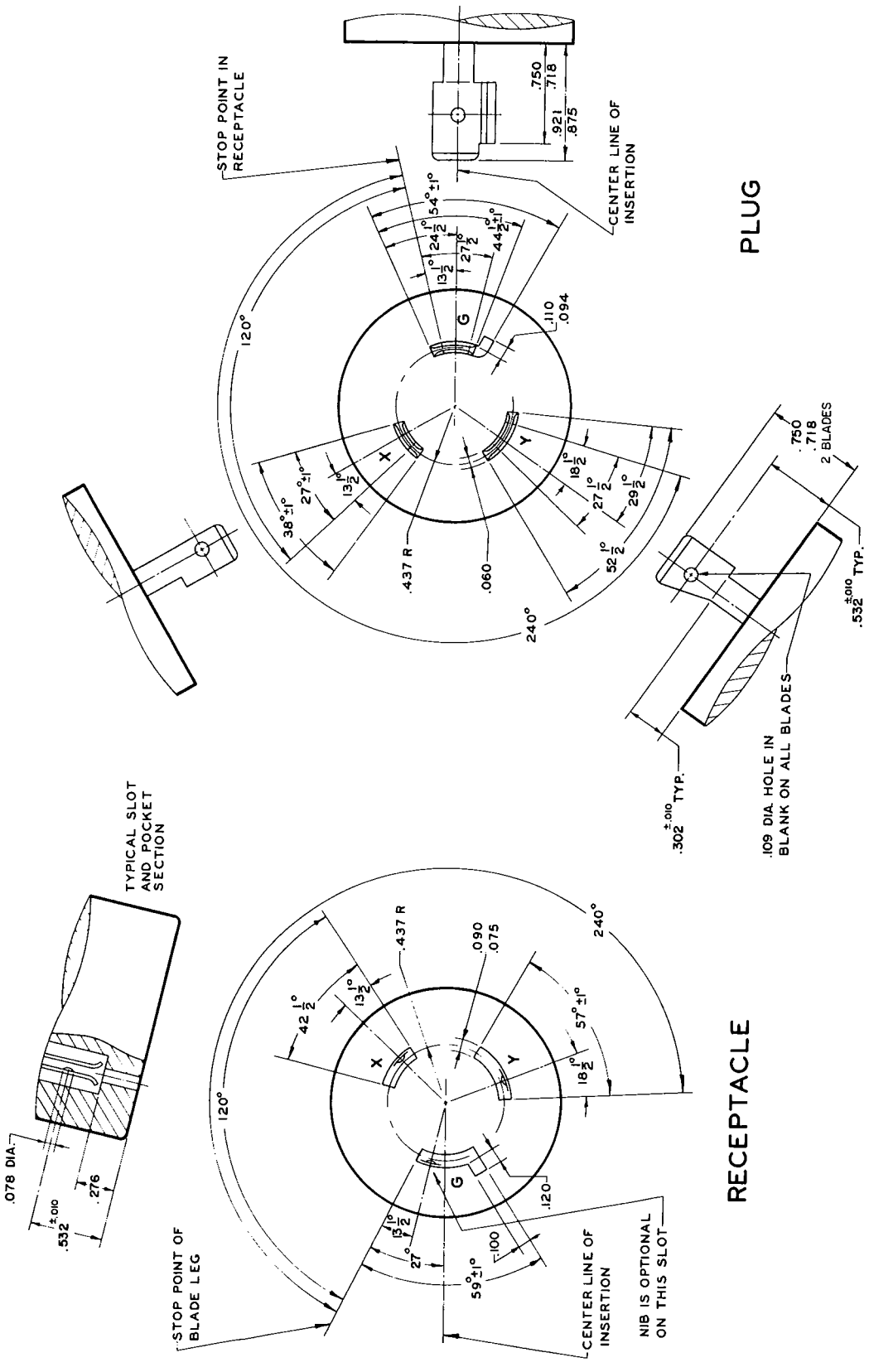

Figure L9-20
LOCKING TYPE PLUG AND RECEPTACLE
600 volts ac, 20 amperes, 2 pole, 3 wire, grounding type
NEMA Standard 11-3-1983.

Copyright National Electrical Manufacturers Association
Provided by IHS under license with NEMA
No reproduction or networking permitted without license from IHS

Not for Resale

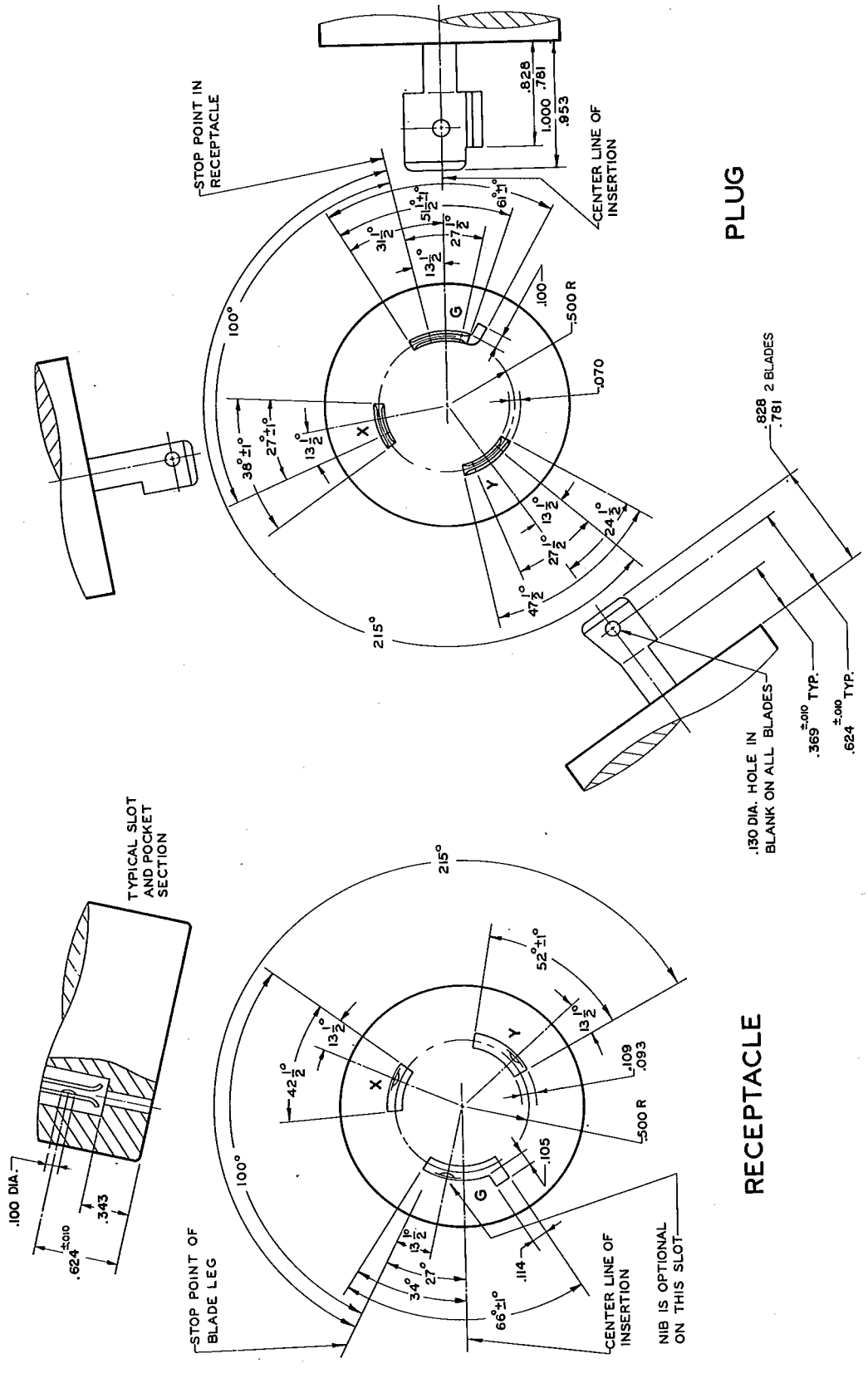

Figure L9-30
LOCKING TYPE PLUG AND RECEPTACLE
600 volts ac, 30 amperes, 2 pole, 3 wire, grounding type
NEMA Standard 11-3-1983.

Copyright National Electrical Manufacturers Association
Provided by IHS under license with NEMA
No reproduction or networking permitted without license from IHS

Not for Resale

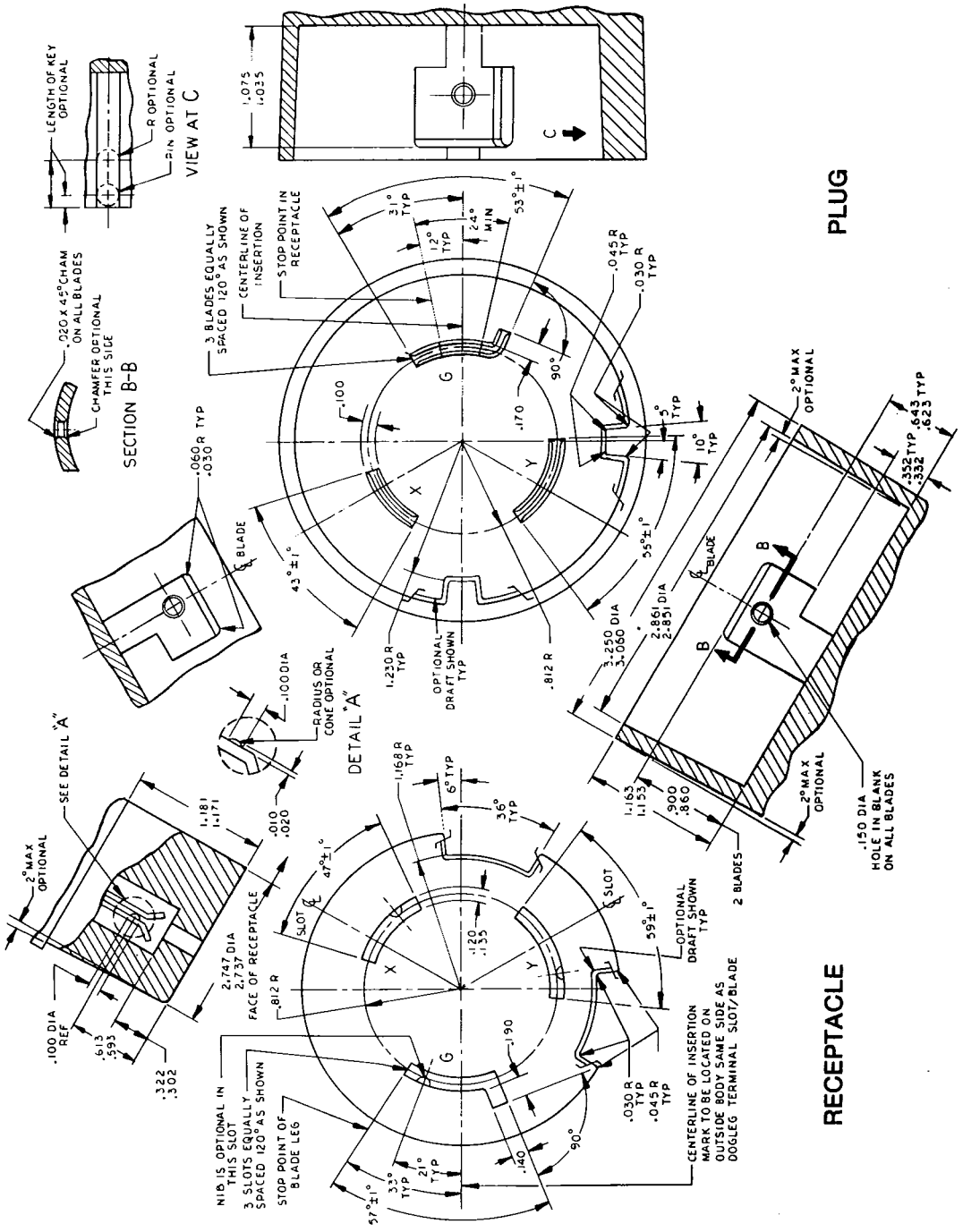

Figure L9-50
LOCKING TYPE PLUG AND RECEPTACLE
600 volts ac, 50 amperes, 2 pole, 3 wire, grounding type
NEMA Standard 11-3-1983.

Copyright National Electrical Manufacturers Association
Provided by IHS under license with NEMA
No reproduction or networking permitted without license from IHS

Not for Resale

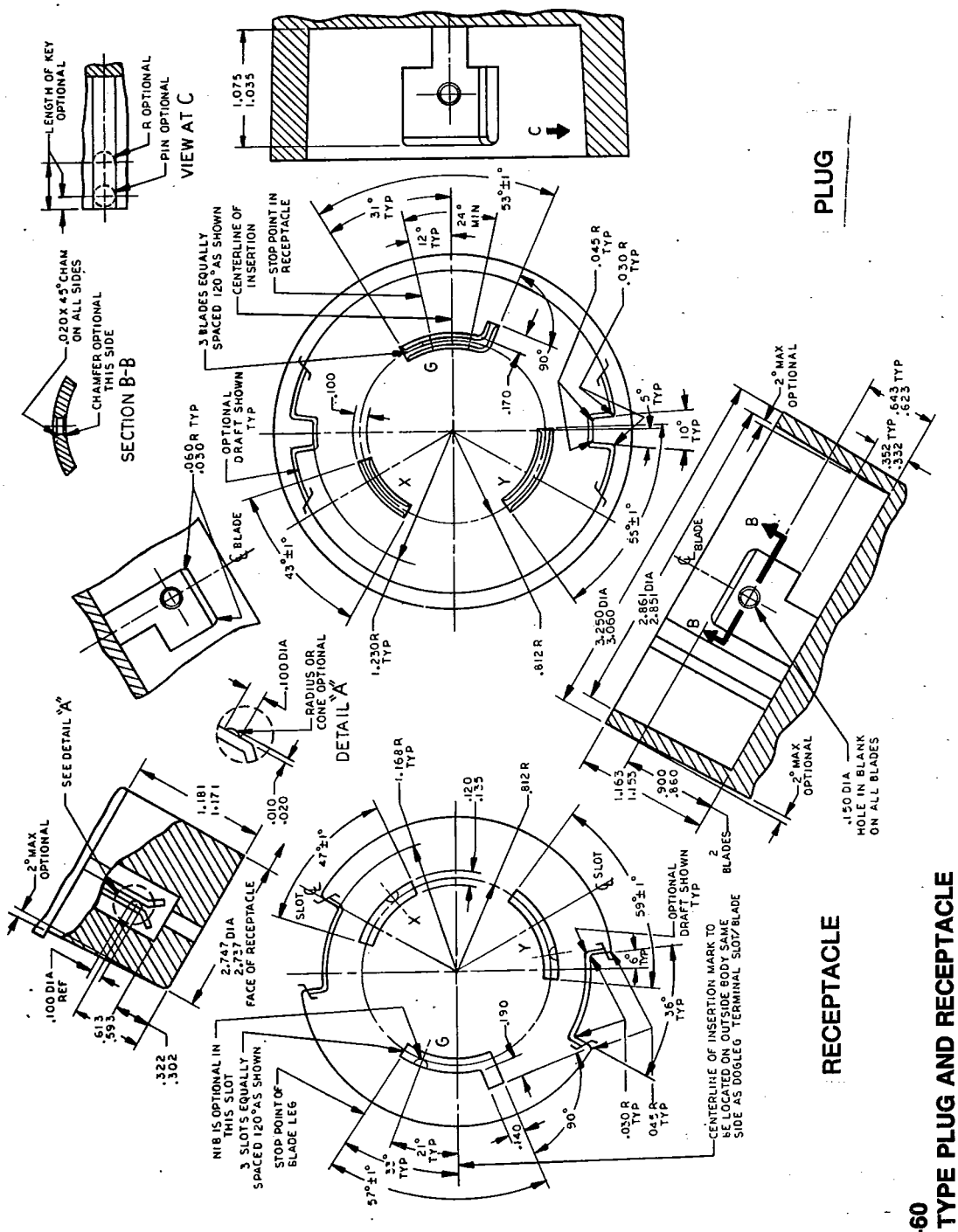

Figure L9-60
LOCKING TYPE PLUG AND RECEPTACLE
600 volts ac, 60 amperes, 2 pole, 3 wire, grounding type

NEMA Standard 11-3-1983.

Copyright National Electrical Manufacturers Association
Provided by IHS under license with NEMA
No reproduction or networking permitted without license from IHS

Not for Resale

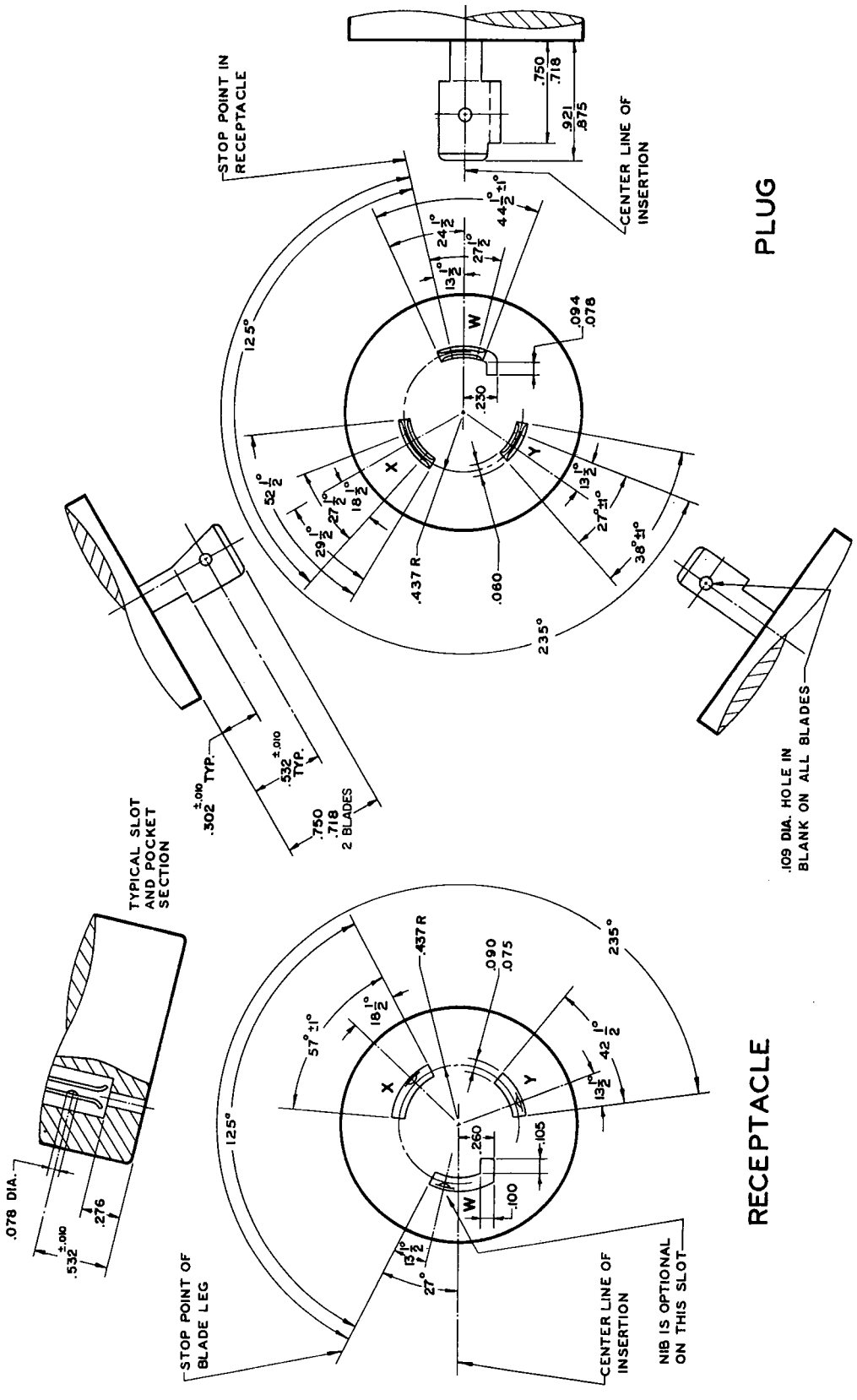

Figure L10-20
LOCKING TYPE PLUG AND RECEPTACLE
125/250 volts, 20 amperes, 3 pole, 3 wire
NEMA Standard 11-3-1983.

Copyright National Electrical Manufacturers Association
Provided by IHS under license with NEMA
No reproduction or networking permitted without license from IHS

Not for Resale

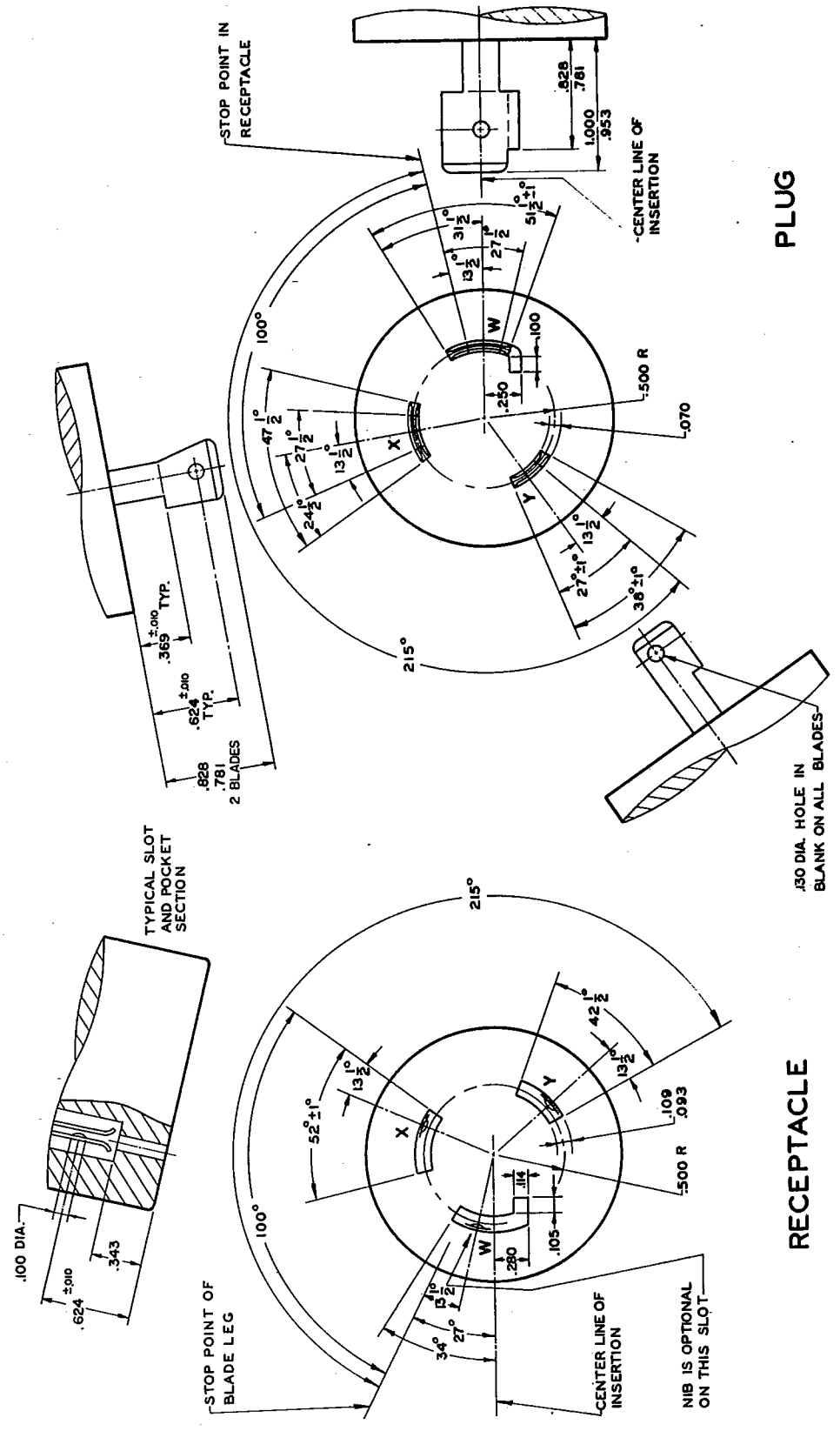

Figure L10-30
LOCKING TYPE PLUG AND RECEPTACLE
125/250 volts, 30 amperes, 3 pole, 3 wire
NEMA Standard 11-3-1983.

Copyright National Electrical Manufacturers Association
Provided by IHS under license with NEMA
No reproduction or networking permitted without license from IHS

Not for Resale

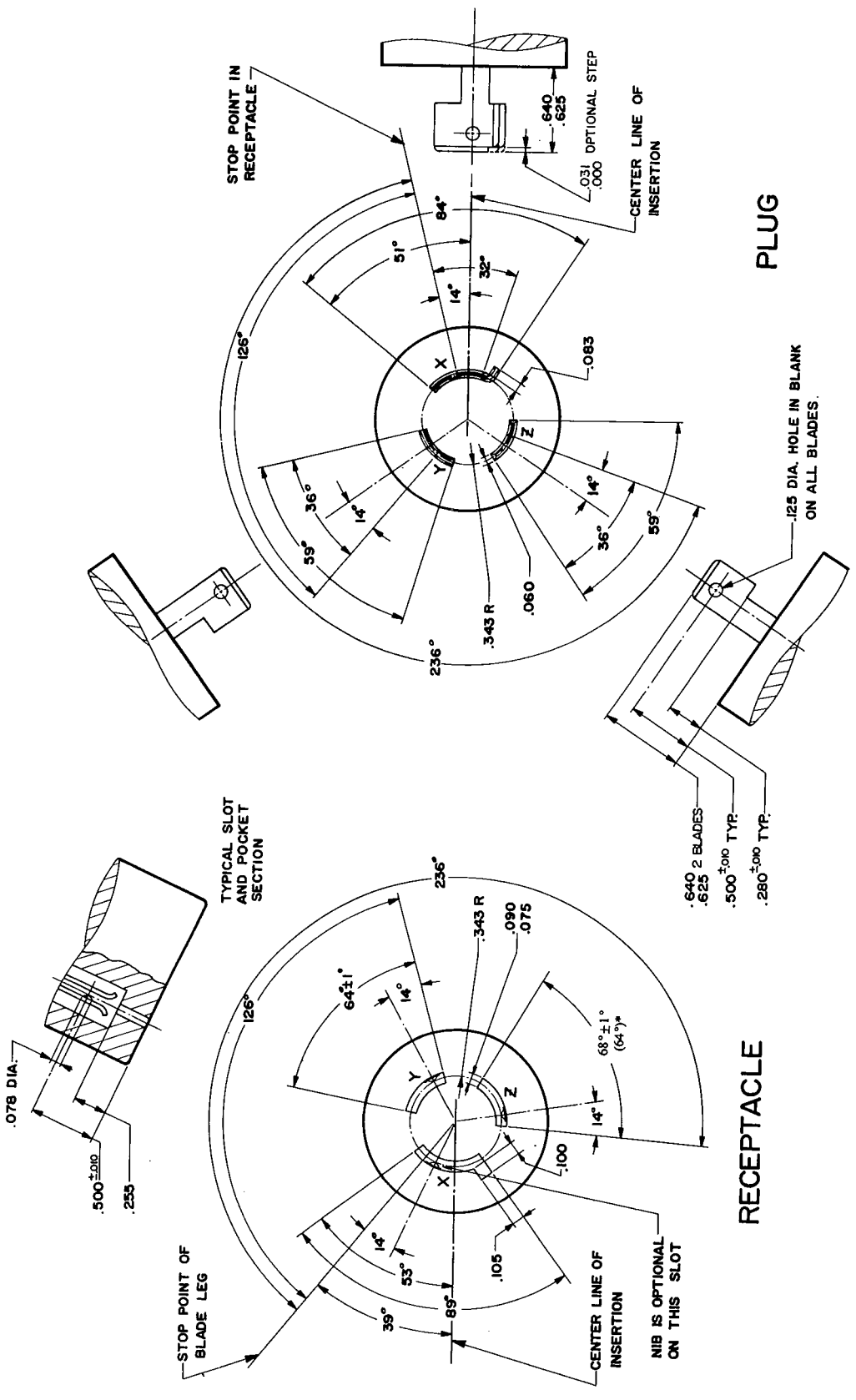

Figure L11-15
LOCKING TYPE PLUG AND RECEPTACLE
250 volts, 15 amperes, 3 phase, 3 pole, 3 wire
NEMA Standard 11-3-1983.
* Suggested Standard for Future Design 11-3-1983.

Copyright National Electrical Manufacturers Association
Provided by IHS under license with NEMA
No reproduction or networking permitted without license from IHS

Not for Resale

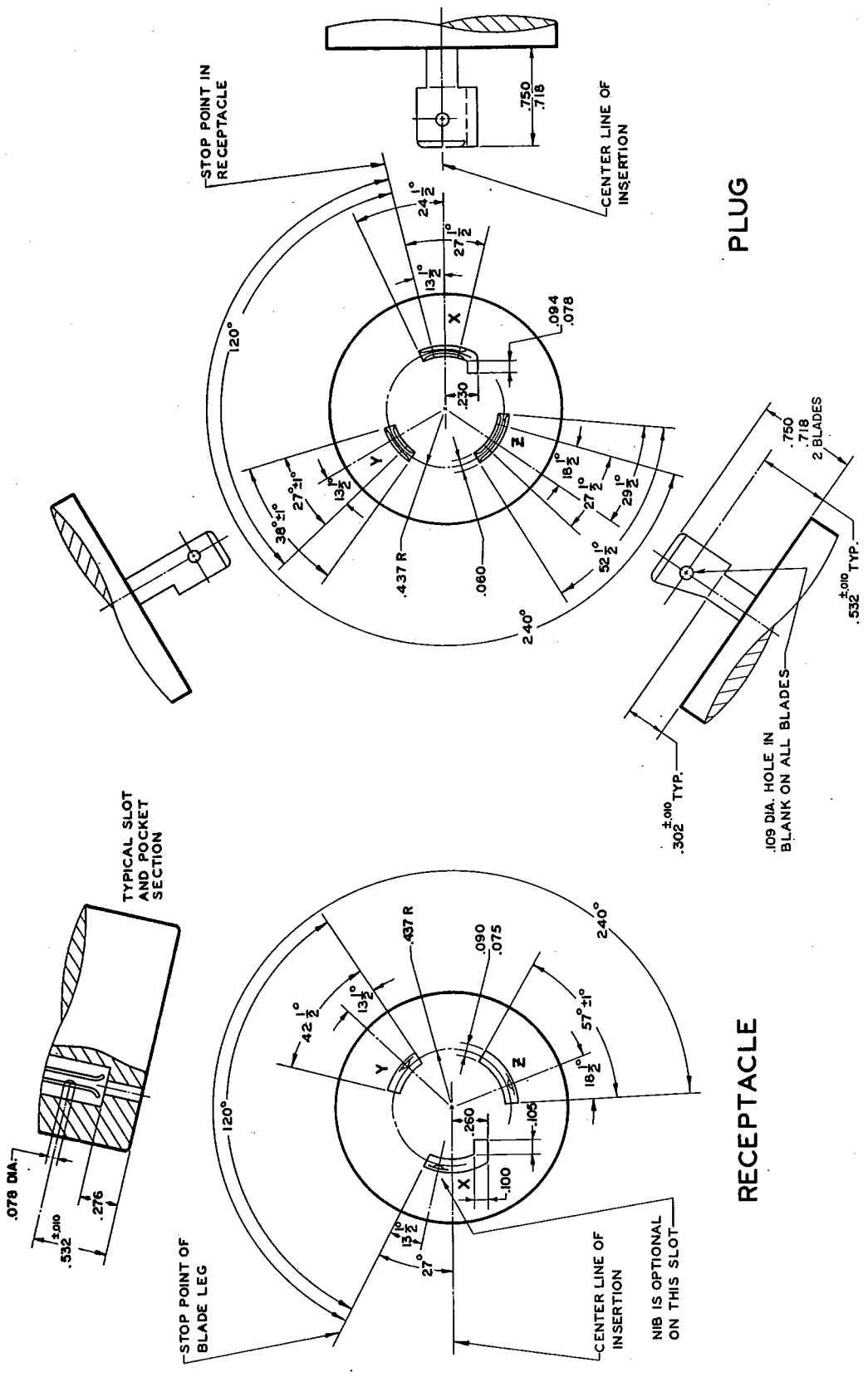

Figure L11-20
LOCKING TYPE PLUG AND RECEPTACLE
250 volts, 20 amperes, 3 phase, 3 pole, 3 wire
NEMA Standard 11-3-1983.

Copyright National Electrical Manufacturers Association
Provided by IHS under license with NEMA
No reproduction or networking permitted without license from IHS

Not for Resale

Copyright National Electrical Manufacturers Association
Provided by IHS under license with NEMA
No reproduction or networking permitted without license from IHS
Not for Resale

Figure L11-30
LOCKING TYPE PLUG AND RECEPTACLE
250 volts, 30 amperes, 3 phase, 3 pole, 3 wire
NEMA Standard 11-3-1983.

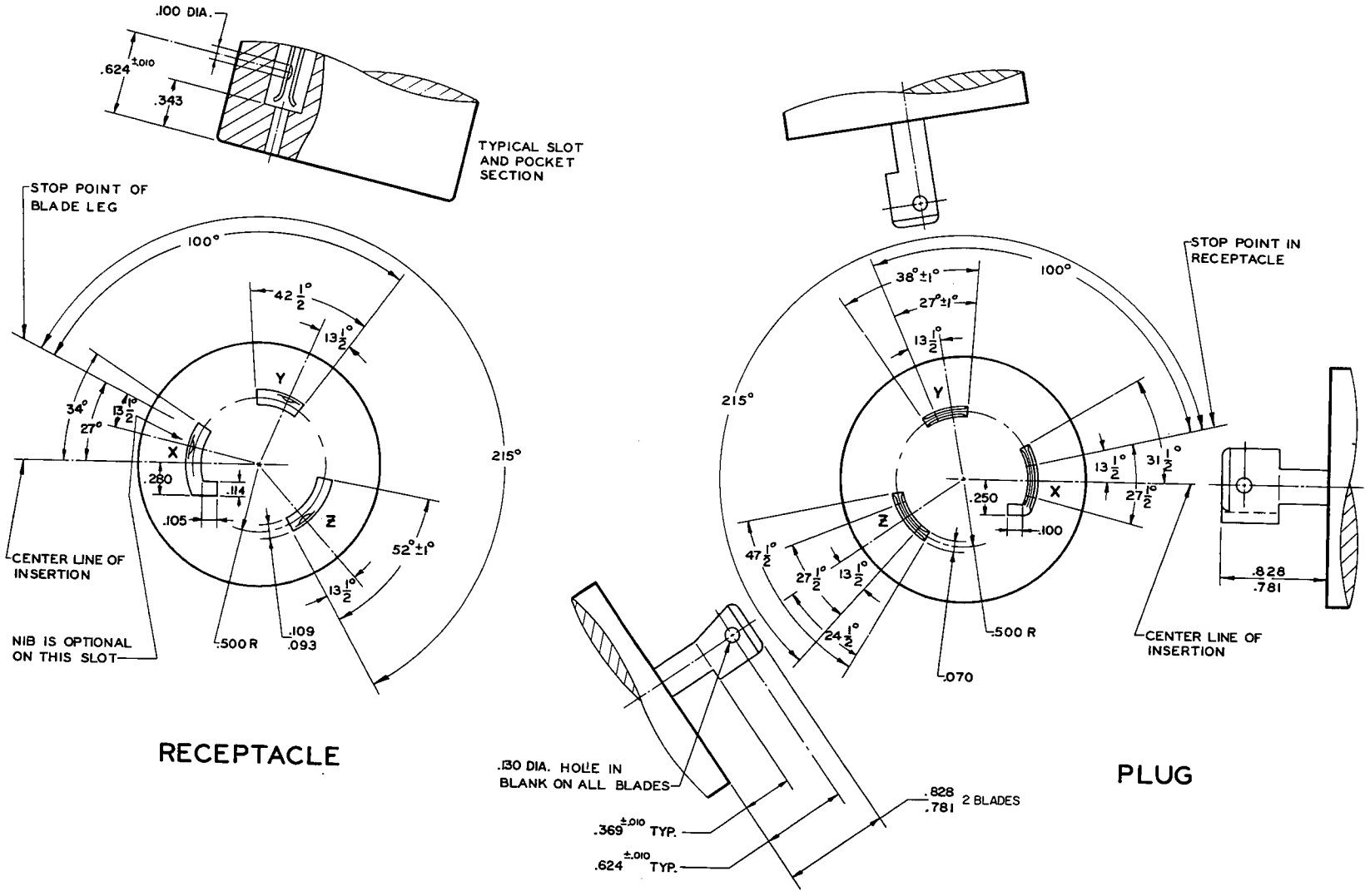

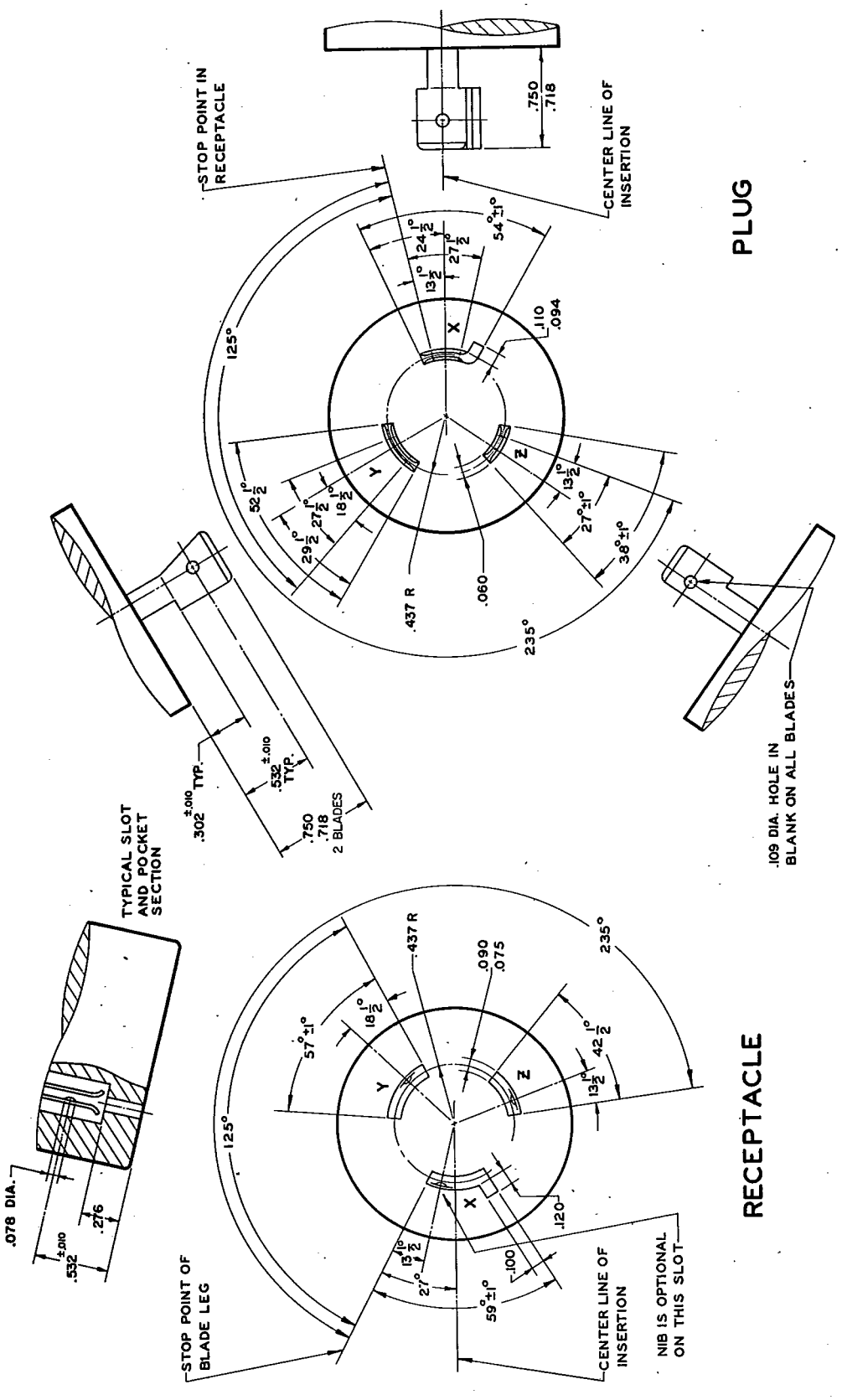

Figure L12-20
LOCKING TYPE PLUG AND RECEPTACLE
480 volts, 20 amperes, 3 phase, 3 pole, 3 wire
NEMA Standard 11-3-1983.

Copyright National Electrical Manufacturers Association
Provided by IHS under license with NEMA
No reproduction or networking permitted without license from IHS

Not for Resale

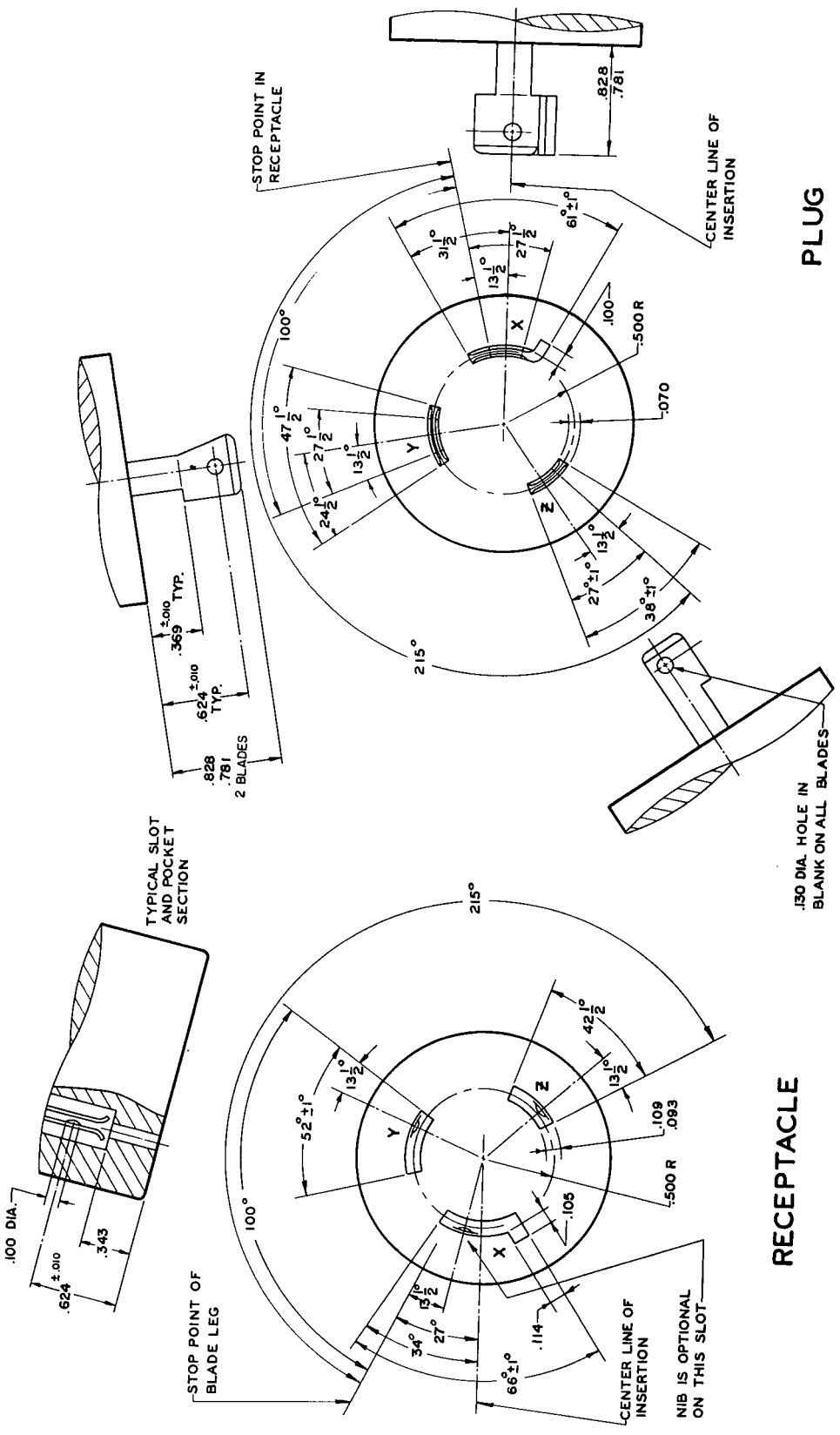

Figure L12-30
LOCKING TYPE PLUG AND RECEPTACLE
480 volts, 30 amperes, 3 phase, 3 pole, 3 wire
NEMA Standard 11-3-1983.

Copyright National Electrical Manufacturers Association
Provided by IHS under license with NEMA
No reproduction or networking permitted without license from IHS

Not for Resale

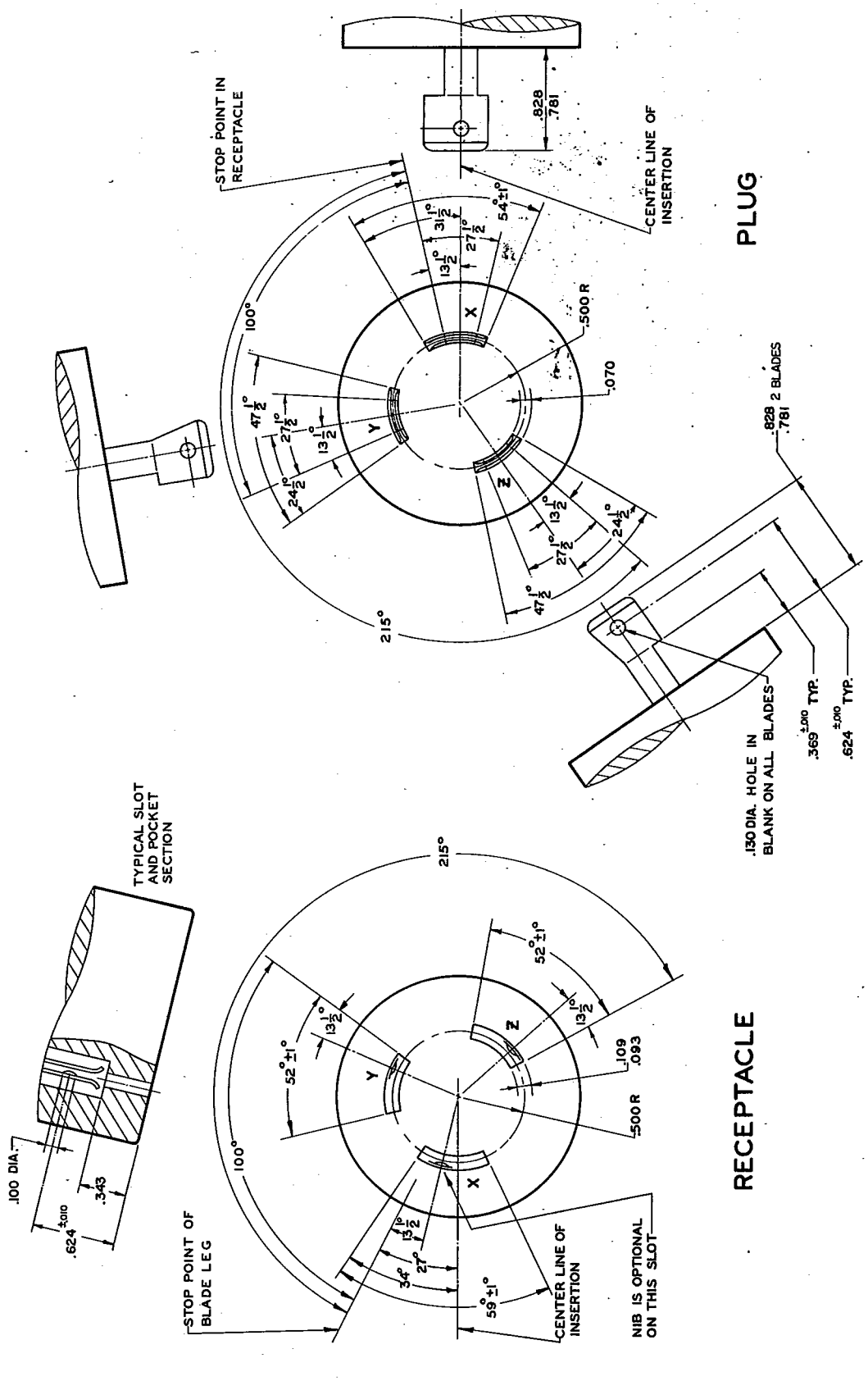

Figure L13-30
LOCKING TYPE PLUG AND RECEPTACLE
600 volts, 30 amperes, 3 phase, 3 pole, 3 wire
NEMA Standard 11-3-1983.

Copyright National Electrical Manufacturers Association
Provided by IHS under license with NEMA
No reproduction or networking permitted without license from IHS

Not for Resale

Copyright National Electrical Manufacturers Association
Provided by IHS under license with NEMA
No reproduction or networking permitted without license from IHS
Not for Resale

Figure L14-20
LOCKING TYPE PLUG AND RECEPTACLE
125/250 volts, 20 amperes, 3 pole, 4 wire, grounding type
NEMA Standard 11-3-1983.

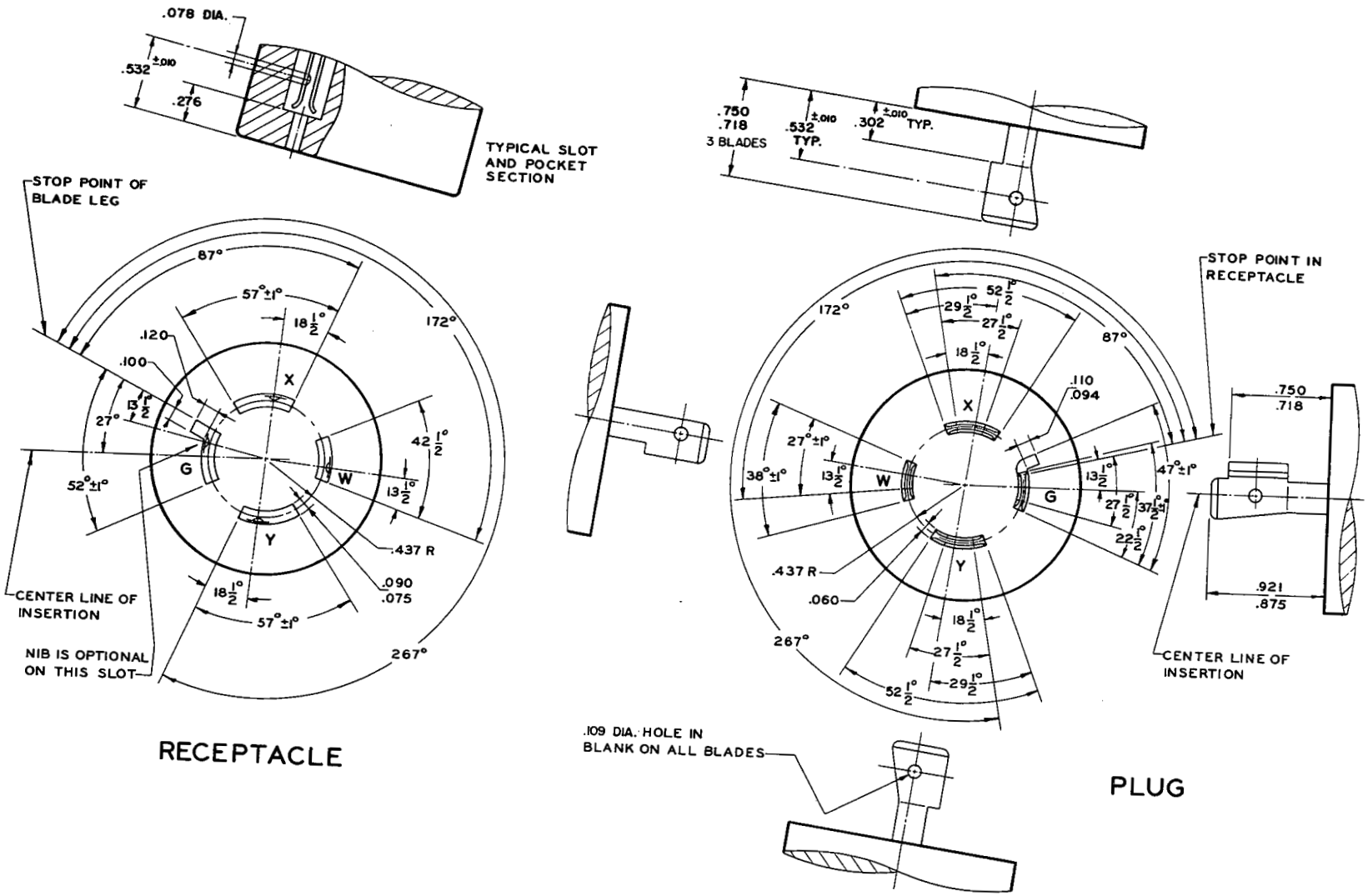

6470247 0007005 2

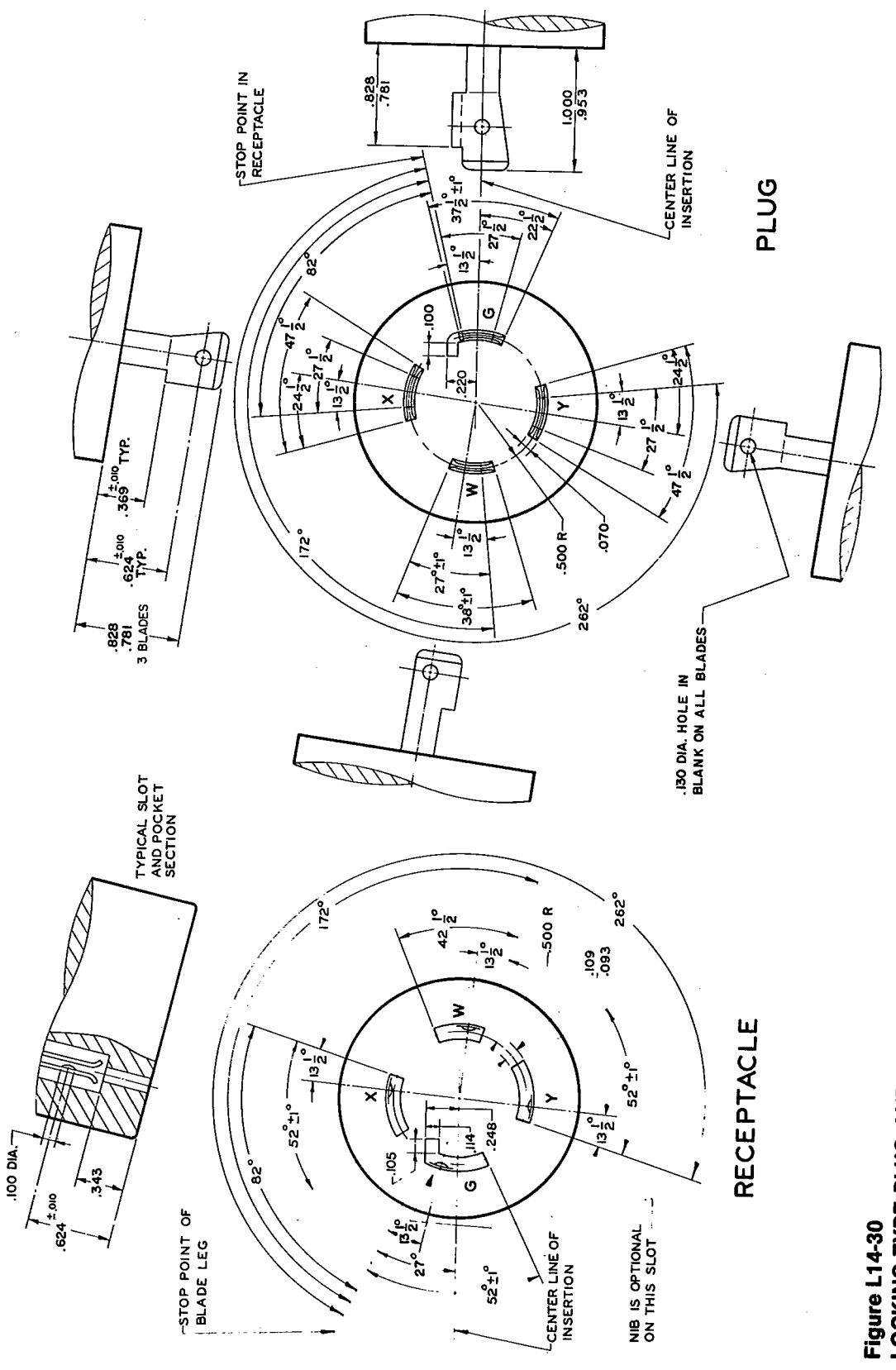

Figure L14-30
LOCKING TYPE PLUG AND RECEPTACLE
125/250 volts, 30 amperes, 3 pole, 4 wire, grounding type
NEMA Standard 11-3-1983.

Copyright National Electrical Manufacturers Association
Provided by IHS under license with NEMA
No reproduction or networking permitted without license from IHS

Not for Resale

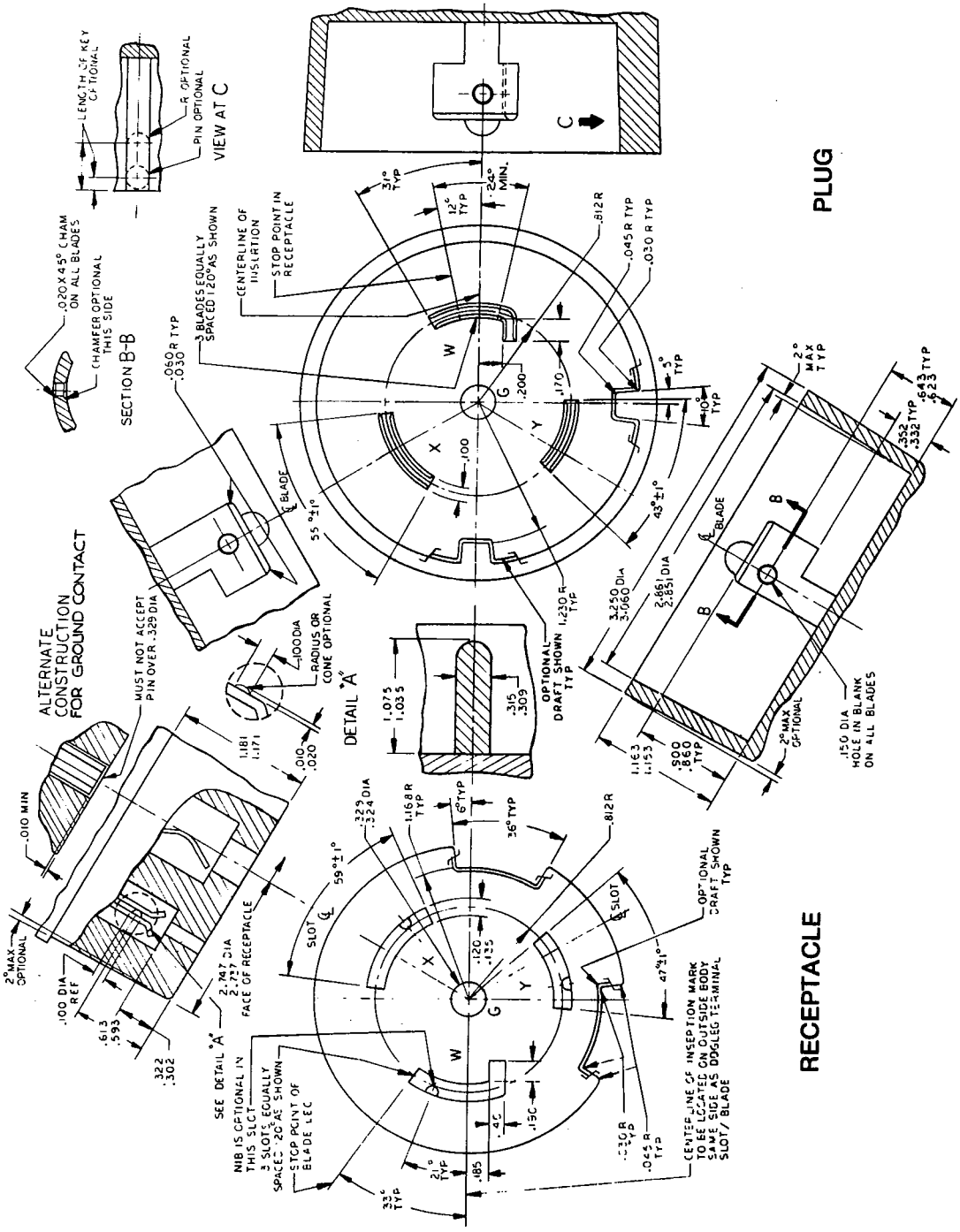

Figure L14-50
LOCKING TYPE PLUG AND RECEPTACLE
125/250 volts, 50 amperes, 3 pole, 4 wire, grounding type
NEMA Standard 11-3-1983.

Copyright National Electrical Manufacturers Association
Provided by IHS under license with NEMA
No reproduction or networking permitted without license from IHS
Not for Resale

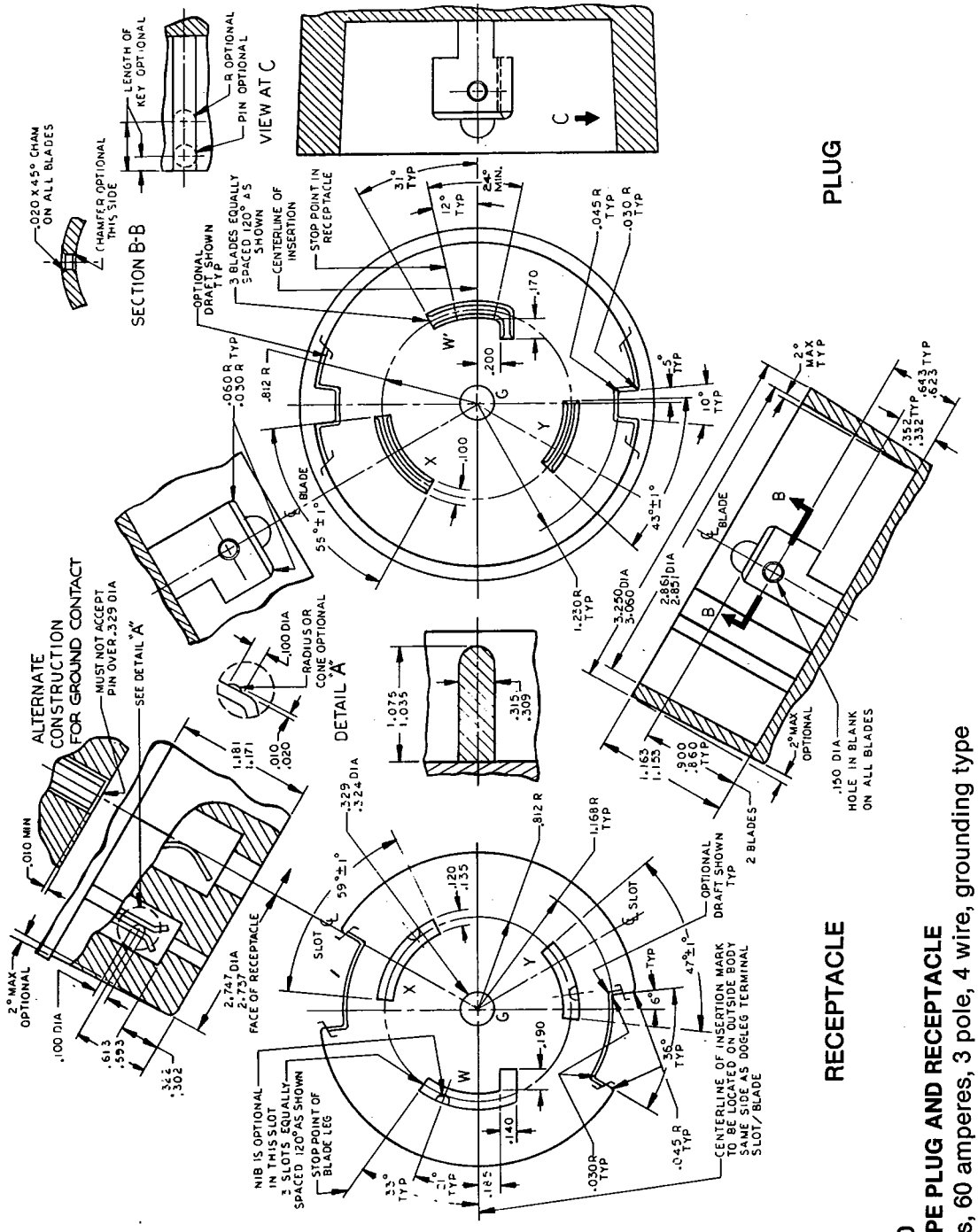

Figure L14-60
LOCKING TYPE PLUG AND RECEPTACLE
125/250 volts, 60 amperes, 3 pole, 4 wire, grounding type
NEMA Standard 11-3-1983

Copyright National Electrical Manufacturers Association
Provided by IHS under license with NEMA
No reproduction or networking permitted without license from IHS

Not for Resale

Copyright National Electrical Manufacturers Association
Provided by IHS under license with NEMA
No reproduction or networking permitted without license from IHS
Not for Resale

Figure L15-20
LOCKING TYPE PLUG AND RECEPTACLE
250 volts, 20 amperes, 3 phase, 3 pole, 4 wire, grounding type
NEMA Standard 11-3-1983.

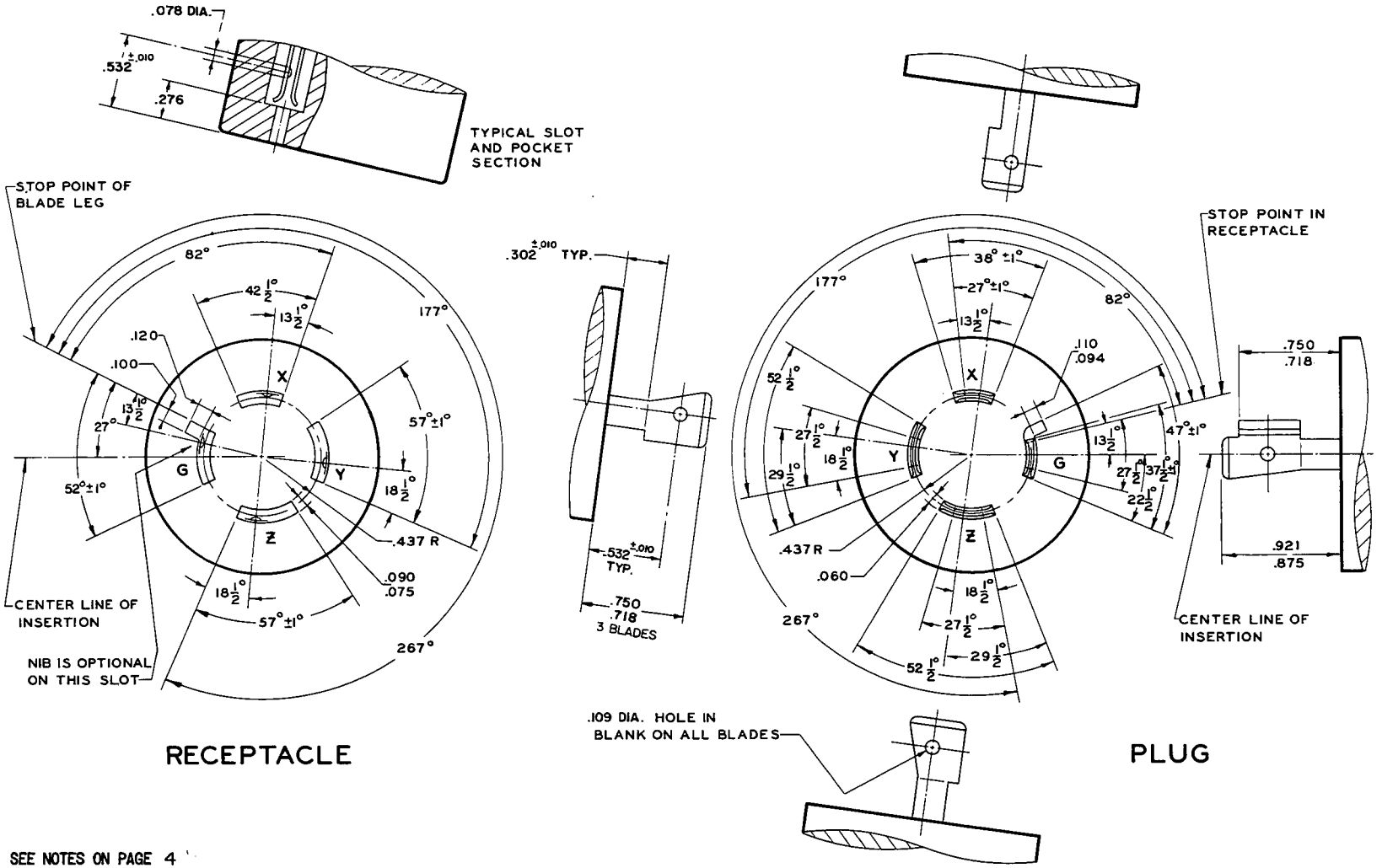

RECEPTACLE

PLUG

SEE NOTES ON PAGE 4

WD 6-88
6470247 0007009 T

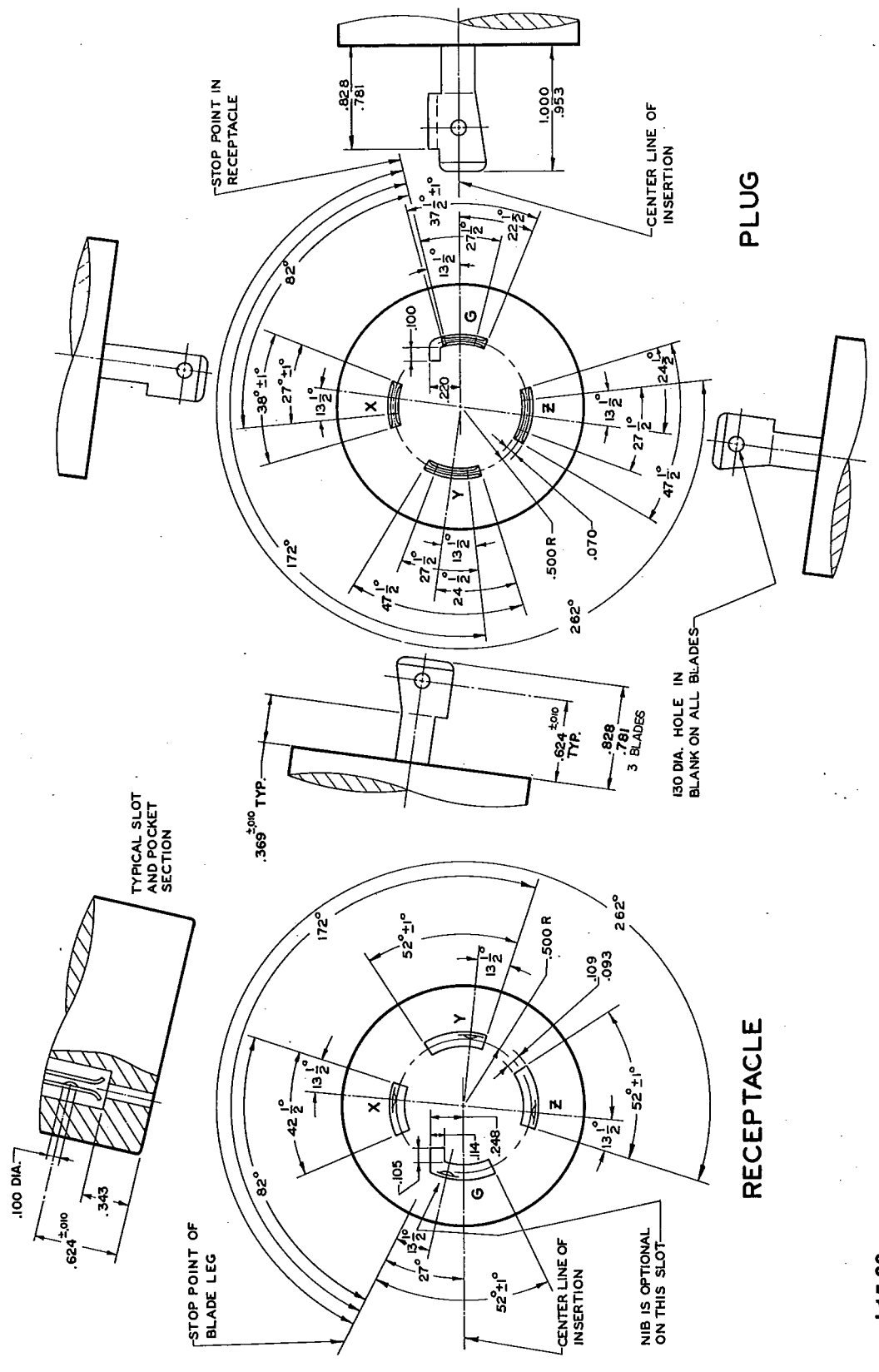

Figure L15-30
LOCKING TYPE PLUG AND RECEPTACLE
250 volts, 30 amperes, 3 phase, 3 pole, 4 wire, grounding type
NEMA Standard 11-3-1983.

Copyright National Electrical Manufacturers Association
Provided by IHS under license with NEMA
No reproduction or networking permitted without license from IHS

Not for Resale

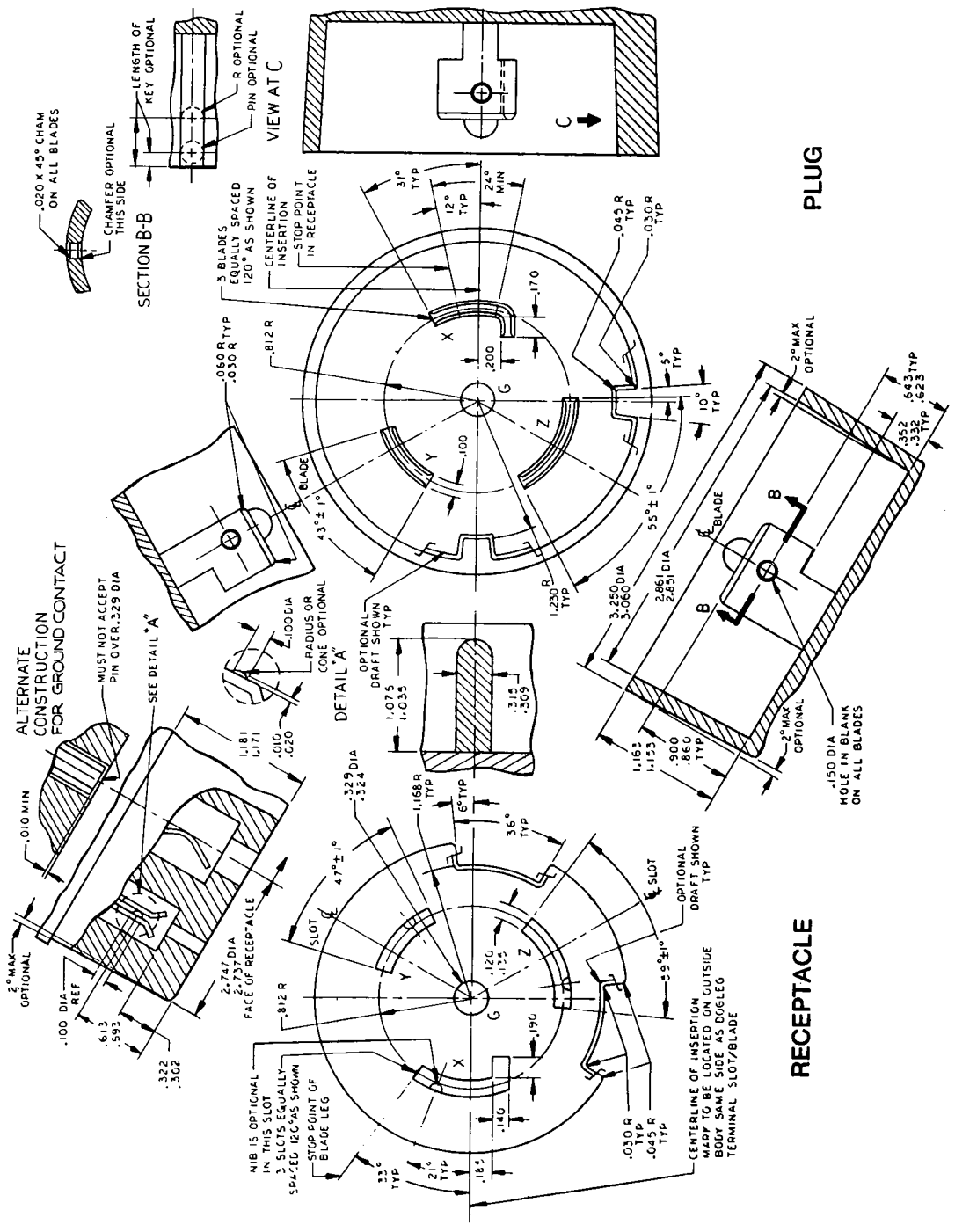

Figure L15-50
LOCKING TYPE PLUG AND RECEPTACLE
250 volts, 50 amperes, 3 phase, 4 wire, grounding type
NEMA Standard 11-3-1983.

Copyright National Electrical Manufacturers Association
Provided by IHS under license with NEMA
No reproduction or networking permitted without license from IHS
Not for Resale

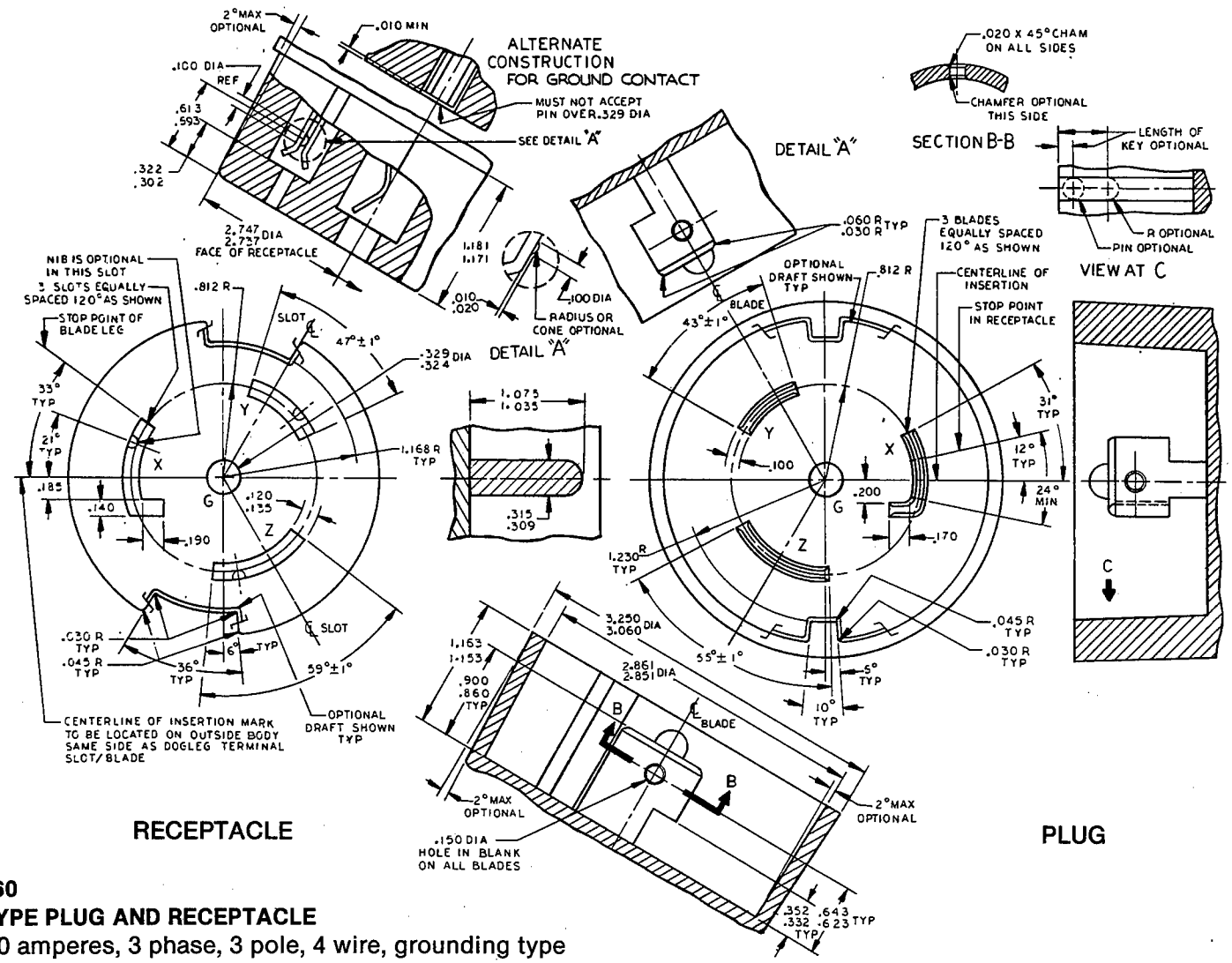

Figure L15-60
LOCKING TYPE PLUG AND RECEPTACLE
250 volts, 60 amperes, 3 phase, 3 pole, 4 wire, grounding type
NEMA Standard 11-3-1983.

Copyright National Electrical Manufacturers Association
Provided by IHS under license with NEMA
No reproduction or networking permitted without license from IHS
Not for Resale

Copyright National Electrical Manufacturers Association
Provided by IHS under license with NEMA
No reproduction or networking permitted without license from IHS

Figure L16-20
LOCKING TYPE PLUG AND RECEPTACLE
480 volts, 20 amperes, 3 phase, 3 pole, 4 wire, grounding type
NEMA Standard 11-3-1983.

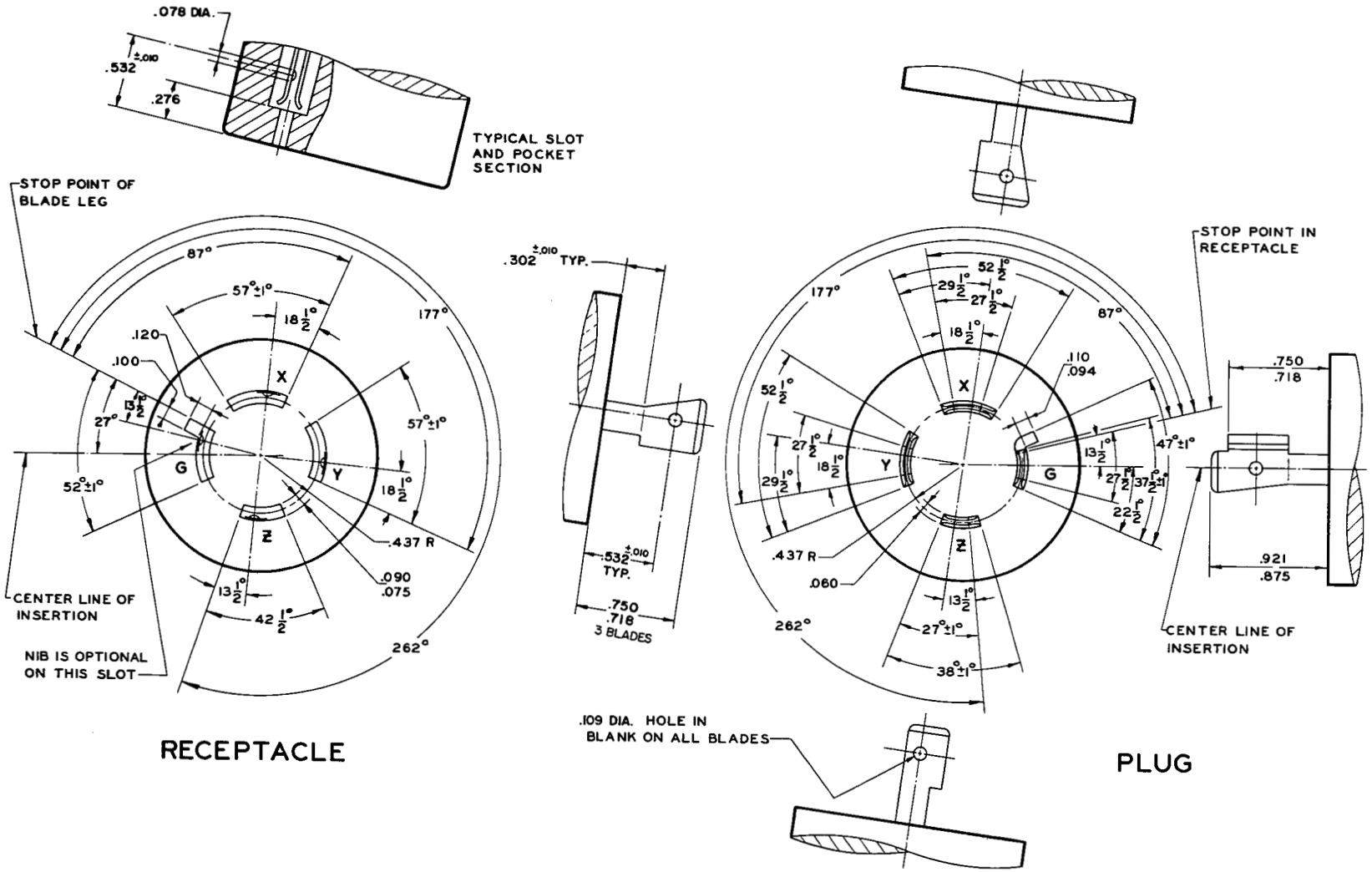

Not for Resale

WD 6-88
4702047 0007013 4

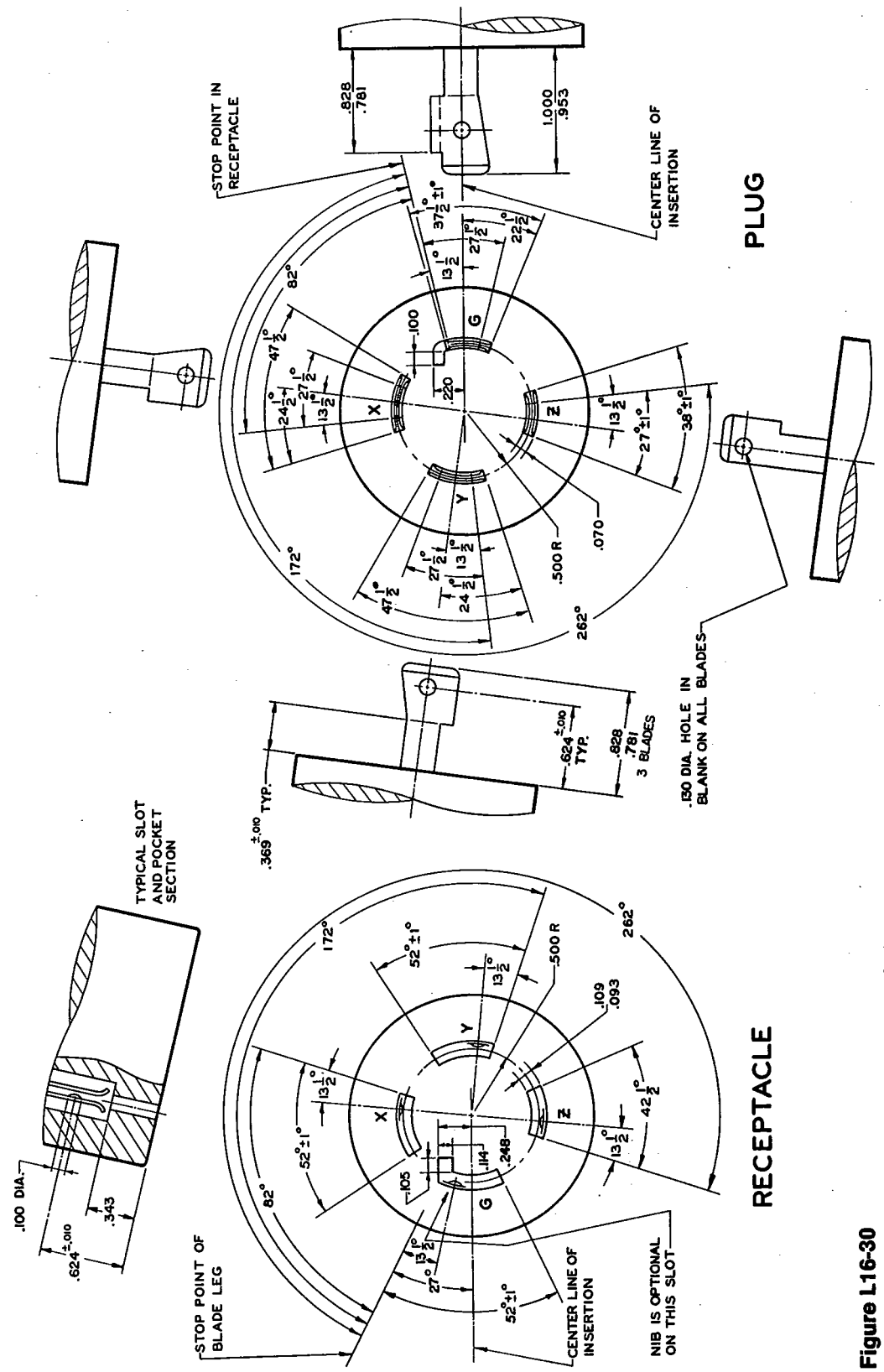

Figure L16-30
LOCKING TYPE PLUG AND RECEPTACLE
480 volts, 30 amperes, 3 phase, 3 pole, 4 wire, grounding type
NEMA Standard 11-3-1983.

Copyright National Electrical Manufacturers Association
Provided by IHS under license with NEMA
No reproduction or networking permitted without license from IHS

Not for Resale

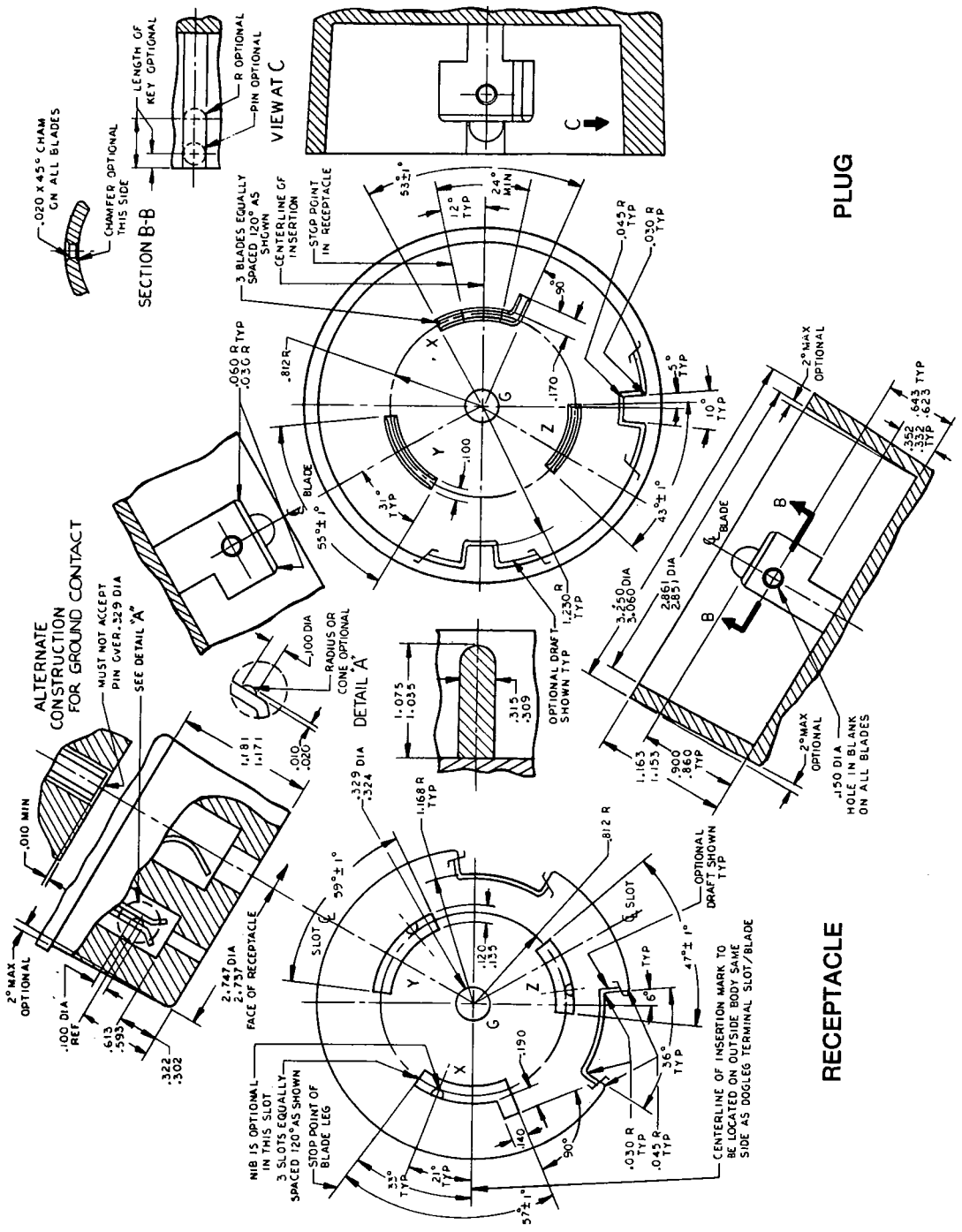

Figure L16-50
LOCKING TYPE PLUG AND RECEPTACLE
480 volts, 50 amperes, 3 phase, 3 pole, 4 wire, grounding type
NEMA Standard 11-3-1983.

Copyright National Electrical Manufacturers Association
Provided by IHS under license with NEMA
No reproduction or networking permitted without license from IHS
Not for Resale

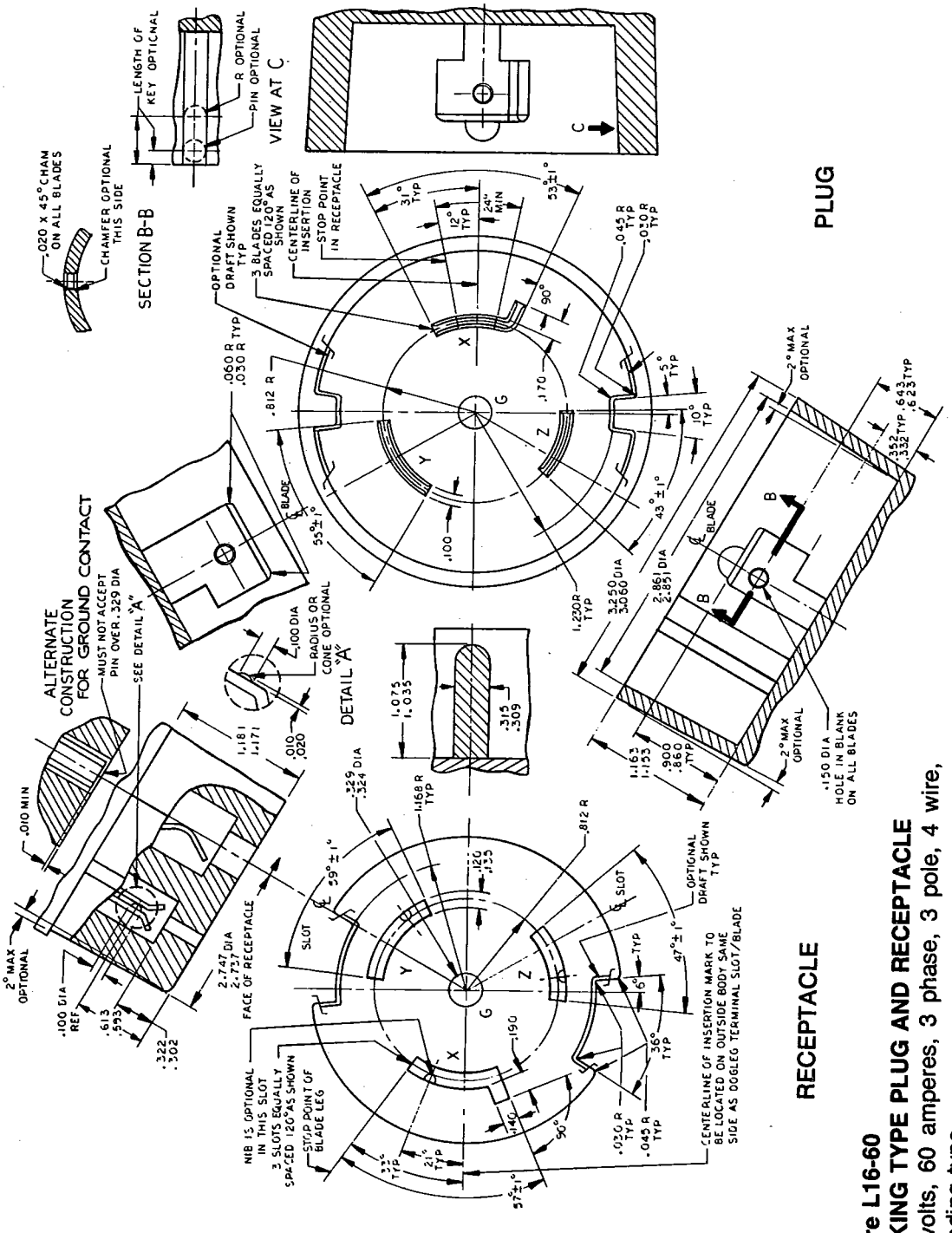

Figure L16-60
LOCKING TYPE PLUG AND RECEPTACLE
480 volts, 60 amperes, 3 phase, 3 pole, 4 wire, grounding type

NEMA Standard 11-3-1983.

Copyright National Electrical Manufacturers Association
Provided by IHS under license with NEMA
No reproduction or networking permitted without license from IHS

Not for Resale

Copyright National Electrical Manufacturers Association
Provided by IHS under license with NEMA
No reproduction or networking permitted without license from IHS
Not for Resale

Figure L17-30
LOCKING TYPE PLUG AND RECEPTACLE
600 volts, 30 amperes, 3 phase, 3 pole, 4 wire, grounding type
NEMA Standard 11-3-1983.

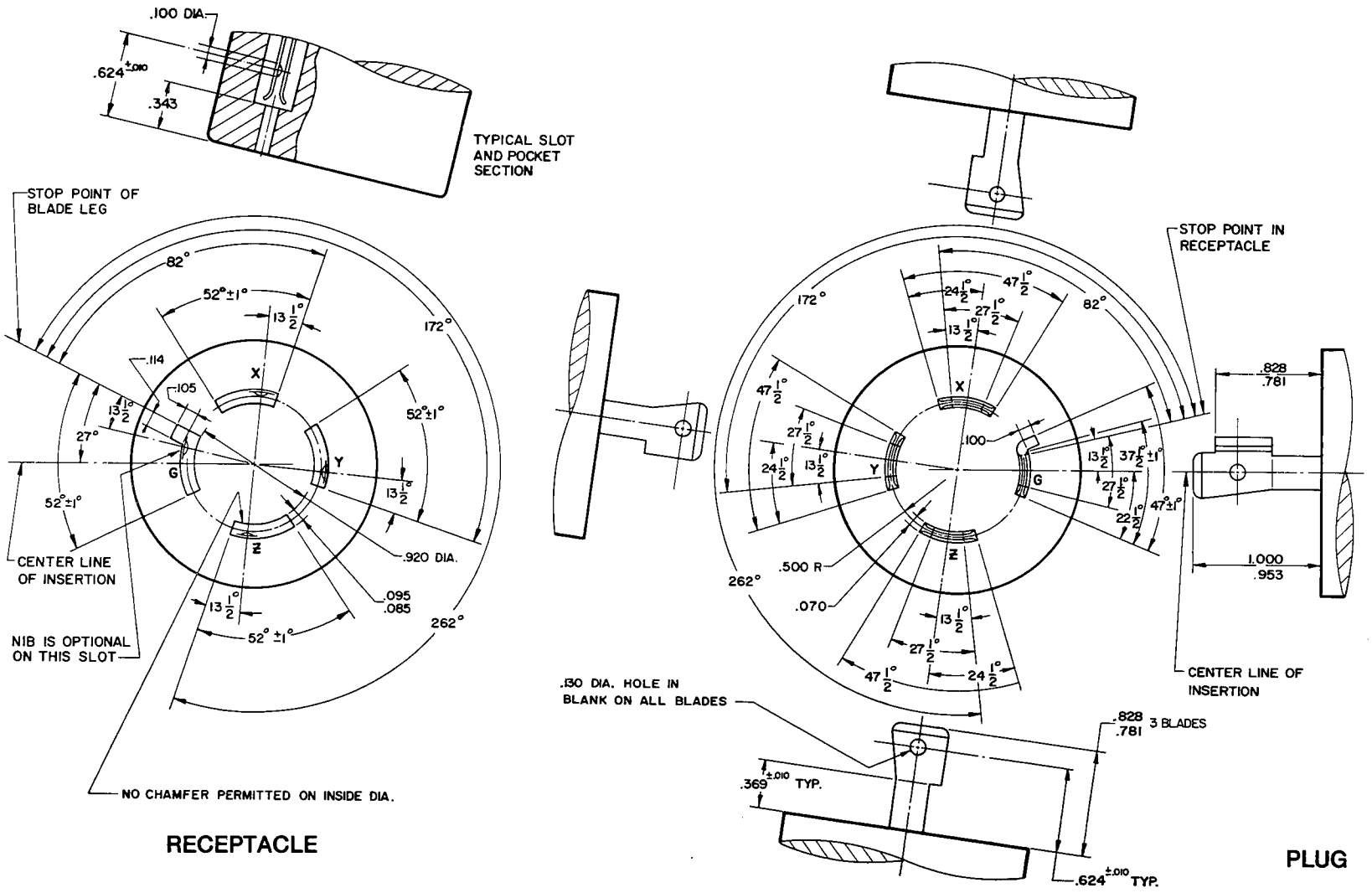

WD 6-88
6702247 0007041 7

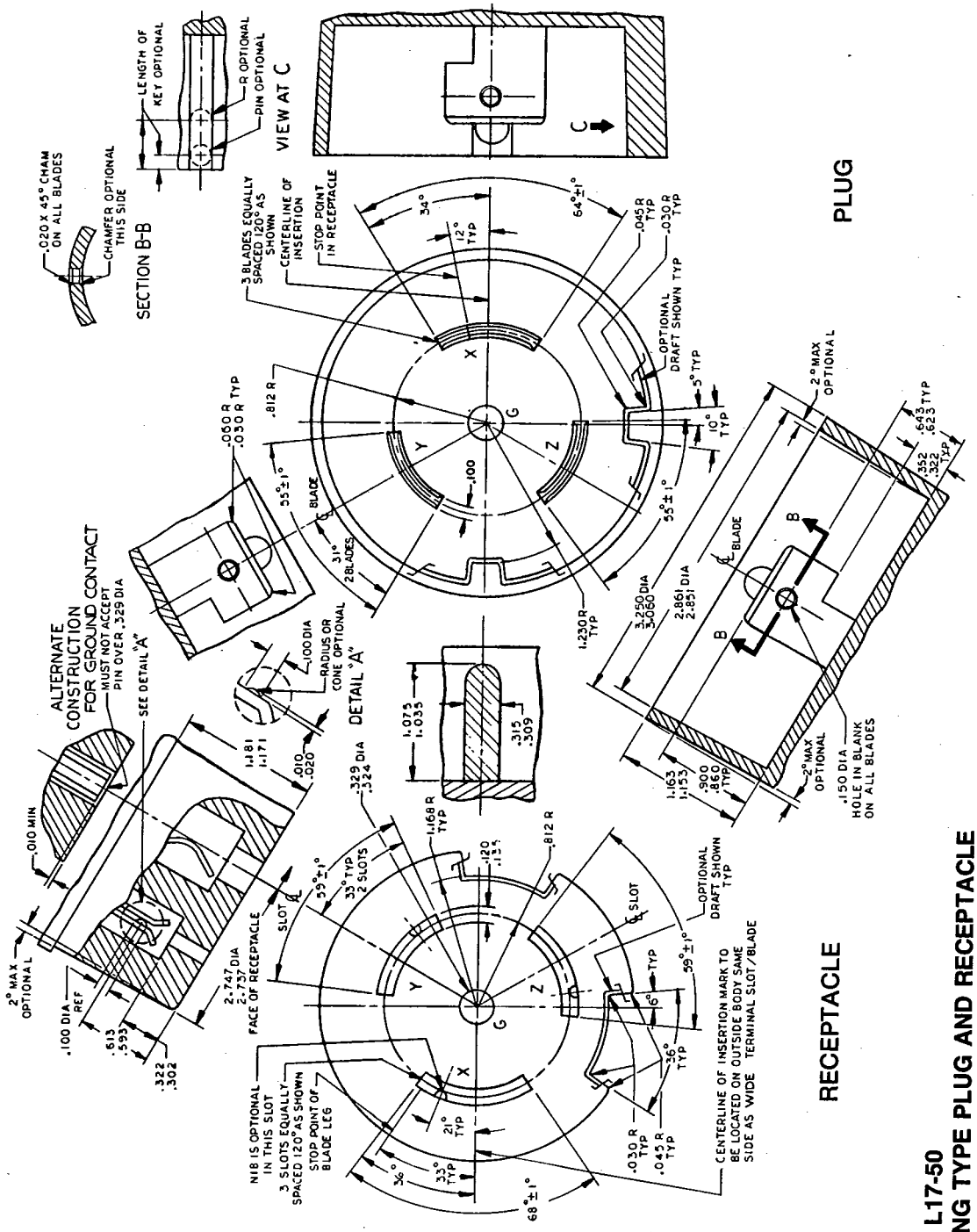

Figure L17-50
LOCKING TYPE PLUG AND RECEPTACLE
600 volts, 50 amperes, 3 phase, 3 pole, 4 wire, grounding type

NEMA Standard 11-3-1988.

Copyright National Electrical Manufacturers Association
Provided by IHS under license with NEMA
No reproduction or networking permitted without license from IHS

Not for Resale

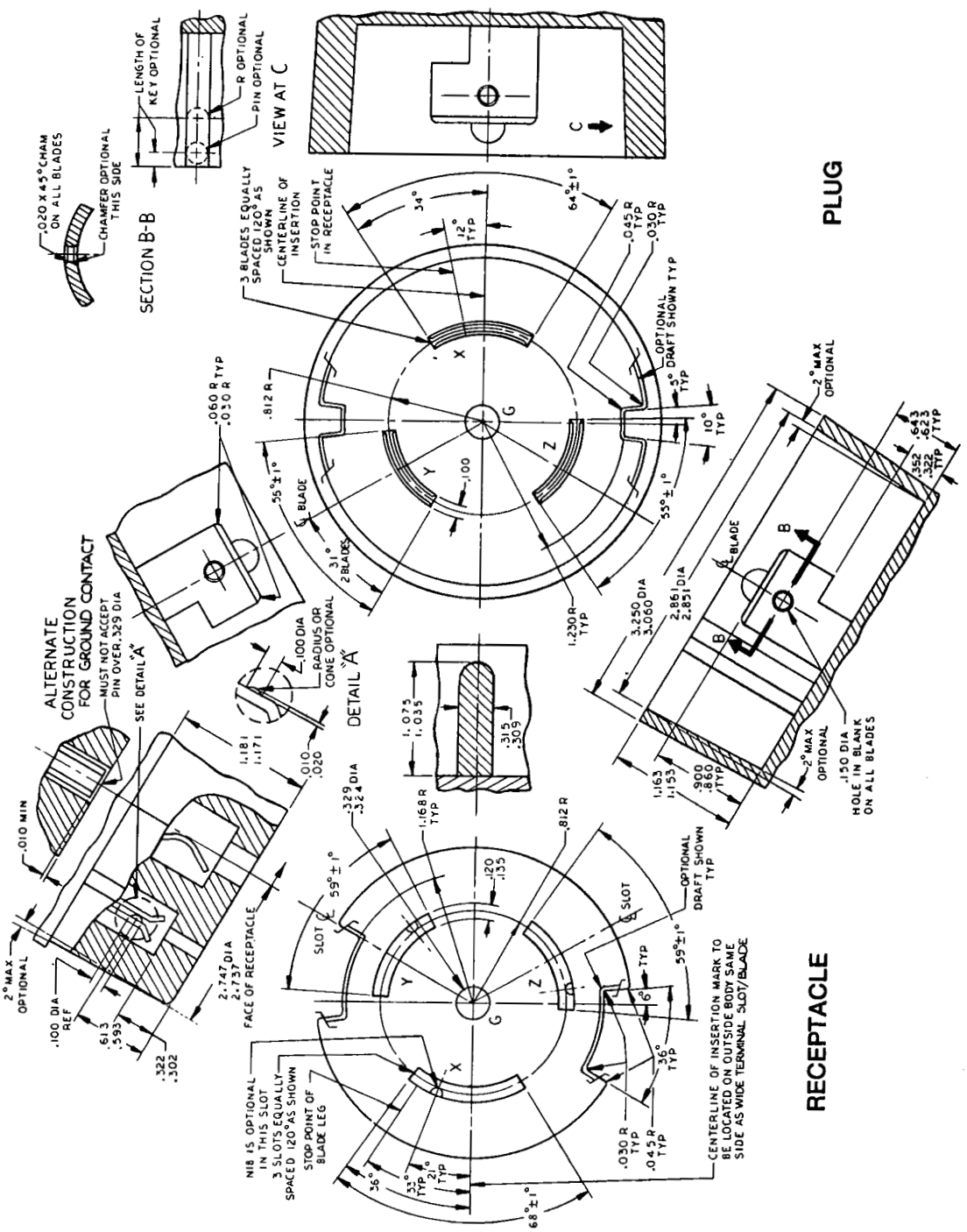

Figure L17-60
LOCKING TYPE PLUG AND RECEPTACLE
600 volts, 60 amperes, 3 phase, 3 pole, 4 wire, grounding type
NEMA Standard 11-3-1983.

Copyright National Electrical Manufacturers Association
Provided by IHS under license with NEMA
No reproduction or networking permitted without license from IHS

Not for Resale

Copyright National Electrical Manufacturers Association
Provided by IHS under license with NEMA
No reproduction or networking permitted without license from IHS
Not for Resale

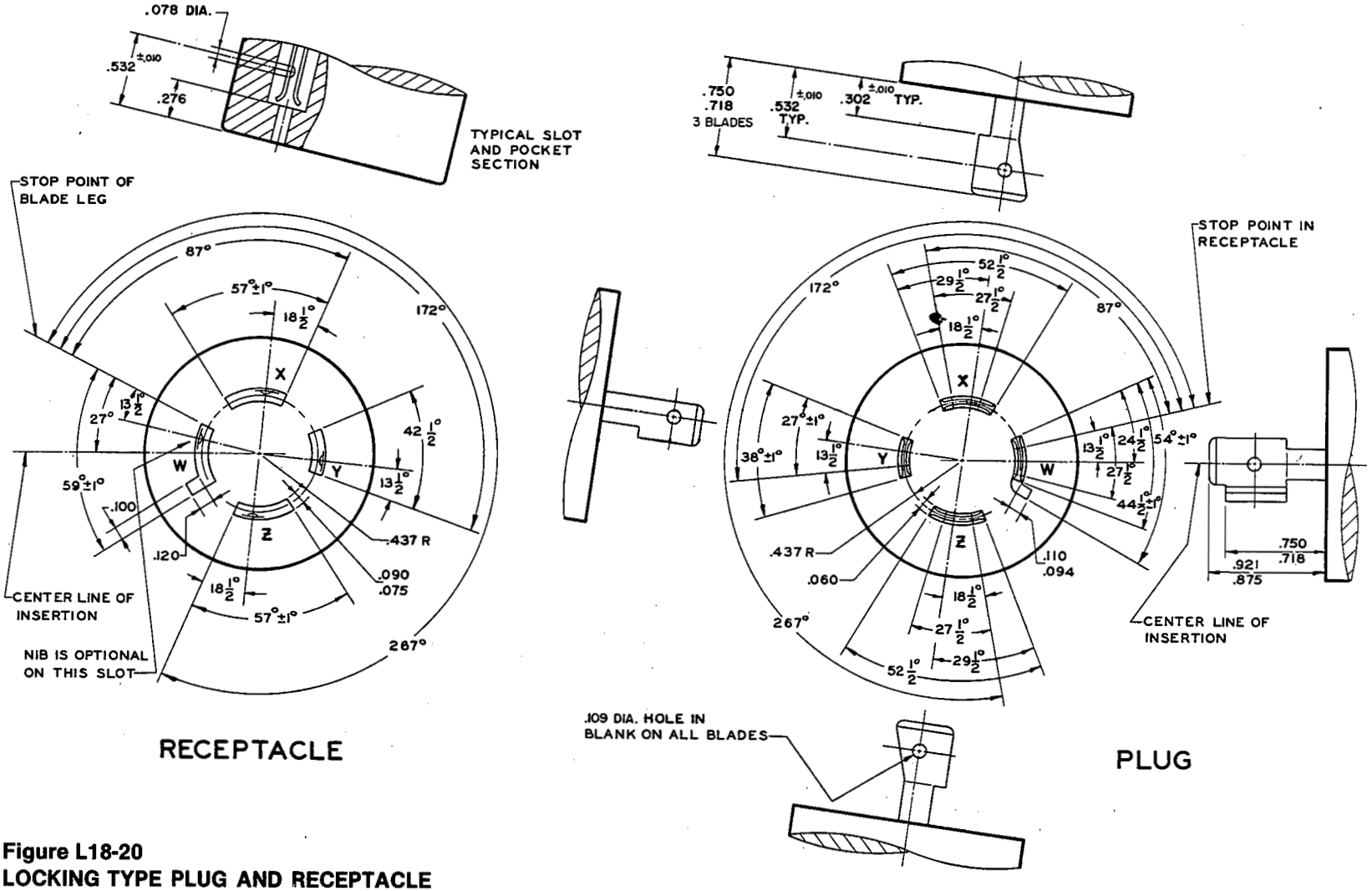

Figure L18-20
LOCKING TYPE PLUG AND RECEPTACLE
208/120 volts, 20 amperes, 3 phase Y, 4 pole, 4 wire
NEMA Standard 11-3-1983.

Copyright National Electrical Manufacturers Association
Provided by IHS under license with NEMA
No reproduction or networking permitted without license from IHS
Not for Resale

Figure L18-30
LOCKING TYPE PLUG AND RECEPTACLE
208/120 volts, 30 amperes, 3 phase Y, 4 pole, 4 wire
NEMA Standard 11-3-1983.

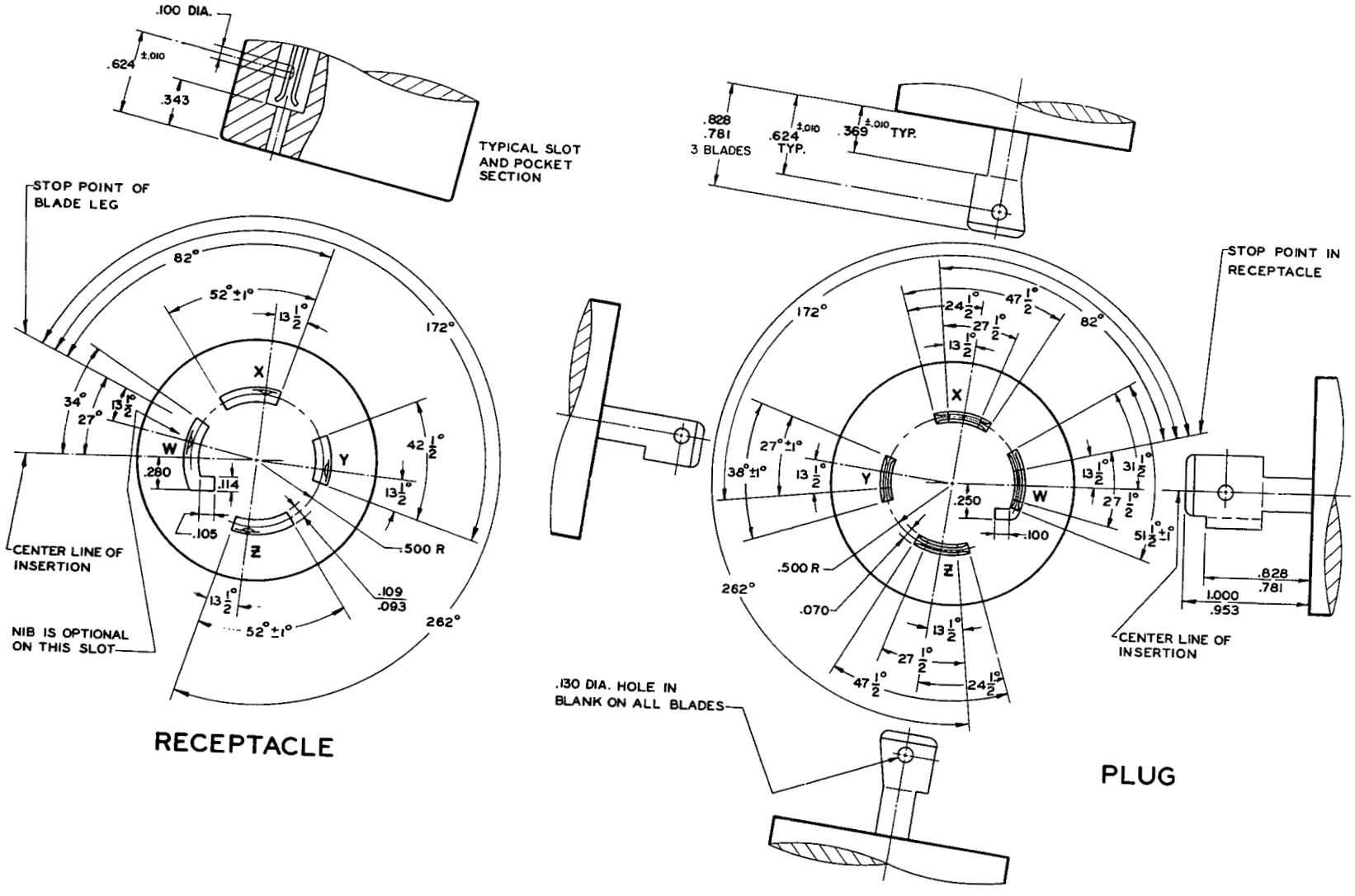

WD 6-88
6470247 0007021 0

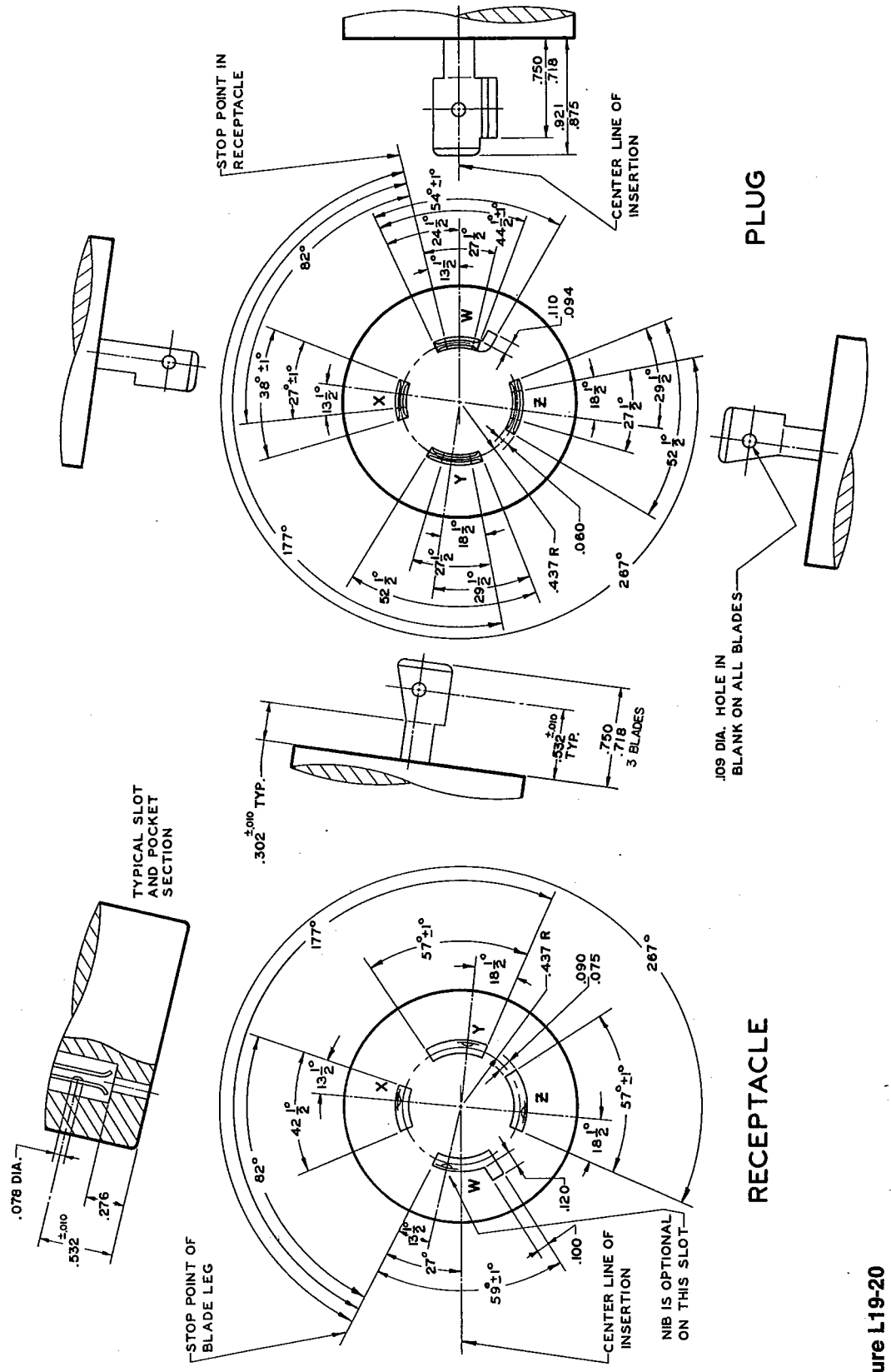

Figure L19-20
LOCKING TYPE PLUG AND RECEPTACLE
408/277 volts, 20 amperes, 3 phase Y, 4 pole, 4 wire
NEMA Standard 11-3-1983.

Copyright National Electrical Manufacturers Association
Provided by IHS under license with NEMA
No reproduction or networking permitted without license from IHS

Not for Resale

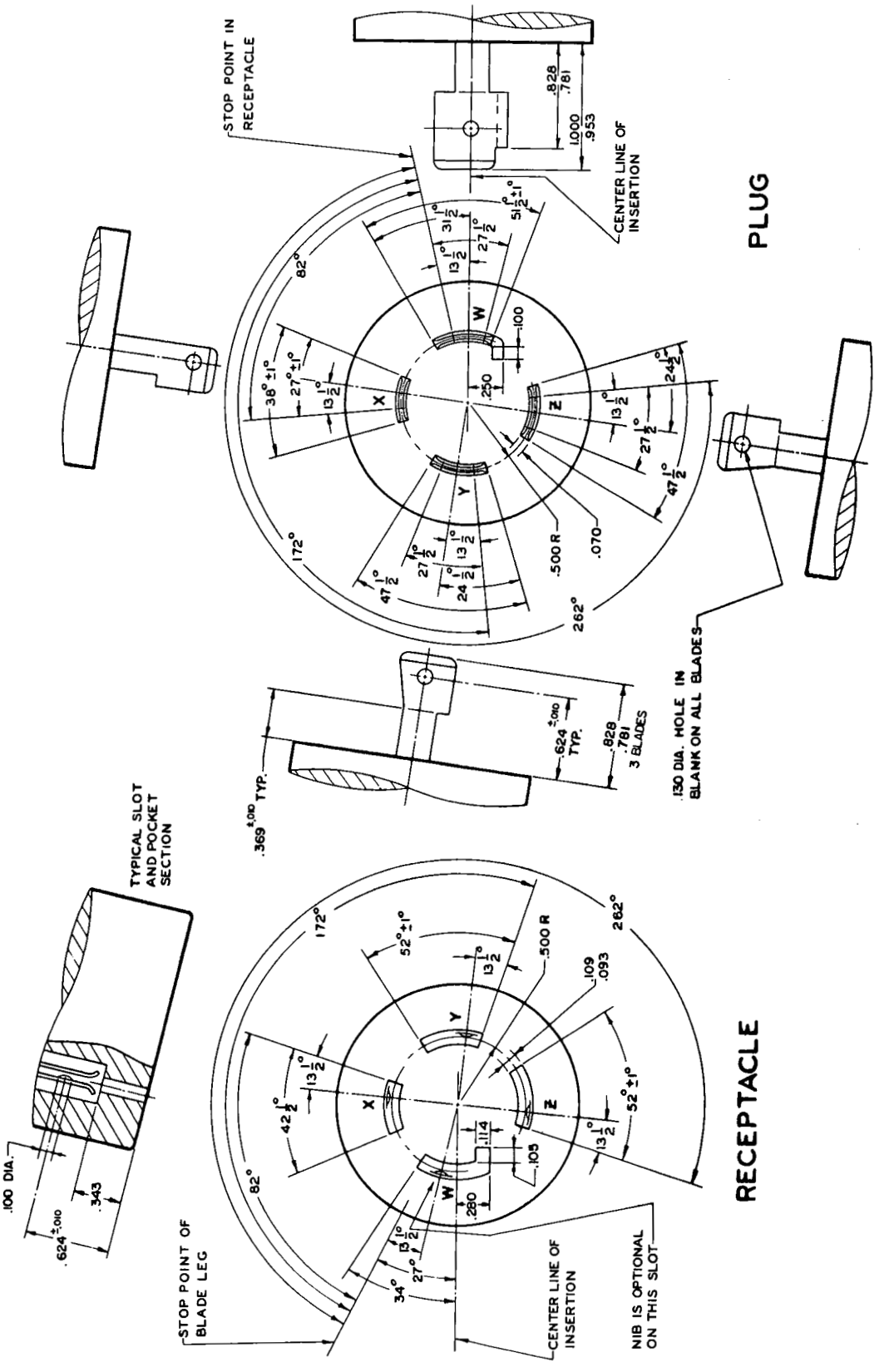

Figure L19-30
LOCKING TYPE PLUG AND RECEPTACLE
480/277 volts, 30 amperes, 3 phase Y, 4 pole, 4 wire
NEMA Standard 11-3-1983.

Copyright National Electrical Manufacturers Association
Provided by IHS under license with NEMA
No reproduction or networking permitted without license from IHS
Not for Resale

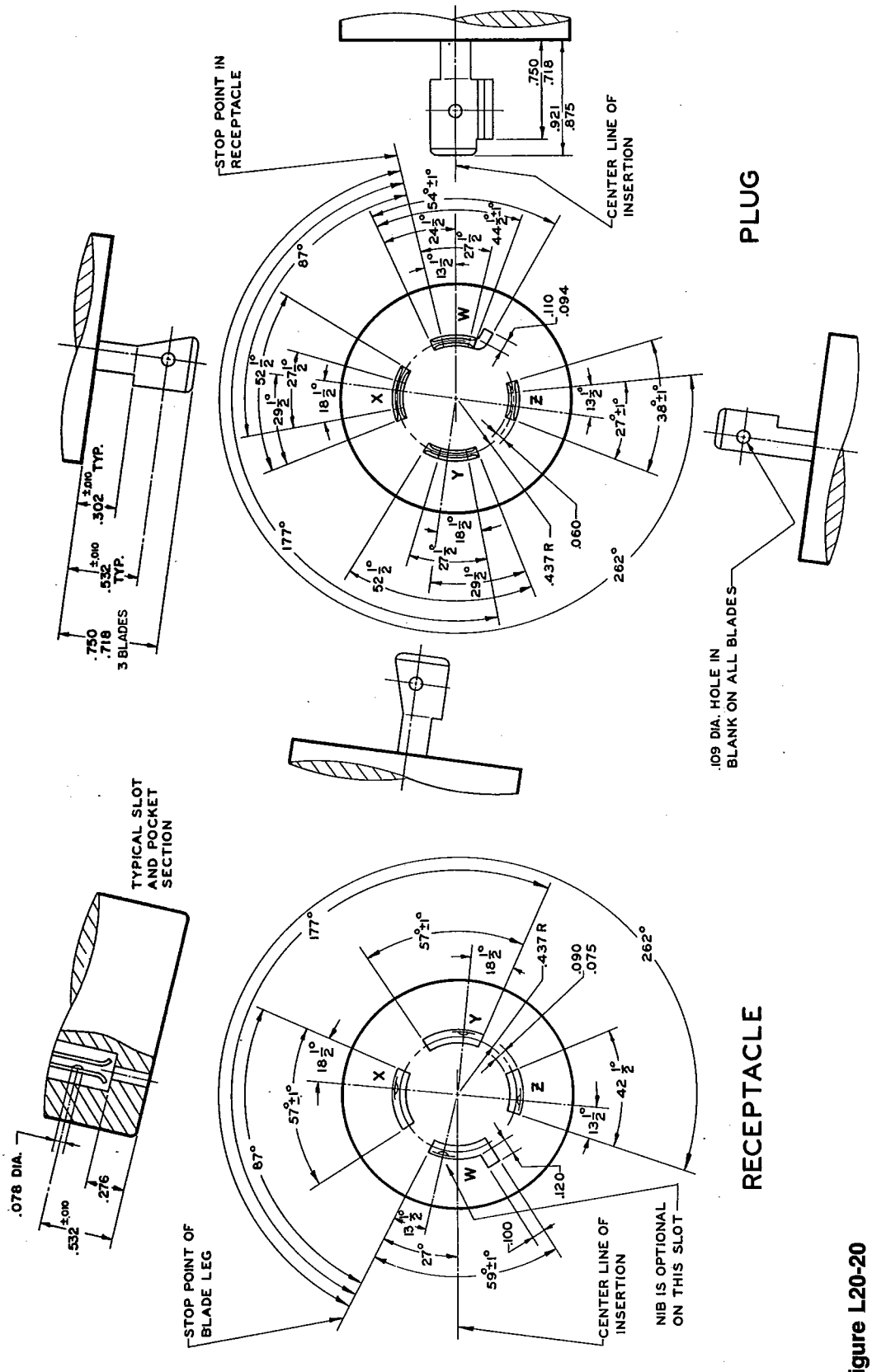

Figure L20-20
LOCKING TYPE PLUG AND RECEPTACLE
600/347 volts, 20 amperes, 3 phase Y, 4 pole, 4 wire
NEMA Standard 11-3-1983.

Copyright National Electrical Manufacturers Association
Provided by IHS under license with NEMA
No reproduction or networking permitted without license from IHS

Not for Resale

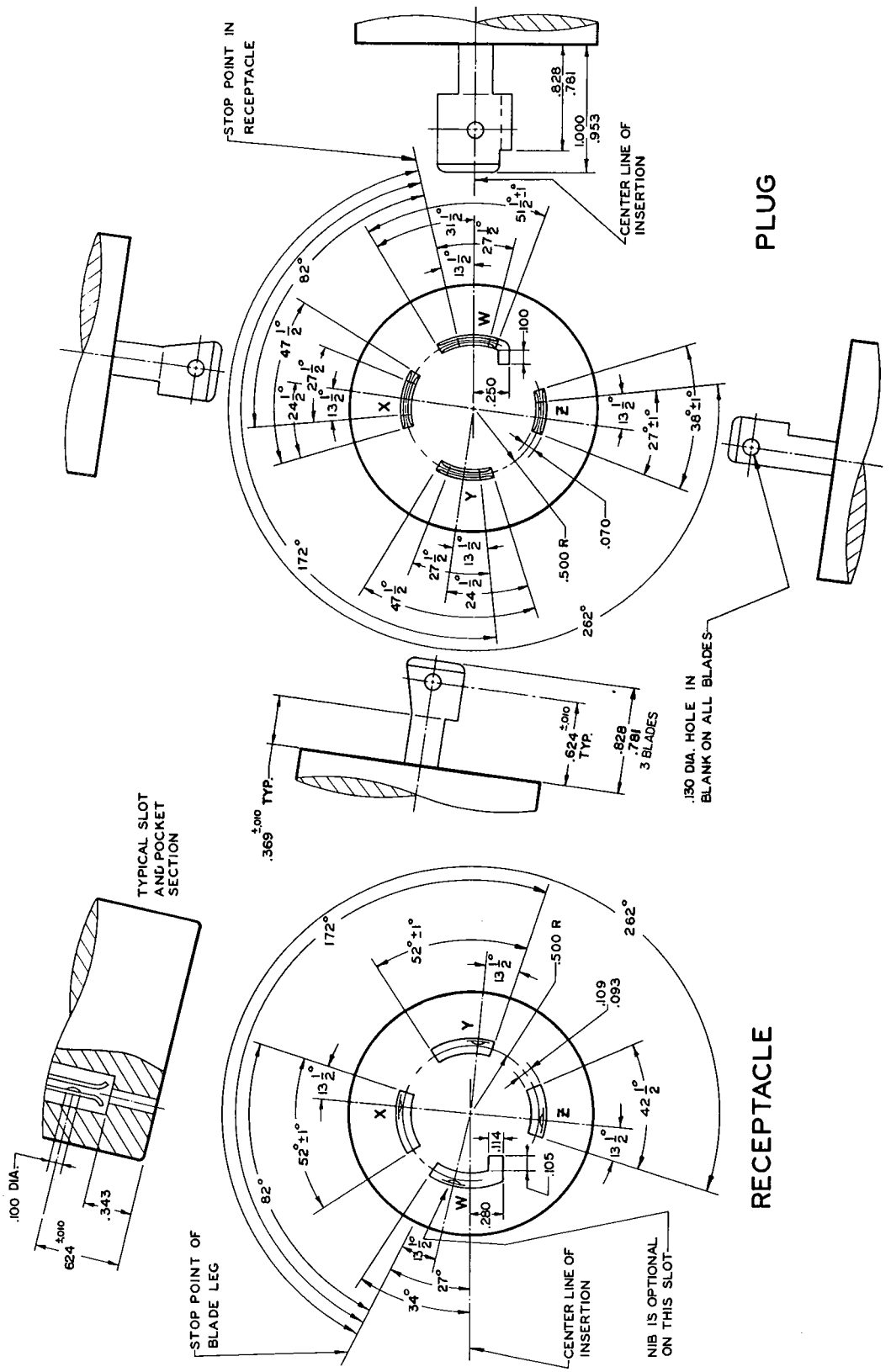

Figure L20-30
LOCKING TYPE PLUG AND RECEPTACLE
600/347 volts, 30 amperes, 3 phase Y, 4 pole, 4 wire
NEMA Standard 11-3-1983.

Copyright National Electrical Manufacturers Association
Provided by IHS under license with NEMA
No reproduction or networking permitted without license from IHS

Not for Resale

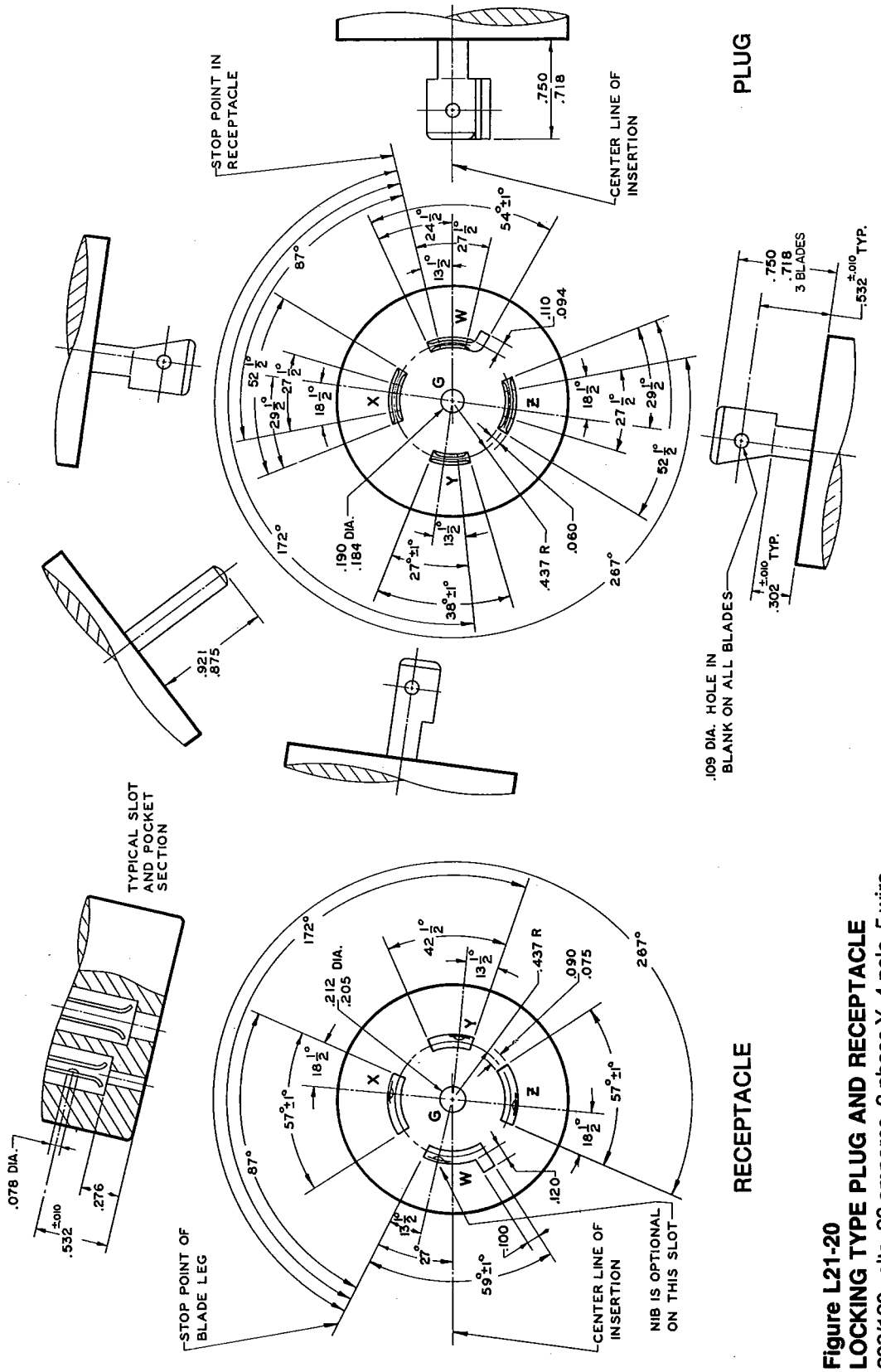

Figure L21-20
LOCKING TYPE PLUG AND RECEPTACLE
208/120 volts, 20 amperes, 3 phase Y, 4 pole, 5 wire, grounding type

NEMA Standard 11-3-1983.

Copyright National Electrical Manufacturers Association
Provided by IHS under license with NEMA
No reproduction or networking permitted without license from IHS

Not for Resale

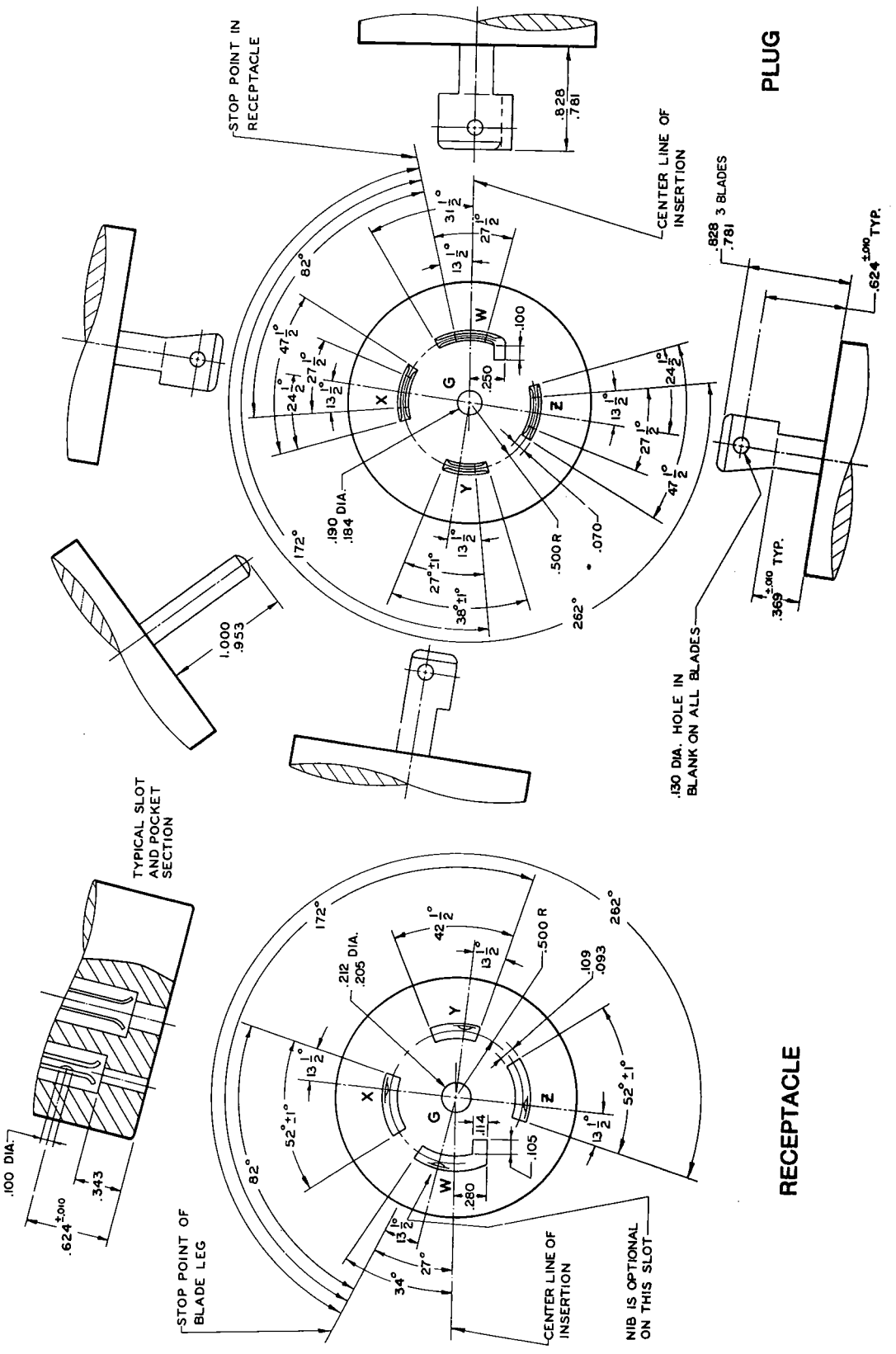

Figure L21-30
LOCKING TYPE PLUG AND RECEPTACLE
208/120 volts, 30 amperes, 3 phase, 4 pole, 5 wire, grounding type

NEMA Standard 11-3-1983.

Copyright National Electrical Manufacturers Association
Provided by IHS under license with NEMA
No reproduction or networking permitted without license from IHS

Not for Resale

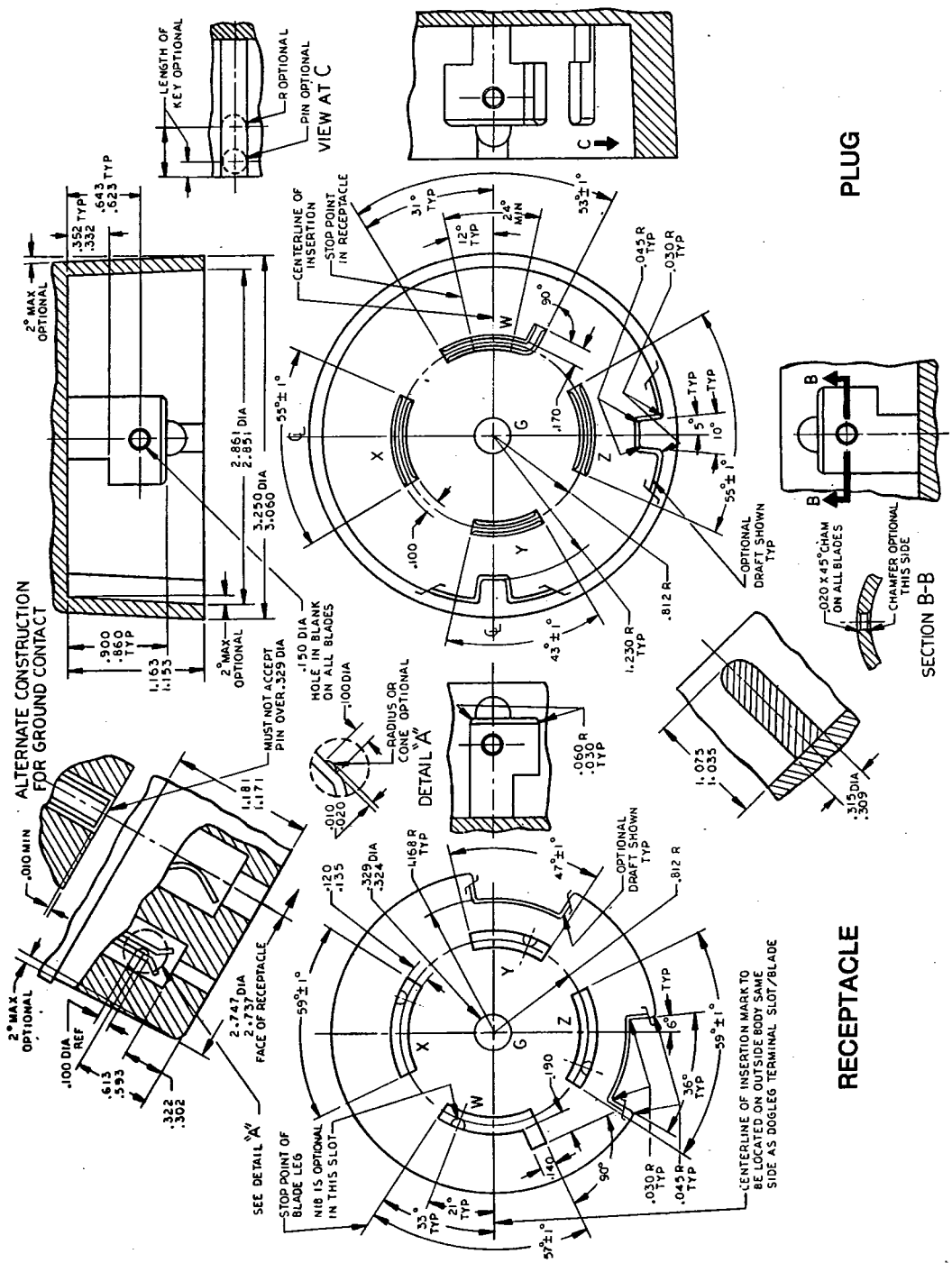

Figure L21-50
LOCKING TYPE PLUG AND RECEPTACLE
208/120 volts, 50 amperes, 3 phase Y, 4 pole, 5 wire, grounding type

NEMA Standard 11-3-1983.

Copyright National Electrical Manufacturers Association
Provided by IHS under license with NEMA
No reproduction or networking permitted without license from IHS

Not for Resale

Figure L21-60
LOCKING TYPE PLUG AND RECEPTACLE
208/120 volts, 60 amperes, 3 phase Y, 4 pole, 5 wire, grounding type

NEMA Standard 11-3-1983.

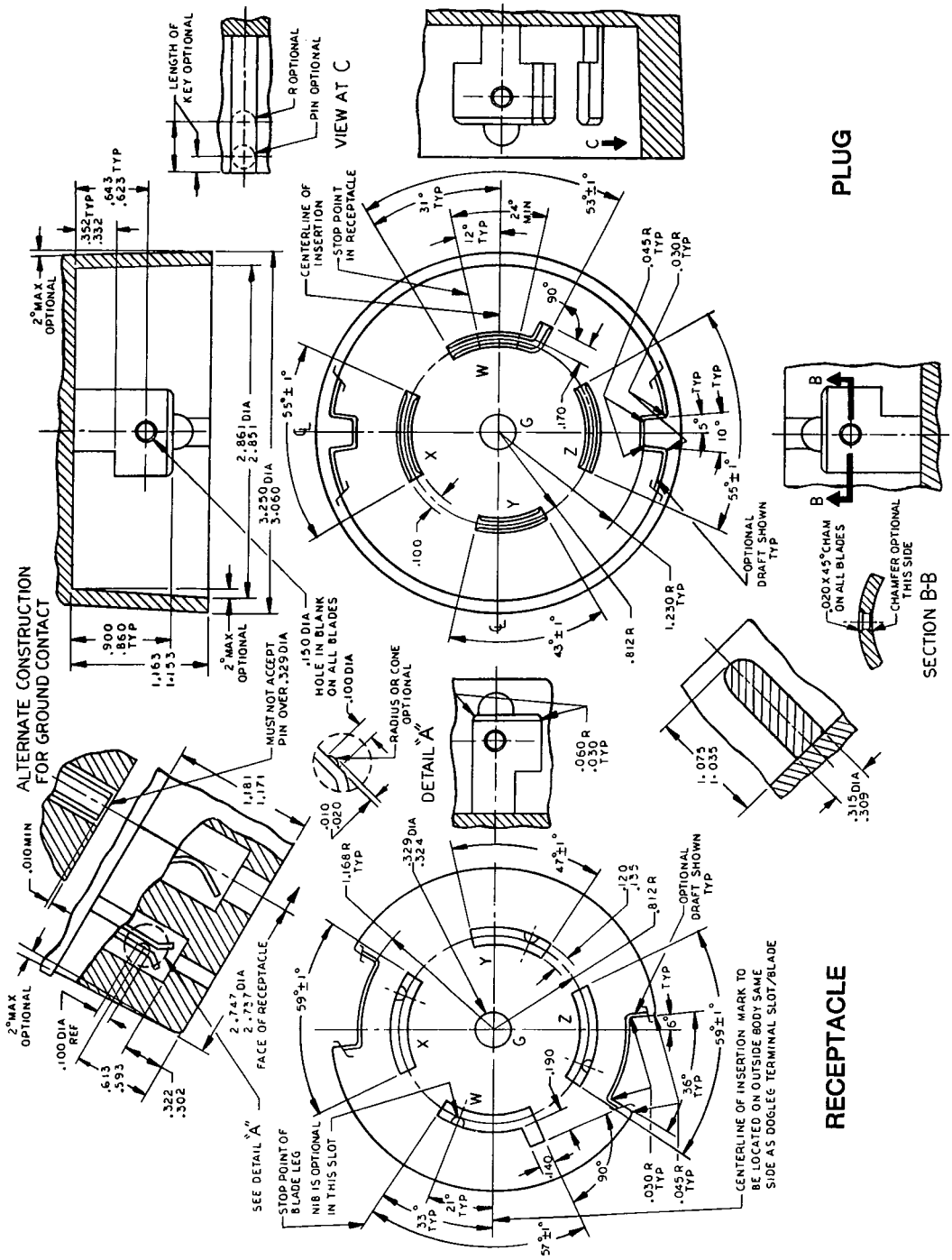

Copyright National Electrical Manufacturers Association
Provided by IHS under license with NEMA
No reproduction or networking permitted without license from IHS

Not for Resale

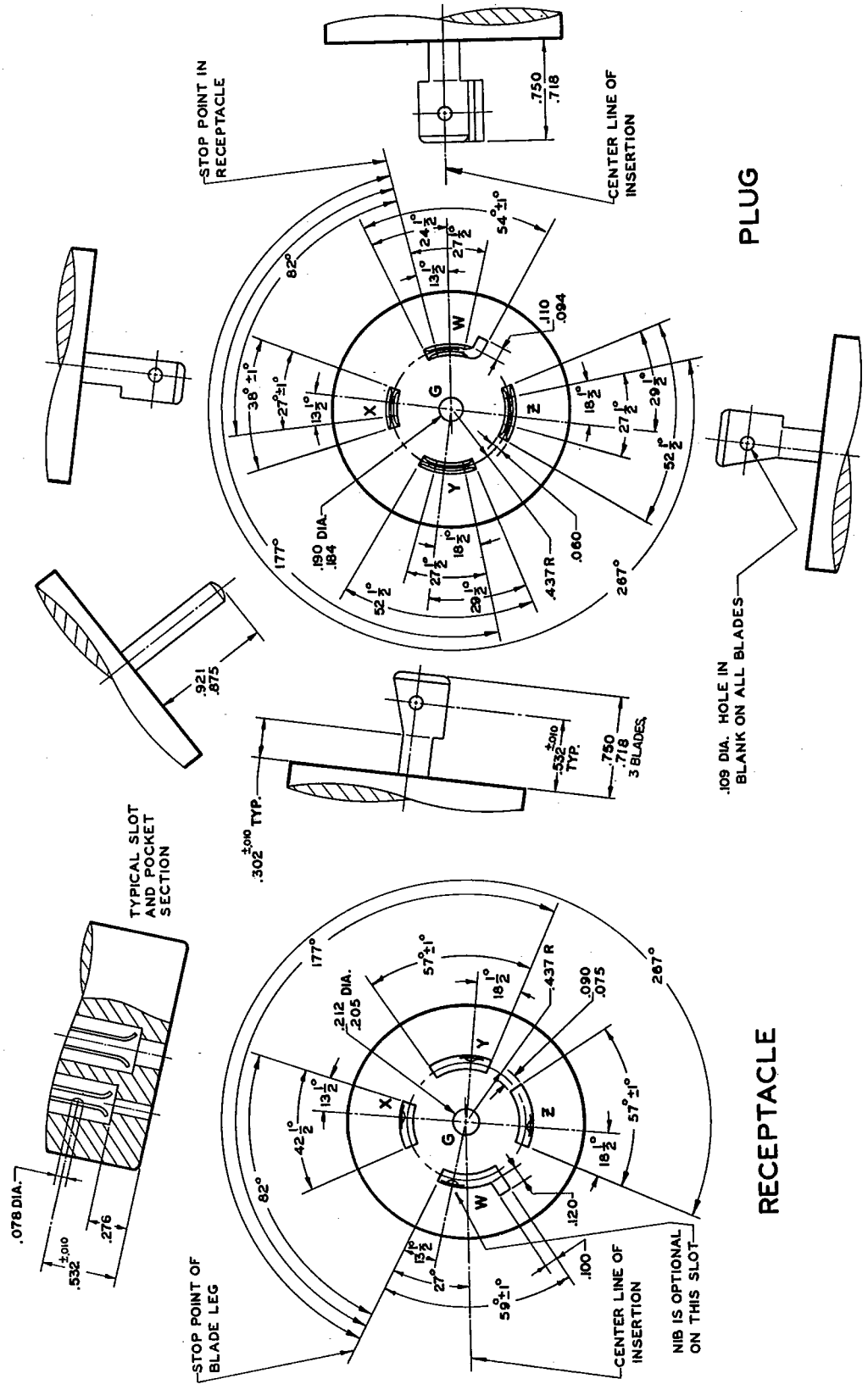

Figure L22-20
LOCKING TYPE PLUG AND RECEPTACLE
480/277 volts, 20 amperes, 3 phase Y, 4 pole, 5 wire, grounding type
NEMA Standard 11-3-1983.

Copyright National Electrical Manufacturers Association
Provided by IHS under license with NEMA
No reproduction or networking permitted without license from IHS

Not for Resale

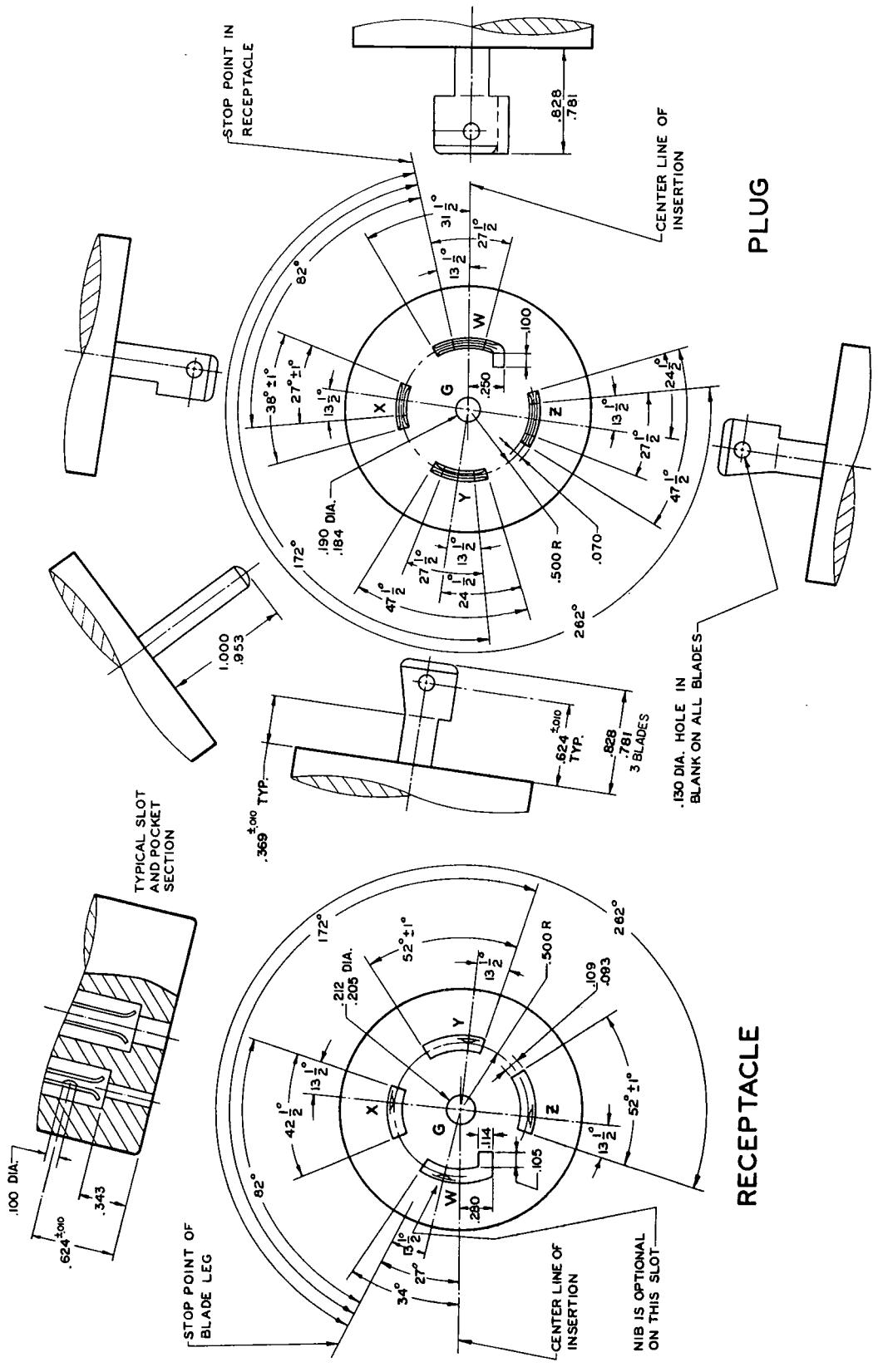

Figure L22-30
LOCKING TYPE PLUG AND RECEPTACLE
480/277 volts, 30 amperes, 3 phase Y, 4 pole, 5 wire, grounding type
NEMA Standard 11-3-1983.

Copyright National Electrical Manufacturers Association
Provided by IHS under license with NEMA
No reproduction or networking permitted without license from IHS

Not for Resale

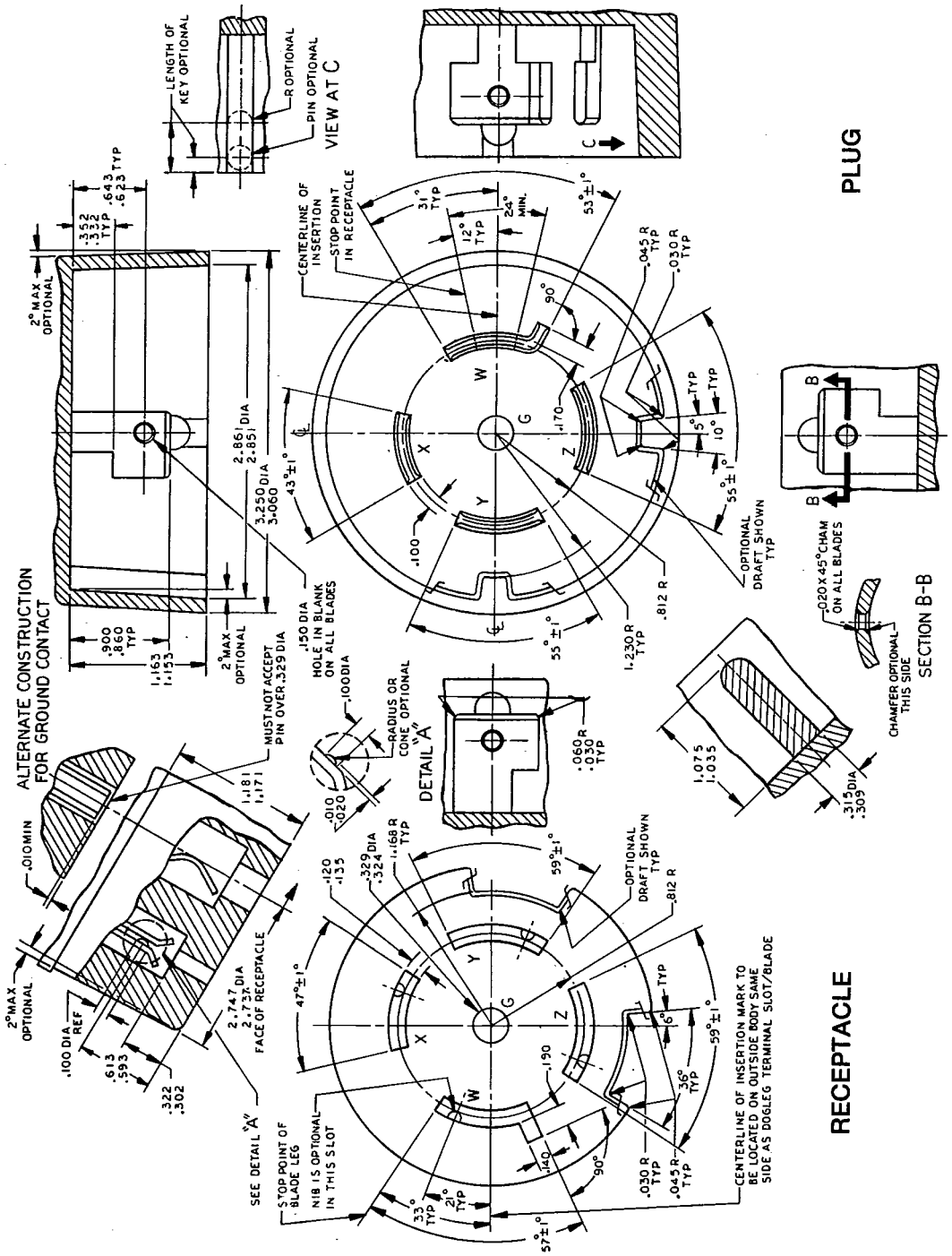

Figure L22-50
LOCKING TYPE PLUG AND RECEPTACLE
480/277 volts, 50 amperes, 3 phase Y, 4 pole, 5 wire, grounding type

NEMA Standard 11-3-1983.

Copyright National Electrical Manufacturers Association
Provided by IHS under license with NEMA
No reproduction or networking permitted without license from IHS

Not for Resale

Figure L22-60
LOCKING TYPE PLUG AND RECEPTACLE
480/277 volts, 60 amperes, 3 phase Y, 4 pole, 5 wire, grounding type

NEMA Standard 11-3-1983.

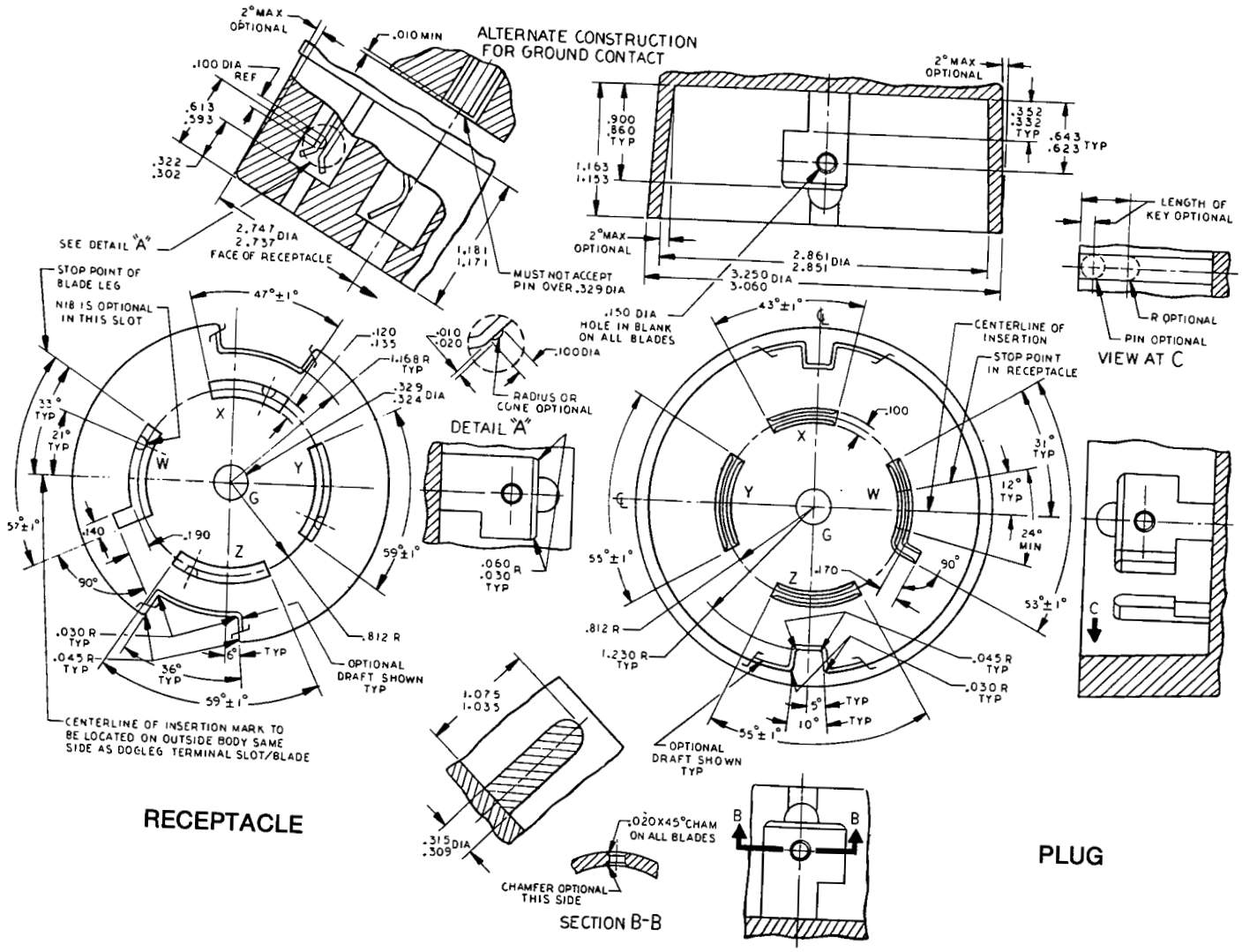

Copyright National Electrical Manufacturers Association
Provided by IHS under license with NEMA
No reproduction or networking permitted without license from IHS
Not for Resale

WD 6-88
6470247 0007033 7

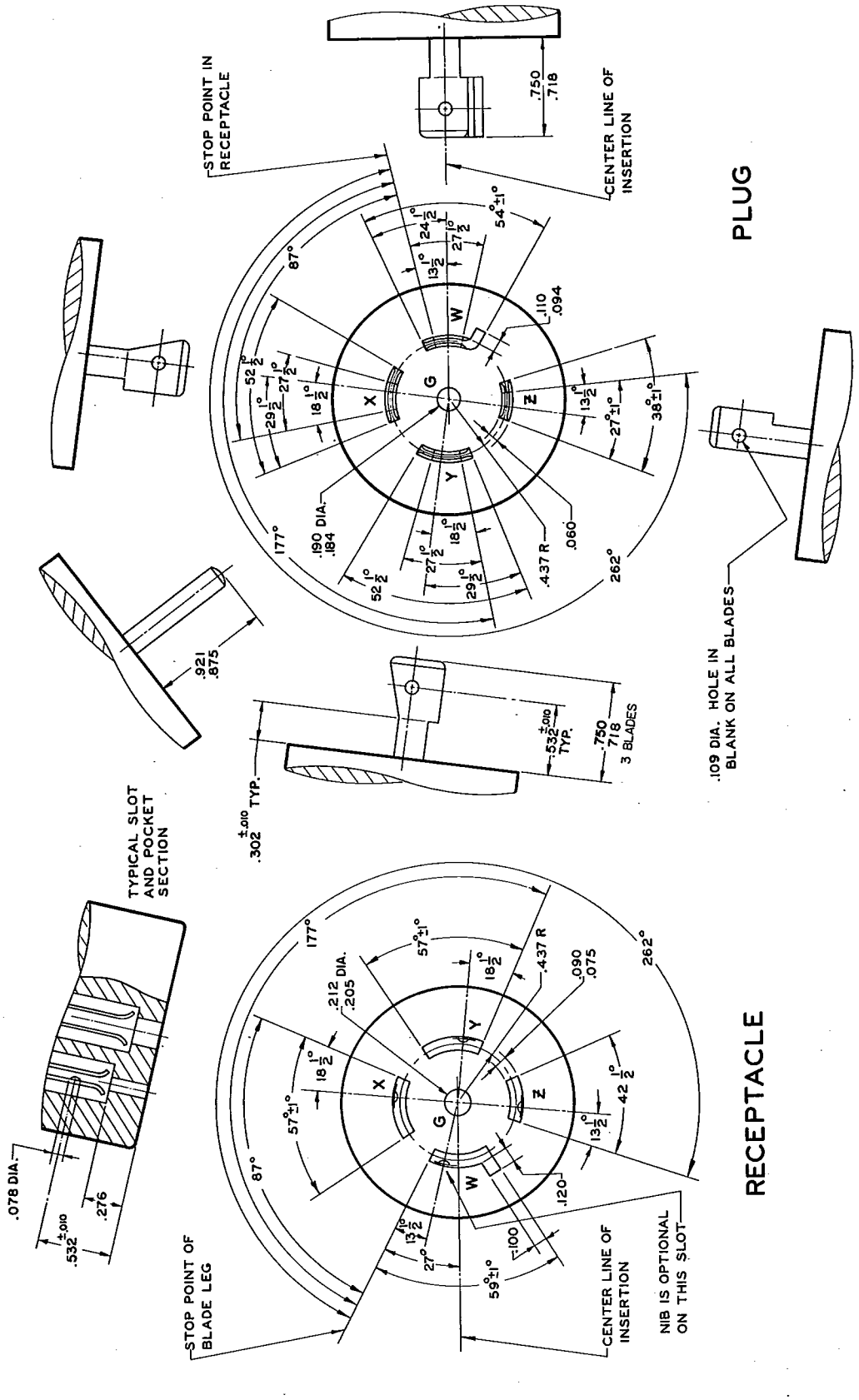

Figure L23-20
LOCKING TYPE PLUG AND RECEPTACLE
600/347 volts, 20 amperes, 3 phase Y, 4 pole, 5 wire, grounding type
NEMA Standard 11-3-1983.

Copyright National Electrical Manufacturers Association
Provided by IHS under license with NEMA
No reproduction or networking permitted without license from IHS

Not for Resale

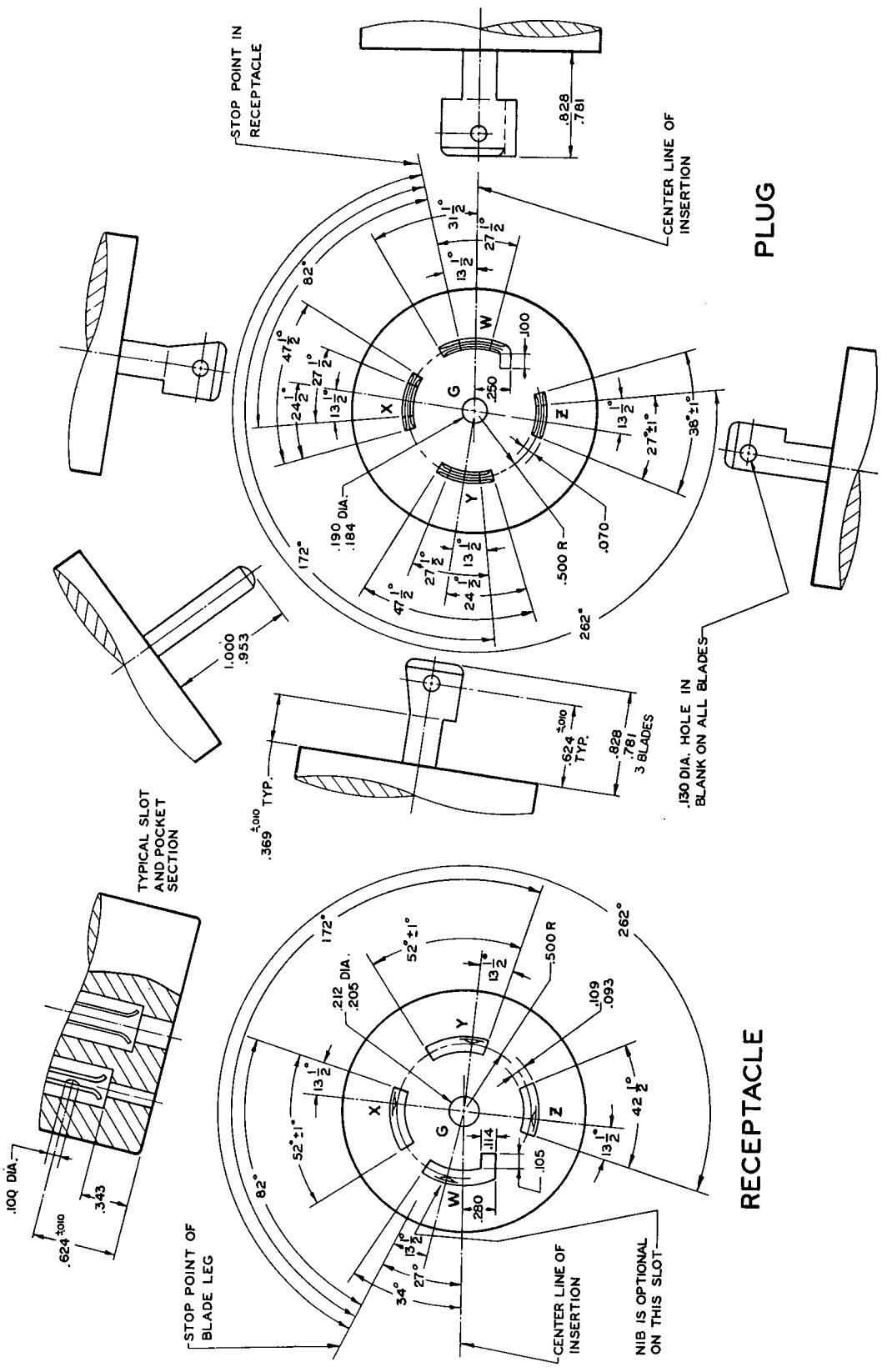

Figure L23-30
LOCKING TYPE PLUG AND RECEPTACLE
600/347 volts, 30 amperes, 3 phase Y, 4 pole, 5 wire, grounding type
NEMA Standard 11-3-1983.

Copyright National Electrical Manufacturers Association
Provided by IHS under license with NEMA
No reproduction or networking permitted without license from IHS
Not for Resale

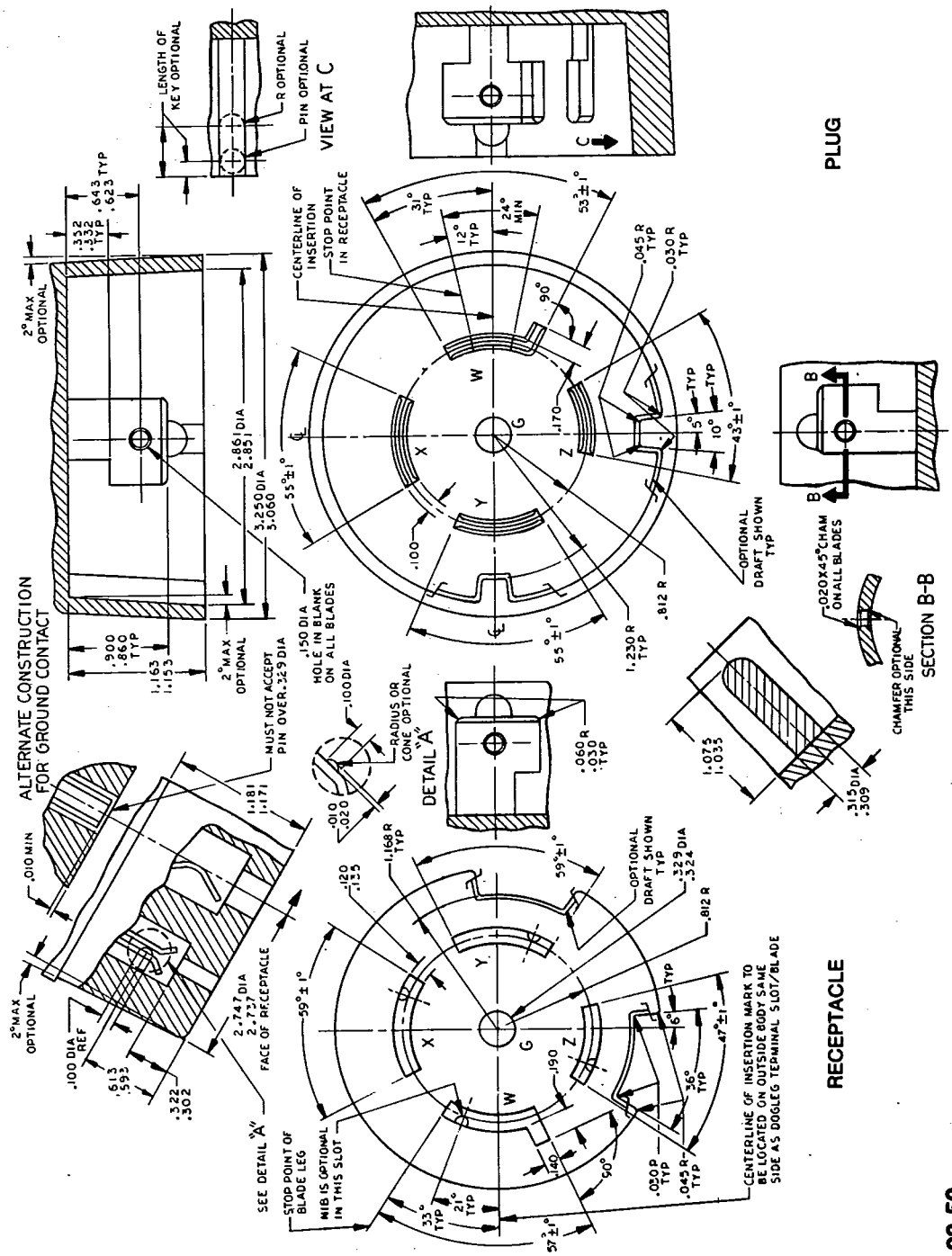

Figure L23-50
LOCKING TYPE PLUG AND RECEPTACLE
600/347 volts, 50 amperes, 3 phase Y, 4 pole, 5 wire, grounding type

NEMA Standard 11-3-1983.

Copyright National Electrical Manufacturers Association
Provided by IHS under license with NEMA
No reproduction or networking permitted without license from IHS

Not for Resale

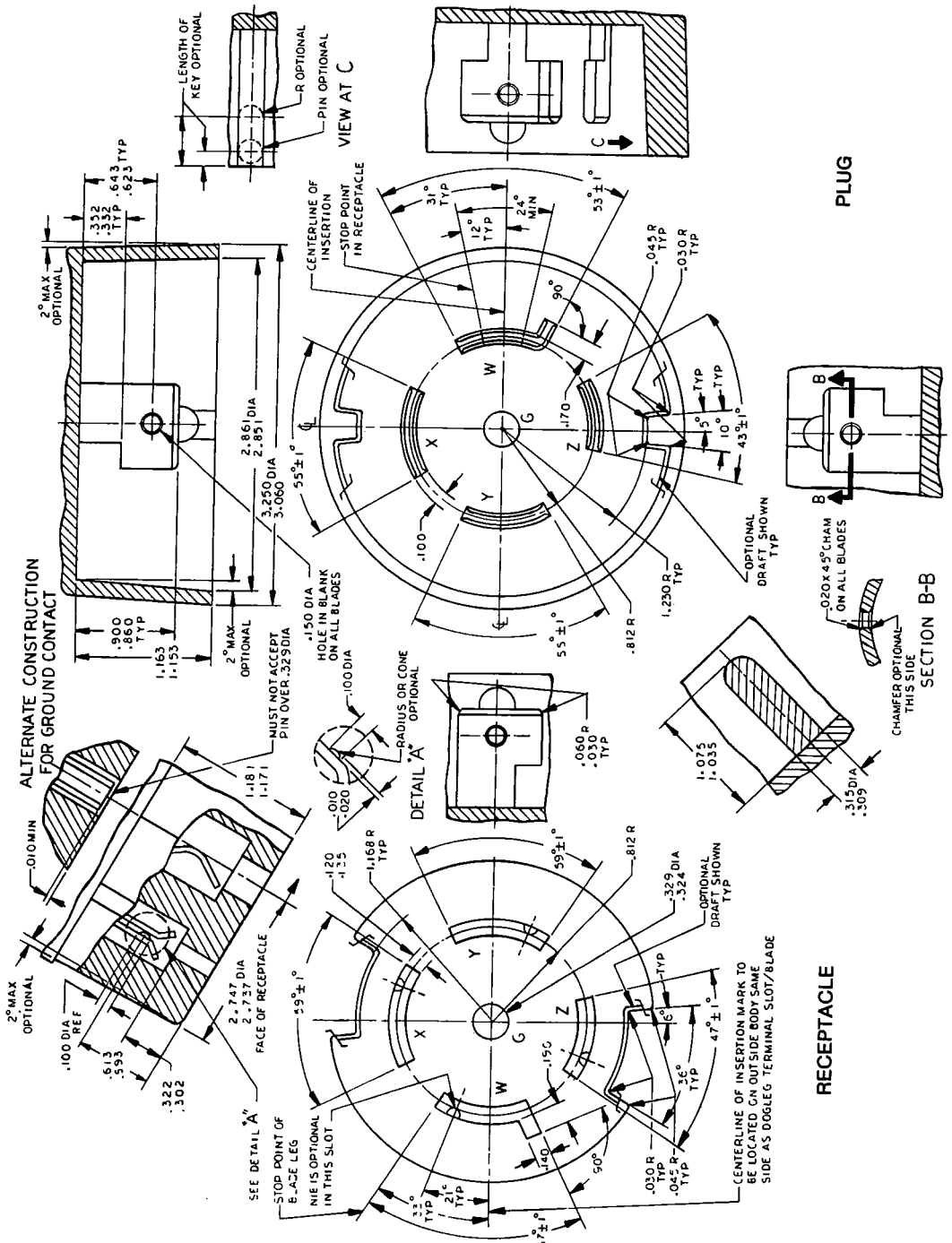

Figure L23-60
LOCKING TYPE PLUG AND RECEPTACLE
600/347 volts, 60 amperes, 3 phase Y, 4 pole, 5 wire, grounding type
NEMA Standard 11-3-1983.

Copyright National Electrical Manufacturers Association
Provided by IHS under license with NEMA
No reproduction or networking permitted without license from IHS

Not for Resale

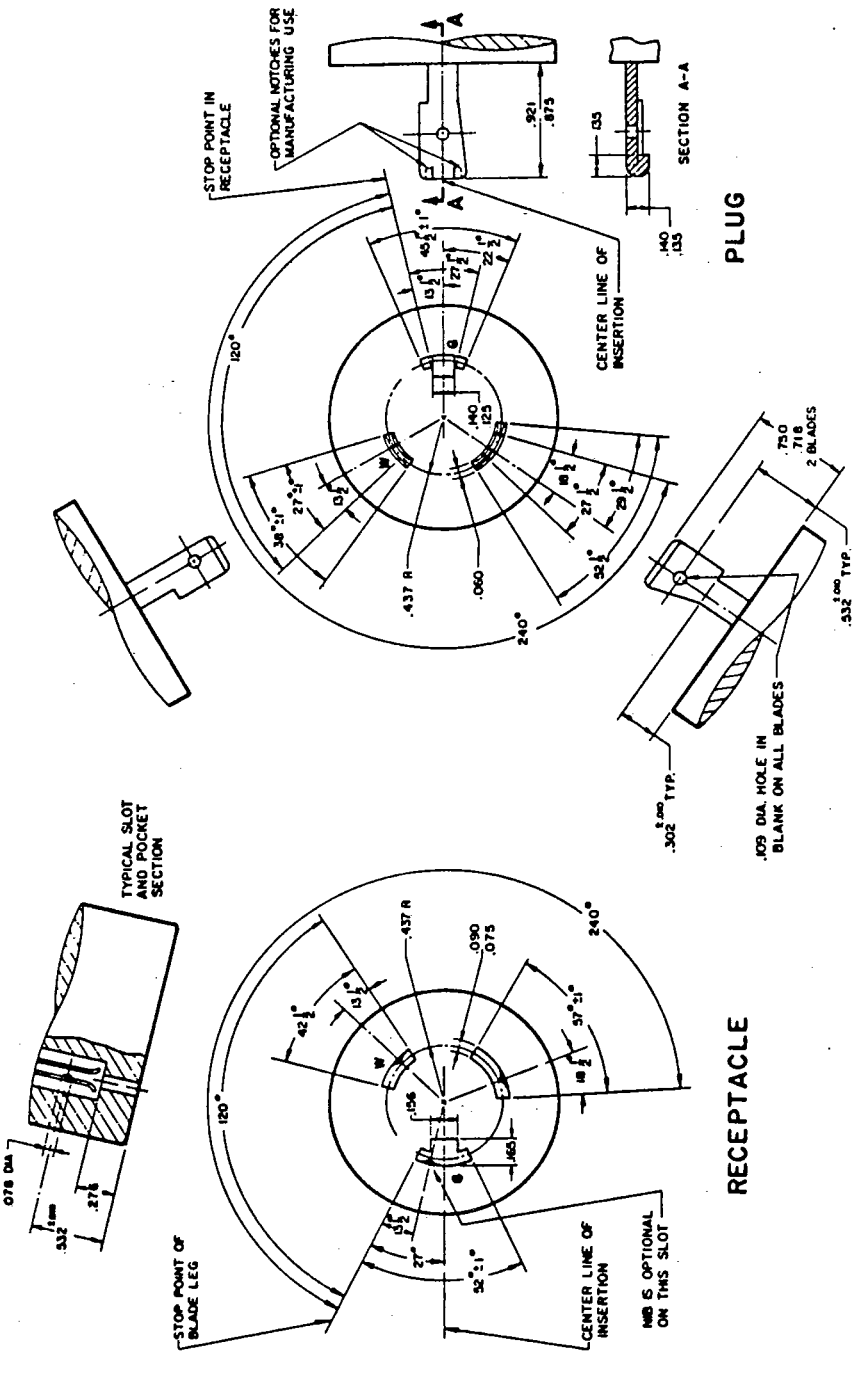

Figure L24-20
LOCKING TYPE PLUG AND RECEPTACLE
347 volts, 20 amperes, 2 pole, 3 wire, grounding type
NEMA Standard 11-3-1983.

Copyright National Electrical Manufacturers Association
Provided by IHS under license with NEMA
No reproduction or networking permitted without license from IHS

Not for Resale

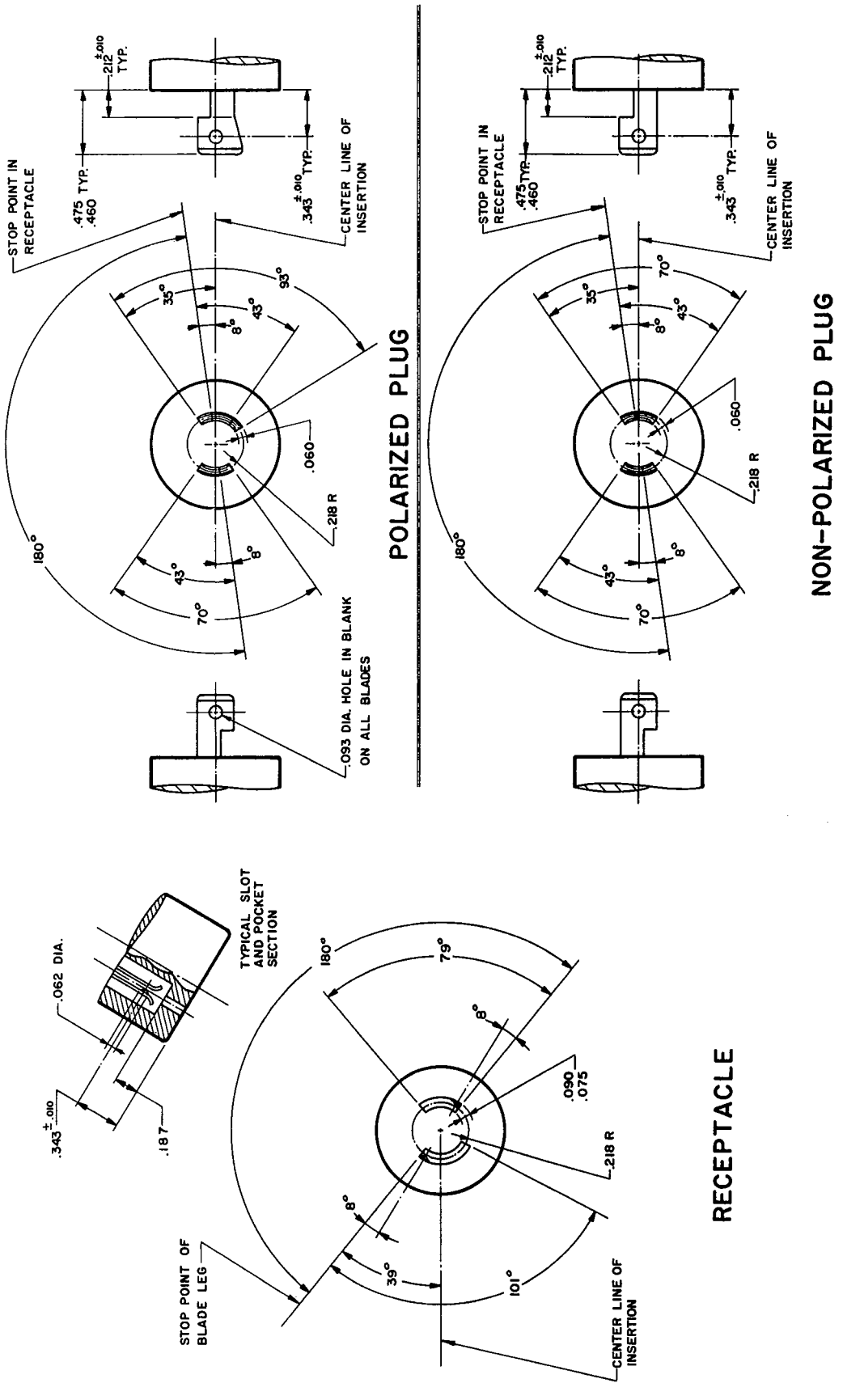

Figure ML-1
MIDGET LOCKING TYPE PLUG AND RECEPTACLE
125 volts, 15 amperes, 2 pole, 2 wire
NEMA Standard 11-3-1983.

Copyright National Electrical Manufacturers Association
Provided by IHS under license with NEMA
No reproduction or networking permitted without license from IHS

Not for Resale

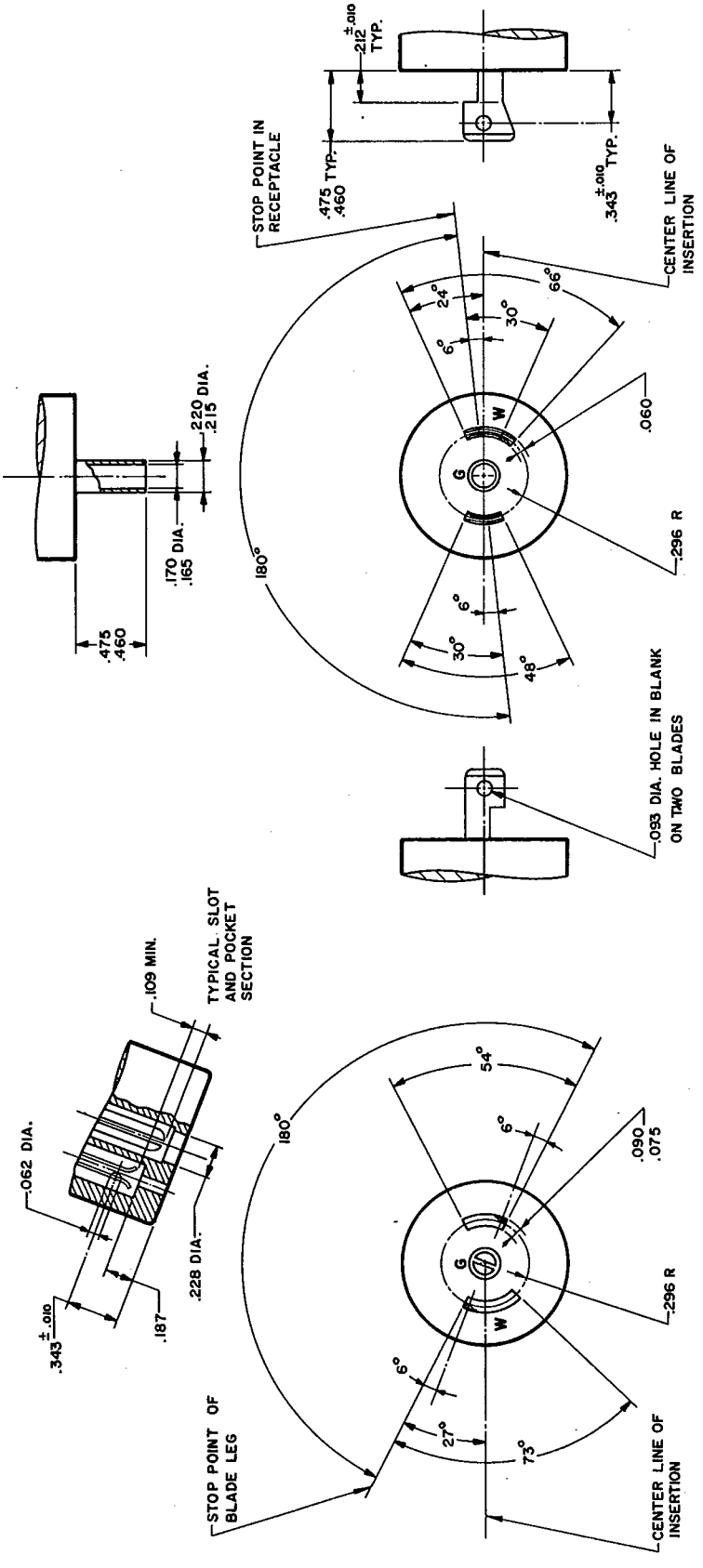

Figure ML-2
MIDGET LOCKING TYPE PLUG AND RECEPTACLE
125 volts, 15 amperes, 2 pole, 3 wire, grounding type
NEMA Standard 11-3-1983.

Copyright National Electrical Manufacturers Association
Provided by IHS under license with NEMA
No reproduction or networking permitted without license from IHS

Not for Resale

Copyright National Electrical Manufacturers Association
Provided by IHS under license with NEMA
No reproduction or networking permitted without license from IHS
Not for Resale

Figure ML-3
MIDGET LOCKING TYPE PLUG AND RECEPTACLE
125/250 volts, 15 amperes, 3 pole, 3 wire
NEMA Standard 11-3-1983.

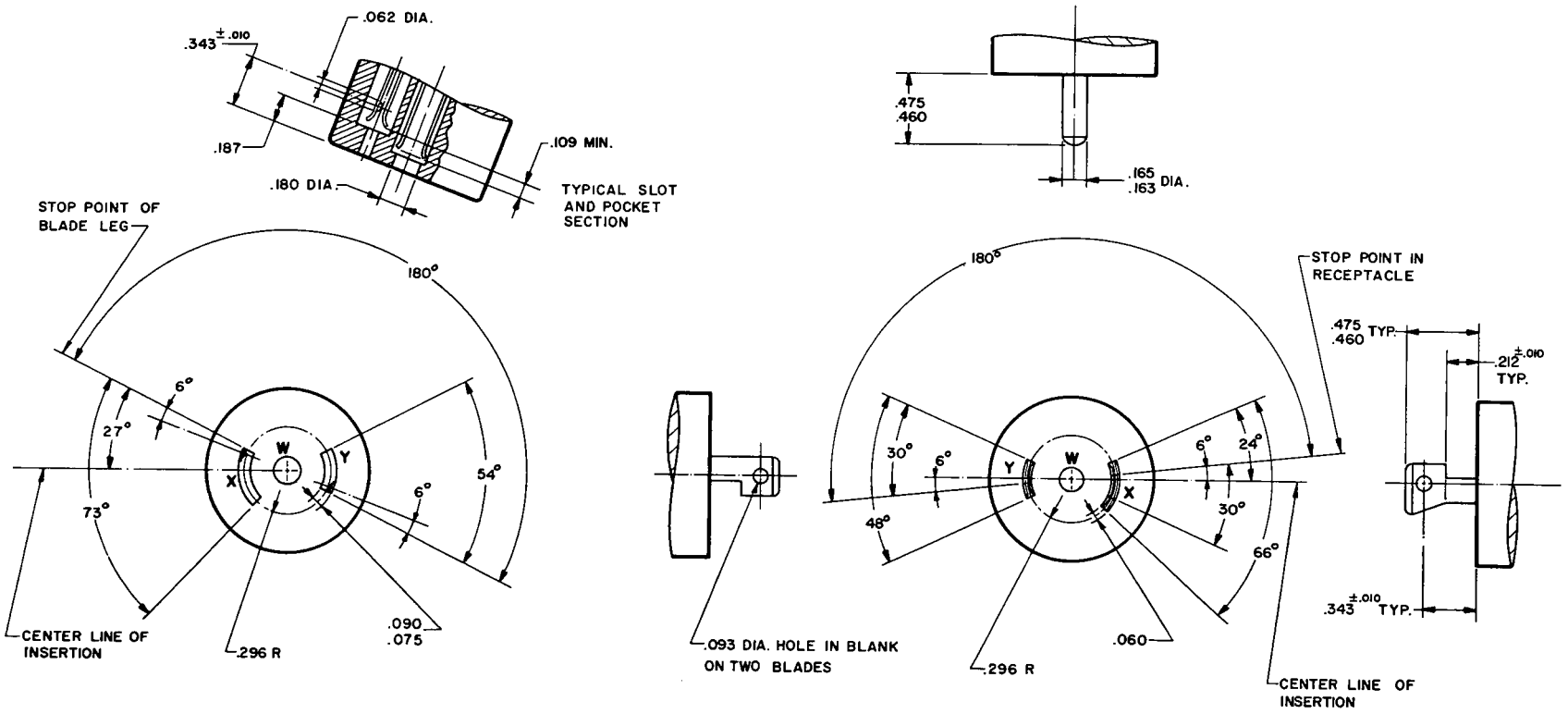

RECEPTACLE

PLUG

WD 6-88
6470247 0007041 6

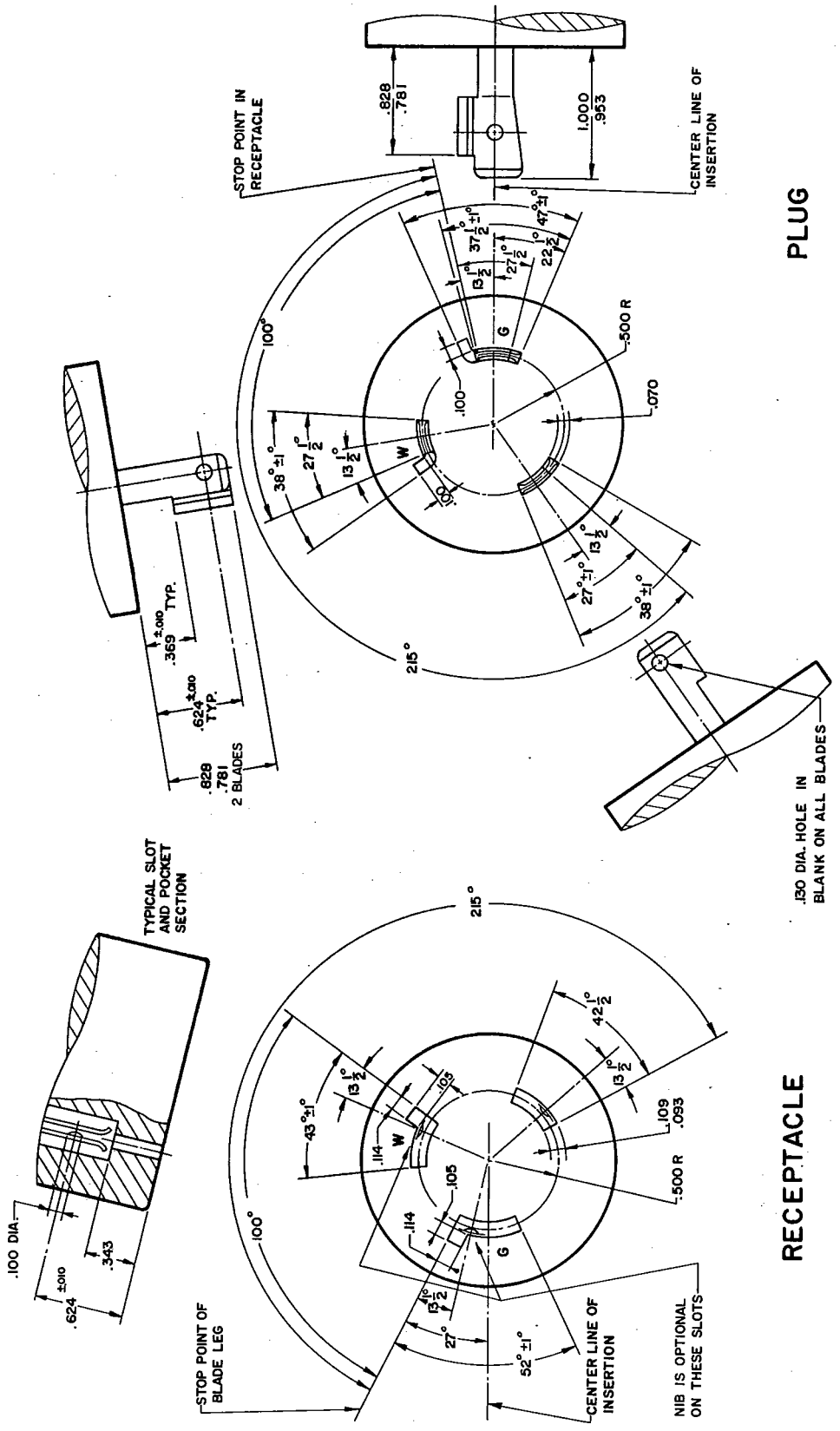

Figure FSL 1
LOCKING TYPE PLUG AND RECEPTACLE
28 volts dc, 30 amperes, 2 pole, 3 wire, grounding type
NEMA Standard 11-3-1983.

Copyright National Electrical Manufacturers Association
Provided by IHS under license with NEMA
No reproduction or networking permitted without license from IHS

Not for Resale

Copyright National Electrical Manufacturers Association
Provided by IHS under license with NEMA
No reproduction or networking permitted without license from IHS
Not for Resale

Figure FSL 2

LOCKING TYPE PLUG AND RECEPTACLE

120 volts, 30 amperes, 400 Hz, 2 pole, 3 wire, grounding type

NEMA Standard 11-3-1983.

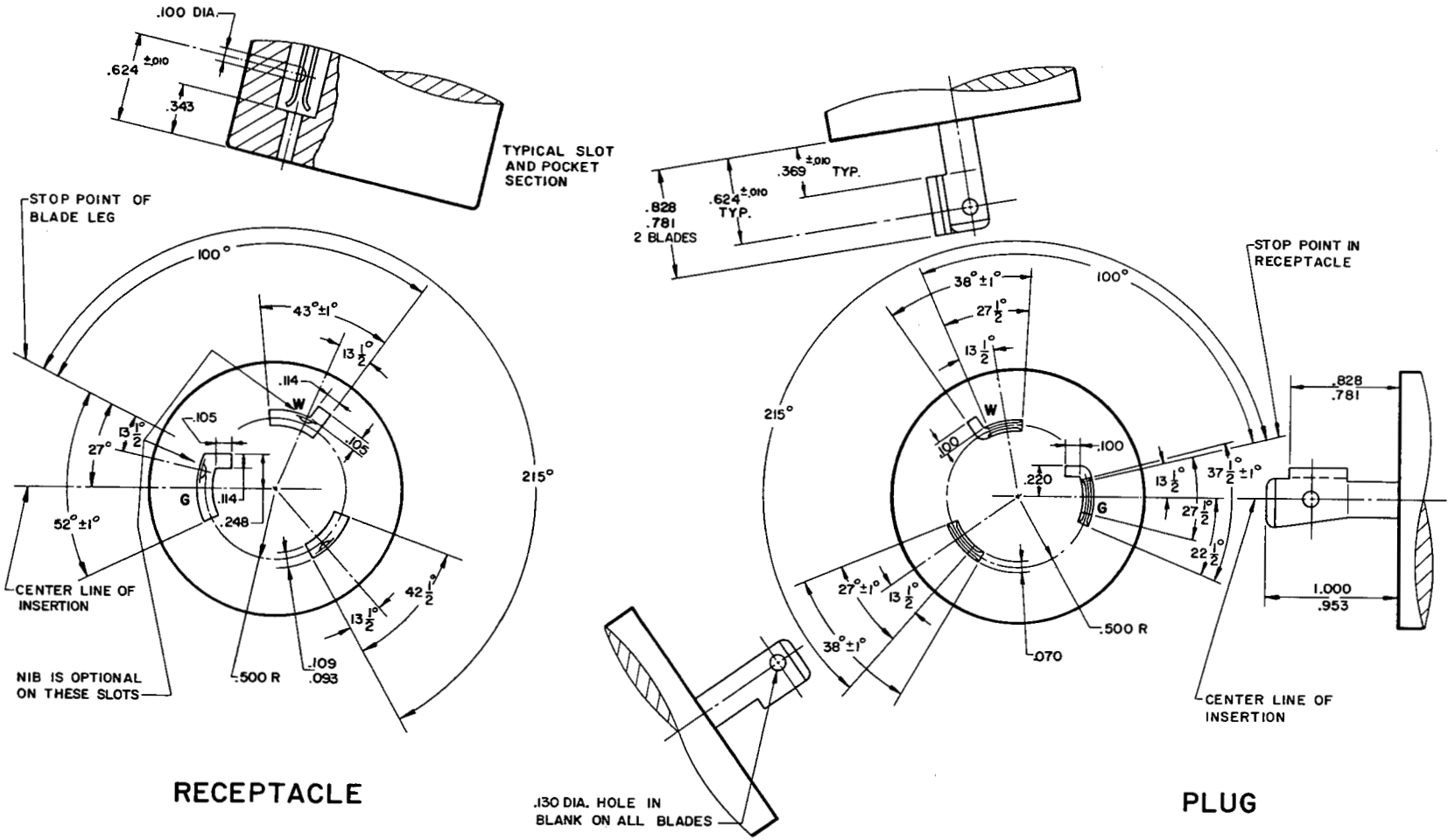

WD 6-88
6470247 0007043 T

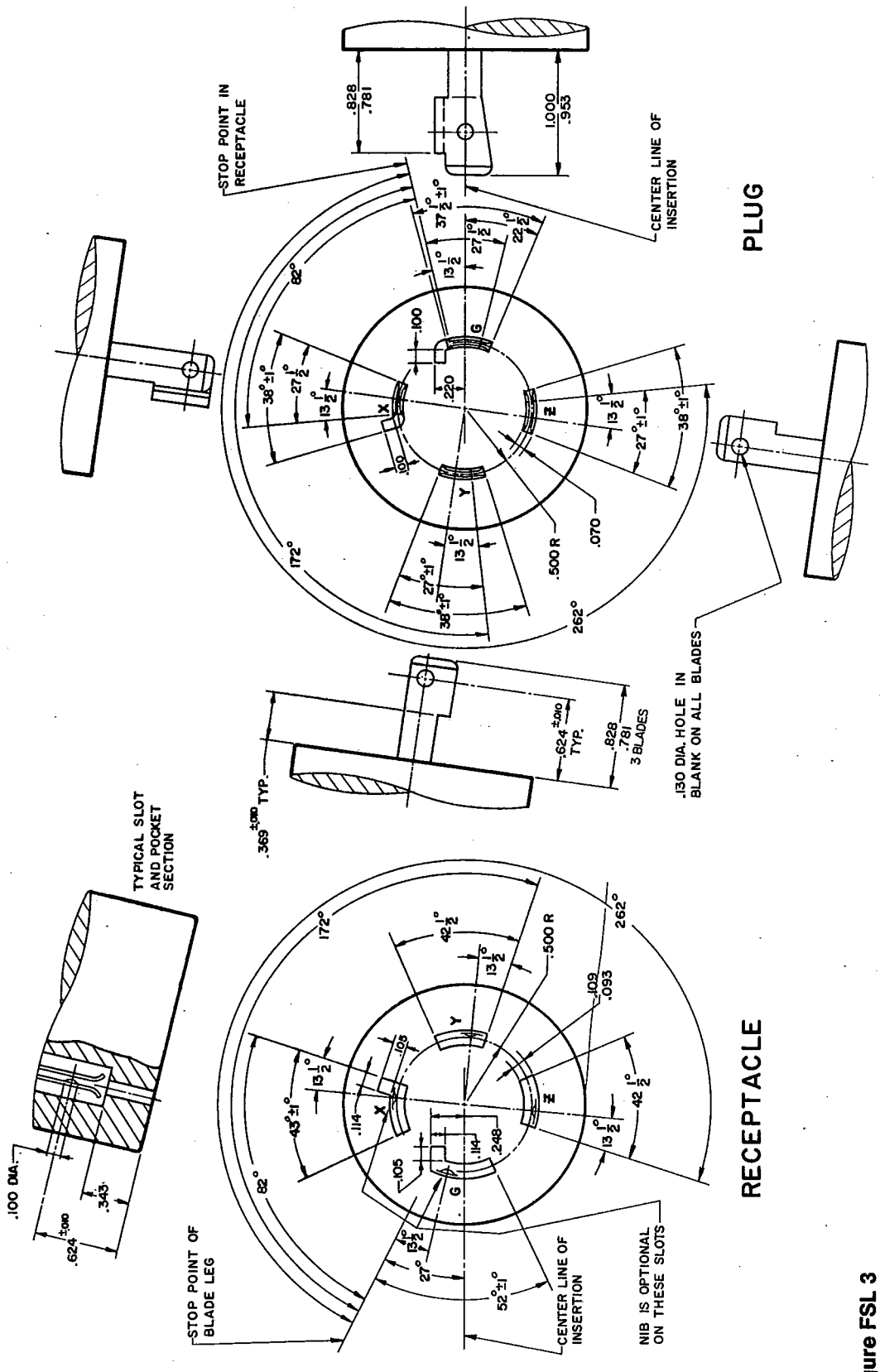

Figure FSL 3
LOCKING TYPE PLUG AND RECEPTACLE
120 volts, 30 amperes, 400 Hz, 3 phase, 3 pole, 4 wire, grounding type
NEMA Standard 11-3-1983.

Copyright National Electrical Manufacturers Association
Provided by IHS under license with NEMA
No reproduction or networking permitted without license from IHS

Not for Resale

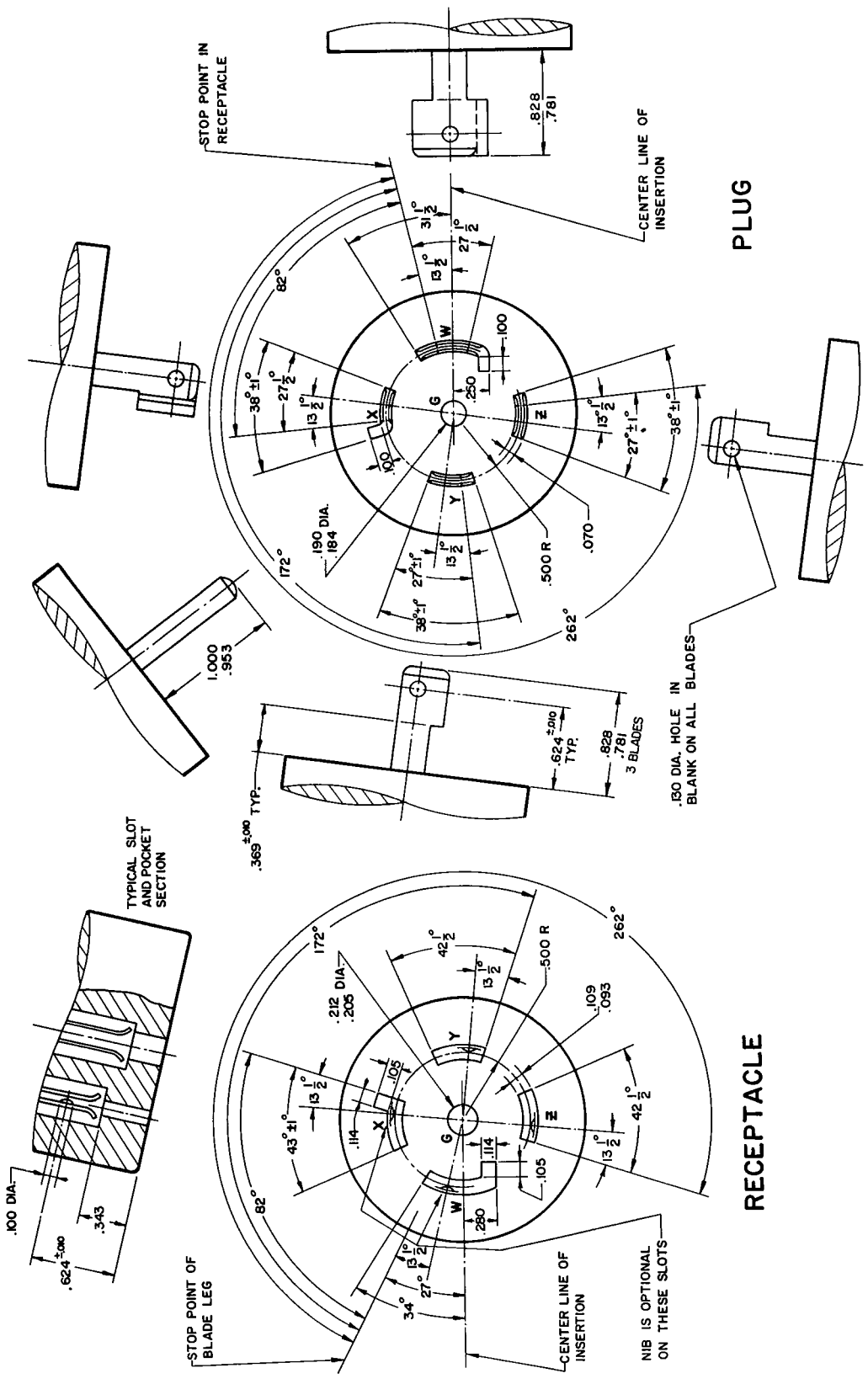

Figure FSL 4
LOCKING TYPE PLUG AND RECEPTACLE
208/120 volts, 30 amperes, 3 phase Y, 400 Hz, 4 pole, 5 wire, grounding type
NEMA Standard 11-3-1983.

Copyright National Electrical Manufacturers Association
Provided by IHS under license with NEMA
No reproduction or networking permitted without license from IHS
Not for Resale

Copyright National Electrical Manufacturers Association
Provided by IHS under license with NEMA
No reproduction or networking permitted without license from IHS
Not for Resale

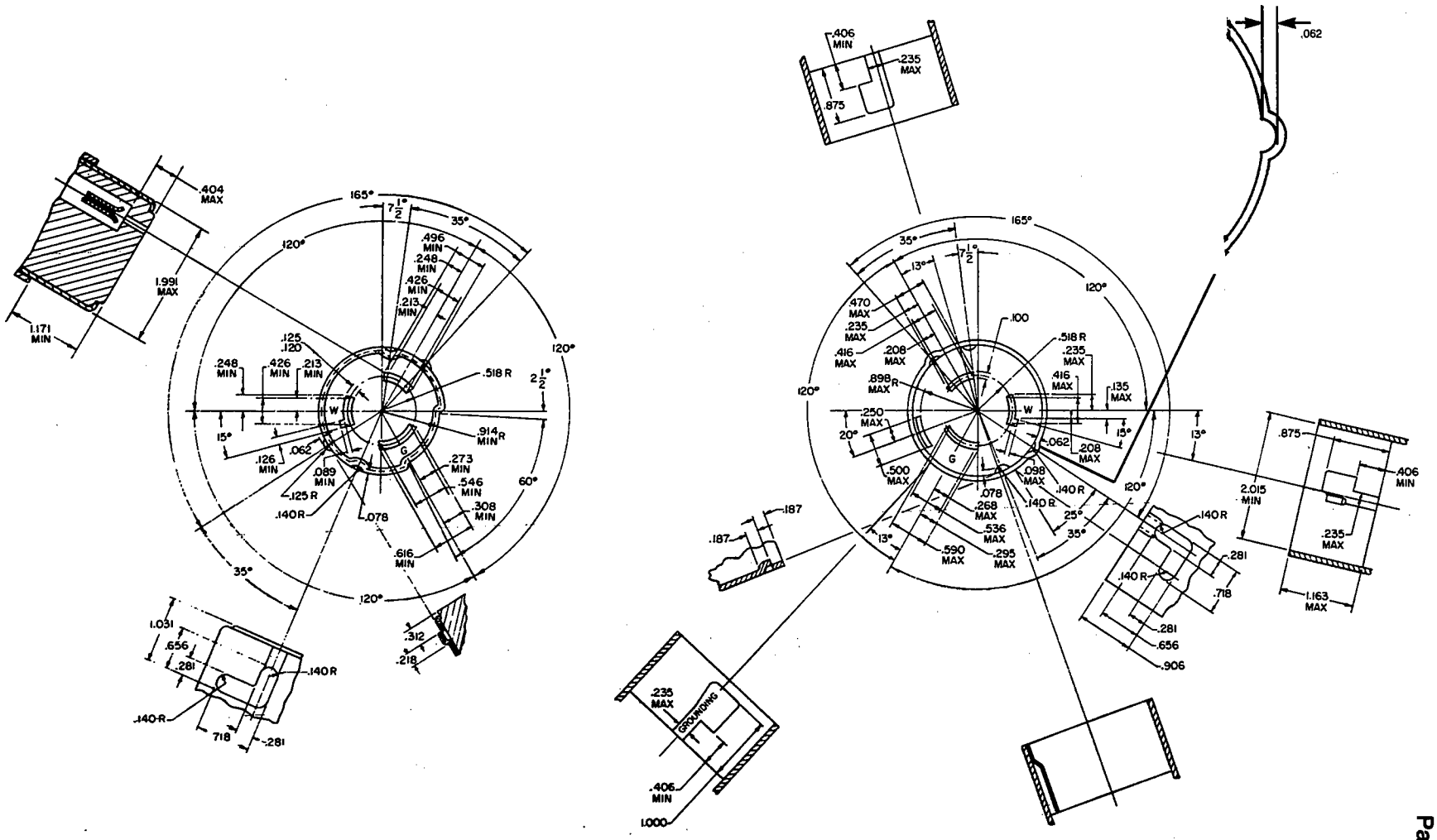

Figure SS-1
LOCKING, GROUNDING TYPE, MARINE SHIP-TO-SHORE USE FOR SMALL CRAFT
250 volts, 30 amperes, 3 phase, 3 pole, 3 wire

NEMA Standard 11-3-1983.

6470247 0007046 5

Figure SS-2
LOCKING, GROUNDING TYPE, MARINE SHIP-TO-SHORE USE FOR SMALL CRAFT
125/250 volts, 50 amperes, 3 pole, 4 wire

NEMA Standard 11-3-1983.

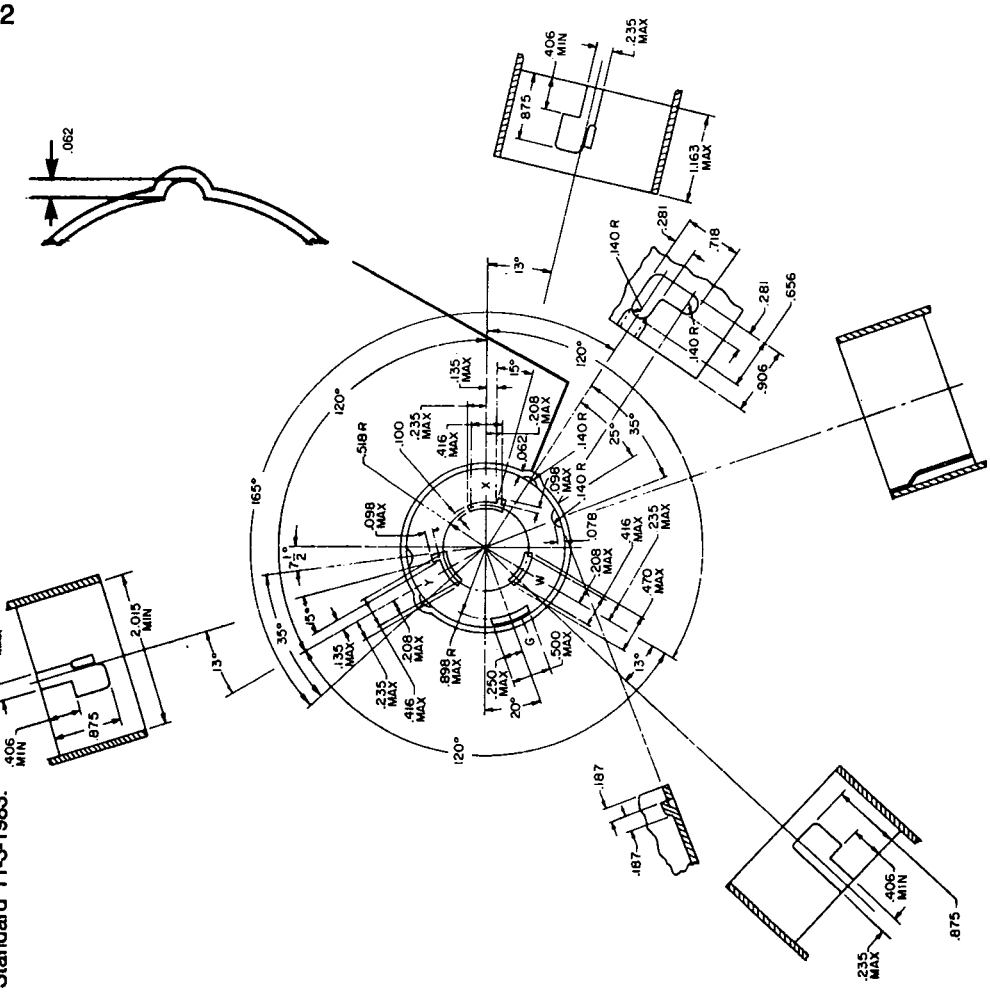

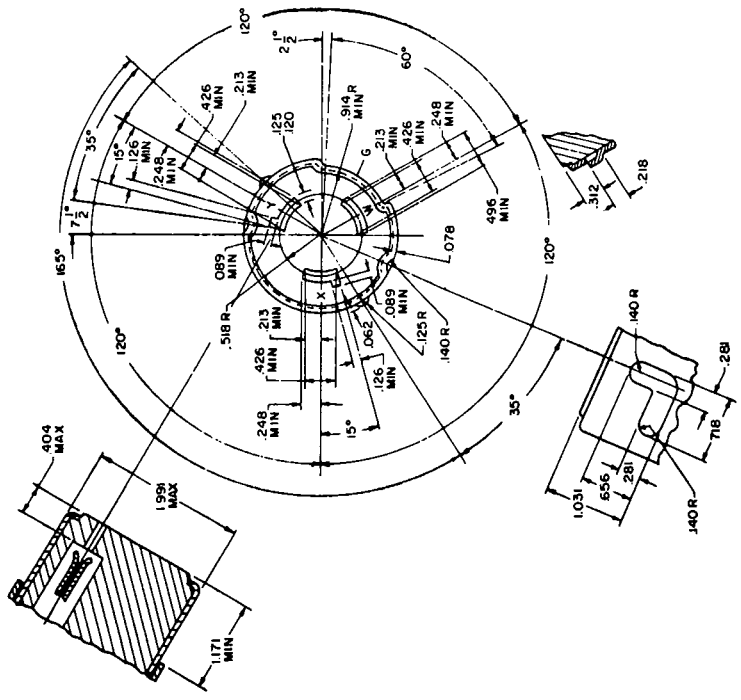

Copyright National Electrical Manufacturers Association
Provided by IHS under license with NEMA
No reproduction or networking permitted without license from IHS

Not for Resale

Figure TT
TRAVEL TRAILER USE ONLY
125 volts, 30 amperes, 2 pole, 3 wire, grounding type
NEMA Standard 11-3-1983.

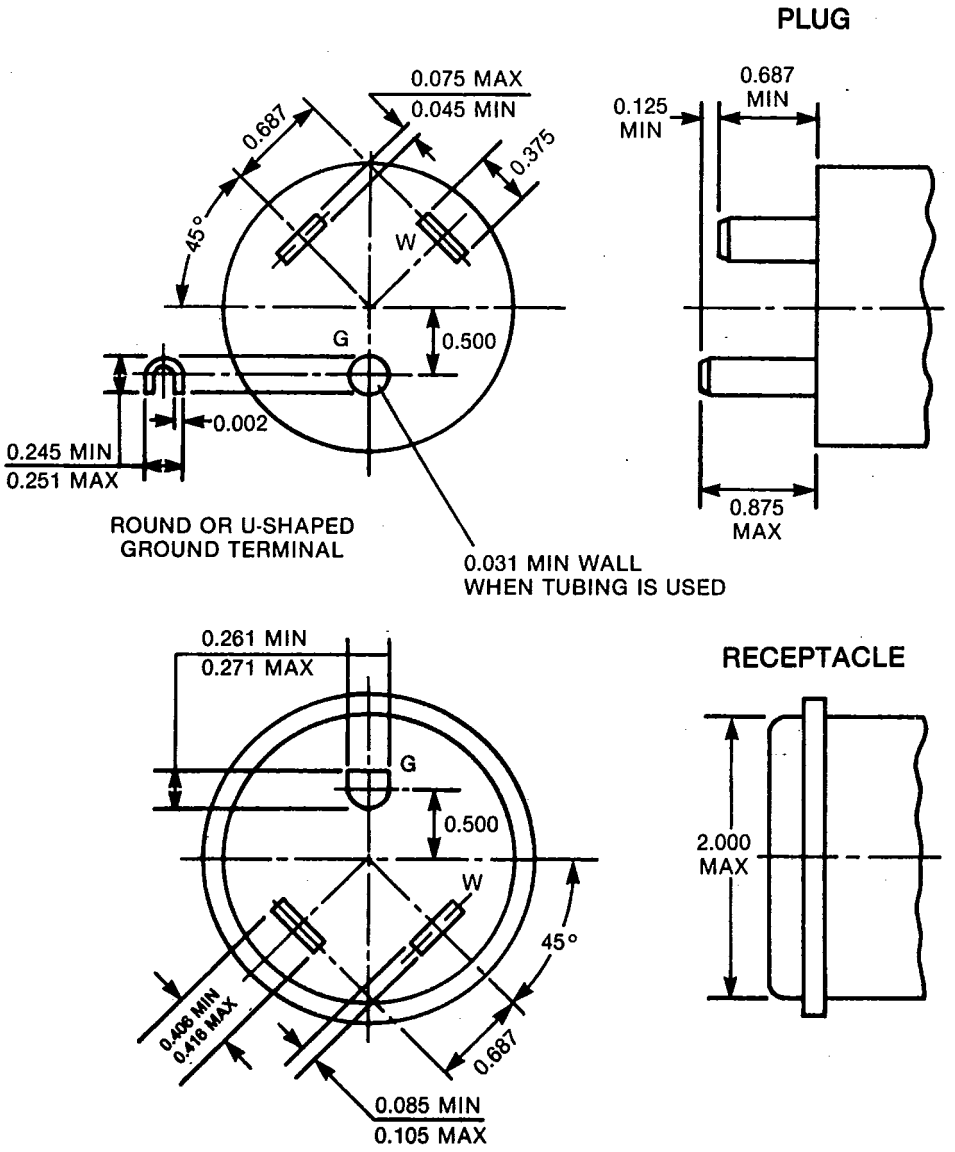

Copyright National Electrical Manufacturers Association
Provided by IHS under license with NEMA
No reproduction or networking permitted without license from IHS
Not for Resale

NEMA CONFIGURATIONS FOR SPECIFIC PURPOSE PLUGS AND RECEPTACLES

			15 AMPERE		30 AMPERE		50 AMPERE	
			RECEPTACLE	PLUG	RECEPTACLE	PLUG	RECEPTACLE	PLUG
MIDGET LOCKING	2 POLE 2 WIRE	125V ML1	ML1-15R 	ML1-15P 				
	2 POLE 3 WIRE GROUNDING	125 V ML2	ML2-15R 	ML2-15P 				
	3 POLE 3 WIRE	125/250 V ML3	ML3-15R 	ML3-15P 				
FSL CONFIGURATIONS	2 POLE 3 WIRE GROUNDING	28 V DC FSL1			FSL1-30R 	FSL1-30P 		
	2 POLE 3 WIRE GROUNDING	120 V 1 PHASE 400 HERTZ FSL2			FSL2-30R 	FSL2-30P 		
	3 POLE 4 WIRE GROUNDING	120 V 3 ∅ Δ 400 HERTZ FSL3			FSL3 30R 	FSL3 30P 		
	4 POLE 5 WIRE GROUNDING	120/208 V 3 ∅Y 400 HERTZ FSL4			FSL4 30R 	FSL4 30P 		
MARINE SHIP-TO-SHORE	2 POLE 3 WIRE GROUNDING	120 V AC SS1					SS1-50R 	SS1-50P 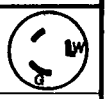
	3 POLE 4 WIRE GROUNDING	125/250 V AC SS2					SS2-50R 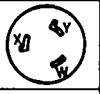	SS-2 50P 
TRAVEL TRAILER	2 POLE 3 WIRE GROUNDING	125 V AC TT			TT-30R 	TT-30P 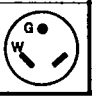		

Copyright National Electrical Manufacturers Association
Provided by IHS under license with NEMA
No reproduction or networking permitted without license from IHS
Not for Resale

NEMA CONFIGURATIONS FOR PLUGS AND RECEPTACLES

LOCKING PLUGS AND RECEPTACLES

		15 AMPERE		20 AMPERE		30 AMPERE		50 AMPERE		60 AMPERE	
		RECEPTACLE	PLUG	RECEPTACLE	PLUG	RECEPTACLE	PLUG	RECEPTACLE	PLUG	RECEPTACLE	PLUG
2-POLE 2-WIRE	1 — 125 V	1-15R	1-15P		1-20P		1-30P				
	2 — 250 V		2-15P	2-20R	2-20P	2-30R	2-30P				
	3 — 277 V AC				(RESERVED FOR FUTURE CONFIGURATIONS)						
	4 — 600 V				(RESERVED FOR FUTURE CONFIGURATIONS)						
2-POLE 3-WIRE GROUNDING	5 — 125 V	5-15R	5-15P	5-20R	5-20P	5-30R	5-30P	5-50R	5-50P		
	6 — 250 V	6-15R	6-15P	6-20R	6-20P	6-30R	6-30P	6-50R	6-50P		
	7 — 277 V AC	7-15R	7-15P	7-20R	7-20P	7-30R	7-30P	7-50R	7-50P		
	24 — 347 V AC	24-15R	24-15P	24-20R	24-20P	24-30R	24-30P	24-50R	24-50P		
	8 — 480 V AC				(RESERVED FOR FUTURE CONFIGURATIONS)						
	9 — 600 V AC				(RESERVED FOR FUTURE CONFIGURATIONS)						
3-POLE 3-WIRE	10 — 125/250 V			10-20R	10-20P	10-30R	10-30P	10-50R	10-50P		
	11 — 3 Ø 250 V	11-15R	11-15P	11-20R	11-20P	11-30R	11-30P	11-50R	11-50P		
	12 — 3 Ø 480 V				(RESERVED FOR FUTURE CONFIGURATIONS)						
	13 — 3 Ø 600 V				(RESERVED FOR FUTURE CONFIGURATIONS)						
3-POLE 4-WIRE GROUNDING	14 — 125/250 V	14-15R	14-15P	14-20R	14-20P	14-30R	14-30P	14-50R	14-50P	14-60R	14-60P
	15 — 3 Ø 250 V	15-15R	15-15P	15-20R	15-20P	15-30R	15-30P	15-50R	15-50P	15-60R	15-60P
	16 — 3 Ø 480 V				(RESERVED FOR FUTURE CONFIGURATIONS)						
	17 — 3 Ø 600 V				(RESERVED FOR FUTURE CONFIGURATIONS)						
4-POLE 4-WIRE	18 — 3 Ø 208Y/120 V	18-15R	18-15P	18-20R	18-20P	18-30R	18-30P	18-50R	18-50P	18-60R	18-60P
	19 — 3 Ø 480Y/277 V				(RESERVED FOR FUTURE CONFIGURATIONS)						
	20 — 3 Ø 600Y/347 V				(RESERVED FOR FUTURE CONFIGURATIONS)						
4-POLE 5-WIRE GROUNDING	21 — 3 Ø 208Y/120 V				(RESERVED FOR FUTURE CONFIGURATIONS)						
	22 — 3 Ø 480Y/277 V				(RESERVED FOR FUTURE CONFIGURATIONS)						
	23 — 3 Ø 600Y/347 V				(RESERVED FOR FUTURE CONFIGURATIONS)						

Copyright National Electrical Manufacturers Association
Provided by IHS under license with NEMA
No reproduction or networking permitted without license from IHS
Not for Resale

WD 6-88 6470247 0007051 9

			15 AMPERE		20 AMPERE		30 AMPERE		50 AMPERE		60 AMPERE	
			RECEPTACLE	PLUG	RECEPTACLE	PLUG	RECEPTACLE	PLUG	RECEPTACLE	PLUG	RECEPTACLE	PLUG
2-POLE 2-WIRE	125 V	L1	L1-15R	L1-15P								
	250 V	L2			L2-20R	L2-20P						
	277 V AC	3				(RESERVED FOR FUTURE CONFIGURATIONS)						
	600 V	4				(RESERVED FOR FUTURE CONFIGURATIONS)						
2-POLE 3-WIRE GROUNDING	125 V	5	L5-15R	L5-15P	L5-20R	L5-20P	L5-30R	L5-30P	L5-50R	L6-50P	L5-60R	L5-60P
	250 V	6	L6-15R	L6-15P	L6-20R	L6-20P	L6-30R	L6-30P	L6-50R	L6-50P	L6-60R	L6-60P
	277 V AC	7	L7-15R	L7-15P	L7-20R	L7-20P	L7-30R	L7-30P	L7-50R	L7-50P	L7-60R	L7-60P
	347 V AC	24			L24-20R	L24-20P						
	480 V AC	8			L8-20R	L8-20P	L8-30R	L8-30P	L8-50R	L8-50P	L8-60R	L8-60P
	600 V AC	9			L9-20R	L9-20P	L9-30R	L9-30P	L9-50R	L9-50P	L9-60R	L9-60P
3-POLE 3-WIRE	125/250 V	10			L10-20R	L10-20P	L10-30R	L10 30P				
	3 Ø 250 V	11	L11-15R	L11-15P	L11-20R	L11-20P	L11-30R	L11-30P				
	3 Ø 480 V	12			L12-20R	L12-20P	L12-30R	L12-30P				
	3 Ø 600 V	13					L13-30R	L13-30P				
3-POLE 4-WIRE GROUNDING	125/250 V	14			L14-20R	L14-20P	L14-30R	L14-30P	L14-50R	L14-50P	L14-60R	L14-60P
	3 Ø 250 V	15			L15-20R	L15-20P	L15-30R	L15-30P	L15-50R	L15-50P	L15-60R	L15-60P
	3 Ø 480 V	16			L16-20R	L16-20P	L16-30R	L16-30P	L16-50R	L16-50P	L16-60R	L16-60P
	3 Ø 600 V	17					L17-30R	L17-30P	L17-50R	L17-50P	L17-60R	L17-60P
4-POLE 4-WIRE	3 Ø 208Y/120 V	18			L18-20R	L18-20P	L18-30R	L18-30P				
	3 Ø 480Y/277 V	19			L19-20R	L19-20P	L19-30R	L19-30P				
	3 Ø 600Y/347 V	20			L20-20R	L20-20P	L20-30R	L20-30P				
4-POLE 5-WIRE GROUNDING	3 Ø 208Y/120 V	21			L21-20R	L21-20P	L21-30R	L21-30P	L21-50R	L21-50P	L21-60R	L21-60P
	3 Ø 480Y/277 V	22			L22-20R	L22-20P	L22-30R	L22-30P	L22-50R	L22-50P	L22-60R	L22-60P
	3 Ø 600Y/347 V	23			L23-20R	L23-20P	L23-30R	L23-30P	L23-50R	L23-50P	L23-60R	L23-60P

Copyright National Electrical Manufacturers Association
Provided by IHS under license with NEMA
No reproduction or networking permitted without license from IHS
Not for Resale

Copyright National Electrical Manufacturers Association
Provided by IHS under license with NEMA
No reproduction or networking permitted without license from IHS

Appendix
METRIC CONVERSION TABLES

IN	MM	IN	MM	IN	MM	IN	MM	IN	MM	IN	MM	IN	MM	IN	MM	IN	MM	IN	MM	IN	MM	IN	MM
0.005	0.13	0.105	2.67	0.196	4.98	0.253	6.43	0.310	7.87	0.404	10.26	0.532	13.51	0.718	18.24	0.920	23.37	1.245	31.13	1.604	40.74	2.250	57.15
0.010	0.25	0.109	2.77	0.198	5.03	0.255	6.48	0.312	7.92	0.406	10.31	0.536	13.61	0.719	18.26	0.921	23.39	1.250	31.75	1.610	40.89	2.265	57.53
0.015	0.38	0.114	2.90	0.200	5.08	0.257	6.53	0.315	8.00	0.416	10.57	0.540	13.72	0.734	18.64	0.922	23.42	1.263	32.08	1.625	41.28	2.281	57.94
0.031	0.79	0.115	2.92	0.205	5.21	0.260	6.60	0.322	8.18	0.420	10.67	0.546	13.87	0.750	19.05	0.925	23.50	1.300	33.02	1.640	41.66	2.375	60.33
0.040	1.02	0.120	3.05	0.208	5.28	0.261	6.63	0.324	8.23	0.426	10.82	0.557	14.15	0.765	19.43	0.953	24.21	1.310	33.27	1.646	41.81	2.405	61.09
0.047	1.52	0.125	3.18	0.212	5.38	0.264	6.71	0.328	8.33	0.437	11.10	0.560	14.22	0.777	19.74	1.000	25.40	1.312	33.32	1.664	42.27	2.437	61.90
0.060	1.57	0.126	3.20	0.213	5.41	0.265	6.73	0.329	8.36	0.445	11.30	0.562	14.27	0.781	19.84	1.028	26.11	1.320	33.53	1.675	42.55	2.452	62.28
0.062	1.57	0.130	3.30	0.215	5.46	0.266	6.76	0.330	8.38	0.450	11.43	0.567	14.40	0.797	20.25	1.031	26.19	1.327	33.71	1.705	43.31	2.468	62.69
0.065	1.65	0.135	3.43	0.218	5.54	0.268	6.81	0.340	8.64	0.454	11.53	0.590	14.99	0.812	20.62	1.060	26.92	1.330	33.79	1.711	43.46	2.620	66.55
0.070	1.78	0.140	3.56	0.220	5.59	0.271	6.88	0.343	8.71	0.460	11.68	0.593	15.06	0.820	20.83	1.062	26.97	1.343	34.11	1.729	43.92	2.630	66.80
0.074	1.88	0.150	3.81	0.221	5.61	0.273	6.93	0.345	8.76	0.464	11.79	0.594	15.09	0.828	21.03	1.070	27.18	1.360	34.54	1.750	44.45	2.750	69.85
0.075	1.91	0.156	3.96	0.225	5.72	0.276	7.01	0.350	8.89	0.468	11.88	0.609	15.47	0.843	21.41	1.109	28.17	1.374	34.90	1.800	45.72	2.780	70.61
0.078	1.98	0.160	4.06	0.228	5.79	0.280	7.11	0.359	9.12	0.470	11.94	0.618	15.70	0.844	21.44	1.125	28.58	1.380	35.05	1.812	46.02	2.880	71.12
0.083	2.11	0.162	4.11	0.230	5.84	0.281	7.14	0.360	9.14	0.475	12.07	0.624	15.85	0.875	22.23	1.163	29.54	1.390	35.41	1.844	46.84	2.890	73.41
0.085	2.16	0.163	4.14	0.234	5.94	0.285	7.24	0.369	9.37	0.490	12.45	0.625	15.88	0.884	22.45	1.171	29.74	1.396	35.46	2.000	50.80	3.281	83.34
0.089	2.26	0.165	4.19	0.235	5.97	0.290	7.37	0.370	9.40	0.496	12.60	0.629	15.98	0.890	22.61	1.172	29.77	1.406	35.71	2.015	51.18	3.750	95.25
0.090	2.29	0.170	4.32	0.240	6.10	0.295	7.49	0.375	9.53	0.500	12.70	0.640	16.26	0.895	22.73	1.181	30.00	1.414	35.92	2.093	53.16	3.812	96.82
0.093	2.36	0.180	4.57	0.245	6.22	0.296	7.52	0.385	9.78	0.510	12.95	0.650	16.51	0.898	22.81	1.187	30.15	1.531	38.89	2.125	53.98	4.120	104.65
0.094	2.39	0.182	4.62	0.246	6.25	0.297	7.54	0.390	9.91	0.515	13.08	0.656	16.66	0.906	23.01	1.205	30.61	1.550	39.37	2.140	54.36	4.200	106.68
0.095	2.41	0.184	4.67	0.248	6.30	0.302	7.68	0.396	10.06	0.518	13.16	0.665	16.89	0.914	23.22	1.218	30.94	1.580	40.13	2.156	54.76	4.500	114.30
0.098	2.49	0.187	4.75	0.250	6.35	0.307	7.60	0.400	10.16	0.521	13.23	0.666	16.92	0.915	23.24	1.225	31.12	1.586	40.28	2.175	55.25		
0.100	2.54	0.190	4.83	0.251	6.37	0.309	7.85	0.401	10.19	0.531	13.49	0.687	17.45	0.916	23.27	1.235	31.37	1.593	40.46	2.218	56.34		

Not for Resale

NEMA STANDARDIZATION

The purpose of NEMA Standards, their classification and status, are set forth in certain clauses of the NEMA *Standardization Policies and Procedures* manual and are referenced below.

Purpose of Standards

National Electrical Manufacturers Association Standards are adopted in the public interest and are designed to eliminate misunderstandings between the manufacturer and the purchaser and to assist the purchaser in selecting and obtaining the proper product for its particular need. Existence of a National Electrical Manufacturers Association Standard does not in any respect preclude any member or nonmember from manufacturing or selling products not conforming to the standard. *(Standardization Policies and Procedures, p. 1)*

Definition of a Standard

A standard of the National Electrical Manufacturers Association defines a product, process, or procedure with reference to one or more of the following: nomenclature, composition, construction, dimensions, tolerances, safety, operating characteristics, performance, rating, testing, and the service for which they are designed.

(Standardization Policies and Procedures, p. 2)

Dimensions

Where dimensions are given for interchangeability purposes, alternate dimensions satisfying the other provisions of the standards publication may be capable of otherwise equivalent performance.

(Standardization Policies and Procedures, p. 9)

Classes of Standards

National Electrical Manufacturers Association Standards are of two classes:

1. NEMA Standard, which relates to a product commercially standardized and subject to repetitive manufacture, which standard has been approved by at least 90 percent of the members of the Subdivision eligible to vote thereon;
2. Suggested Standard for Future Design, which may not have been regularly applied to a commercial product, but which suggests a sound engineering approach to future development, which standard has been approved by at least two-thirds of the members of the Subdivision eligible to vote thereon.

(Standardization Policies and Procedures, pp. 8 & 17)

Authorized Engineering Information

Authorized Engineering Information consists of explanatory data and other engineering information of an informative character not falling within the classification of NEMA Standard or Suggested Standard for Future Design, which standard has been approved by at least two-thirds of the members of the Subdivision eligible to vote on the standard.

(Standardization Policies and Procedures, pp. 8 & 17)

Official Standards Proposal

An Official Standards Proposal is an official draft of a proposed standard which is formally recommended to an outside organization(s) for consideration, comment, and/or approval, and which has been approved by at least 90 percent of the members of the Subdivision eligible to vote thereon.

(Standardization Policies and Procedures, pp. 8 & 17)

Identification of Status

Standards in NEMA Standards Publications are identified in the foreword or following each standard as "NEMA Standard" or "Suggested Standard for Future Design." These indicate the status of the standard. These words are followed by a date which indicates when the standard was adopted in its present form by the Association.

The material identified as "Authorized Engineering Information" and "Official Standards Proposal" is designated similarly.

Copyright National Electrical Manufacturers Association
Provided by IHS under license with NEMA
No reproduction or networking permitted without license from IHS
Not for Resale

WD 6-88 6470247 0007054 4

WIRING DEVICE SECTION
OF THE
NATIONAL ELECTRICAL MANUFACTURERS ASSOCIATION

MEMBER COMPANIES

American Electric
FL Industries, Inc.
Pittsburgh, PA 15237-4161

AMP Incorporated
Harrisburg, PA 17105

USD Products
Bussmann Division of Cooper Industries
Chicago, IL 60656

Challenger Circle F, Inc.
Trenton, NJ 08604

Cooper Electrical Distribution Products
Charlottesville, VA 22906

Daniel Woodhead Company
Sub. of Woodhead Industries, Inc.
Northbrook, IL 60062

Eagle Electric Manufacturing Company, Inc.
Long Island City, NY 11101

Ericson Manufacturing Company, Inc.
Willoughby, OH 44094

GE
Warwick, RI 02886

Hubbell Incorporated
Bridgeport, CT 06605

Leviton Manufacturing Company, Inc.
Little Neck, NY 11362

Lutron Electronics Company, Inc.
Coopersburg, PA 18036

Marinco/Marine Industries Co.
Novato, CA 94949

McGill Manufacturing Company, Inc.
Valparaiso, IN 46383

Pass & Seymour, Inc.
Syracuse, NY 13221

SL Waber Inc.
Mt. Laurel, NJ 08504

Thomas & Betts Corporation
Bridgewater, NJ 08807-0993

Bryant Electric Company, Div. of
Westinghouse Electric Corporation
Milford, CT 06460-2465

The Wiremold Company
West Hartford , CT 06110

Copyright National Electrical Manufacturers Association
Provided by IHS under license with NEMA
No reproduction or networking permitted without license from IHS
Not for Resale