| NOTICE OF |
| ADOPTION |

ADOPTION NOTICE 1
24 January 1992 for
NEMA WD 1-1983 (R 1989)
1990*

NEMA WD 1-1983 (R 1989) was adopted on 24 January 1992 and is approved for use by the Department of Defense (DoD). The National Electrical Manufacturers Association has furnished the clearance required by existing regulations. Copies of the document are stocked at the Standardization Documents Order Desk, Bldg. 4D, 700 Robbins Avenue, Philadelphia, PA 19111-5094, for issue to DoD activities only. All other requestors must obtain copies from:

National Electrical Manufacturers Association
2101 L Street, N.W.
Washington, DC 20037

Title of Document: General Requirements for Wiring Devices

Date of Specific Issue Adopted: 1990* (No specific date given)

Releasing Non-Government Standards Body: NEMA

Custodian:
Navy - YD

Military Coordinating Activity:
Navy - YD

(Project 5935-N416)

FSC 5935

DISTRIBUTION STATEMENT A. Approved for public release; distribution is unlimited.

Copyright National Electrical Manufacturers Association
Provided by IHS under license with NEMA
No reproduction or networking permitted without license from IHS
Not for Resale

NEMA WD*1 83 ■ 6470247 0019290 T ■ A-07-01

NEMA STANDARDS PUBLICATION NO. WD 1

nema

General Requirements for Wiring Devices

NEMA

NATIONAL ELECTRICAL MANUFACTURERS ASSOCIATION ■ 2101 L STREET, N.W., WASHINGTON, D.C. 20037

Copyright National Electrical Manufacturers Association
Provided by IHS under license with NEMA
No reproduction or networking permitted without license from IHS
Not for Resale

NEMA WD*1 83 ■ 6470247 0019291 1 ■

NEMA WD 1-1983 (R 1989)

WD 1

GENERAL REQUIREMENTS FOR WIRING DEVICES

Published by:

National Electrical Manufacturers Association
2101 L Street, N.W.
Washington, DC 20037

© 1990 by National Electrical Manufacturers Association

Copyright National Electrical Manufacturers Association
Provided by IHS under license with NEMA
No reproduction or networking permitted without license from IHS

Not for Resale

TABLE OF CONTENTS

		Page
	FOREWORD	i
	SCOPE	ii
Section 1	REFERENCED STANDARDS AND DEFINITIONS	1
Section 2	COLORS OF MOLDED COMPOUNDS	3
Section 3	GENERAL-USE SNAP SWITCH THEORY	4
Section 4	GENERAL-DUTY AND HEAVY-DUTY GENERAL-USE SNAP SWITCHES	9
Section 5	SEMICONDUCTOR DIMMERS FOR INCANDESCENT LAMPS	10
Section 6	RECEPTACLES AND ATTACHMENT PLUGS—TERMINAL IDENTIFICATION	15
Section 7	GENERAL-DUTY AND HEAVY-DUTY GENERAL-USE 15- AND 20-AMPERE PLUGS, RECEPTACLES, AND CORD CONNECTORS	16
Section 8	WIRING DEVICES WITH INTEGRAL ENCLOSURES (SELF CONTAINED WIRING DEVICES)	25

Illustrations

Figure 3-1	5
Figure 3-2–3-4	6
Figure 5-1	11
Figure 5-2A–5-2D	12
Figure 5-3	13
Figure 7-1	18
Figure 7-2	19
Figure 7-3	20
Figure 7-4	20
Figure 7-5	21
Figure 7-6	22
Figure 7-7	23
Figure 7-8	22
Figure 7-9	24
Figure 7-10	24
Figure 8-1	26

Copyright National Electrical Manufacturers Association
Provided by IHS under license with NEMA
No reproduction or networking permitted without license from IHS
Not for Resale

Foreword

The purpose of these standards is to list requirements other than dimensional, and to assist the user in selecting and obtaining the proper product for a particular need.

In the preparation of this Standards Publications, input of users and other interested parties has been sought and evaluated. User input will be formally sought by the canvass procedures of American National Standards Institute.

These standards are periodically reviewed by the Wiring Device Section of NEMA for any revisions necessary to keep them up-to-date with advancing technology. Proposed or recommended revisions should be submitted to:

Vice President, Engineering
2101 L Street, N.W.
Washington, DC 20037

NEMA Standards Publication No. WD 1-1983 (R 1989) revises and supersedes portions of NEMA Standards Publication for *General Purpose Wiring Devices,* WD 1-1979; NEMA Standards Publication for *Semiconductor Dimmers for Incandescent Lamps,* WD 2-1970 (R 1975, R 1980); NEMA Standards Publication for *Alternating-Current General-Use Snap Switches,* WD 3-1972 (R 1977); and NEMA Standards Publication for *Specific Purpose Wiring Devices,* WD 5-1977. The remainder of WD 1 and WD 5 is incorporated in a new NEMA Standards Publication for *Wiring Devices – Dimensional Requirements,* WD 6-1988.

Copyright National Electrical Manufacturers Association
Provided by IHS under license with NEMA
No reproduction or networking permitted without license from IHS
Not for Resale

Scope

These standards cover general requirements and authorized engineering information for wiring devices. These requirements include color reference, ac switch operating theory, and test requirements and procedures for switches (including dimmers), receptacles, plugs, and cord connectors.

These standards do not cover dimensional requirements affecting wiring device interchangeability. They are, however, covered in WD 6-1988.

Copyright National Electrical Manufacturers Association
Provided by IHS under license with NEMA
No reproduction or networking permitted without license from IHS
Not for Resale

WIRING DEVICES – GENERAL REQUIREMENTS

Section 1
REFERENCED STANDARDS AND DEFINITIONS

1.1 REFERENCED STANDARDS

In this publication, reference is made to the standards listed below. Copies are available from the indicated sources.

American Society for Testing and Materials
1916 Race Street
Philadelphia, PA 19103

D1535-1980 — *Standard Method of Specifying Color by the Munsell System*

Munsell Color
Macbeth Division of Kollmorgen Corporation
2441 N. Calvert Street
Baltimore, MD 21218

Munsell Book of Color, Glossy Finish Edition, 1976 ed.

National Fire Protection Association
Batterymarch Park
Quincy, MA 02269

NFPA 70-1990 — *National Electrical Code*

Underwriters Laboratories, Inc.
333 Pfingsten Road
Northbrook, IL 60062

ANSI/UL 20-1986* — *General-Use Snap Switches*

ANSI/UL 498-1986* — *Attachment Plugs and Receptacles*

American National Standards Institute
1430 Broadway
New York, NY 10018

C63.2-1987 — *Specifications for Electromagnetic and Field-Strength Instrumentation 10 KHz to 1GHz*

C63.4-1988 — *Methods of Measurement of Emissions from Low-Voltage Electrical and Electronics Equipment in the Range of 10 KHz to 1 GHz*

National Electrical Manufacturers Association
2101 L Street, N.W.
Washington, DC 20037

WD 6-1988 — *Dimensional Requirements for Wiring Devices*

*Also available from the American National Standards Institute

Copyright National Electrical Manufacturers Association
Provided by IHS under license with NEMA
No reproduction or networking permitted without license from IHS
Not for Resale

1.2 DEFINITIONS

CORD CONNECTOR

A cord connector is a portable receptacle which is attached to or provided with means for attachment to a flexible cord and which is not intended for fixed mounting.

GROUNDED CONDUCTOR (SYSTEM GROUND)

A grounded conductor is a circuit conductor (normally current carrying) which is intentionally connected to earth ground. (It is identified by a white or gray insulation.)

GROUNDING CONDUCTOR (EQUIPMENT GROUND)

A grounding conductor is a conductor which connects a noncurrent-carrying metal parts of equipment to the system ground to provide an intentional low impedance path for fault current. (It is bare or is identified by a green or green with yellow stripes insulation.)

INLET (MALE BASE)

An inlet is a plug which is intended for flush or surface mounting on an appliance or equipment and which serves to connect utilization equipment to a cord connector.

OUTLET

An outlet is a point on the wiring system at which current is taken to supply utilization equipment.

PLUG

A plug is a device with male contacts which, when inserted into a receptacle, establishes connection between the conductors of the attached flexible cord and the conductors connected to the receptacle.

POLARIZATION (PLUGS AND RECEPTACLES)

Polarization is a means of assuring the mating of plugs and receptacles of the same rating in only the correct position.

POLE

The term "pole" as used in designating plugs and receptacles refers to a terminal to which a circuit conductor (normally current carrying) is connected.

In switches, the number of poles indicates the number of conductors being controlled.

RECEPTACLE

A receptacle is a device with female contacts which is primarily installed at an outlet or on equipment and which is intended to establish electrical connection with an inserted plug.

SLANT SYMBOL (/)

The "slant" line (/) as used in wiring device rating indicates that two or more voltage potentials are present simultaneously between different terminals of a wiring device.

SWITCH

A switch is a device for making, breaking, or changing the connections in an electric circuit.

1. *Single-pole Switch (Single-pole Single-throw)*

A switch which makes or breaks the connection of one conductor.

2. *Double-pole Switch (Double-pole Single-throw)*

A switch which makes or breaks the connection of two conductors of a single branch circuit.

3. *Three-way Switch (Single-pole Double-throw)*

A switch which changes the connection of one conductor and which is normally used in pairs to control one utilization equipment from two locations.

4. *Four-way Switch (Double-pole Double-throw Reversing)*

A form of double-pole switch which is used in conjunction with two three-way switches to control one utilization equipment from three or more locations.

TERMINAL (ON A WIRING DEVICE)

A terminal is a fixed location on a wiring device where a conductor is intended to be connected.

WIRE (PLUGS AND RECEPTACLES)

The term "wire" as used in designating plugs and receptacles indicates the total number of conductors to be connected to the wiring device.

NEMA Standard 11-3-1983.

Copyright National Electrical Manufacturers Association
Provided by IHS under license with NEMA
No reproduction or networking permitted without license from IHS
Not for Resale

Section 2
COLORS OF MOLDED COMPOUNDS

The following colors of molded compounds of wiring devices are defined by the following Munsell notations:

Color	Munsell Notation
Ivory	4.9Y 7.70/2.3
White	8.1Y 8.84/0.2
Grey	N6/
Brown	1.6YR 1.24/1.1
Red	6R 3.55/13.75
Yellow	6.25Y8/12
Black	N1/
Orange	10R5/16

The Munsell Notation identifies color in terms of three attributes: hue, value and chroma.

The hue (H) notation of a color indicates its relation to a visually equally spaced scale of 100 hues.

The value (V) notation indicates the lightness or darkness or a color in relation to a neutral gray scale, which extends from absolute black to absolute white.

The chroma (C) notation indicates the degree of departure of a given hue from a neutral gray or the same value. The scale of chroma extends from /0 for a neutral gray out to /12, /14 or further, depending upon the strength (saturation) of the sample to be evaluated.

The complete Munsell Notation for a chromatic color is written symbolically: Hv/C. The complete notation for a sample of ivory color for example, is 5Y8/2, while the notation for a neutral color is written NV/. For example, the notation of black color is N1/.

American Society for Testing and Materials (ASTM) *Standard Method of Specifying Color by the Munsell System D 1535* provides description of the Munsell Notations. (See Section 1.) For detailed description and understanding of the Munsell Color System, refer to the Munsell Book of Color (see Section 1).

Authorized Engineering Information 11-3-1983.

Copyright National Electrical Manufacturers Association
Provided by IHS under license with NEMA
No reproduction or networking permitted without license from IHS

Not for Resale

Section 3
GENERAL-USE SNAP SWITCH THEORY

3.1 INTRODUCTION

Until the early 1950's, Underwriters' Laboratories, Inc., standards required that general-use snap switches intended for use in branch circuits, such as wall switches for lighting control, be designed to handle both direct and alternating electrical currents. These ac/dc snap switches were developed in the early 1900's when switches were needed for use on dc circuits in some communities and on ac circuits in others.

The electrical and mechanical requirements for making and breaking dc circuits are, in many respects, not applicable to ac circuits. As a result, the operating mechanisms used for ac/dc snap switches are not the optimum for either ac or dc service, but a combination which would give satisfactory performance on both.

After World War II most electric utilities supplied only alternating current, and it became apparent that a switch might be designed for use on alternating current only which would not need the compromises previously required for both ac and dc use.

In developing the ac-only switches, the electrical industry found that improved performance was obtainable and, working with Underwriters' Laboratories, Inc., developed standards which established higher performance levels for these switches than for ac/dc switches.

The following discussion outlines some of the electrical conditions under which each type of switch must operate, and why the two types are different.

Authorized Engineering Information 11-3-1983.

3.2 ARC AT OPENING

While a circuit is being opened, there is an initial period of a few milliseconds during which the switch contacts are neither fully engaged with each other nor completely separated. As the area of contact diminishes, the effective resistance increases. As the switch opens under load, the flow of current through the increasing electrical resistance results in higher temperatures. Spots on the surfaces of the contacts become molten and emit ions of vaporized metal into the growing gap between the contacts. This hot ionized vapor is electrically conductive and permits the current to continue to flow but in the form of an arc which produces additional heat injurious to the contact surfaces.

The switch design should be such that the arc and the contact erosion caused by the arc are minimized at each contact opening.

Authorized Engineering Information 11-3-1983.

3.3 ARC AT CLOSING

Arcing may also occur when the switch contacts are being closed and may be initiated in one of two ways: (1) the electrostatic field in the gap between the contacts increases until a voltage breakdown occurs or (2) as the contacts approach each other, a whisker or asperity touches first and melts, causing an ionized path which allows current to flow. In either case, the arc lasts for only a few millliseconds until the contact surfaces are fully engaged.

An arc starting at any point on either lobe of an ac sine wave will die within ½ cycle or less when voltage drops to zero at Q_1 or Q_2. Average duration of an arc is ¼ cycle.

The switch design should be such that the contacts will close as rapidly as possible without bouncing, thus minimizing the arc at each contact closing. In general, the ac and dc requirements for switch closing are quite similar.

Authorized Engineering Information 3-11-1983.

3.4 DC ARC AND THE DC SWITCH

Unlike the cyclical zero voltage points of the ac system, the continuous dc supply causes current to flow with greater arc stability across a much wider gap than does an ac supply of equal voltage. The arc at opening is extinguished (i.e., the circuit is opened) when the supply voltage becomes insufficient to maintain the arc voltage above its necessary minimum. As the voltage across the arc approaches this minimum, the arc becomes very unstable and will eventually extinguish. After the arc is extinguished, the plasma of the arc dissipates quickly, and dielectric strength of the air space between the contacts increases to its normal value.

The switch design should be such that the contacts will separate rapidly for a distance sufficient to extinguish the arc as soon as possible on opening. It is also necessary to move the contacts together as quickly as possible on closing to prevent undue deterioration of the contact surfaces.

Therefore, dc switches are designed with strong spring mechanisms which operate to quickly separate the contacts a relatively large distance. These mechanisms also produce the equally rapid closing of the contacts which is needed to minimize the duration of the closing arc and its deteriorating effect on the contacts. The force of this rapid closing tends, however, to cause the movable contact to bounce against the fixed contact before coming to rest.

Copyright National Electrical Manufacturers Association
Provided by IHS under license with NEMA
No reproduction or networking permitted without license from IHS

Not for Resale

With each bounce, the arc is reestablished causing additional burning of the contact surfaces.

Authorized Engineering Information 3-11-1983.

3.5 AC ARC AND THE AC SWITCH

A dc arc persists until the contacts are drawn so far apart that the arc becomes unstable and is finally extinguished. An ac arc, on the other hand, tends to be self-extinguishing when a switch is being opened. In contrast to a dc supply of constant voltage, the ac supply has a cyclical voltage which reverses its polarity every 2/240 of a second. Figure 3-1 shows one cycle (4/240 second) of a 60-hertz voltage wave form.

M_1 and M_2 are points of maximum voltage and occur 1/240 and 3/240 seconds after the cycle starts at Q.

Q_1 and Q_2 are null points of zero voltage and occur 2/240 and 4/240 seconds after the cycle starts at Q.

If the contacts open at any time earlier than Q_1, such as A or B, the arc will extinguish in less than 2/240 second when the supply voltage goes through zero at the time designated as Q_1.

Any contact which starts to open before the maximum voltage is reached at M_1 will experience the maximum current for one instant at M_1 before the arc is extinguished at Q_1. Any contact which opens after M_1 will not reach maximum current before the arc is extinguished when the voltage goes through zero at Q_1.

In brief, the average duration of an ac arc is 1/4 cycle, and the maximum duration is never more than 1/2 cycle. Furthermore, during any 1/2 cycle, the maximum arcing current is reached only once.

The situation described in Figure 3-1 becomes more complex when the circuit load is inductive (motors, fluorescent lamp ballasts, etc.) for, in this case, the current trace lags behind the voltage trace in time. This lag is expressed in percent and is more commonly known as power factor. For the purposes of this discussion, it is only necessary to understand that, with anything other than a 100 percent power factor (as shown in Figure 3-1), the zero points and maximum points of the voltage wave and the current wave do not occur simultaneously. Hence, with an inductive load there is never a condition in which the voltage and current are both zero at the same time. At each of the zero current points in a complete cycle, there will be some value of voltage and, conversely, at each of the voltage zero points, some current will be flowing. This, then, can affect the capability of an ac switch mechanism on other than resistance loads.

Authorized Engineering Information 3-11-1983.

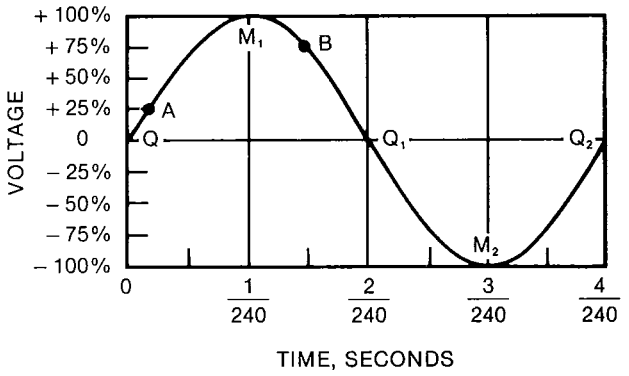

Figure 3-1

3.6 SLOW OPENING DESIRABLE

If contacts are pulled apart rapidly after an arc has formed, the arc will lengthen, causing an increase in the voltage across the gap and a consequent increase in arc energy or destructive effect. Therefore, rapid separation of ac contacts is undesirable.

On the other hand, separating the contacts slowly will keep the gap length short, the voltage across the gap low, and the arc energy low. This lower-energy arc will be extinguished just before the ac voltage goes through zero. After the arc is extinguished, the hot ionized gases in the gap will cool off and disperse into the atmosphere or the contact surfaces. This raises the breakdown voltage of the gap so that the arc does not readily restrike when the ac voltage approaches its next peak.

Authorized Engineering Information 3-11-1983.

3.7 FAST CLOSING DESIRABLE

The mechanism which opens an ac switch slowly must close it rapidly to prevent overheating and excessive erosion of the contacts. To see why this is so, refer to Figure 3-2, where the wave represents the voltage across the contacts.

At some point, such as E_1, while the contacts are closing, the arc will be formed either by a voltage breakdown or a vaporizing whisker or asperity. The voltage across the contacts will fall from the value E_1 to the characteristic arc voltage across the contacts. Now that the arc has formed, it is imperative that it be extinguished quickly by bringing the contacts together until they are fully engaged, such as at point E_2. The time between E_1 and E_2 represents the time when the extreme arc heat damages the contacts.

Copyright National Electrical Manufacturers Association
Provided by IHS under license with NEMA
No reproduction or networking permitted without license from IHS
Not for Resale

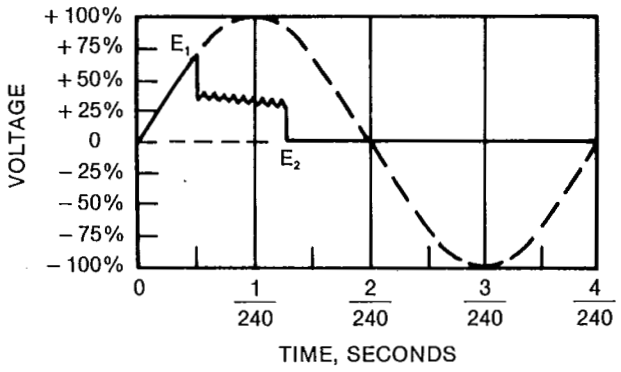

Figure 3-2

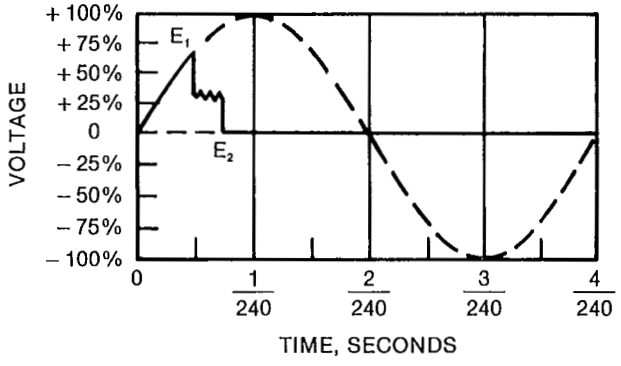

Figure 3-3

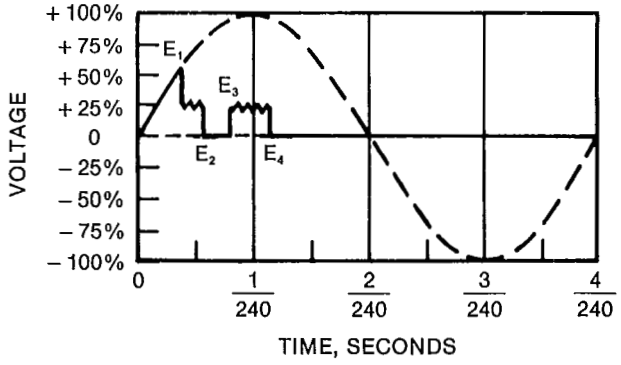

Figure 3-4

Authorized Engineering Information 11-3-1983.

Figure 3-3 shows the wave form of a desirable ac switch closing. Note the short time period between arc ignition at E_1 and extinction at E_2. Figure 3-4 shows the effect of contact bouncing on closing. While the arc ignites at E_1 and extinguishes at E_2 in a relatively short time, the dynamics of the system are such that the contacts bounce open again at E_3 and reform the damaging arc which is extinguished at E_4 when the contacts are again fully engaged.

Authorized Engineering Information 3-11-1983.

3.8 SUMMARY OF FEATURES

Because of the shorter duration and varying amperage of ac arcs, most ac switches have the following desirable characteristics:

1. Compact size because the contacts do not have to be widely and rapidly separated by powerful springs. Excessive spring action is undesirable because:
   a. It causes needless arcing due to the bouncing of the contacts while the circuit is being closed.
   b. It separates the contacts too rapidly when the circuit is being opened.
2. Slow opening to keep the arc voltage and arc energy low until the voltage passes through zero and extinguishes the arc.
3. Fast bounceless closing of the contacts to keep the arc energy low enough to prevent high heat from damaging or welding the contacts.
4. Quieter operation and long life from a lower energy mechanical mechanism.
5. Silver alloy contacts which give increased reliability over the life of the switch.

Authorized Engineering Information 3-11-1983.

3.9 AC/DC GENERAL-USE SNAP SWITCHES

All ac/dc snap switches are rated in amperes at one or more voltages and are suitable for controlling and carrying their marked rating on either direct or alternating-current circuits.

While many of these snap switches will operate successfully on circuits which have some reactance, in general, an inductive load should not exceed one half of the ampere rating of the switch at the voltage involved. However, some of these snap switches are marked with additional horsepower ratings at one or more voltages which indicate that a switch which is so marked has been tested for its ability to control a motor having the horsepower and voltage ratings indicated.

Ac/dc general-use snap switches are tested for control of resistive, inductive, and when T rated, tungsten-filament loads. Switches may be used to their full rating on resistive loads and up to their T rated capacity. Inductive loads should not exceed 50 percent of the switch ampere rating. Horsepower rated switches are usable within their rating.

Authorized Engineering Information 3-11-1983.

Copyright National Electrical Manufacturers Association
Provided by IHS under license with NEMA
No reproduction or networking permitted without license from IHS

Not for Resale

Table 3-1

GENERAL-USE AC-ONLY SNAP SWITCH RATINGS IN AMPERES CORRESPONDING TO ALTERNATING-CURRENT VOLTAGES

15 amperes at 120 volts ac	
20 amperes at 120 volts ac	
30 amperes at 120 volts ac	
15 amperes at 120-277 volts ac	
20 amperes at 120-277 volts ac	
30 amperes at 120-277 volts ac	
20 amperes at 120 volts ac;	15 amperes at 277 volts ac
30 amperes at 120 volts ac;	15 amperes at 277 volts ac
30 amperes at 120 volts ac;	20 amperes at 277 volts ac

Authorized Engineering Information 3-11-83.

3.10 ALTERNATING CURRENT GENERAL-USE SNAP SWITCHES

Alternating current general-use snap switches have a marked current and voltage rating in accordance with Table 3-1.

Ac-only general-use snap switches are tested for the control of resistive inductive (including electric discharge lamp) and tungsten-filament loads at 120 volts up to the full current ratings of the switch and for motor loads up to 80 percent of the ampere rating of the switch but not exceeding 2 horsepower.

For more information, see Article 380 of the *National Electrical Code*.

Copyright National Electrical Manufacturers Association
Provided by IHS under license with NEMA
No reproduction or networking permitted without license from IHS
Not for Resale

This page is left blank intentionally.

Copyright National Electrical Manufacturers Association
Provided by IHS under license with NEMA
No reproduction or networking permitted without license from IHS

Not for Resale

Section 4
GENERAL-DUTY AND HEAVY-DUTY GENERAL-USE SNAP SWITCHES

4.1 GENERAL-DUTY GENERAL-USE SNAP SWITCHES

General-duty general-use snap switches with integral enclosures (see Section 8) or without integral enclosures, shall meet the applicable requirements for general-use switches given in Underwriters Laboratories, Inc. Standard for *General-Use Snap Switches,* ANSI/UL 20.

NEMA Standard 3-11-1983.

4.2 HEAVY-DUTY GENERAL-USE SNAP SWITCHES

Heavy-duty general-use snap switches shall meet the applicable requirements for general-use switches given in Underwriters Laboratories, Inc. Standard for *General-Use Snap Switches,* ANSI/UL 20, and of paragraphs 4.3 through 4.6 below.

NEMA Standard 3-11-1983.

Heavy-duty general-use snap switches are intended for use in commercial, industrial and institutional buildings where increased mechanical and electrical life beyond that normally obtained with general-duty general-use switches is desired.

Authorized Engineering Information 3-11-1983.

4.3 WIRING TERMINALS

Wiring terminals shall accommodate wires of the following sizes:

Ampere Rating	Wire Size, AWG
15 or less	12 and 14
20 and 30	10 and 12

NEMA Standard 3-11-1983.

4.4 MECHANICAL STRENGTH TEST—ALTERNATING-CURRENT AND DIRECT-CURRENT SWITCHES

A representative sample shall be mounted in a single-gang switch box, with a molded plastic flush plate installed. A force of 30 pounds shall be applied for 1 minute against the handle or actuator, in all operating positions of the switch, by means of a plane surface 3 inches (76.2mm) square. The force shall be applied in a direction perpendicular to the plane of the mounting surface, i.e., the plane surface shall be parallel to the mounting surface. In the case of key-operated switches, the force shall be applied to the switch face with the key removed.

At the end of this test, the switch shall be operable, and the mounting means shall not be permanently deformed by more than 1/64 inch (0.4mm).

NEMA Standard 3-11-1983.

4.5 TESTS

4.5.1 Samples

Six samples of each switch shall be subjected to the following tests in the order in which the tests are given, except that for the endurance test, three samples shall be subjected to Test #1 and three samples to Test #2.

4.5.2 Test Equipment and Procedures

The test equipment and test procedures shall be in accordance with the Underwriters Laboratories, Inc. Standard for *General-Use Snap Switches,* ANSI/UL 20.

4.5.3 Overload Test

4.5.3.1 Alternating-current/Direct-current Snap Switches

Snap switches shall be operated manually for 50 cycles at a rate of 6 to 10 cycles per minute and shall make and break 200 percent of rated current at maximum rated voltage. This test shall be made with direct current and with a noninductive load.

4.5.3.2 Alternating-current Snap Switches

See Underwriters Laboratories, Inc. Standard for *General-Use Snap Switches,* ANSI/UL 20.

4.5.4 Endurance Test #1—Alternating-current and Direct-current Snap Switches

4.5.4.1

Alternating-current and direct-current switches shall be operated on 125 volts direct current for 35 000 cycles, at a rate of 6 to 10 cycles per minute, with a load of tungsten-filament lamps so adjusted that the normal current slow is the rated current of the switch.

Copyright National Electrical Manufacturers Association
Provided by IHS under license with NEMA
No reproduction or networking permitted without license from IHS
Not for Resale

4.5.4.2

Alternating-current Snap Switches shall be operated on 120 volts alternating current for 50 000 cycles, at a rate of 6 to 10 cycles per minute, with a load of tungsten-filament lamps so adjusted that the normal current flow is the rated current of the switch.

4.5.5 Endurance Test #2—Alternating-current and Direct-current Snap Switches

4.5.5.1

Alternating-current and direct-current snap switches shall be operated on 120 volts alternating current for 35 000 cycles, at a rate of 6 to 10 cycles per minute, at 50 percent of rated current and at 75 to 80 percent power factor.

4.5.5.2

Alternating-current snap switches shall be operated at their maximum voltage rating for 50 000 cycles, at a rate of 6 to 10 cycles per minute, at 100 percent of rated current and at 75 to 80 percent power factor.

NEMA Standard 3-11-1983.

Section 5
SEMICONDUCTOR DIMMERS FOR INCANDESCENT LAMPS

Devices covered in this section are only for the control of incandescent lamploads. Dimmers should comply with the requirements of Underwriters Laboratories, Inc. Standard for *General-Use Snap Switches,* ANSI/UL 20, and the requirements of this section.

Authorized Engineering Information 3-11-1983.

5.1 TYPES OF DIMMERS

Dimmers shall be of one of the following types:

Type I —A Type I dimmer is so constructed that the on-off function is independent of the brightness setting.

Type II —A Type II dimmer is so constructed that the on-off function can be operated only at the minimum brightness setting.

Type III—A Type III dimmer has either a Type I or Type II construction, with the addition of a second gap switch which bypasses the semiconductor portion of the dimmer. These dimmers shall be designated as Type III-I or Type III-II.

NEMA Standard 3-11-1983.

5.2 ELECTROMAGNETIC INTERFERENCE (EMI) SUPPRESSION TEST

5.2.1 Test Sample

The test sample shall consist of three dimmers.

5.2.2 Test Voltage and Load

The test shall be made at the rated voltage of the dimmer, with the dimmer connected to its maximum rated tungsten-filament lamp load.

5.2.3 Test Setup

5.2.3.1 Basic Setup

The test setup for measuring conducted EMI shall be shown in Figure 5-1.

The reel-test fixture and line impedance stabilization network (LISN) shall be in accordance with American National Standard C63.4. The ground plane shall be of 0.025-inch (0.64 mm) solid copper and large enough to cover all the area directly below the test setup with exception of the radio noise meter which is connected to the LISN's by a 6-foot (1.83 m) coaxial cable.

5.2.3.2 Application of Basic Setup

Figure 5-2 shows several possible configurations that can be used with the basic test shown in Figure 5-1. They are as follows:

Figure 5-2A—Wall dimmer, flush or surface mounted.

Figure 5-2B—Dimmer with power cord and series plug for load (e.g., table top dimmer).

Figure 5-2C—Dimmer with power cord and built-in receptacle for load.

Figure 5-2D—Integral load dimmer (e.g., socket dimmer).

Authorized Engineering Information 3-11-1983.

Copyright National Electrical Manufacturers Association
Provided by IHS under license with NEMA
No reproduction or networking permitted without license from IHS
Not for Resale

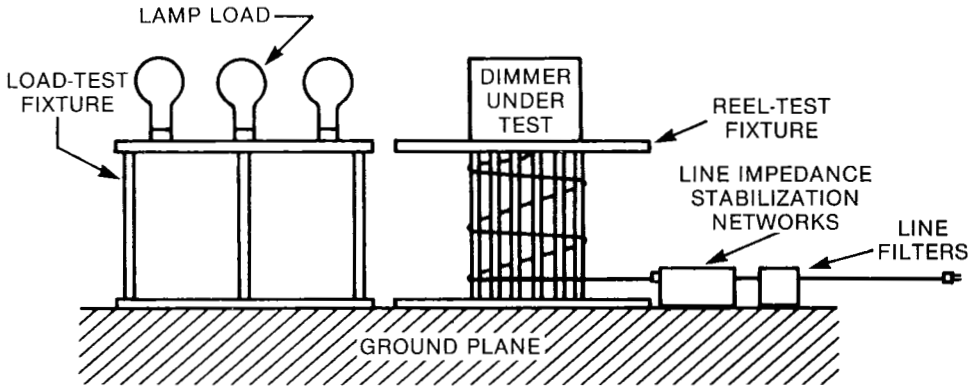

SIDE VIEW

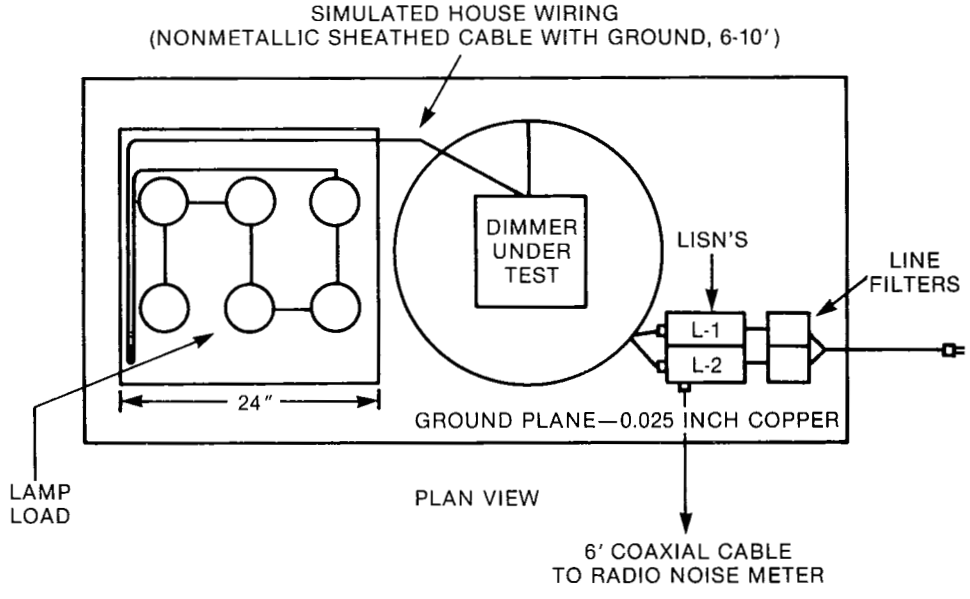

PLAN VIEW

Figure 5-1
BASIC TEST SETUP—CONDUCTED RADIO NOISE MEASUREMENTS

Copyright National Electrical Manufacturers Association
Provided by IHS under license with NEMA
No reproduction or networking permitted without license from IHS
Not for Resale

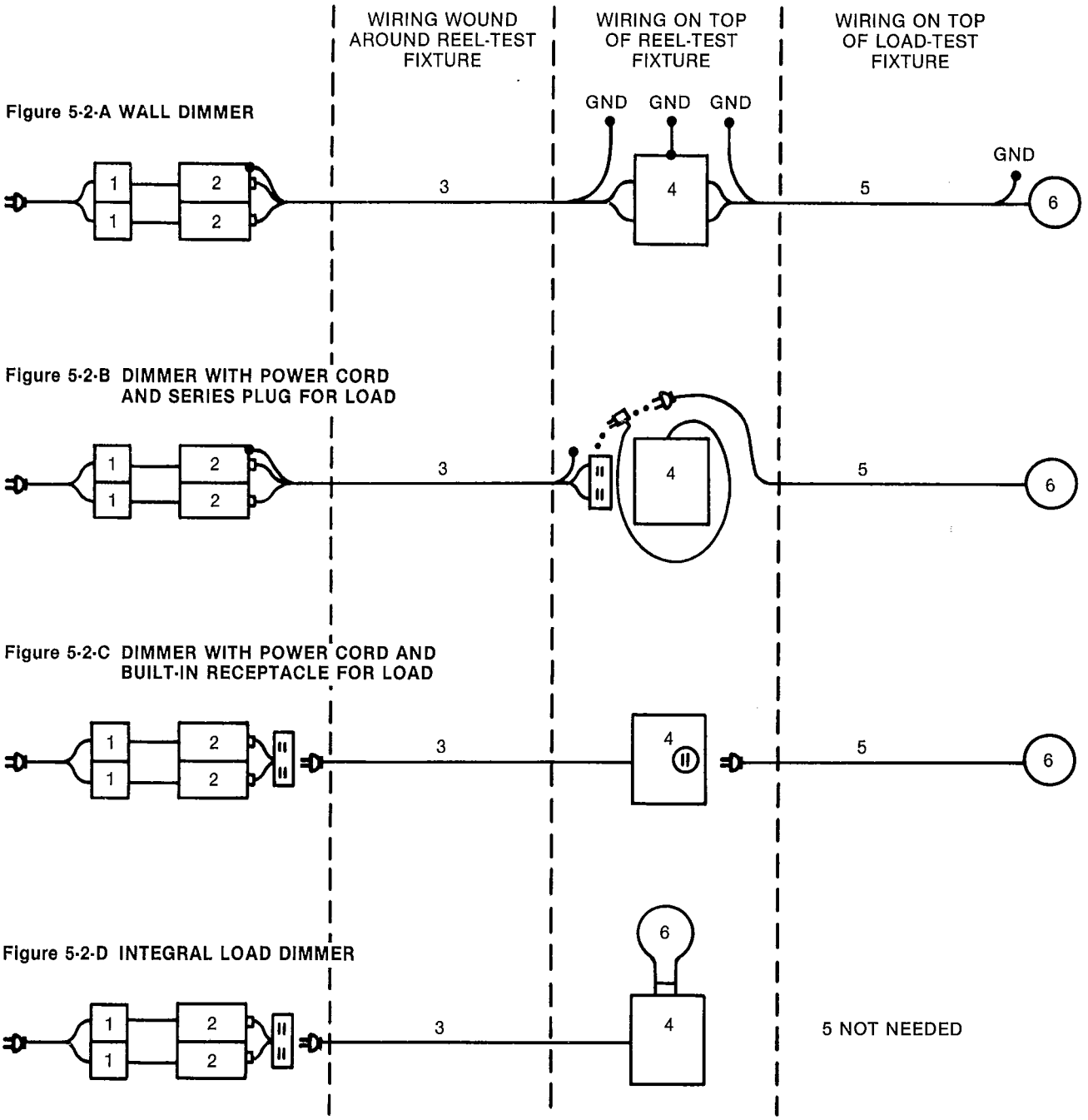

Figure 5-2-A WALL DIMMER

Figure 5-2-B DIMMER WITH POWER CORD AND SERIES PLUG FOR LOAD

Figure 5-2-C DIMMER WITH POWER CORD AND BUILT-IN RECEPTACLE FOR LOAD

Figure 5-2-D INTEGRAL LOAD DIMMER

5 NOT NEEDED

NOTES—

1. Filter to reduce ambient line noise to 100 microvolts.
2. Line impedance stabilization network (LISN).
3. 6′ nonmetallic sheathed cable with ground or lamp cord.
4. Dimmer under test.
5. 6′ - 10′ nonmetallic sheathed cable with ground or lamp cord.
6. Rated dimmer lamp load.

Figure 5-2-A Through Figure 5-2-D
APPLICATIONS OF BASIC SETUP

Copyright National Electrical Manufacturers Association
Provided by IHS under license with NEMA
No reproduction or networking permitted without license from IHS
Not for Resale

5.3.4 Measurements

5.3.4.1 Method of Measurement

Measurements shall be made in accordance with the general requirements of American National Standard *Methods of Measurement Emissions from Low-Voltage Electrical and Electronics Equipments in the Range of 10 KHz to GHz*, C 63.4, using a meter which meets the requirements of American National Standard *Specifications for Electromagnetic Noise and Field-Strength Instrumentation 10 kHz to GHz*, C 63.2.

5.3.4.2 Detector Function

All measurements shall be made using the quasi-peak detector function (1 millisecond charge/600 millisecond discharge).

5.3.4.3 Preliminary Measurements

The following preliminary measurements shall be made, before taking readings, to determine the set-up which yields the maximum amount of noise:

5.3.4.3.1 Measurement Frequency:

500 kilohertz.

5.3.4.3.2 Control Setting:

Adjust the dimmer control for the setting which yields the maximum amount of noise. Mark this control position and use it throughout the remainder of the test.

5.3.4.3.3 Measurement Point:

Both sides of the alternating-current line, L-1 and L-2 (see Figure 5-1).

5.3.4.3.4 Grounding:

Measurements shall be made with the exposed dead metal parts of the dimmer grounded and then ungrounded.

5.3.4.4 Final Measurement

Using the setup which yielded the maximum of noise during the preliminary measurements (see par.5.3.4.3), measure the noise level at each of the following frequencies, and record the readings from both sides of the alternating-current line, L-1 and L-2:

500 kilohertz
600 "
800 "
1000 "
1200 "
1500 "
2000 "

The total frequency range of 500 through 2000 kilohertz should be scanned while monitoring with the noise level meter to detect the possible occurrence of peaks at other than the foregoing discrete measurement frequencies; these peaks should be recorded. (This sentence is proposed as Authorized Engineering Information.)

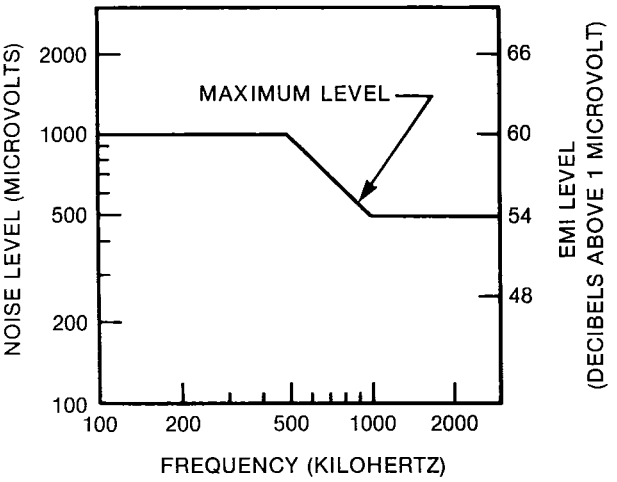

Figure 5-3
MAXIMUM CONDUCTED EMI VERSUS FREQUENCY

5.3.5 Maximum EMI Level

The maximum EMI level of any test sample shall not exceed the value indicated by the curve shown in Figure 5-3.

NEMA Standard 3-11-1983.

Copyright National Electrical Manufacturers Association
Provided by IHS under license with NEMA
No reproduction or networking permitted without license from IHS
Not for Resale

This page is left blank intentionally.

Copyright National Electrical Manufacturers Association
Provided by IHS under license with NEMA
No reproduction or networking permitted without license from IHS

Not for Resale

Section 6
RECEPTACLES AND ATTACHMENT PLUGS—TERMINAL IDENTIFICATION

6.1 GROUNDED TERMINALS

That terminal which is intended for the field connection of a grounded circuit conductor and which is indicated by the latter "W" in the configurations shown in NEMA Standards Publication WD 6, *Dimensional Requirements for Wiring Devices*, shall be, when visible, identified by a metallic coating which is substantially white in color. The coating shall be applied as follows:

1. Both terminal plate and screw, or
2. Terminal plate only, if all terminal screws except "G" are substantially the same color, or
3. Screw only, if captive and if all terminal plates are substantially the same color except that the "G" terminal plate may be a different color.

Where the terminal or the screw, or both, are not visible, the word "White" or a "White Marking" shall be shown adjacent to that terminal.

NEMA Standard 3-11-1983.

6.2 GROUNDING TERMINALS

That terminal which is indicated by the letter "G" as shown in NEMA Standards Publication No. WD 6 shall have:

1. A terminal screw which is not easily removable and which has a slotted hexagonal, green-colored head, or
2. A hexagonal green-colored nut which is not readily removable from the terminal stud, or
3. A visible pressure wire connector which has a green-colored body.

NEMA Standard 3-11-1983.

6.3 OTHER TERMINALS

Other terminals need not be identified but, if they are identified, the letters "X," "Y," and "Z," shall be used in the combinations shown for the particular configuration involved and shall be located as follows:

1. Looking at the blade end of the plug and proceeding counterclockwise starting from the grounding blade (G) or, in the absence of a grounding blade (G), the grounded blade (W), the terminals shall be marked "X", or "X" and "Y"; or "X", "Y," and "Z" as appropriate for the total number of terminals involved.
2. Looking at the face end of the mating receptacle and proceeding clockwise, starting from the grounding slot: (G) or, in the absence of a grounding slot (G), the grounded slot (W), the terminals shall be marked "X," "X" and "Y"; or "X," "Y," and "Z" as appropriate for the total number of terminals involved.

NEMA Standard 3-11-1983.

Copyright National Electrical Manufacturers Association
Provided by IHS under license with NEMA
No reproduction or networking permitted without license from IHS
Not for Resale

Section 7
GENERAL-DUTY AND HEAVY-DUTY GENERAL-USE 15-AND 20-AMPERE PLUGS, RECEPTACLES, AND CORD CONNECTORS

7.1 GENERAL-DUTY GENERAL-USE PLUGS, RECEPTACLES, AND CORD CONNECTORS

General-duty general-use 15- and 20-ampere receptacles, with intergral enclosures (see Section 8) and without integral enclosures, plugs, and cord connectors shall meet the requirements given in Underwriters Laboratories, Inc. Standard for *Attachment Plugs and Receptacles,* ANSI/UL 498.

NEMA Standard 3-11-1983.

7.2 HEAVY-DUTY GENERAL-USE PLUGS, RECEPTACLES, AND CORD CONNECTORS

Heavy-duty general-use 15- and 20-ampere, 125 and 250 volt plugs, receptacles and cord connectors shall meet the requirements given in Underwriters Laboratories Inc. Standard for *Attachment Plugs and Receptacles,* ANSI/UL 498, and 7.3 through 7.11.

Three plugs, three receptacles and three cord connectors shall be subjected to the applicable tests described in 7.3 through 7.10 in the order in which they are presented. Six plugs and six cord connectors shall be tested in accordance with 7.11.

Test criteria for 7.3 through 7.10 shall be, when applicable, in accordance with Underwriters Laboratories, Inc. Standard for *Attachment Plugs and Receptacles,* ANSI/UL 498.

NEMA Standard 3-11-1983.

Heavy-duty general-use plugs, receptacles, and cord connectors are intended for use in commercial, industrial and institutional buildings where increased mechanical and electrical life beyond that normally obtained with general-duty plugs, receptacles, and cord connectors is desired.

Authorized Engineering Information 3-11-1983.

7.3 TEST FOR RETENTION OF PLUGS, RECEPTACLES, AND CORD CONNECTORS

7.3.1 Power Contacts

The conditioning tool shall consist of a plug with a single hardened steel blade without holes (see Figure 7-1). The blade shall be fully inserted into each current-carrying contact of the device being tested for 20 conditioning cycles. After conditioning, the contact of the device being tested shall be capable of supporting for 1 minute 1½ pounds secured to a single hardened steel blade without holes (see Figure 7-2). The force shall be in a direction normal to the plane of the face of the device and tending to withdraw the blade most easily from the device under test.

7.3.2 Grounding Contact

The grounding contact shall be conditioned by 20 insertions of a hardened steel pin with a spherical end (see Figure 7-3). After conditioning, the contact shall be capable of supporting, for 1 minute, 4 ounces secured to a hardened steel pin having a spherical end (see Figure 7-4). The force shall be in a direction normal to the plane of the face of the device and tending to withdraw the blade most easily from the device under test.

NEMA Standard 3-11-1983.

7.4 OVERLOAD TEST (RECEPTACLES AND CORD CONNECTORS)

The device shall be tested for 250 cycles at a rate of 6 to 10 cycles per minute and at 200 percent of rated current at the rated voltage. Direct current and a resistance load shall be used unless the device is rated and marked for use on alternating current only, in which case the device shall be tested with alternating current and an inductive load having a power factor of 0.75–0.80.

The algebraic sum of the test voltage variation (expressed as a percentage of the rated voltage) and the test current variation (expressed as a percentage of the rated current) shall not exceed 5 percent.

The plug used for testing shall be listed and shall be in compliance with the requirements of ANSI/UL 498 and have solid brass blades.

An untested plug shall be used to start the test on any device.

All plug insertions and withdrawals shall be manual or mechanical, at the option of the manufacturer.

Failure during this test shall be indicated by rupturing of the ground fuse, burning or welding, or both, of the device contacts so that further plug insertions become unreasonable. Simple "roughing-up" of the blade or contact is not a failure even though an untested plug may be required to be used to complete the test on any device.

Copyright National Electrical Manufacturers Association
Provided by IHS under license with NEMA
No reproduction or networking permitted without license from IHS

Not for Resale

A further indication of failure will be a shorting between opposite polarities of the receptacles during this test.

NEMA Standard 3-11-1983.

7.5 TEMPERATURE TEST (RECEPTACLES AND CORD CONNECTORS)

The temperature test shall be made using a #12 AWG Type R, T or TW wire (copper conductor). The receptacle or connector leads shall be at least 6 inches (152.4mm) long and as short as possible on the plug. The plug blades shall be 0.057/0.055 inch (1.5/1.4mm) thick solid brass. Both 15- and 20-ampere receptacles and cord connectors shall be tested at 20 amperes. The temperature rise at the terminals, measured by means of thermocouples, shall be not more than 30°C (54°F) after the temperature has remained constant for three consecutive readings taken at 5-minute intervals.

At the end of this test, the retention of plugs by power contacts shall be retested in accordance with 7.3.1, omitting the 20 conditioning cycles.

NEMA Standard 3-11-1983.

7.6 ASSEMBLY SECURITY

7.6.1 Test No. 1

The receptacle shall be mounted in the fixture described in Figure 7-5 and a force of 100 pounds shall be applied as shown in Figure 7-6 by means of a pushout tool required for 15-ampere 125 volt and 20-ampere 125 volt devices shall be shown in Figure 7-7. Other devices will require the same design modified to fit the slots.

Any mechanical breakage of the device that exposes live parts or separation of the face and body by more than ⅛ inch (1.6mm) constitutes failure.

7.6.2 Test No. 2

With the same receptacle as used for Test No. 1 mounted in the fixture described in Figure 7-5, a force of 50 pounds shall be applied as shown in Figure 7-8 to the bridge described in Figure 7-9. When the load is removed, there shall be neither cracking of the base nor permanent deformation of the yoke exceeding ⅛ inch (1.6mm) when measured as shown in Figure 7-8.

NEMA Standard 3-11-1983.

7.7 SCREW TERMINALS (PLUGS, RECEPTACLES, AND CORD CONNECTORS)

Terminals shall accommodate wires of at least the following sizes:

Ampere Rating	Wire Size, AWG
15	12 and 14
20	10 and 12

NEMA Standard 3-11-1983.

7.8 TERMINAL STRENGTH TEST (RECEPTACLES ONLY)

A solid copper wire not less than 12 AWG shall be connected to each terminal as it would be in normal use. The binding screw shall be tightened with a torque screw driver or the equivalent until the torque of 14 inch-pounds (1.6Nm) is reached. The binding screw shall then be loosened, and the test repeated five times. The screw shall not strip, the receptacle terminal shall not distort, nor shall the body break so as to render the device unusable.

NEMA Standard 3-11-1983.

7.9 DIELECTRIC STRENGTH TEST (PLUGS, RECEPTACLES, AND CORD CONNECTORS)

Each device shall be capable of withstanding for 1 minute a dielectric test voltage of 1000 volts plus twice the rated voltage of the device. There shall be no damage, arcing, or breakdown.

The test voltage shall be a 60-hertz alternating-current voltage and shall be applied at a rate not exceeding 500 volts per second, starting from zero. The voltage shall be applied between the metal parts of opposite polarity and between current carrying metal parts and exposed dead metal parts.

NEMA Standard 3-11-1983.

7.10 INSULATION RESISTANCE TEST (PLUGS, RECEPTACLES, AND CORD CONNECTORS

When measured at 500 volts direct current, the resistance between current carrying metal parts of opposite polarity and between current carrying metal parts and exposed dead metal parts shall be at least 50 megohms.

NEMA Standard 3-11-1983.

Copyright National Electrical Manufacturers Association
Provided by IHS under license with NEMA
No reproduction or networking permitted without license from IHS
Not for Resale

7.11 MECHANICAL SHOCK TEST (PLUGS AND CORD CONNECTORS)

Six samples of the device shall be assembled to ¼ inch (6.4mm) diameter braided nylon cord of a length which will permit mounting the device on the test machine illustrated in Figure 7-10.

The device shall be supported at Point A so that, when hanging freely, the plug takes Position (1). A moving member of the machine shall lift the cord and plug assembly to Position (2) and then release it so that it falls freely and strikes the impact board at Point B. This constitutes one cycle of the test.

Each sample shall be subjected to this test for 1300 cycles or until there is evidence of chipping, cracking, breaking, or loosening of parts which will interfere with the safe and normal usage of the device. The device shall then be tested for dielectric strength in accordance with 7.9.

The lot of six samples shall be considered to have passed the test if each sample completes not less than 500 cycles and the average number of cycles completed for all devices tested is not less than 1000.

NEMA Standard 3-11-1983.

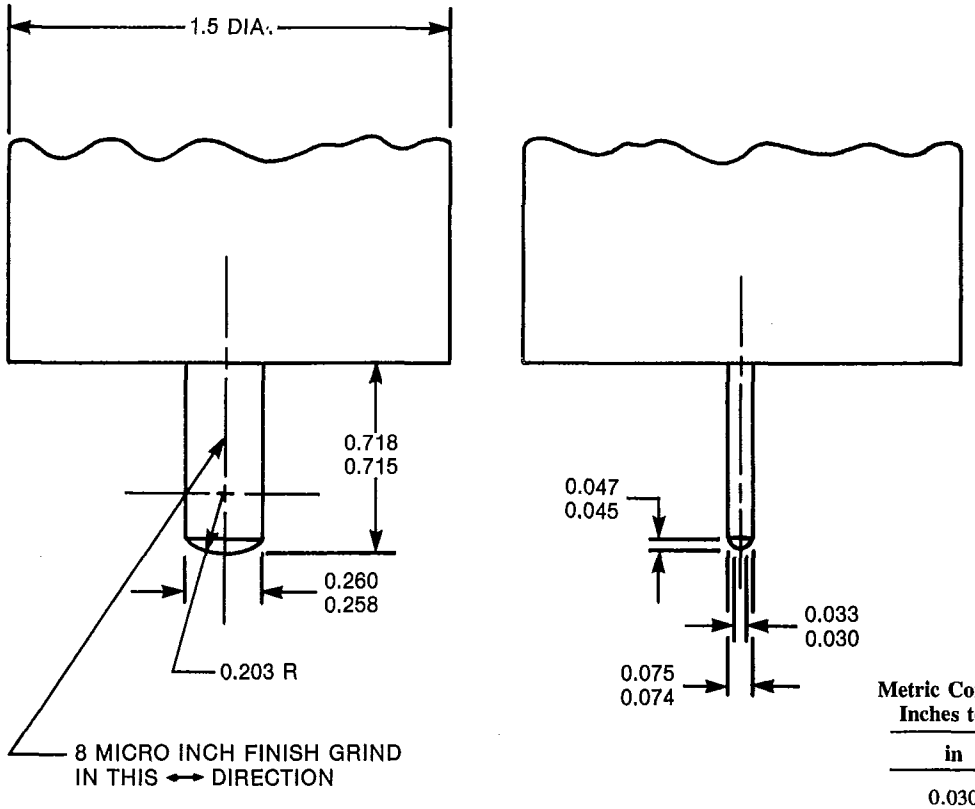

Metric Conversion Table, Inches to Millimeters

in	mm
0.030	.76
0.033	.84
0.045	1.14
0.047	1.19
0.074	1.88
0.075	1.91
0.203	5.16
0.258	6.55
0.260	6.60
0.715	18.16
0.718	18.24
1.500	38.10

MATERIAL—The blade shall be of steel having a Rockwell Hardness of C-58 to 60. The handle shall be of cold rolled steel.

NOTE 1—The blade shall be fastened to the handle in a rigid manner.
NOTE 2—Sharp edges shall be removed to a maximum radius of 0.015 inch.

Figure 7-1
CONDITIONING TOOL

Copyright National Electrical Manufacturers Association
Provided by IHS under license with NEMA
No reproduction or networking permitted without license from IHS
Not for Resale

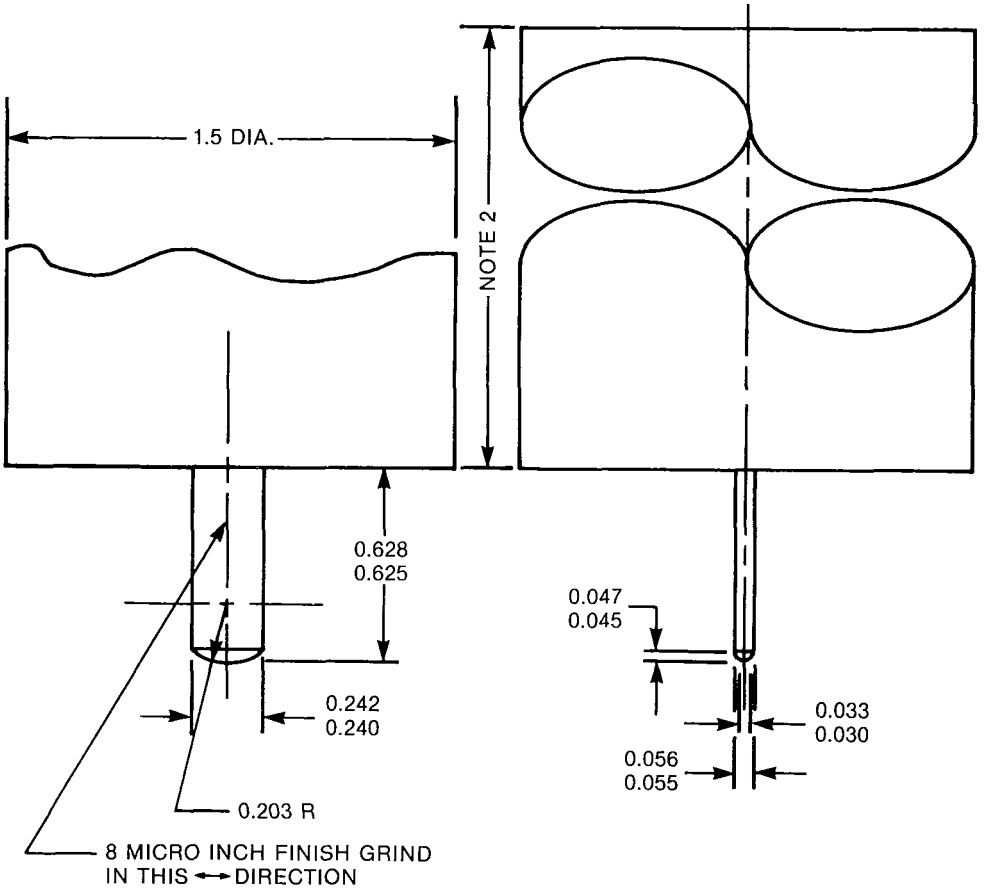

MATERIAL—The blade shall be of steel having a Rockwell Hardness of C-58 to 60. The handle shall be of cold rolled steel.

NOTE 1—The axis of the blade and the axis of the holder shall have a combined concentricity and axial alignment tolerance of 0.006 inch maximum.
NOTE 2—The length shall suit a total tool weight of 1.50 pounds.
NOTE 3—The blade shall be fastened to the handle in a rigid manner.
NOTE 4—Sharp edges shall be removed to a maximum radius of 0.015 inch.

Figure 7-2
PULLOUT TOOL

Metric Conversion Table, Inches to Millimeters

in	mm
0.030	.76
0.033	.84
0.045	1.14
0.047	1.19
0.055	1.40
0.056	1.42
0.203	5.16
0.240	6.10
0.242	6.15
0.625	15.88
0.628	15.95
1.500	38.10

Copyright National Electrical Manufacturers Association
Provided by IHS under license with NEMA
No reproduction or networking permitted without license from IHS

Not for Resale

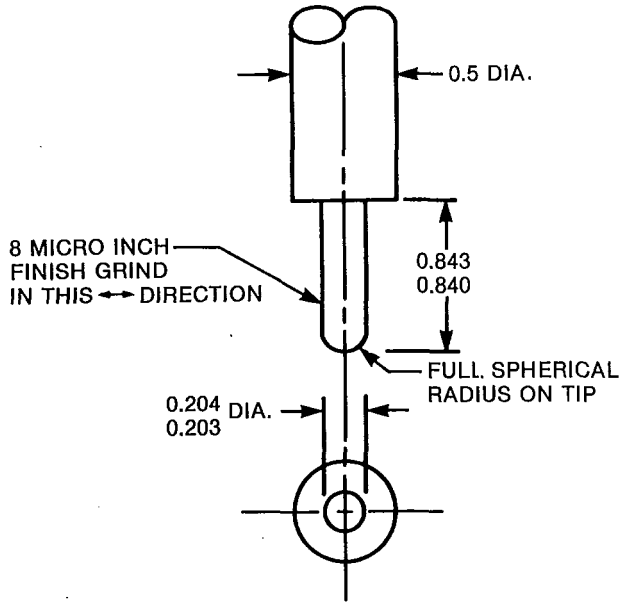

MATERIAL—The pin shall be of steel having a Rockwell Hardness of C-58 to 60. The handle shall be of cold rolled steel.

NOTE—The ground pin shall be fastened to the 0.5-inch-diameter handle in a rigid manner.

Figure 7-3
CONDITIONING TOOL

Metric Conversion Table, Inches to Millimeters

in	mm
0.203	5.16
0.204	5.18
0.500	12.70
0.840	21.34
0.843	21.41

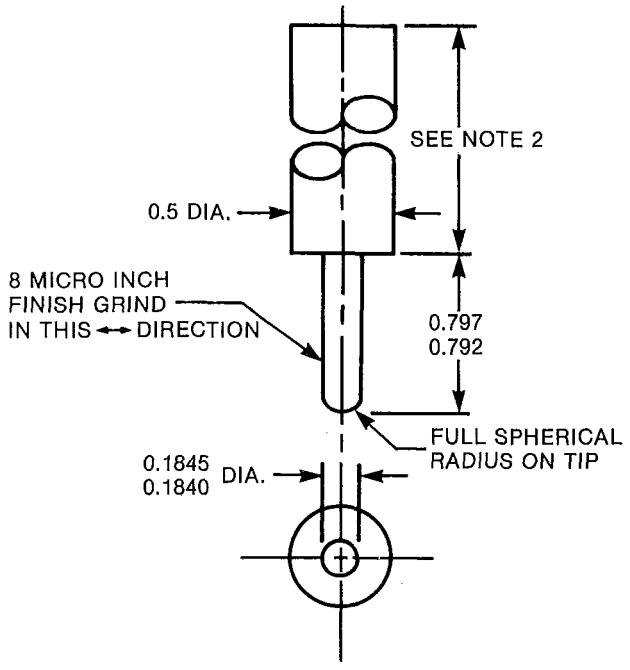

MATERIAL—The pin shall be of steel having a Rockwell Hardness of C-58 to 60. The handle shall be of cold rolled steel.

NOTE 1—The ground pin shall be fastened to the 0.5-inch-diameter handle in a rigid manner.
NOTE 2—The length shall suit a total tool weight of 4.0 ounces.
NOTE 3—The axis of the blade and the axis of the handle shall have a combined concentricity and axial alignment of 0.006 inch maximum, measured at the tip of the pin.

Figure 7-4
PULLOUT TOOL

Metric Conversion Table, Inches to Millimeters

in	mm
0.1840	4.67
0.1845	4.68
0.500	12.70
0.792	20.12
0.797	20.24

Copyright National Electrical Manufacturers Association
Provided by IHS under license with NEMA
No reproduction or networking permitted without license from IHS
Not for Resale

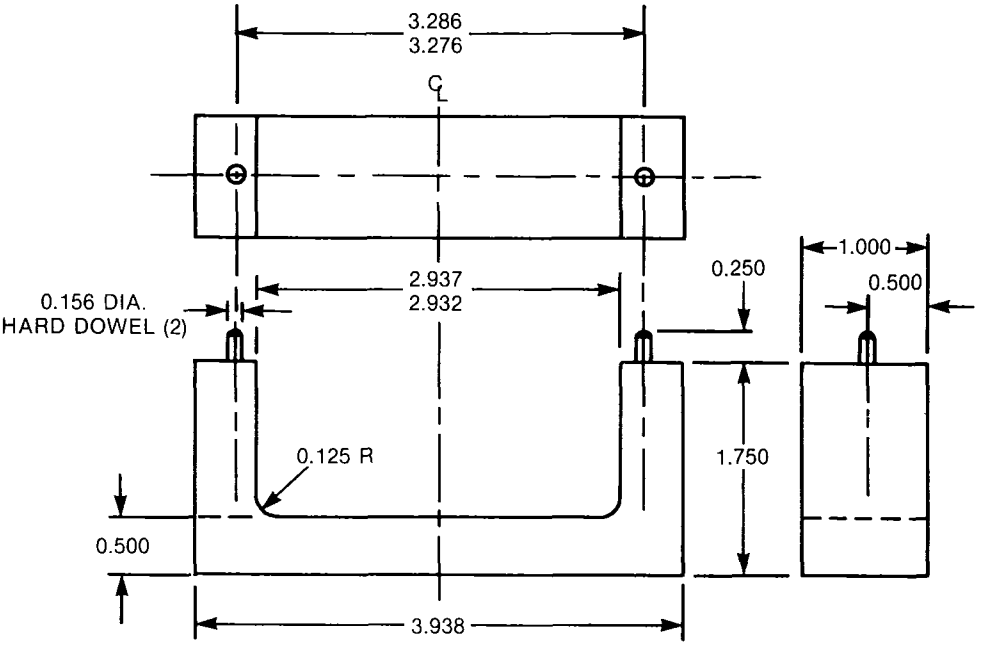

MATERIAL—The fixture shall be of cold rolled steel.

NOTE—Unless otherwise specified, the tolerance on dimensions shall be as follows: decimals—±0.005 inch
fractions—±0.010 inch
angles—±1 degree

Figure 7-5
FIXTURE FOR SECURITY TEST #1

Metric Conversion Table, Inches to Millimeters

in	mm
0.125	3.18
0.156	3.96
0.250	6.35
0.500	12.70
1.000	25.40
1.750	44.45
2.932	74.47
2.937	74.60
3.276	83.21
3.286	83.46
3.938	100.03

Copyright National Electrical Manufacturers Association
Provided by IHS under license with NEMA
No reproduction or networking permitted without license from IHS
Not for Resale

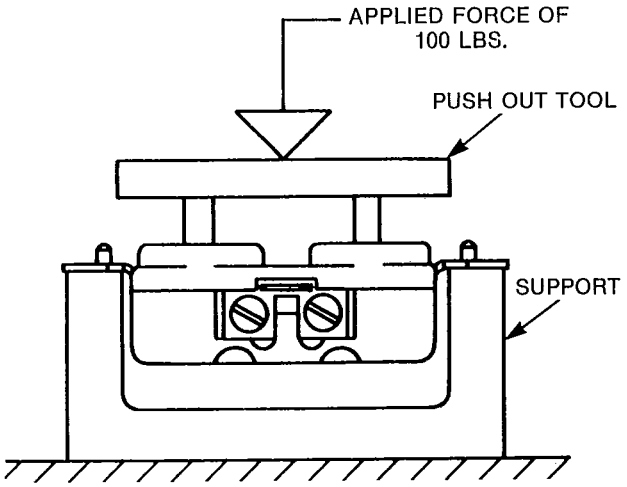

Figure 7-6
APPLICATION OF 100-POUND FORCE
SECURITY TEST #1

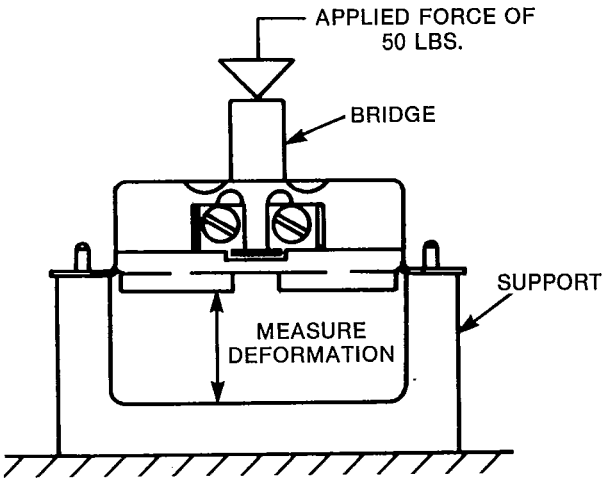

Figure 7-8
APPLICATION OF 50-POUND FORCE
SECURITY TEST #2

Copyright National Electrical Manufacturers Association
Provided by IHS under license with NEMA
No reproduction or networking permitted without license from IHS
Not for Resale

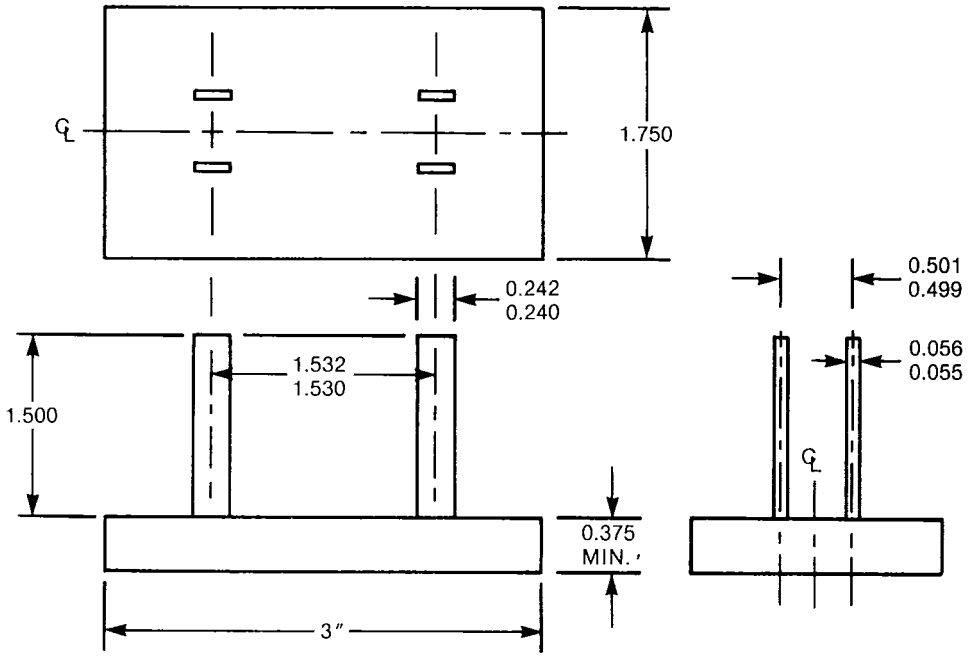

MATERIAL—Blades shall be of steel having a Rockwell Hardness of C-58 to 60. The base shall be of cold rolled steel.

NOTE 1—Blades shall be parallel to each other and perpendicular to the base within 0.006 inch.
NOTE 2—Blades shall be fastened to the base in a rigid manner.
NOTE 3—Sharp edges shall be removed to a maximum radius of 0.015 inch.
NOTE 4—Unless otherwise specified, the tolerance on dimensions shall be as follows: decimals—±0.005 inch
fractions—±0.010 inch
angles—±1 degree

Figure 7-7
PUSHOUT TOOL

Metric Conversion Table, Inches to Millimeters

in	mm
0.055	1.40
0.056	1.42
0.240	6.10
0.242	6.15
0.375	9.52
0.499	12.67
0.501	12.73
1.500	38.10
1.530	38.86
1.532	38.91
1.750	44.45
3.000	76.20

Copyright National Electrical Manufacturers Association
Provided by IHS under license with NEMA
No reproduction or networking permitted without license from IHS
Not for Resale

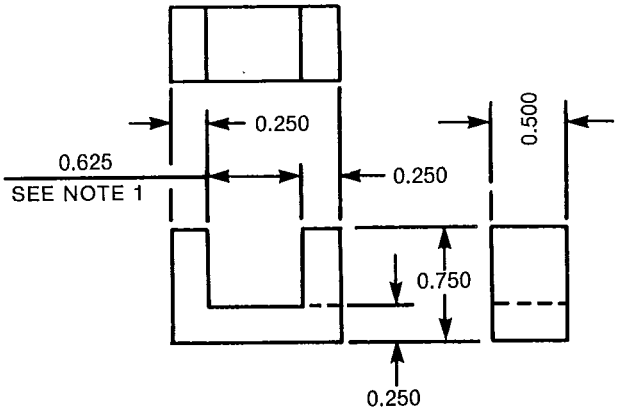

NOTE 1—The 0.625 dimension may be varied so that the tool clears the strap of the receptacle.
NOTE 2—The shape of the bridge may be varied to suit the back of the device being tested.
NOTE 3—Unless otherwise specified, the tolerance on dimensions shall be as follows: decimals—±0.005 inch
fractions—±0.010 inch

Figure 7-9
BRIDGE FOR SECURITY TEST

Metric Conversion Table, Inches to Millimeters

in	mm
0.250	6.35
0.500	12.70
0.625	15.88
0.750	19.05

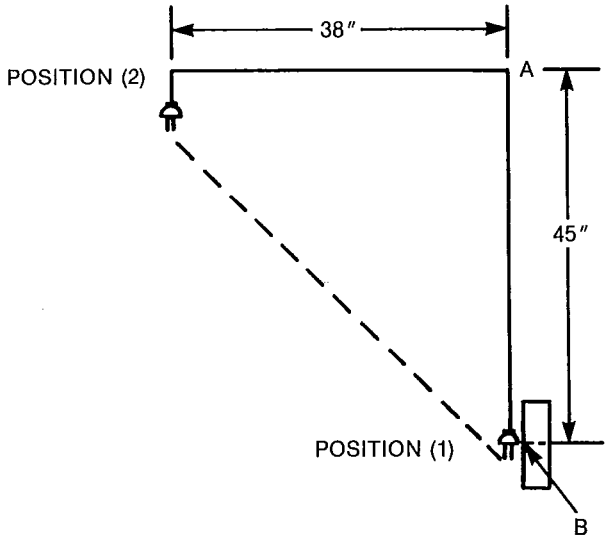

NOTE 1—The impact board shall be of wood, such as hard maple, mounted rigidly with the grain of the wood running vertically. The board shall be from 1½ to 2 inches thick and of sufficient width and length and so located that, when the device is allowed to fall, it will not strike near any edge of the board.
NOTE 2—The screws may be tightened after each 200 cycles.

Figure 7-10
MECHANICAL SHOCK TEST

Metric Conversion Table, Inches to Millimeters

in	mm
38	965
45	1143

Copyright National Electrical Manufacturers Association
Provided by IHS under license with NEMA
No reproduction or networking permitted without license from IHS
Not for Resale

Section 8
WIRING DEVICES WITH INTEGRAL ENCLOSURES (SELF CONTAINED WIRING DEVICES)

8.1 GENERAL

Wiring devices with intergral enclosure (receptacles and switches rated 15- and 20-amperes, 125 and 250 volts, for flush mounting without a separate outlet box) shall be designed for use with nonmetallic sheathed cable having solid copper conductors in accordance with the *National Electrical Code*, NFPA 70.

NEMA Standard 3-11-1983.

8.2 CONSTRUCTION

8.2.1 General

The device shall fully enclose a cable that has been slit to a maximum length of 2.125 inches (54 mm) prior to its being spread.

8.2.2 Three-way Switches

Access to switched terminals of a 3-way switch shall be at one end of the device, and access to the common terminal shall be at the other end of the device.

8.2.3 Mounting

A device with integral enclosure intended for flush mounting installation shall provide for secure fastening of the device in walls and ceilings or to frame construction by the mounting means provided for use with the device. Provision for support or other mounting means shall be outside the enclosed interior of the insulating body of the device.

8.2.3.1 Mounting Means Not Permanently Affixed

Where the mounting means is not permanently affixed to the mounting surface or structure, the required surface opening for a single device shall not exceed 1.875 by 3.500 (47.6 × 88.9 mm).

8.2.3.2 Mounting Means Permanently Affixed

Where the mounting means is provided by components that are permanently affixed to the mounting surface or structure, the opening which remains when the device is removed for replacement shall permit the mounting of an old work box and shall not permit a conventional wiring device to be readily mounted to a permanently affixed mounting component. The opening in the permanently affixed mounting component, when used, shall conform to the requirements shown in Figure 8-1.

NEMA Standard 3-11-1983.

Copyright National Electrical Manufacturers Association
Provided by IHS under license with NEMA
No reproduction or networking permitted without license from IHS

Not for Resale

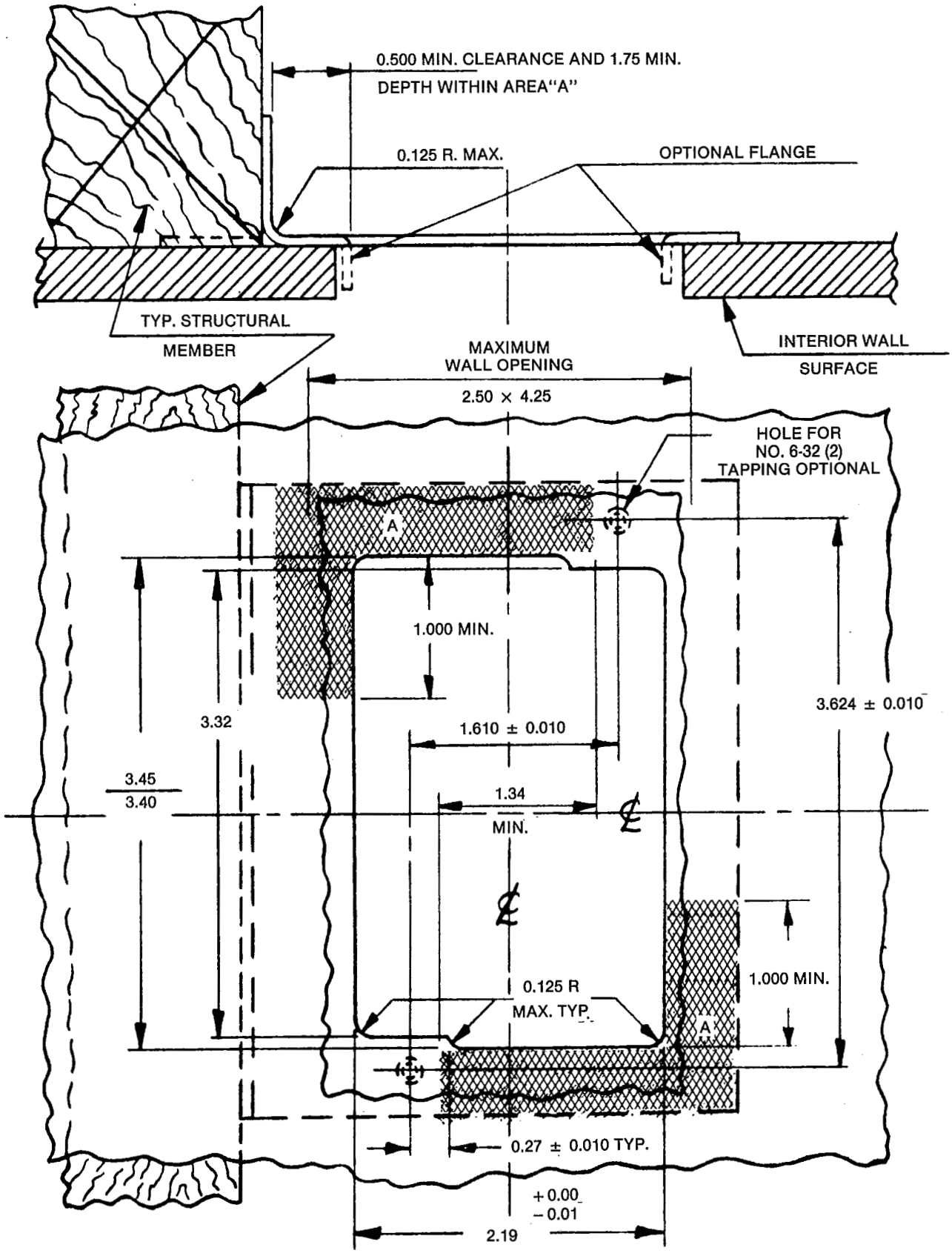

ALL DIMENSIONS SYMMETRICAL ABOUT THEIR CENTER LINE.
ALL DIMENSIONS IN INCHES.
FIGURE NOT TO SCALE.

Figure 8-1

Copyright National Electrical Manufacturers Association
Provided by IHS under license with NEMA
No reproduction or networking permitted without license from IHS
Not for Resale

NEMA STANDARDIZATION

The purpose of NEMA Standards, their classification and status, are set forth in certain clauses of the NEMA *Standardization Policies and Procedures* manual and are referenced below.

Purpose of Standards

National Electrical Manufacturers Association standards are adopted in the public interest and are designed to eliminate misunderstandings between the manufacturer and the purchaser and to assist purchasers in selecting and obtaining the proper product for their particular needs. Existence of a National Electrical Manufacturers Association standard does not in any respect preclude any member or nonmember from manufacturing or selling products not conforming to the standard. *(Standardization Policies and Procedures, p. 1)*

Definition of a Standard

A standard of the National Electrical Manufacturers Association defines a product, process, or procedure with reference to one or more of the following: nomenclature, composition, construction, dimensions, tolerances, safety, operating characteristics, performance, rating, testing, and the service for which they are designed.

(Standardization Policies and Procedures, p. 2)

Dimensions

Where dimensions are given for interchangeability purposes, alternate dimensions satisfying the other provisions of the Standards Publication may be capable of otherwise equivalent performance.

(Standardization Policies and Procedures, p.8)

Categories of Standards

National Electrical Manufacturers Association Standards are of two classes:

1. NEMA Standard, which relates to a product, process, or procedure commercially standardized and subject to repetitive manufacture, which standard has been approved by at least 90 percent of the members of the Subdivision eligible to vote thereon;
2. Suggested Standard for Future Design, which may not have been regularly applied to a commercial product, but which suggests a sound engineering approach to future development, which standard has been approved by at least two-thirds of the members of the Subdivision eligible to vote thereon.

(Standardization Policies and Procedures, pp. 7 & 16)

Authorized Engineering Information

Authorized Engineering Information consists of explanatory data and other engineering information of an informative character not falling within the classification of NEMA Standard or Suggested Standard for Future Design, which standard has been approved by at least two-thirds of the members of the Subdivision eligible to vote on the standard.

(Standardization Policies and Procedures, pp. 7 & 16)

Official Standards Proposal

An Official Standards Proposal is an official draft of a proposed standard which is formally recommended to an outside organization(s) for consideration, comment, and/or approval, and which has been approved by at least 90 percent of the members of the Subdivision eligible to vote thereon.

(Standardization Policies and Procedures, pp. 7 & 16)

Identification of Status

Standards in NEMA Standards Publications are identified in the foreword or following each standard as "NEMA Standard" or "Suggested Standard for Future Design." These indicate the status of the standard. These words are followed by a date which indicates when the standard was adopted in its present form by the Association.

The material identified as "Authorized Engineering Information" and "Official Standards Proposal" is designated similarly.

Copyright National Electrical Manufacturers Association
Provided by IHS under license with NEMA
No reproduction or networking permitted without license from IHS
Not for Resale

WIRING DEVICE SECTION
OF THE
NATIONAL ELECTRICAL MANUFACTURERS ASSOCIATION

MEMBER COMPANIES

American Electric
FL Industries Inc.
Pittsburgh, PA 15237-4161

AMP Incorporated
Harrisburg, PA 17105-3608

Bryant Electric
Westinghouse Electric Corporation
Milford, CT 06460-2465

Challenger Electrical Equipment Corp.
Malvern, PA 19355

Crouse-Hinds Elect. Constr. Materials
Division of Cooper Industries, Inc.
Syracuse, NY 13221

Daniel Woodhead Company
Sub. of Woodhead Industries, Inc.
Northbrook, IL 60062

Eagle Electric Mfg. Company, Inc.
Long Island City, NY 11101

Ericson Mfg. Company, Inc.
Willoughby, OH 44094

GE
Warwick, RI 02886

Hubbell Incorporated
Bridgeport, CT 06605

Kulka Wiring Devices
Mt. Vernon, NY 10550

Leviton Manufacturing Company, Inc.
Little Neck, NY 11362

Liberty Circle F, Inc.
Trenton, NJ 08609

Lutron Electronics Company, Inc.
Coopersburg, PA 18036

Marinco/Marine Industries Co.
Novato, CA 94949

McGill Manufacturing Company, Inc.
Valparaiso, IN 46383

Pass & Seymour/Legrand
Syracuse, NY 13221

SL Waber Inc.
Mt. Laurel, NJ 08054

Thomas & Betts Corporation
Bridgewater, NJ 08807-0993

USD Products
Bussman Division of Cooper Industries
Chicago, IL 60656

The Wiremold Company
West Hartford, CT 06110

Copyright National Electrical Manufacturers Association
Provided by IHS under license with NEMA
No reproduction or networking permitted without license from IHS
Not for Resale