**National Electrical Manufacturers Association**
2101 L Street, N.W. Suite 300
Washington, D.C. 20037 (202) 457-8400
Fax (202) 457-8411

**TO:** All holders of WC 58-1991

**FROM:** NEMA Communications Director

**RE:** Revision 1 to WC 58-1991

**DATE:** 10 March, 1994 1994

Enclosed please find replacement pages for pages that were revised in NEMA Standards Publication No. WC 58-1991. The old pages should be removed and replaced with the new pages with the date March 2, 1994, at the top, enclosed here. This will bring your copy of WC 58 up to date.

Copyright National Electrical Manufacturers Association
Provided by IHS under license with NEMA
No reproduction or networking permitted without license from IHS
Not for Resale

# NEMA Standards Publication No. WC 58-1991

*Portable and Power Feeder Cables for Use in Mines and Similar Applications*

REVISION 1, March 2, 1994

*Published by*

**National Electrical Manufacturers Association**
2101 L Street, N.W.
Washington, DC 20037

©1993 by National Electrical Manufacturers Association

Copyright National Electrical Manufacturers Association
Provided by IHS under license with NEMA
No reproduction or networking permitted without license from IHS

Not for Resale

## List of Revision Pages

Pages with a revision number of 0 are originals. They have not been revised. Pages with a revision number of 1 were altered in revision 1, March 2, 1994.

| Page Number | Revision Number | Page Number | Revision Number |
|---|---|---|---|
| Table of Contents | 1 | 36 | 0 |
| i | 0 | 37 | 0 |
| ii | 0 | 38 | 0 |
| 1 | 0 | 39 | 0 |
| 2 | 0 | 40 | 0 |
| 3 | 0 | 41 | 0 |
| 4 | 0 | 42 | 0 |
| 5 | 0 | 43 | 0 |
| 6 | 0 | 44 | 0 |
| 7 | 0 | 45 | 0 |
| 8 | 0 | 46 | 1 |
| 9 | 0 | 47 | 0 |
| 10 | 0 | 48 | 0 |
| 11 | 0 | 49 | 0 |
| 12 | 0 | 50 | 0 |
| 13 | 0 | 51 | 0 |
| 14 | 0 | 52 | 0 |
| 15 | 0 | 53 | 0 |
| 16 | 0 | 54 | 0 |
| 17 | 1 | 55 | 0 |
| 18 | 0 | 56 | 0 |
| 19 | 1 | 57 | 0 |
| 20 | 0 | 58 | 0 |
| 21 | 0 | 59 | 0 |
| 22 | 0 | 60 | 1 |
| 23 | 0 | 61 | 1 |
| 24 | 0 | 62 | 1 |
| 25 | 0 | 63 | 0 |
| 26 | 1 | 64 | 1 |
| 27 | 0 | 65 | 1 |
| 28 | 0 | 66 | 1 |
| 29 | 0 | 67 | 0 |
| 30 | 0 | 68 | 0 |
| 31 | 0 | 69 | 0 |
| 32 | 0 | 70 | 0 |
| 33 | 0 | 71 | 0 |
| 34 | 0 | 72 | 0 |
| 35 | 0 | 73 | 1 |

Copyright National Electrical Manufacturers Association
Provided by IHS under license with NEMA
No reproduction or networking permitted without license from IHS

Not for Resale

| Page Number | Revision Number | Page Number | Revision Number |
|---|---|---|---|
| 74 | 1 | 102 | 0 |
| 75 | 1 | 103 | 0 |
| 76 | 0 | 104 | 0 |
| 77 | 1 | 105 | 0 |
| 78 | 0 | 106 | 0 |
| 79 | 0 | 107 | 0 |
| 80 | 1 | 108 | 0 |
| 81 | 0 | 109 | 0 |
| 82 | 1 | 110 | 0 |
| 83 | 0 | 111 | 0 |
| 84 | 1 | 112 | 0 |
| 85 | 0 | 113 | 0 |
| 86 | 0 | 114 | 0 |
| 87 | 0 | 115 | 0 |
| 88 | 0 | 116 | 0 |
| 89 | 0 | 117 | 0 |
| 90 | 0 | 118 | 0 |
| 91 | 0 | 119 | 1 |
| 92 | 0 | 120 | 0 |
| 93 | 0 | 121 | 1 |
| 94 | 0 | 122 | 0 |
| 95 | 0 | 123 | 0 |
| 96 | 0 | 124 | 0 |
| 97 | 0 | 125 | 0 |
| 98 | 0 | 126 | 0 |
| 99 | 0 | 127 | 0 |
| 100 | 0 | 128 | 0 |
| 101 | 0 | 129 | 0 |
| | | 130 | 0 |

Copyright National Electrical Manufacturers Association
Provided by IHS under license with NEMA
No reproduction or networking permitted without license from IHS

Not for Resale

NEMA WC*58 91 ■ 6470247 0502505 8T1 ■

ICEA PUBLICATION NO. S-75-381
STANDARD PUBLICATION NO. WC 58

icea / nema

# Portable and Power Feeder Cables for Use in Mines and Similar Applications







NATIONAL ELECTRICAL MANUFACTURERS ASSOCIATION ■ 2101 L STREET, N.W., SUITE 300, WASHINGTON, D.C. 20037
INSULATED CABLE ENGINEERS ASSOCIATION ■ P.O. BOX 440, SOUTH YARMOUTH, MA 02664

Copyright National Electrical Manufacturers Association
Provided by IHS under license with NEMA
No reproduction or networking permitted without license from IHS
Not for Resale

# NEMA STANDARDS PUBLICATION NO. WC 58-1991/ICEA S-75-381

## PORTABLE AND POWER FEEDER CABLES FOR USE IN MINES AND SIMILAR APPLICATIONS

Sponsored by:
**Insulated Cable Engineers Association, Inc.**
P.O. Box 440
South Yarmouth, MA 02664

Published by:
**National Electrical Manufacturers Association**
2101 L Street N.W., Suite 300
Washington, D.C. 20037-1526

© Copyright 1992 by National Electrical Manufacturers Association

Copyright National Electrical Manufacturers Association
Provided by IHS under license with NEMA
No reproduction or networking permitted without license from IHS
Not for Resale

# TABLE OF CONTENTS


| | | Page |
|---|---|---|
| | Foreword | i |
| | Scope | ii |
| **Section 1** | GENERAL | |
| | Cable Types Covered | 1 |
| | General Information | 1 |
| | Informaton to be Supplied by User | 2 |
| **Section 2** | CONDUCTORS | |
| | Wires, Physical and Electrical Properties | 3 |
| | Solid Conductors | 3 |
| | Stranded Conductors | 3 |
| | Conductor Size Units | 4 |
| | Conductor dc Resistance Per Unit Length | 4 |
| | Conductor Diameter | 4 |
| **Section 3** | PORTABLE SINGLE AND MULTIPLE CONDUCTOR POWER CABLE | |
| | Scope | 13 |
| | Direct Current Systems | 13 |
| | Single Conductor Cables, Nonshielded 2000 Volts or Less | 13 |
| | Type W and G Two-Conductor Cables, 2000 Volts or Less | 13 |
| | Type W, G, G-GC and G-CGC, Three and Four Conductor Cables, 2000 Volts or Less | 13 |
| | Type W and G, Five- and Six-Conductors, 2000 Volts or Less | 15 |
| | Type PG, Two and Three Power Conductors With Single Grounding Conductor, 2000 Volts or Less | 15 |
| | Type PCG, Two- and Three-Conductors With Grounding Conductor and Two Control Conductors, 2000 Volts or Less | 15 |
| | Type G, Three-Conductor Round With Grounding Conductors, 2001-5000 Volts | 15 |
| | Type SH, SHC-GC, SHD, SHD-GC and SHD-CGC Cables, 25,000 Volts or Less at 100 Percent Insulation Level Only | 15 |
| | Power Conductors | 16 |
| | Control and Ground-Check Conductors | 16 |
| | Grounding Conductors | 16 |
| | Stress Control Layer (Conductor Shield) | 17 |
| | Power Conductor Insulation | 17 |
| | Ground Check and Control Conductor Insulation | 18 |
| | Tapes and Braids | 18 |
| | Conductor Identification | 18 |
| | Shielding | 18 |
| | Conductor Assembly | 20 |
| | Jackets | 20 |
| | Completed Cable | 21 |
| | Three Conductor Type SHD-PCG, 5000 Volts or Less at 100 Percent Insulation Level Only | 22 |
| **Section 4** | CONSTRUCTIONS OF MINE POWER FEEDER CABLE | |
| | Scope | 46 |
| | General Requirements | 46 |


Copyright National Electrical Manufacturers Association
Provided by IHS under license with NEMA
No reproduction or networking permitted without license from IHS
Not for Resale

| | | Page |
|---|---|---|
| | Conductors | 46 |
| | Insulation | 46 |
| | Insulation Shielding | 46 |
| | Identification | 47 |
| | Conductor Assembly | 47 |
| | Jacket | 47 |
| | Outside diameter | 47 |
| | Tests | 47 |
| **Section 5** | SPECIAL CONSTRUCTIONS | |
| | Portable Arc-Welding Cables | 53 |
| **Section 6** | TESTING AND TEST METHODS | |
| | Testing | 59 |
| | Tests on Samples | 59 |
| | Conductor Test Methods | 59 |
| | Test Samples and Specimens for Physical and Aging Tests | 60 |
| | Short-time Dielectric Strength Test on Insulated Conductors | 66 |
| | Cold Bending and Long-time Dielectric Strength Test | 66 |
| | Capacity and Power Factor Tests | 67 |
| | Ozone Resisting Test | 67 |
| | Accelerated Water Absorption | 70 |
| | Surface Resistance | 72 |
| | Thickness of Tapes | 72 |
| | Heat Distortion | 72 |
| | Heat Shock | 73 |
| | Absorption Coefficient | 74 |
| | Cold Bend | 74 |
| | Environmental Cracking | 74 |
| | Hot Creep Test | 74 |
| | Solvent Extraction | 74 |
| | Volume Resistivity | 74 |
| | Stripping Test | 75 |
| | Retest for Test Covered by 6.9 Through 6.20 and 6.25 | 75 |
| | Electrical Test on Completed Cables-Voltage Tests | 75 |
| | Insulation Resistance | 76 |
| | Partial-discharge Test Procedure | 77 |
| | Method for Determining Permittivity (S.I.C.) and Dielectric Strength of Extruded Nonconducting Polymeric Stress Control Layers | 77 |
| **Section 7** | SUPPLEMENT FOR PORTABLE POWER CABLES | |
| | Scope | 79 |
| | Cable Types | 79 |
| | General Description of Completed Cable | 79 |
| | Power Conductors | 80 |
| | Control and Ground Check Conductors | 80 |
| | Grounding Conductors | 80 |
| | Conductor Stress Control | 81 |
| | Insulation | 81 |


Copyright National Electrical Manufacturers Association
Provided by IHS under license with NEMA
No reproduction or networking permitted without license from IHS
Not for Resale

Page

Tapes and Braids . . . . . 81
Conductor Identification . . . . . 81
Shielding . . . . . 81
Assembly of Round Cables . . . . . 81
Jackets . . . . . 81
Outside Diameters . . . . . 81
Marking . . . . . 82
Completed Cable Tests . . . . . 82

**Section 8** SUPPLEMENT FOR MINE POWER FEEDER CABLES
Scope . . . . . 99
General Requirements . . . . . 99
Conductors . . . . . 99
Insulation . . . . . 99
Insulation Shielding . . . . . 99
Identification . . . . . 99
Conductor Assembly . . . . . 99
Jacket . . . . . 99
Outside Diameters . . . . . 99
Tests . . . . . 99

**Section 9** Appendices

**Appendix A** Abbreviations and Symbols . . . . . 105
**Appendix B** Definitions for Maximum Temperature of Conductors in Insulated Wire and Cable . . . . . 107
**Appendix C** Emergency Overload Rating for Insulated Cables . . . . . 109
**Appendix D** ICEA Publications, ASTM and NEMA Standards . . . . . 111
**Appendix E** Shielding . . . . . 113
**Appendix F** Minimum Bending Radius for Cables . . . . . 115
**Appendix G** Minimum Drum Diameter of Shipping Reels . . . . . 117
**Appendix H** Ampacities and Voltage Ratings of Portable Cables . . . . . 119
**Appendix I** Ampacities for Three-Conductor Mine Power Cables . . . . . 121
**Appendix J** Flexible Cords and Remote Control and Drill Corps . . . . . 123
**Appendix K** Additional Conductor Information . . . . . 125


Copyright National Electrical Manufacturers Association
Provided by IHS under license with NEMA
No reproduction or networking permitted without license from IHS
Not for Resale

# Foreword

This Standards Publication for portable and power feeder cables for use in mines and similar applications (ICEA S-75-381-1990, NEMA WC 58) was developed by the Insulated Cable Engineers Association and approved by the National Electrical Manufacturers Association.

ICEA/NEMA Standards are adopted in the public interest and are designed to eliminate misunderstanding between the manufacturer and the user and to assist the user in selecting and obtaining the proper product for the particular need. Existence of an ICEA/NEMA Standard does not in any respect preclude the manufacture or use of products not conforming to the standard. The user of this standard is cautioned to observe any health or safety regulations and rules relative to the manufacture and use of cable made in conformity with this standard.

Requests for interpretation of this Standard must be submitted in writing to the Insulated Cable Engineers Association, P.O. Box 440, South Yarmouth, Massachusetts 02664. An official written interpretation will be provided. Suggestions for improvements gained in the use of this publication will be welcomed by the Association.

Copyright National Electrical Manufacturers Association
Provided by IHS under license with NEMA
No reproduction or networking permitted without license from IHS

Not for Resale

## Scope

These standards apply to materials, constructions and testing of insulated cables used for the distribution of electrical energy in surface and underground mines and similar applications. Included are portable cables for use in mining machines, dredges, shovels and the like, and mine power cables for use as connections between units of mine distribution system.

Copyright National Electrical Manufacturers Association
Provided by IHS under license with NEMA
No reproduction or networking permitted without license from IHS

Not for Resale

# Section 1
# GENERAL

## 1.1 CABLE TYPES COVERED

The cables covered in this standard are of the following types:

**Portable Cables—2000 Volts or Less**

Type W without grounding conductors
Type G with grounding conductors
Type G-GC with grounding conductors and one ground check conductor
Type G-CGC with grounding conductors and one ground check conductor in center
Type PG with single grounding conductor
Type PCG with single grounding conductor and two control conductors
Type SHC-GC multiconductor with grounding conductors, one ground check conductor and overall shield

**Portable Cables—2001–5000 Volts (100% Insulation Level)**

Type G with grounding conductors

**Portable Cables—0–25000 Volts (100% Insulation Level)**

Type SH shielded single conductor
Type SHD with individually shielded power conductors and grounding conductors
Type SHD-GC with individually shielded power conductors, grounding conductors and one ground check conductor
Type SHD-CGC with individually shielded power conductors, grounding conductors and one ground check conductor in center

**Mine Power—2001–15000 Volts (100% & 133% Insulation Level)**

Type MP with individually shielded power conductors and grounding conductors
Type MP-GC with individually shielded power conductors, grounding conductors, and one ground check conductor

## 1.2 GENERAL INFORMATION

The information in this publication is divided into eight sections including two supplements. Sections 3 and 4 cover portable and mine power cables, respectively, with either crosslinked polyethylene or ethylene propylene rubber insulations for phase conductors, plus ground check conductor insulations. Section 5 contains special constructions. Section 6 covers test methods. The supplements (Sections 7 and 8) include portable and mine power cables with other crosslinked insulations. Insulation thicknesses, voltage ratings, and test requirements for the constructions contained in the supplements differ from those in Sections 3 and 4. Section 9 contains the appendices.

In this standard, temperatures are expressed in degrees Celsius, masses in grams, liquid volumes in cubic centimeters, and metal resistivities in nanoohm-meter. Other properties are expressed in non-metric units used in the U.S.A.

The Fahrenheit equivalents to degrees Celsius may be calculated by the equation $°F = (1.8 \times °C) + 32$. The ounce equivalents to grams may be calculated by dividing the number of grams by 28.35. The liquid ounce equivalent to cubic-centimeters by dividing cubic centimeters by 29.57. The ohm-circular mil per foot equivalent of nanoohm-meter may be calculated by multiplying nanoohm-meter by 0.602.

Room temperature is defined as 23±5°C. Where this temperature cannot be maintained, (test) measurements may be made at the prevailing ambient room temperature, which shall be recorded.

Conductor size is expressed by cross-sectional area in thousand circular mils (kcmil). For convenience, in the text and several tables, only the equivalent AWG size is used for 211.6 kcmil (4/0 AWG) and smaller conductors. For the kcmil values of AWG sizes, see Section 2.

To convert values in a non-metric unit to the approximate value in an appropriate metric unit, multiply the value in the non-metric unit by the appropriate number from the following table:

Copyright National Electrical Manufacturers Association
Provided by IHS under license with NEMA
No reproduction or networking permitted without license from IHS
Not for Resale

| From | To | Multiplier |
|---|---|---|
| feet (ft) | meters | 0.305 |
| inches (in) | millimeters (mm) | 25.4 |
| square inches ($in^2$) | square millimeters ($mm^2$) | 645 |
| thousand circular mils (kcmil) | square millimeters ($mm^2$) | 0.507 |
| ounces avoirdupois (oz. av.) | grams (gm) | 28.4 |
| pounds per 1000 ft. | kilogram per km | 1.49 |
| pounds per square inch (psi) | kilopascals (kPa) | 6.89 |
| pounds tension or force per inch (lb/in) | newtons per meter (N/m) | 175 |
| ohms per 1000 feet (Ω/1000 ft.) | milliohms per meter (mΩ/m) | 3.28 |
| kilovolts per inch or volts per mil (kV/in or V/mil) | megavolts per meter or kilovolts per millimeter | 0.394 |
| megohms-1000 feet (MΩ-1000 ft.) | megohms-meter (MΩ-m) | 305 |
| gigaohms-1000 feet (GΩ-1000 ft.) | gigaohms-meter (G Ω-m) | 305 |

In classifying cable components in this Standard, the following nomenclature is used:

**Metal Tape**--A relatively thin and narrow metal strip which includes straps and ribbons.

**Jacket**--A polymeric (nonmetallic) protective covering applied over the insulation, assembled core, shield, sheath, or armor of a cable; e.g. a PVC jacket.

## 1.3 INFORMATION TO BE SUPPLIED BY USER

When requesting proposals from cable manufacturers, the prospective user should describe the cable in reference to pertinent sections of these standards. To help avoid misunderstanding and possible misapplication of cable, the user should also provide pertinent information concerning the intended application.

Copyright National Electrical Manufacturers Association
Provided by IHS under license with NEMA
No reproduction or networking permitted without license from IHS

Not for Resale

# Section 2
# CONDUCTORS

Requirements of a referenced ASTM standard shall be determined in accordance with the procedure or method designated in the referenced ASTM standard unless otherwise specified in the standard.

The following technical information on typical conductors may be found in Appendix K

a. Approximate diameters of individual wires in stranded conductors.
b. Approximate diameters of conductors not listed in Table 2-6.
c. Approximate conductor weights.

## 2.1 WIRES, PHYSICAL AND ELECTRICAL PROPERTIES

The wires used in conductors shall be copper in accordance with 2.1.1 or aluminum in accordance with 2.1.2.

### 2.1.1 Copper Wires

Copper wires shall meet the requirements of 2.1.1.1 and either 2.1.1.2 or 2.1.1.3. The 2.1.1.3 option shall apply only to non-compressed and non-compact conductors.

**2.1.1.1** Copper wires shall meet the chemical requirements of ASTM B 5.

**2.1.1.2** Soft or annealed copper wires intended for a stranded conductor shall meet the elongation, finish and coating continuity requirements of one of the following:

a. ASTM B 3 for uncoated wires.
b. ASTM B 33 for tin-coated wires.
c. ASTM B 189 for lead or lead-alloy-coated wires.

**2.1.1.3** Copper wires removed from a concentric lay stranded conductor, annealed after stranding, shall meet the elongation requirements of ASTM B 8, Sections 8.4, 8.5, and 8.6.

### 2.1.2 Aluminum Wires

Aluminum wires shall meet the requirements of 2.1.2.1 and either 2.1.2.2 or 2.1.2.3. The 2.1.2.3 option shall apply only to non-compressed and non-compact conductors. The requirements of 2.1.2.1 or 2.1.2.3 shall not apply, if the requirements of 2.3.1 or 2.3.2 are met.

**2.1.2.1** Aluminum 1350 wires shall meet the chemical requirements of ASTM B 233. Aluminum alloy wires shall contain a minimum of 97 percent aluminum by weight.

**2.1.2.2** Aluminum 1350 and aluminum alloy wires intended for a stranded conductor shall meet one of the following:

a. Hard-drawn wire shall meet the tensile, elongation, finish and brittleness requirements of ASTM B 230.
b. Annealed or intermediate temper wire shall meet the tensile and finish requirements of ASTM B 609.

**2.1.2.3** Aluminum 1350 and aluminum alloy wires removed from a concentric lay stranded conductor shall meet the tensile requirements and bending properties of ASTM B 231, Sections 8.5 and 8.6 or 9.2 and 9.4.

## 2.2 SOLID CONDUCTORS

Solid conductors shall not be used.

## 2.3 STRANDED CONDUCTORS

Stranded conductors shall consist of a number of wires individually meeting the appropriate requirements of 2.1. All wires in a stranded conductor shall be of the same material and temper.

*Exception:* Coated wires shall be permitted to be used in only the outer layer of an uncoated conductor in order to obtain free stripping of the adjacent polymeric layer. The direct current resistance of the resulting conductor shall not exceed the value specified for an uncoated conductor of the same size.

The requirements for lay, joints, and number of wires shall be in accordance with Table 2-1.

### 2.3.1 Concentric-lay-stranded Aluminum Conductors

Concentric-lay-stranded aluminum conductors including compressed strand, if tested as a unit as an alternative to 2.1.2.2 or 2.1.2.3 and before application of any coverings, shall meet the tensile requirements and bending properties of ASTM B 231, Sections 8.2 to 8.4 and 8.6 or Sections 9.3 and 9.4.

### 2.3.2 Compact Stranded Aluminum Conductors

Compact stranded aluminum conductors when tested as a unit as an alternative to 2.1.2.2 and before application of any coverings, shall meet the tensile requirements of ASTM B 400, Section 8.2 of Section 9.

Copyright National Electrical Manufacturers Association
Provided by IHS under license with NEMA
No reproduction or networking permitted without license from IHS

Not for Resale

**Table 2-1**
**REQUIREMENTS FOR LAY, JOINTS AND NUMBER OF WIRES**

1. ASTM B 8 for concentric-lay Class B, C, or D stranded copper conductors.

2. ASTM B 172 for rope-lay stranded copper conductors with bunch-stranded members.

3. ASTM B 173 for rope-lay stranded copper conductors with concentric-stranded members.

4. ASTM B 174 for bunch-stranded copper conductors.

5. ASTM B 496 for compact-round stranded copper conductors.

6. ASTM B 231 for concentric-lay Class B or C stranded aluminum 1350 or aluminum alloy conductors.

7. ASTM B 400 for compact-round stranded aluminum 1350 or aluminum alloy conductors.

## 2.4 CONDUCTOR SIZE UNITS

Conductor size shall be expressed by cross-sectional area in thousand circular mils (kcmil). The AWG equivalents for small sizes shall be found in Table 2-7.

## 2.5 CONDUCTOR DC RESISTANCE PER UNIT LENGTH

The dc resistance per unit length of each conductor in a production or shipping length of completed cable shall not exceed the value determined from the schedule of maximum dc resistances specified in Table 2-3 when using the appropriate nominal value specified in Table 2-4, Table 2-5, and Table 2-6. The dc resistance shall be determined in accordance with 2.5.1 or 2.5.2.

Where the resistance is measured on a single conductor sample taken from a multiple conductor cable, or where the resistance is calculated, the appropriate maximum resistance value specified for a single conductor sample shall apply.

### 2.5.1 Direct Measurement of Conductor dc Resistance Per Unit Length

The dc resistance per unit length of finished cable shall be determined by dc resistance measurements made in accordance with 6.3.1 to an accuracy of 0.2 percent or better. If measurements are made at a different temperature than 25°C (77°F), the measured value shall be converted to resistance at 25°C (77°F) by using either of the following:

a. The appropriate multiplying factor from Table 6-1.
b. A multiplying factor calculated using the applicable formula in the footnote to Table 6-1.

If verification is required for the direct-current resistance measurement made on an entire length of completed cable, a sample at least 1 foot (30.5 cm) long shall be cut from that reel length, and the direct-current resistance of each conductor shall be measured using a Kelvin-type bridge or a potentiometer.

Where an uninsulated conductor is in contact with another metallic or conductive component of the cable, measurements shall be made on a sample taken from the completed cable.

### 2.5.2 Calculation of DC Resistance Per Unit Length

The dc resistance per unit length at 25°C shall be calculated using the following formula:

$$R = K\rho/A$$

Where:

R = Conductor resistance in Ω/1000 ft.
K = Weight increment factor, as given in Table 2-2.
ρ = Volume resistivity in Ωcmil/ft., determined in accordance with ASTM B 193 using round wires.
A = Cross-sectional area of conductor in kcmil, determined in accordance with 6.3.2.1 or for 6.3.2.2 for concentric-lay, rope-lay, and bunch-stranded conductors or 6.3.2.2 for compressed or compact-stranded conductors.

When the volume resistivity is expressed in nanoohm meter (nΩ-m) and area is expressed in square millimeters ($mm^2$) the resistance is expressed in milliohm per meter (mΩ/m).

## 2.6 CONDUCTOR DIAMETER

The diameter of a conductor having a diameter less than 0.750 inch shall be measured in accordance with 6.3.3.1. The diameter of a conductor having a diameter 0.750 inch (19 mm) or larger shall be measured in accordance with 6.3.3.1 or 6.3.3.2. The diameter shall not differ from the nominal values shown in Table 2-7 by more than plus or minus 5 percent.

**2.6.1** The 5 percent diameter tolerance, for Class B or C stranded conductors only, is provided to enable a designer of connectors to determine the range of conductor sizes which will fit a particular connector; however, a conductor meeting the minimum diameter requirement does not necessarily meet the requirements for maximum dc resistance given in 2.5.

**2.6.2** If one or more layers of any concentric lay stranded Class B, C, or D conductor is compressed to reduce the noncompressed outside diameter, the compression shall not exceed 3 percent.

Copyright National Electrical Manufacturers Association
Provided by IHS under license with NEMA
No reproduction or networking permitted without license from IHS
Not for Resale

**Table 2-2**
**WEIGHT INCREMENT FACTORS*, K**

| | |
|---|---|
| Concentric-lay Strand, Class B, C, and D | |
| All sizes | 1.02 |
| Rope-lay Strand Having Concentric-Stranded *Members*, Classes G and H | |
| 49 wires | 1.03 |
| 133 wires | 1.04 |
| 259 wires | 1.045 |
| 427 wires | 1.05 |
| Over 427 wires | 1.06 |
| Bunched Strand, single bunches | |
| All sizes | 1.02 |
| Rope-lay Strand Having Bunch-Stranded *Members*, Classes I, K, and M | |
| 7 bunch stranded members | 1.04 |
| 19 | 1.05 |
| 37 | 1.05 |
| 61 | 1.05 |
| 7 x7 bunch stranded members | 1.06 |
| 19 x 7 | 1.07 |
| 37 x 7 | 1.07 |
| 61 x 7 | 1.07 |

* Based on the method specified in either ASTM B 8, ASTM B 496, ASTM B 400, ASTM B 231, ASTM B 172, ASTM B 173 or ASTM B 174 as applicable.

Copyright National Electrical Manufacturers Association
Provided by IHS under license with NEMA
No reproduction or networking permitted without license from IHS

Not for Resale

**Table 2-3**
**SCHEDULE FOR ESTABLISHING MAXIMUM DIRECT CURRENT RESISTANCE PER UNIT LENGTH**

| Completed Mine Power Cables | |
|---|---|
| **Cable Type** | **Maximum dc resistance/unit length** |
| Multiple Conductor Cables | Table 2-1[a] Value Plus 4% |
| Single Conductor Cables | Table 2-4 Value Plus 2% |

| Portable Cables | |
|---|---|
| **Cable Type** | **Maximum dc resistance/unit length** |
| Single Conductor Cables | |
| Flat Parallel Cables | Table 2-5[a] or 2-6[a] Value Plus 2%<br>(R max = R x 1.02) |
| Multiple Conductor Cables | |
| Twisted Assemblies of Single Conductor Cables | Table 2-5[a] or 2-6[a] Value Plus 2%Plus 5%<br>(R max = R x 1.02 x 1.05) |

[a] For conductor strandings or sizes not listed in Tables 2-4 through 2-6 the nominal direct current resistance per unit length of a completed single conductor cable shall be calculated from the factors given in Table 2-8 using the following formula:

$R = 10^{-3}f/A$

Where:

R = Conductor resistance in Ω/1000 ft.
f = Factor from Table 2-8 in ohms cmil/1000 ft.
A = Cross-sectional area of conductor in kcmil

See 2.5.2 for cross-sectional area determination

Copyright National Electrical Manufacturers Association
Provided by IHS under license with NEMA
No reproduction or networking permitted without license from IHS

Not for Resale

## Table 2-4
## NOMINAL DIRECT CURRENT RESISTANCE IN OHMS PER 1000 FEET**AT 25°C (77°F) OF SOLID AND CONCENTRIC LAY STRANDED CONDUCTOR

| | Concentric Lay Stranded* | | | | |
|---|---|---|---|---|---|
| | Aluminum | Copper | | | |
| Conductor Size AWG or kcmil | Aluminum Class B, C, D | Uncoated Class B, C, D | Coated Class B | Coated Class C | Coated Class D |
| 14 | 4.31 | 2.63 | 2.73 | 2.79 | 2.83 |
| 13 | 3.41 | 2.08 | 2.16 | 2.21 | 2.22 |
| 12 | 2.72 | 1.66 | 1.72 | 1.75 | 1.75 |
| 11 | 2.15 | 1.31 | 1.36 | 1.36 | 1.39 |
| 10 | 1.70 | 1.04 | 1.08 | 1.08 | 1.11 |
| 9 | 1.35 | 0.825 | 0.856 | 0.856 | 0.874 |
| 8 | 1.07 | 0.652 | 0.678 | 0.678 | 0.680 |
| 7 | 0.851 | 0.519 | 0.538 | 0.538 | 0.538 |
| 6 | 0.675 | 0.411 | 0.427 | 0.427 | 0.427 |
| 5 | 0.534 | 0.325 | 0.338 | 0.338 | 0.339 |
| 4 | 0.424 | 0.258 | 0.269 | 0.269 | 0.269 |
| 3 | 0.336 | 0.205 | 0.213 | 0.213 | 0.213 |
| 2 | 0.266 | 0.162 | 0.169 | 0.169 | 0.169 |
| 1 | 0.211 | 0.129 | 0.134 | 0.134 | 0.134 |
| 1/0 | 0.168 | 0.102 | 0.106 | 0.106 | 0.106 |
| 2/0 | 0.133 | 0.0810 | 0.0842 | 0.0842 | 0.0842 |
| 3/0 | 0.105 | 0.0642 | 0.0667 | 0.0669 | 0.0669 |
| 4/0 | 0.0836 | 0.0510 | 0.0524 | 0.0530 | 0.0530 |
| 250 | 0.0707 | 0.0431 | 0.0448 | 0.0448 | 0.0448 |
| 300 | 0.0590 | 0.0360 | 0.0374 | 0.0374 | 0.0374 |
| 350 | 0.0505 | 0.0308 | 0.0320 | 0.0320 | 0.0320 |
| 400 | 0.0442 | 0.0269 | 0.0277 | 0.0280 | 0.0280 |
| 450 | 0.0393 | 0.0240 | 0.0246 | 0.0249 | 0.0249 |
| 500 | 0.0354 | 0.0216 | 0.0222 | 0.0224 | 0.0224 |
| 550 | 0.0321 | 0.0196 | 0.0204 | 0.0204 | 0.0204 |
| 600 | 0.0295 | 0.0180 | 0.0187 | 0.0187 | 0.0187 |
| 650 | 0.0272 | 0.0166 | 0.0171 | 0.0172 | 0.0173 |
| 700 | 0.0253 | 0.0154 | 0.0159 | 0.0160 | 0.0160 |
| 750 | 0.0236 | 0.0144 | 0.0148 | 0.0149 | 0.0150 |
| 800 | 0.0221 | 0.0135 | 0.0139 | 0.0140 | 0.0140 |
| 900 | 0.0196 | 0.0120 | 0.0123 | 0.0126 | 0.0126 |
| 1000 | 0.0177 | 0.0108 | 0.0111 | 0.0111 | 0.0112 |

*Concentric lay stranded includes compressed and compact conductors.

** Resistance values in milliohms per meter shall be obtained by multiplying the above values by 3.28.

Copyright National Electrical Manufacturers Association
Provided by IHS under license with NEMA
No reproduction or networking permitted without license from IHS

Not for Resale

**Table 2-5**
**NOMINAL DIRECT CURRENT RESISTANCE IN OHMS PER 1000 FEET* AT 25°C (77°F) FOR FLEXIBLE ALUMINUM CONDUCTORS**

| Conductor Site | Class G | Class H | Class I |
|---|---|---|---|
| AWG or kcmil | ... | ... | |
| 8 | ... | ... | 1.07 |
| 7 | 0.858 | ... | 0.850 |
| 6 | 0.681 | ... | 0.687 |
| 5 | 0.540 | ... | 0.545 |
| 4 | 0.428 | ... | 0.432 |
| 3 | 0.340 | ... | 0.343 |
| 2 | 0.269 | 0.272 | 0.272 |
| 1 | 0.216 | ... | 0.216 |
| 1/0 | 0.171 | 0.172 | 0.172 |
| 2/0 | 0.136 | 0.136 | 0.137 |
| 3/0 | 0.107 | 0.108 | 0.109 |
| 4/0 | 0.0852 | 0.0857 | 0.0861 |
| 250 | 0.0725 | 0.0728 | 0.0735 |
| 300 | 0.0604 | 0.0607 | 0.0613 |
| 350 | 0.0518 | 0.0520 | 0.0525 |
| 400 | 0.0453 | 0.0455 | 0.0460 |
| 450 | 0.0403 | 0.0405 | 0.0409 |
| 500 | 0.0363 | 0.0364 | 0.0368 |
| 550 | 0.0331 | 0.0334 | 0.0334 |
| 600 | 0.0304 | 0.0306 | 0.0306 |
| 650 | 0.0280 | 0.0283 | 0.0286 |
| 700 | 0.0260 | 0.0263 | 0.0265 |
| 750 | 0.0243 | 0.0245 | 0.0247 |
| 800 | 0.0228 | 0.0230 | 0.0232 |
| 900 | 0.0202 | 0.0204 | 0.0206 |
| 1000 | 0.0182 | 0.0184 | 0.0186 |

*Resistance values in milliohms per meter shall be obtained by multiplying the above values by 3.28.

Copyright National Electrical Manufacturers Association
Provided by IHS under license with NEMA
No reproduction or networking permitted without license from IHS
Not for Resale

**Table 2-6**
**NOMINAL DIRECT CURRENT RESISTANCE IN PHMS PER 1000 FEET* AT 25°C (77°F) FOR FLEXIBLE ANNEALED COPPER CONDUCTORS**

| | Uncoated | | | | | Coated | | | | |
|---|---|---|---|---|---|---|---|---|---|---|
| Conductor Size | Class G | Class H | Class I | Class K | Class M | Class G | Class H | Class I | Class K | Class M |
| AWG or kcmil | | | | | | | | | | |
| | ... | ... | ... | ... | ... | ... | | | | |
| | ... | ... | ... | ... | ... | ... | | | | |
| 14 | 2.65 | ... | ... | 2.62 | 2.62 | 2.81 | ... | ... | 2.82 | 2.82 |
| 12 | 1.67 | ... | ... | 1.65 | 1.68 | 1.77 | ... | ... | 1.77 | 1.81 |
| 10 | 1.05 | ... | 1.04 | 1.04 | 1.06 | 1.11 | ... | 1.08 | 1.12 | 1.14 |
| 9 | 0.832 | ... | 0.824 | 0.840 | 0.840 | 0.884 | ... | 0.857 | 0.902 | 0.902 |
| 8 | 0.660 | 0.666 | 0.653 | 0.666 | 0.666 | 0.701 | 0.708 | 0.679 | 0.715 | 0.715 |
| 7 | 0.523 | 0.528 | 0.518 | 0.528 | 0.533 | 0.544 | 0.561 | 0.539 | 0.567 | 0.573 |
| 6 | 0.415 | 0.419 | 0.419 | 0.419 | 0.423 | 0.432 | 0.445 | 0.436 | 0.450 | 0.454 |
| 5 | 0.329 | 0.332 | 0.332 | 0.332 | 0.336 | 0.342 | 0.353 | 0.346 | 0.357 | 0.360 |
| 4 | 0.261 | 0.263 | 0.263 | 0.263 | 0.266 | 0.271 | 0.280 | 0.274 | 0.283 | 0.286 |
| 3 | 0.207 | 0.209 | 0.209 | 0.211 | 0.213 | 0.215 | 0.222 | 0.217 | 0.227 | 0.227 |
| 2 | 0.164 | 0.166 | 0.166 | 0.167 | 0.169 | 0.171 | 0.172 | 0.172 | 0.180 | 0.181 |
| 1 | 0.131 | 0.132 | 0.131 | 0.133 | 0.134 | 0.137 | 0.140 | 0.137 | 0.142 | 0.144 |
| 1/0 | 0.104 | 0.105 | 0.105 | 0.105 | 0.106 | 0.108 | 0.109 | 0.109 | 0.113 | 0.114 |
| 2/0 | 0.0826 | 0.0830 | 0.0834 | 0.0842 | 0.0850 | 0.0859 | 0.0863 | 0.0868 | 0.0904 | 0.0913 |
| 3/0 | 0.0655 | 0.0659 | 0.0662 | 0.0668 | 0.0674 | 0.0682 | 0.0685 | 0.0688 | 0.0717 | 0.0724 |
| 4/0 | 0.0520 | 0.0522 | 0.0525 | 0.0530 | 0.0535 | 0.0541 | 0.0543 | 0.0546 | 0.0569 | 0.0574 |
| 250 | 0.0442 | 0.0444 | 0.0448 | 0.0448 | 0.0453 | 0.0460 | 0.0462 | 0.0466 | 0.0481 | 0.0486 |
| 300 | 0.0368 | 0.0370 | 0.0374 | 0.0374 | 0.0377 | 0.0383 | 0.0385 | 0.0389 | 0.0401 | 0.0405 |
| 350 | 0.0316 | 0.0317 | 0.0320 | 0.0323 | 0.0323 | 0.0328 | 0.0330 | 0.0333 | 0.0347 | 0.0347 |
| 400 | 0.0276 | 0.0278 | 0.0280 | 0.0283 | 0.0283 | 0.0287 | 0.0289 | 0.0291 | 0.0304 | 0.0304 |
| 450 | 0.0246 | 0.0247 | 0.0249 | 0.0251 | 0.0251 | 0.0255 | 0.0257 | 0.0259 | 0.0270 | 0.0262 |
| 500 | 0.0221 | 0.0222 | 0.0224 | 0.0226 | 0.0226 | 0.0230 | 0.0231 | 0.0233 | 0.0243 | 0.0243 |
| 550 | 0.0202 | 0.0204 | 0.0204 | 0.0206 | 0.0206 | 0.0210 | 0.0212 | 0.0212 | 0.0221 | 0.0221 |
| 600 | 0.0185 | 0.0187 | 0.0187 | 0.0189 | 0.0189 | 0.0192 | 0.0194 | 0.0194 | 0.0203 | 0.0202 |
| 650 | 0.0171 | 0.0172 | 0.0174 | 0.0174 | 0.0174 | 0.0178 | 0.0179 | 0.0181 | 0.0187 | 0.0187 |
| 700 | 0.0159 | 0.0168 | 0.0162 | 0.0162 | 0.0162 | 0.0165 | 0.0167 | 0.0168 | 0.0174 | 0.0174 |
| 750 | 0.0148 | 0.0149 | 0.0151 | 0.0151 | 0.0151 | 0.0154 | 0.0155 | 0.0157 | 0.0162 | 0.0162 |
| 800 | 0.0139 | 0.0140 | 0.0141 | 0.0141 | 0.0141 | 0.0144 | 0.0146 | 0.0147 | 0.0152 | 0.0152 |
| 900 | 0.0123 | 0.0125 | 0.0126 | 0.0126 | 0.0126 | 0.0128 | 0.0130 | 0.0131 | 0.0135 | 0.0135 |
| 1000 | 0.0111 | 0.0112 | 0.0113 | 0.0113 | 0.0113 | 0.0115 | 0.0117 | 0.0118 | 0.0122 | 0.0121 |

*Resistance values in milliohms per meter shall be obtained by multiplying the above values by 3.28.

Copyright National Electrical Manufacturers Association
Provided by IHS under license with NEMA
No reproduction or networking permitted without license from IHS

Not for Resale

## Table 2-7
## NOMINAL DIAMETERS FOR COPPER AND ALUMINUM CONDUCTORS

| Conductor Size AWG | Conductor Size kcmil | Nominal Diameters* Concentric Lay Stranded Compact Inch | Compressed Inch | Class B Inch | Class C Inch | Class D Inch |
|---|---|---|---|---|---|---|
| ... | ... | ... | ... | ... | ... | ... |
| ... | ... | ... | ... | ... | ... | ... |
| ... | ... | ... | ... | ... | ... | ... |
| ... | ... | ... | ... | ... | ... | ... |
| 14 | 4.11 | ... | 0.0704 | 0.0727 | 0.0735 | 0.0735 |
| 13 | 5.18 | ... | 0.0792 | 0.0816 | 0.0825 | 0.0826 |
| 12 | 6.53 | ... | 0.0888 | 0.0915 | 0.0925 | 0.0931 |
| 11 | 8.23 | ... | 0.0998 | 0.0103 | 0.104 | 0.104 |
| 10 | 10.38 | ... | 0.112 | 0.116 | 0.117 | 0.117 |
| 9 | 13.09 | ... | 0.126 | 0.130 | 0.131 | 0.132 |
| 8 | 16.51 | 0.134 | 0.141 | 0.146 | 0.148 | 0.148 |
| 7 | 20.82 | ... | 0.158 | 0.164 | 0.166 | 0.166 |
| 6 | 26.24 | 0.169 | 0.178 | 0.184 | 0.186 | 0.186 |
| 5 | 33.09 | ... | 0.200 | 0.206 | 0.208 | 0.209 |
| 4 | 41.74 | 0.213 | 0.225 | 0.232 | 0.234 | 0.235 |
| 3 | 52.62 | 0.238 | 0.252 | 0.260 | 0.263 | 0.264 |
| 2 | 66.36 | 0.268 | 0.283 | 0.292 | 0.296 | 0.297 |
| 1 | 83.69 | 0.299 | 0.322 | 0.332 | 0.333 | 0.333 |
| 1/0 | 105.6 | 0.336 | 0.361 | 0.372 | 0.374 | 0.374 |
| 2/0 | 133.1 | 0.376 | 0.406 | 0.418 | 0.420 | 0.420 |
| 3/0 | 167.8 | 0.423 | 0.456 | 0.470 | 0.471 | 0.472 |
| 4/0 | 211.6 | 0.475 | 0.512 | 0.528 | 0.529 | 0.530 |
| | 250 | 0.520 | 0.558 | 0.575 | 0.576 | 0.576 |
| | 300 | 0.570 | 0.611 | 0.630 | 0.631 | 0.631 |
| | 350 | 0.616 | 0.661 | 0.681 | 0.681 | 0.682 |
| | 400 | 0.659 | 0.706 | 0.728 | 0.729 | 0.729 |
| | 450 | 0.700 | 0.749 | 0.772 | 0.773 | 0.773 |
| | 500 | 0.736 | 0.789 | 0.813 | 0.814 | 0.815 |
| | 550 | 0.775 | 0.829 | 0.855 | 0.855 | 0.855 |
| | 600 | 0.813 | 0.866 | 0.893 | 0.893 | 0.893 |
| | 650 | 0.845 | 0.901 | 0.929 | 0.930 | 0.930 |
| | 700 | 0.877 | 0.935 | 0.964 | 0.965 | 0.965 |
| | 750 | 0.908 | 0.968 | 0.998 | 0.999 | 0.998 |
| | 800 | 0.938 | 1.000 | 1.030 | 1.032 | 1.032 |
| | 900 | 0.999 | 1.061 | 1.094 | 1.093 | 1.095 |
| | 1000 | 1.060 | 1.117 | 1.152 | 1.153 | 1.153 |

*Diameters in millimeters shall be obtained by multiplying the above values in inches by 25.4

Copyright National Electrical Manufacturers Association
Provided by IHS under license with NEMA
No reproduction or networking permitted without license from IHS

Not for Resale

**Table 2-8***

**FACTORS** FOR DETERMINING NOMINAL RESISTANCE OF STRANDED CONDUCTORS PER 1000 FEET**

| Conductivity, Percent | All Sizes, Uncoated | | Diameter of Individual Coated Copper Wires in Inches for Stranded Conductors | | | | |
|---|---|---|---|---|---|---|---|
| | Aluminum 61 25°C | Copper 100 25°C | 0.460 to 0.290, Inclusive 97.66 25°C | Under 0.290 to 0.103, Inclusive 97.16 25°C | Under 0.103 to 0.0201, Inclusive 96.16 25°C | Under 0.0201 to 0.00111, Inclusive 94.16 25°C | Under 0.0111 to 0.0010, Inclusive 93.15 25°C |
| **Rope Stranded** | | | | | | | |
| 49 strands | 17865 | 10892 | 11153 | 11210 | 11327 | 11568 | ... |
| 133 strands | 18038 | 10993 | 11261 | 11319 | 11437 | 11681 | ... |
| 259 strands | 18125 | 11051 | 11315 | 11374 | 11492 | 11737 | ... |
| 427 strands | 18212 | 11104 | 11370 | 11428 | 11547 | 11793 | ... |
| Over 427 strands | 18385 | 11209 | 11478 | 11537 | 11657 | 11905 | ... |
| **Bunch Stranded** | | | | | | | |
| All sizes | 17691 | 10786 | ... | ... | 11217 | 11456 | 11579 |
| **Rope-Stranded Bunches** | | | | | | | |
| 7 ropes of bunched strands | 18038 | 10998 | ... | ... | 11437 | 11681 | 11806 |
| 19, 37 or 61 ropes of bunched strand | 18212 | 11104 | ... | ... | 11547 | 11793 | 11920 |
| 7 x 7 ropes of bunched strand | 18385 | 11209 | ... | ... | 11657 | 11905 | 12033 |
| 19, 37 or 61 x 7 ropes of bunched strand | 18559 | 11315 | ... | ... | 11767 | 12018 | 12147 |
| **Concentric Stranded** | | | | | | | |
| All sizes | 17692 | 10786 | 11045 | 11102 | 11217 | 11456 | 11580 |

Resistance Calculation:

$$R = \frac{\rho}{A \text{ in cmil}}$$

R = resistance in ohms/1000 ft.

ρ = resistivity in ohms cmil/1000 ft.

A = area in circular mils

*The factors given in Table 2-8 shall be based on the following:

A. Resistivity

1. A volume resistivity of 10.575 Ωcmil/ft (100% conductivity) at 25°C for uncoated (bare) copper.
2. A 25°C volume resistivity converted from the 20°C values specified in ASTM B 33 or ASTM B 189 for coated copper.
3. A volume resistivity of 17.345 Ω cmil/ft (16.0% conductivity at 25°C for aluminum.

B. Increase in Resistance Due to Stranding

1. The value of K (weight increment factor) given in Table 2-2.

**See 2.3 for Use of Factors.

Copyright National Electrical Manufacturers Association
Provided by IHS under license with NEMA
No reproduction or networking permitted without license from IHS
Not for Resale

Copyright National Electrical Manufacturers Association
Provided by IHS under license with NEMA
No reproduction or networking permitted without license from IHS

Not for Resale

# Section 3
# PORTABLE SINGLE AND MULTIPLE CONDUCTOR POWER CABLE

## 3.1 SCOPE

This section covers crosslinked polyethylene and ethylene-propylene-rubber insulated cables with copper conductors for portable use in sizes 8 AWG and larger for use in mining machines, dredges, shovels, and similar applications. These cables are distinguished by the requirements for the jackets given in 3.21 and Tables 3-3 and 3-4.

Details of construction and dimensions for the voltages at which these cables may be used are given in Table 3-5 through 3-22 and 3-25. Recommended ampacities and voltage ratings are given in Appendix H. Recommended bending radii are given in Appendix F & G. Consult the manufacturer for minimum bending radius for re-reeling applications.

The insulations are suitable for conductor temperatures not exceeding 90°C (194°F) for normal operation, 130°C (266°F) for emergency overload conditions and 250°C (482°F) for short-circuit conditions. (See Appendix B and C.)

## 3.2 DIRECT CURRENT SYSTEMS

Direct-current systems up to and including 2000 volts shall be considered the same as single-phase alternating-current systems. For systems over 2000 volts, consult the manufacturer.

## 3.3 SINGLE-CONDUCTOR CABLES, NON-SHIELDED, 2000 VOLTS OR LESS

These cables shall consist of an insulated conductor with a jacket which meets the requirements for 3.21 and shall be in accordance with Table 3-6. Normal-service cables shall have a heavy-duty jacket and hard-service cables shall have an extra heavy-duty jacket.

## 3.4 TYPE W AND G TWO-CONDUCTOR CABLES, 2000 VOLTS OR LESS

These cables shall be one or two types: (1) flat twin or (2) two conductor round.

### 3.4.1 Two Conductor Flat Twin Cables

#### 3.4.1.1 TYPE W, WITHOUT GROUNDING CONDUCTOR

These cables shall consist of two conductors which are separately covered with insulation meeting the requirements of 3.15 and they may have an additional covering (see 3.17). The insulated conductors are then laid parallel under a jacket which meets the requirements of 3.21. The insulated conductors shall be separated by a web of the jacket or other material. If the protective covering on the individual conductors is omitted, a reinforcement shall be applied either over the parallel conductors or within the jacket layers (see 3.21.2). The cables shall be in accordance with Table 3-7.

#### 3.4.1.2 TYPE G, WITH GROUNDING CONDUCTOR

These cables shall consist of two power conductors which are separately covered with insulation meeting the requirements of 3.15 and may have an additional covering (see 3.17). The two power conductors shall then be laid parallel with a single grounding conductor (see 3.13) between them under a jacket which meets the requirements of 3.21. If the protective covering on the power conductors is omitted, a reinforcement shall be applied either over the parallel conductors and grounding conductor or within the jacket (see 3.21.2). The cables shall be in accordance with Table 3.7.

### 3.4.2 Two-Conductor Round Cables

#### 3.4.2.1 TYPE W, WITHOUT GROUNDING CONDUCTOR

These cables shall consist of two conductors which are separately covered with insulation meeting the requirements of 3.15 and each conductor may have an additional covering (see 3.17). The power conductors, together with any necessary fillers, shall be cabled with a left-hand lay in accordance with Table 3-5 and covered with a jacket which meets the requirements of 3.21. The cables shall be in accordance with Table 3-8.

#### 3.4.2.2 TYPE G, WITH GROUNDING CONDUCTORS

These cables shall consist of two power conductors which are separately covered with insulation meeting the requirements of 3.15 and each conductor may have an additional covering (see 3.17). The power conductors, together with two grounding conductors (see 3.13) and any necessary fillers, shall be cabled with a left-hand lay in accordance with Table 3-5 and covered with a jacket which meets the requirements of 3.21. The cables shall be in accordance with Table 3-8.

## 3.5 TYPE W, G, G-GC AND G-CGC, THREE AND FOUR CONDUCTOR CABLES, 2000 VOLTS OR LESS

Three-conductor cables shall be one of six types: (1) Type W, round construction, without grounding conductors; (2) Type G, round construction, with grounding conductors: (3) Type G, flat construction, with grounding conductors; (4) Type G-GC, round construction, with grounding conductors and a ground check conductor; (5) Type G-GC, flat construction, with grounding conductor

Copyright National Electrical Manufacturers Association
Provided by IHS under license with NEMA
No reproduction or networking permitted without license from IHS
Not for Resale

and a ground check conductor; and (6) Type G-CGC, round construction, with grounding conductors and a center ground check conductor. Four-conductor cables shall be one of three types: (1) Type W, round construction, without grounding conductors; (2) Type G, round construction, with grounding conductors; and (3) Type W, flat construction without grounding conductors.

### 3.5.1 Three- and Four-Conductor, Round Type W Cables Without Grounding Conductors

These cables shall consist of three or four power conductors which are separately covered with insulation meeting the requirements of 3.15 and may have an additional covering (see 3.17). The conductors, together with any necessary fillers, shall be cabled with a left-hand lay in accordance with Table 3-5 and covered with a jacket which meets the requirements of 3.21. Three-conductor cables shall be in accordance with Table 3-9 and four-conductor cables shall be in accordance with Table 3-10.

### 3.5.2 Three- and Four-Conductor Round Type G Cables with Grounding Conductors

These cables shall consist of three or four power conductors which are separately covered with insulation meeting the requirements of 3.15 and may have an additional covering (see 3.17). The power conductors, together with an equal number of grounding conductors (see 3.13) and any necessary fillers, shall be cabled with a left-hand lay in accordance with Table 3-5 with one ground wire placed in each interstice. The assembly shall be covered with a jacket which meets the requirements of 3.21. Three-conductor cables shall be in accordance with Table 3-9 and four-conductor cables shall be in accordance with Table 3-10.

### 3.5.3 Three-Conductor Flat Type G Cable With Grounding Conductors

These cables shall consist of three power conductors which are separately covered with insulation meeting the requirements of 3.15 and may have an additional covering (see 3.17). The three power conductors shall then be laid parallel with two grounding conductors (see 3.13) in a vertical position between them and under a jacket which meets the requirements of 3.21. If the protective covering on the individual power conductors is omitted, a reinforcement shall be applied either over the parallel conductors and ground conductors or within the jacket. The cables shall be in accordance with Table 3-11.

### 3.5.4 Three-Conductor Flat G-GC Cables With Grounding Conductor and Ground Check Conductor

These cables shall consist of three power conductors which are separately covered with insulation meeting the requirements of 3.15 and may have an additional covering (see 3.17). The three power conductors shall be laid parallel with the insulated ground check conductor (see 3.12) in a vertical position between the black and white power conductors and with the grounding conductor (see 3.13) in a vertical position between the white and red conductors under a jacket which meets the requirements of 3.21. If the protective covering on the individual conductors is omitted, a reinforcement shall be applied either over the parallel conductors, grounding conductor and ground check conductor or within the jacket. The cables shall be in accordance with Table 3-13.

### 3.5.5 Three-Conductor Round Type G-GC and Type G-CGC Cable

#### 3.5.5.1 TYPE G-GC, THREE-CONDUCTOR ROUND WITH GROUNDING CONDUCTORS AND GROUND CHECK CONDUCTOR

These cables shall consist of three power conductors which are separately covered with insulation meeting the requirements of 3.15, two grounding conductors (see 3.13) and one ground check conductor (see 3.12.1). Each power and ground check conductor may have an additional covering (see 3.17). All power, grounding and ground check conductors and any necessary fillers shall be cabled with a left-hand lay in accordance with Table 3-5, and covered with a jacket which meets the requirements of 3.21. The ground check conductor shall be laid between the black and white power conductors. These cables shall be in accordance with Table 3-12.

#### 3.5.5.2 TYPE G-CGC, THREE-CONDUCTOR ROUND WITH GROUNDING CONDUCTORS AND A CENTER GROUND CHECK CONDUCTOR

These cables shall consist of three power conductors which are separately covered with insulation meeting the requirements of 3.15, three ground conductors (see 3.13) and one center ground-check conductor (see 3.12.2). Each power, and one insulated ground-check conductor, may have an additional covering (see 3.17). All power, grounding, and ground-check conductors and any necessary fillers shall be assembled with a left-hand lay in accordance with Table 3-5 and covered with a jacket which meets the requirements of 3.21. The ground-check conductor shall be laid in the center of the assembly with one grounding conductor in each of the outer three interstices. These cables shall be in accordance with Table 3-12A.

### 3.5.6 Four-Conductor Flat Type W Cable Without Grounding Conductors

These cables shall consist of four power conductors which are separately covered with insulation meeting the requirements of 3.15 and may have an additional covering (see 3.17). The four power conductors shall be laid parallel under a jacket which meets the requirements of 3.21. If the protective covering on the individual conductors is omit-

Copyright National Electrical Manufacturers Association
Provided by IHS under license with NEMA
No reproduction or networking permitted without license from IHS
Not for Resale

ted, a reinforcement shall be applied either over the parallel conductors or within the jacket. The cables shall be in accordance with Table 3-14. Conductor identification shall be in accordance with, and in the sequence of, 3.18.

### 3.6 TYPE W AND G, FIVE- AND SIX-CONDUCTOR, 2000 VOLTS OR LESS

Five conductor cables shall be one of two types: (1) Type W, without grounding conductors, and (2) Type G, with a grounding conductor. Six-conductor cables shall be Type W only.

#### 3.6.1 Five- And Six-Conductor Round Type W Cables Without Grounding Conductors

These cables shall consist of five or six conductors which are separately covered with insulation meeting the requirements of 3.15 and may have an additional covering (see 3.17). The conductors, together with any necessary fillers, shall be cabled with a left-hand lay in accordance with Table 3-5 and covered with a jacket which meets the requirements of 3.21. The cables shall be in accordance with Table 3-15.

#### 3.6.2 Five-Conductor Round Type G Cables with Grounding Conductors

These cables shall consist of five power conductors which are separately covered with insulation meeting the requirements of 3.15 and may have an additional covering (see 3.17). The power conductors, together with any necessary fillers, shall be cabled with a left-hand lay in accordance with Table 3-5 around a single grounding conductor and covered with a jacket which meets the requirements of 3.21. These cables shall be in accordance with Table 3-15.

### 3.7 TYPE PG, TWO- AND THREE-CONDUCTORS WITH GROUNDING CONDUCTOR, 2000 VOLTS OR LESS

These cables shall consist of two or three power conductors, which are separately covered with insulation meeting the requirements of 3.15 and may have an additional covering (see 3.17). The power conductors together with a single grounding conductor (see 3.13) and any necessary fillers, shall be cabled with a left-hand lay in accordance with Table 3-5. The grounding conductor shall be placed between the black and red conductors in the three conductor cable. The assembly shall be covered with a jacket which meets the requirements of 3.21. These cables shall be in accordance with Table 3-16.

### 3.8 TYPE PCG, TWO- AND THREE-CONDUCTORS WITH GROUNDING CONDUCTOR AND TWO CONTROL CONDUCTORS, 2000 VOLTS OR LESS

These cables shall consist of two or three power conductors, one grounding conductor, and two control conductors (see 3.12.1). The power conductors and control conductors shall be separately covered with insulation meeting the requirements of 3.15 and may have an additional covering (see 3.17). The power conductors together with two control conductors and the grounding conductor shall be cabled with a left-hand lay in accordance with Table 3-5. The single grounding conductor in the three conductor cable shall be placed between the black and red power conductors. Each control conductor shall be in a separate interstice. The black control conductor shall be between the black and white power conductors and the white control conductor shall be adjacent to the white power conductor. These cables shall be in accordance with Table 3-17. The assembly shall be covered with a jacket which meets the requirements of 3.21.

### 3.9 TYPE G, THREE-CONDUCTOR ROUND WITH GROUNDING CONDUCTORS, 2001–5000 VOLTS

These cables shall consist of three power conductors which are separately covered with insulation meeting the requirements of 3.15. Each power conductor shall be separately covered with a colored tape (see 3.17). The power conductors, together with an equal number of grounding conductors (see 3.13) and any necessary fillers, shall be cabled with a left-hand lay in accordance with Table 3-5, with one ground wire placed in each interstice and covered with a jacket which meets the requirements of 3.21. The cables shall be in accordance with Table 3-18.

### 3.10 TYPE SH, SHC-GC, SHD, SHD-GC AND SHD-CGC CABLES, 25,000 VOLTS OR LESS AT 100 PERCENT INSULATION LEVEL ONLY

#### 3.10.1 Single Conductor Type SH Cables, 2001–5000 Volts

These cables shall be covered with an insulation in accordance with 3.15, a tape (see 3.17), a metallic shield which meets the requirements of 3.19, with or without a non-conducting tape over the shield, and a jacket which meets the requirements of 3.21. The cables shall be in accordance with Table 3-19.

#### 3.10.2 Three-Conductor Type SHC-GC Cables, 2000 Volts Or Less

These cables shall consist of three power conductors which are separately covered with insulation meeting the requirements of 3.15 and may have an additional covering (see 3.17). The power conductors, together with two

Copyright National Electrical Manufacturers Association
Provided by IHS under license with NEMA
No reproduction or networking permitted without license from IHS
Not for Resale

grounding conductors (see 3.13), one ground check conductor (see 3.12), and any necessary fillers, shall be cabled with a left-hand lay in accordance with Table 3-5. The ground check conductor shall be laid between the black and white power conductors. The assembly shall be covered with a shield which meets the requirements of 3.19. The overall shield shall maintain contact with the two grounding conductors. A nonconducting tape may be placed over the shield. A jacket which meets the requirements of 3.21 shall be placed over the completed assembly. These cables shall be in accordance with Table 3-20.

### 3.10.3 Three-Conductor Type SHD Cables

#### 3.10.3.1 TYPE SHD THREE-CONDUCTOR CABLES, 25000 VOLTS OR LESS

These cables shall consist of three power conductors which are separately covered with insulation in accordance with 3.15, a tape (see 3.17) and a shield which meets the requirements of 3.19, and three grounding conductors (see Table 3-24), one in each interstice.

All power and grounding conductors and any necessary fillers shall be cabled together with a left-hand lay in accordance with Table 3-5 and covered with a jacket which meets the requirements of 3.21. These cables shall be in accordance with Table 3-21.

#### 3.10.3.2 TYPE SHD-GC THREE-CONDUCTOR CABLES, 25000 VOLTS OR LESS

These cables shall consist of three power conductors which are separately covered with insulation in accordance with 3.15, a tape (see 3.17) and a shield which meets the requirements of 3.19, and two grounding conductors (see Table 3-24) and one ground check conductor (see 3.12.1).

All power conductors, grounding conductors, the ground check conductor and any necessary fillers shall be cabled with a left-hand lay in accordance with Table 3-5 and covered with a jacket which meets the requirements of 3.21. The ground check conductor shall be laid between the black and white power conductors. These cables shall be in accordance with Table 3-21.

#### 3.10.3.3 TYPE SHD-CGC THREE-CONDUCTOR CABLES, 2000 VOLTS OR LESS

These cables shall consist of three power conductors which are separately covered with insulation in accordance with 3.15, a tape (see 3.17) and metal shield which meets the requirements of 3.19, three grounding conductors (see Table 3-22), and one center ground-check conductor (see 3.12.2).

All power and grounding conductors, and any necessary fillers shall be assembled with a left-hand lay in accordance with Table 3-5 and covered with a jacket which meets the requirements of 3.21. A ground check conductor shall be laid in the center of the assembly with one grounding conductor in each of the outer three interstices. These cables shall be in accordance with Table 3-22.

## 3.11 POWER CONDUCTORS

Power conductors shall be made of annealed coated or uncoated copper wires. The minimum number of wires for each particular size shall comply with Table 3-24. The dc resistance shall comply with Table 2-3.

A separator over the conductor may be used for cables rated 2000 volts or less.

On cables rated above 2000 volts, a stress control layer in accordance with 3.14 shall be applied over the conductor.

## 3.12 CONTROL AND GROUND-CHECK CONDUCTORS

**3.12.1** The control conductors for Type PCG cables shall not be smaller than 10 AWG. The ground check conductor for Type G-GC, SHC-GC and SHD-GC shall be as given in Tables 3-12A, 3-14, 3-20 and 3-21. A minimum of 49 strands of annealed coated or uncoated copper wire shall be used. If a larger size ground-check conductor is utilized, the minimum number of wires shall not be less than specified for a power conductor of the same size (see Table 3-24). A separator may be used between the conductor and insulation.

### 3.12.2 Center Ground-Check

The center ground check conductor for Type G-CGC and SHD-CGC shall contain a minimum of 28 strands of annealed coated or uncoated copper laid around a core of nonmetallic material. The cross-sectional area of the conductor shall not be less than 1800 circular mils.

### 3.12.3 Ground Check Wire for Flat G-GC

The ground check conductor for flat G-GC shall be at least a No. 8 AWG annealed copper wire and shall be flat, rectangular or oval in shape, with a minimum average wall of .045" of insulation.

## 3.13 GROUNDING CONDUCTORS

**3.13.1** The grounding conductors for two-, three- and four-conductor round Type G, SHC-GC, SHD, SHD-GC and SHD-CGC shall be annealed copper

**3.13.1.1** The size and number of wires for grounding conductors in round Type G, SHC-GC, SHD, and SHD-GC shall be in accordance with Table 3-24

**3.13.1.2** The size and number of wires for grounding conductors in Type SHD-CGC shall be in accordance with Table 3-22

**3.13.2** The single grounding conductor for flat, twin Type G cables shall be flat, rectangular, or oval in shape, composed of either coated or uncoated copper and shall have a minimum cross-sectional area of 50 percent of the

Copyright National Electrical Manufacturers Association
Provided by IHS under license with NEMA
No reproduction or networking permitted without license from IHS

Not for Resale

power conductor but not less than the cross-sectional area of a No. 8 AWG conductor as given in Table 3-7. The grounding conductor wires shall meet the requirements of 3.11.

**3.13.3** The two grounding conductors for flat, three-conductor Type G cables shall be flat, rectangular, or oval in shape, composed of either coated or uncoated copper and of the size given in Table 3-11. The grounding conductor wires shall meet the requirements of 3.11.

**3.13.4** The grounding conductors for three-conductor round Type G-GC and G-CGC shall meet the requirements of 3.11 and shall be of the size and stranding given in Table 3-12 and 3-12A, respectively.

**3.13.5** The grounding conductors for flat, three-conductor Type G-GC cables shall be flat, rectangular, or oval in shape, composed of either coated or uncoated copper and of the size given in Table 3-13. The grounding conductor wires shall meet the requirements of 3.11.

**3.13.6** The single grounding conductor for five-conductor Type G and for Type PG and PCG cables shall meet the requirements of 3.11 and shall be of the size and stranding given in Tables 3-15, 3-16, and 3-17 respectively.

**3.13.7** The grounding conductors for Types G, G-GC, G-CGC, PG, PCG cables may be covered or uncovered. The grounding conductors for Types SHC-GC, SHD-GC, and SHD-CGC shall be uncovered. When used, the outer covering over the grounding conductor shall be green in color and may be in the form of an extruded layer, braid, tape or other suitable means.

## 3.14 STRESS CONTROL LAYER (CONDUCTOR SHIELD)

Conductors to be insulated for a rated circuit voltage above 2000 volts shall be covered with a separate stress controlling material compatible with the conductor and the insulation. The material shall have allowable operating temperatures at least equal to those given for the insulation.

**3.14.1** The stress control layer shall be a polymeric covering consisting of a conducting tape, extruded material or extruded material over conducting tape. The layer shall have a minimum thickness of 0.0025 inches.

**3.14.2** Extrudable material, prior to application to the conductor, when tested in accordance with 6.11, shall meet the following requirements:

| | |
|---|---|
| Elongation after air oven test at 121°C ± 1°C for 168 hrs. minimum percent | 100 |
| Brittleness temperature not warmer than deg. C | -10 |

**3.14.2.1** The resistivity of an extruded conducting material when measured according to 6.19, shall not exceed 1000 ohm-meter at room temperature and at the maximum normal operating temperature of the cable.

**3.14.2.2** An extruded, nonconducting stress-controlling materials, when measured according to 6.25, shall meet the following requirements at room temperature and at the maximum normal operating temperature of the cable:

| | |
|---|---|
| Permittivity (SIC) range | 10-1000 |
| 60 Hz ac voltage withstand stress, volts per mil, minimum | 1500/permittivity |

This material is only applicable for conductors having ethylene propylene insulation.

## 3.15 POWER CONDUCTOR INSULATION

**3.15.1** The insulation for the power conductor shall meet the requirements given in Tables 3-1. The average thickness shall not be less than specified in Tables 3-6 through 3-22 and 3-25. The minimum thickness shall not be less than 90 percent of the specified value. The highest rated circuit voltage specified in these tables represents the maximum operating voltage recommended for the given insulation thickness.

**3.15.2** Type SHD and SHD-GC cables, employing EP insulation for cables rated 8-25kV inclusive, may have an optional extruded conducting layer applied over the insulation.

When an extruded conductor layer is employed, the average insulation thickness, and the sum of the average insulation thickness plus the average extruded conducting layer thickness, shall be not less than the values given below:

| Voltage Rating, kV | Thickness, inch | |
|---|---|---|
| | EP Insulation | EP Insulation plus Extruded Conducting Layer |
| 8 | 0.115 | 0.150 |
| 15 | 0.175 | 0.210 |
| 25 | 0.260 | 0.295 |

The minimum insulation thickness shall be not less than 90 percent of the specified values. The minimum thickness of the insulation, plus the thickness of the extruded conducting layer at the same point, shall be not less than 90 percent of the specified value.

The extruded crosslinked, conducting layer shall meet the requirements of 4.5.1. The tension necessary to remove the extruded conducting layer from cable at room temperature shall be not less than 3 lbs. (see 6.20).

A conducting tape shall be applied over the extruded conducting layer. The extruded conducting layer and the conducting tape shall be plainly identified as being conducting (see 3.17).

Copyright National Electrical Manufacturers Association
Provided by IHS under license with NEMA
No reproduction or networking permitted without license from IHS

Not for Resale

### 3.16 GROUND CHECK AND CONTROL CONDUCTOR INSULATION

The insulation for the ground check and control conductors shall be one of the types given in Table 3-2 and shall meet the requirements specified in Table 3-2. The average thickness shall not be less than 0.030 inches for sizes 10 AWG and smaller and shall not be less than 0.045 inches for sizes 8 AWG and larger. The minimum thickness at any point shall not be less than 90% of the specified average value.

### 3.17 TAPES AND BRAIDS

#### 3.17.1 Power Conductors

#### 3.17.1.1 NONSHIELDED CABLES

**Cables (2000 Volts or less).** Colored insulation may be used for circuit identification. If colored insulation is not used, a colored tape or braid or other suitable means of identification shall be used.

**Type G Cables (2001 to 5000 Volts).** A color coded nonconducting tape shall be used over each insulated conductor.

#### 3.17.1.2 SHIELDED CABLES

**Type SHC-GC (2000 Volts or less).** Colored insulation may be used for circuit identification. If colored insulation is not used, a colored tape or braid or other suitable means of surface identification shall be used.

**Types SH, SHD, SHD-GC, and SHD-CGC Cables (25000 Volts or less).** A tape shall be used over the insulation. If a conducting tape is used, it shall be plainly identified as being conducting. For cables rated 5001 volts and higher, the tape shall be conducting.

#### 3.17.2 Ground Check and Control Conductors

Colored insulation may be used as identification for ground check and control conductors. If colored insulation is not used, a colored tape or braid or other suitable means of identification shall be used.

### 3.18 CONDUCTOR IDENTIFICATION

Identification shall be any suitable means in accordance with the color sequence given in 3.18.1 and 3.18.2

#### 3.18.1 Power Conductors.

Two-Conductor cables
All types ..... black, white
Three-Conductor cables
Type G (round and flat),
PG, PCG, G-GC, G-CGC, SHC*,
SHC-GC*, SHD-GC*, SHD-CGC*, and
SHD* ..... black, white, red
Type W..... black, white, green
Four-Conductor cables
Type G..... black, white, red, orange
Type W ..... black, white, red, green
Five-Conductor cables
Type G..... black, white, red, orange, blue
Type W ..... black, white, red, green, orange
Six-Conductor cables
Type W ..... black, white, red, green, orange, blue

* If conducting nonmetallic tapes are used, identification may be by means of stripes or printing in a contrasting color.

A narrow colored strip paralleled under the metallic shield may also be used as a method of conductor identification.

#### 3.18.2 Control and Ground Check Conductors

Control conductors,
Type PCG ..... black, white
Ground check conductor,
Type G-GC, G-CGC (round or flat),
SHD-GC,
SHD-CGC and
SHD-GC ..... yellow

### 3.19 SHIELDING

**3.19.1** The shielding for Types SH, SHD, SHC-GC, SHD-GC and SHD-CGC cables shall consist of metallic, nonmagnetic wires in the form of an all metallic braid, a metallic serving or wrap or a composite copper/fiber braid.

If copper or copper alloy wires are used, they shall be coated. (See paragraph 2.1.1.2)

#### 3.19.1.1 METALLIC BRAID SHIELDS

If shielding is applied in the form of a metal braid, the coverage shall be not less than 84 percent as determined by the following formula:

Percent coverage = $100 (2F - F^2)$

Where:

$F = N P d/\sin \alpha$

$\alpha$ = Angle of braid with axis of cable

$\alpha = \text{Tan}^{-1} [2 \pi DP/C]$

d = Diameter of individual braid wires in inches

C = Number of carriers

D = Diameter under shield in inches

N = Number of wires per carrier

P = Picks per inch

#### 3.19.1.2 Metal Wire Shields

If the shielding is applied in the form of a serving or wrap, the coverage shall be not less that 60 percent as determined by the following formula:

Percent coverage = $Nd/W \times 100$

Where:

N = Number of parallel wires

d = Diameter of individual wires in inches

Copyright National Electrical Manufacturers Association
Provided by IHS under license with NEMA
No reproduction or networking permitted without license from IHS
Not for Resale

**Table 3-1**
**POWER CONDUCTOR INSULATION REQUIREMENTS**

| | Ethylene Propylene | | | Crosslinked Polyethylene | |
|---|---|---|---|---|---|
| | Type I | Type II | | | |
| | | Up to 2kV | Above 2kV | Up to 2kV | Above 2kV |
| Initial Physical Properties | | | | | |
| Tensile Strength, min., psi | 700 | 1200 | 1200 | 1800 | 1800 |
| Tensile Stress @ 100% of Elongation, min., psi | --- | 500 | 500 | --- | --- |
| Elongation at Rupture, min., % | 250 | 150 | 150 | 250 | 250 |
| Air Oven Aging | | | | | |
| After Conditioning @ 121°C ± 1°C for 168 hours | | | | | |
| Tensile Strength & Elongation, min., percentage of Unaged value | 75 | 75 | 75 | 75 | 75 |
| Accelerated Water Absorption | | | | | |
| Dielectric Constant after 24 hours, max | 4.0 | 6.0 | 4.0 | 6.0 | 3.5 |
| Increase in Capacitance maximum, percent | | | | | |
| 1–14 days | 3.5 | 5.0 | 3.5 | 3.0 | 3.0 |
| 7–14 days | 1.5 | 3.0 | 1.5 | 1.5 | 1.5 |
| *Stab. Factor after 14 days | 1.0 | 2.0 | 1.0 | 1.0 | 1.0 |
| or | | | | | |
| *Alternate to Stability Factor (Stability Factor Difference) 1–14 days max. | 0.5 | --- | 0.5 | 0.5 | 0.5 |
| Insulation Resistance | | | | | |
| IR K @ 15.6°C, min., megohms—1,000 feet | 20,000 | 10,000 | 20,000 | 10,000 | 20,000 |
| Additional Requirements | | | | | |
| **Power Factor max., % after 24 hours | 2.0 | --- | 2.0 | --- | 2.0 |
| **Permittivity (SIC) | 4.0 | --- | 4.0 | --- | 3.5 |
| Hot Creep (ICEA T-28-562) | | | | | |
| After Conditioning @ 150°C ± 2°C. | | | | | |
| | | | | All Voltages | |
| | | | | ***Unfilled | ***Filled |
| Elongation, max., % | 50 | 50 | 50 | 175 | 100 |
| Set, max., % | 5 | 5 | 5 | 10 | 5 |

* Only one of these two requirements needs to be satisfied, not both.

** Applies only to cables rated 5001 volts and above.

*** If this value is exceeded, the solvent extraction test may be performed and will serve as a referee method to determine compliance. Requirement shall be 30 percent maximum extractibles after 20 hours drying.

Copyright National Electrical Manufacturers Association
Provided by IHS under license with NEMA
No reproduction or networking permitted without license from IHS

Not for Resale

Table 3-2
GROUND-CHECK AND CONTROL CONDUCTOR INSULATION REQUIREMENTS

| | Crosslinked | | | | | | Thermoplastic | |
|---|---|---|---|---|---|---|---|---|
| | Ethylene Propylene Type I | Ethylene Propylene Type II | Crosslinked Polyethylene | Chlorinated Polyethylene | Chlorosulfonated Polyethylene | Neoprene | Thermoplastic Elastomer | Polypropylene |
| Initial Physical Properties | | | | | | | | |
| At Room Temperature | | | | | | | | |
| Tensile Strength, minimum, psi | 700 | 1200 | 1800 | 1500 | 1500 | 1200 | 1500 | 3000 |
| Tensile Stress @ 100% elongation, minimum, psi | - | 500 | - | - | - | - | - | 2500 |
| Elongation at Rupture, minimum, percent | 250 | 150 | 250 | 300 | 300 | 300 | 300 | 300 |
| Set, maximum, percent | - | - | - | 30 | 30 | 30 | - | - |
| Air Oven Aging Requirements | | | | | | | | |
| After Conditioning @ °C | 121 | 121 | 121 | 121 | 121 | 100 | 121 | 100 |
| ± 1°C hours | 168 | 168 | 168 | 168 | 168 | 168 | 168 | 48 |
| Minimum percent retention of original value | | | | | | | | |
| Tensile strength | 75 | 75 | 75 | 85 | 85 | 60 | 75 | 75 |
| Elongation | 75 | 75 | 75 | 55 | 50 | 60 | 75 | 75 |

$W = \pi D \cos \alpha$

D = Diameter under shield in inches

a = Angle between serving wires and axis of cable

$\text{Tan } \alpha = \pi D/C$

C = Pitch of serving in inches

## 3.20 CONDUCTOR ASSEMBLY

For round cables, the insulated conductors, together with grounding conductors and any necessary fillers, shall be cabled with a left-hand lay. For Type SHD, SHD-GC, and SHD-CGC cables, the grounding conductors shall be in contact with the metallic shields. A binder tape and/or threads may be used over the assembly. The maximum length of lay shall be in accordance with Table 3-5.

## 3.21 JACKETS

### 3.21.1 Duty Rating

Jackets shall be heavy-duty or extra-heavy-duty crosslinked compounds. Extra-heavy-duty jackets are required for cables having a nominal outside diameter of more than 2.00 inches and for all shielded cables and single-conductor hard-service cables.

### 3.21.2 General

The jacket shall be applied in one or two layers. If applied in two layers, the outer jacket shall constitute at least 50 percent of the total thickness of jacket. The single layer jacket and the outer layer of a two layer jacket shall meet the appropriate requirements in Table 3-3 and 3-4 when tested in accordance with test methods described in Section 6.

Single or two-layer jackets shall be reinforced by use of an appropriate tape, or two servings or a braid of a suitable natural or synthetic material. The diameter of the reinforcing material shall not be greater than 0.035 inches. If two servings are used, they shall be applied in opposite directions of lay. The reinforcing shall be under the single-layer jacket and between the layers of the two-layer construction.

On flat cables, the reinforcing serving or braid shall be applied to each individual conductor or over the assembly.

### 3.21.3 Thickness of Jacket

The average thickness of the jacket shall be not less than that given in Tables 3-18 through 3-22. The minimum thickness shall be not less than 80 percent of the values given in the tables. The reinforcing specified in 3.21.2 shall be included in the measurement of the jacket thickness. The thickness of jackets for portable cables not covered by Tables 3-6 through 3-22 and 3-25 shall be in accordance with Table 3-23. Jacket thicknesses in Tables 3-6 through 3-7 shall be such as to obtain the specified outside cable diameter.

### 3.21.4 Repairs

The jacket may be repaired in accordance with good commercial practice. Cables with repaired jackets must be capable of meeting all applicable requirements of this standard.

Copyright National Electrical Manufacturers Association
Provided by IHS under license with NEMA
No reproduction or networking permitted without license from IHS
Not for Resale

## 3.22 COMPLETED CABLE

### 3.22.1 Outside Diameters

Nominal outside diameters of the completed cable shall be in accordance with Tables 3-6 through 3-22 and 3-25.

### 3.22.2 Diameter Tolerances

The tolerance for outside diameter shall be plus 8 percent and minus 5 percent, except for 2000 volts or less flat twin cables, the tolerance shall be ± .04 inch for the major and ±.03 inch for the minor diameter. For 2000 volts or less, flat three- or four-conductor cables, the tolerance shall be ±.08 inch for the major and ±.05 inch for the minor diameter. For 2000 volts or less shielded cables, the tolerance shall be 5%. For all other 2000 volts or less nonshielded cables, the tolerances shall be as follows:

| Size, AWG or kcmil | Outside Diameter Tolerances, Plus and Minus, Inches |
|---|---|
| 8 - 1 | 0.03 |
| 1/0 - 2/0 | 0.04 |
| 3/0 - 4/0 | 0.05 |
| 250 - 1000 | 0.06 |

### 3.22.3 Marking

The cable shall be identified throughout its length to indicate the manufacturer.

### 3.22.4 Tests

The cable shall be tested in accordance with Section 6 and shall meet the requirements specified in this standard.

**3.22.4.1** Completed nonshielded cable shall withstand for 5 minutes, after six hours immersion in water, either the alternating current test voltage or the direct current test voltage specified in Tables 3-6 through 3-18.

**3.22.4.2** Completed shielded cable rated 5kV or less shall withstand for 5 minutes, without immersion in water, the alternating current test voltage or the direct current test voltage (when given) specified in Table 3-19, 3-20, 3-21 and 3-22 and 3-25.

**3.22.4.3** Completed shielded cable rated above 5 kV shall withstand, without immersion in water, the alternating current test voltage specified in Table 3-19 and 3-21 for 5 minutes, and the direct current test voltage specified in Table 3-19 and 3-21 for 15 minutes.

**3.22.4.4** The power conductors in a completed cable shall comply with the requirements for insulation resistance after the high voltage ac tests and before any dc voltage test.

When a nonconducting separator is applied between the conductor and insulation, and for jacketed nonshielded cables, the insulation resistance shall not be less than 60% of the required 15.6°C value based on the actual insulation thickness and insulation resistance constant given in Table 3-1.

**3.22.4.5** Each insulated ground check or control conductor shall withstand, prior to assembly, either the ac or dc spark test voltages or the ac or dc test voltages, applied for 5 minutes after 6 hours immersion in water. The test voltages shall be as listed in the following table.

| Insulation Thickness, inches | ac Test Voltage, kV | dc Test Voltage kV | ac Spark Test Voltage, kV | dc Spark Test Voltage, kV |
|---|---|---|---|---|
| **Chlorosulfonated Polyethylene, Chlorinated Polyethylene, and Neoprene** | | | | |
| .030 | 3.0 | 9.0 | 7.5 | 9.0 |
| .045 | 3.5 | 10.5 | 9.0 | 10.5 |
| **Ethylene Propylene, Crosslinked Polyethylene, Thermoplastic Elastomer, and Polypropylene** | | | | |
| .030 | 3.5 | 10.5 | 7.5 | 10.5 |
| .045 | 5.5 | 16.5 | 10.0 | 16.5 |

Copyright National Electrical Manufacturers Association
Provided by IHS under license with NEMA
No reproduction or networking permitted without license from IHS
Not for Resale

A voltage test on the insulated ground check conductor in the completed cable shall be made between the ground check conductor and the grounding conductors by applying an alternating current voltage of 3.0 kV for 15 seconds. The insulation resistance test is not required.

## 3.23 THREE CONDUCTOR TYPE SHD-PCG, 5000 VOLTS OR LESS AT 100 PERCENT INSULATION LEVEL ONLY

These cables shall consists of three power conductors (see 3.11,) which are separately covered with insulation meeting the requirements of 3.15, a tape (see 3.17) and a metallic shield which meets the requirements of 3.19, a grounding conductor (see Table 3-25) and a group of control conductors under a unit jacket. These cables shall be in accordance with Table 3-25.

All power conductors, the unit of control conductors and any necessary fillers shall be cabled around the grounding conductor with a left-hand lay, in accordance with the four conductor lay length in Table 3-5.

The jacketed unit of control conductors shall be laid between the black and red power conductors. The cable shall be covered with a jacket which meets the requirements of 3.21. These cables shall comply with the requirements of SHD-GC cables unless otherwise specified in 3.23 and Table 3-25.

### 3.23.1 Control Conductors for Type SHD-PCG Cable

The control conductor shall not be smaller than 10 AWG. A minimum of 49 stands of annealed coated or uncoated copper wire shall be used. If a larger size control conductor is utilized, the number of strands shall not be less than specified for a power conductor of the same size (see Table 3-24).

### 3.23.2 Grounding Conductor for Type SHD-PCG

The grounding conductor for Type SHD-PCG cable shall be coated annealed copper and shall be uncovered. The size and number of strands for the grounding conductor shall be in accordance with Table 3-25.

### 3.23.3 Control Conductor Insulation, Assembly, and Unit Covering

**3.23.3.1** The insulation for the control conductors shall be one of the types given in Table 3-2 and shall meet the requirements specified in Table 3-2. The average thickness shall be not less than 0.030 inches for sizes 10 AWG and shall not be less than 0.045 inches for sizes 8 AWG and larger. The minimum thickness at any point shall not be less than 90% of the specified average value. A separator may be used between the conductor and insulation.

**3.23.3.2** The 2, 3, or 4 control conductors shall be cabled with a left-hand lay, with any necessary fillers, in accordance with Table 3-5.

The color coding shall be as follows:

| No. of Conductors | Colors |
|---|---|
| 2 | Black, White |
| 3 | Black, White, Red |
| 4 | Black, White, Red, Blue |

When only one control conductor is required, the insulation may be applied in two layers. The color yellow shall be used on the outer layer by any suitable means. The diameter of the control unit shall be approximately equal to the nominal diameter of an insulated and shielded power conductor.

**3.23.3.3** The unit jacket for the control conductors shall be one of the types given in Table 3-4. The diameter of the control unit shall be approximately equal to the nominal diameter of an insulated and shielded power conductor.

Copyright National Electrical Manufacturers Association
Provided by IHS under license with NEMA
No reproduction or networking permitted without license from IHS
Not for Resale

**Table 3-3**
**EXTRA HEAVY DUTY CROSSLINKED JACKETS**

| | Chlorinated Polyethylene | Neoprene | Nitrile butadiene/-polyvinyl-chloride | Chlorosulfonated Polyethylene* |
|---|---|---|---|---|
| PHYSICAL REQUIREMENTS | | | | |
| Tensile strength, minimum psi..... | 2400 | 2400 | 2400 | 2400 |
| Tensile stress at 200 percent elongation, minimum psi ..... | 700 | 700 | 700 | 700 |
| Elongation at rupture, minimum, percent..... | 300 | 300 | 300 | 300 |
| Set, maximum, percent ..... | 30 | 20 | 30 | 30 |
| Tear resistance, minimum pounds per inch..... | 40 | 40 | 40 | 40 |
| AGING REQUIREMENTS | | | | |
| After air oven test at 100°C ± 1°C for 168 hours ..... | | | | |
| Tensile strength, minimum, percentage of unaged value ..... | 70 | 50 | 50 | 70 |
| Elongation at rupture, minimum percentage of unaged valve ..... | 55 | 50 | 50 | 60 |
| After oil immersion test at 121°C ± 1°C for 18 hours..... | | | | |
| Tensile strength and elongation, minimum, percentage of unaged value..... | 60 | 60 | 60 | 60 |
| ELECTRICAL REQUIREMENTS | | | | |
| Surface resistance, nonshielded cables minimum, megohms ..... | 100 | 100 | 100 | 100 |

* Also known as Chlorosulfonyl Polyethylene

Copyright National Electrical Manufacturers Association
Provided by IHS under license with NEMA
No reproduction or networking permitted without license from IHS
Not for Resale

**Table 3-4**
**HEAVY DUTY CROSSLINKED JACKETS**

| | Chlorinated Polyethylene | Neoprene | Nitrile butadiene/-polyvinyl-chloride | Chlorosulfonated Polyethylene* |
|---|---|---|---|---|
| PHYSICAL REQUIREMENTS | | | | |
| Tensile strength, minimum psi..... | 1800 | 1800 | 1800 | 1800 |
| Tensile stress at 200 percent elongation, minimum psi ..... | 500 | 500 | 500 | 500 |
| Elongation at rupture, minimum, percent..... | 300 | 300 | 300 | 300 |
| Set, maximum, percent ..... | 30 | 20 | 30 | 30 |
| AGING REQUIREMENTS | | | | |
| After air oven test at 100°C ± 1°C for 168 hours ..... | | | | |
| Tensile strength, minimum, percentage of unaged value ..... | 85 | 50 | 50 | 85 |
| Elongation at rupture, minimum percentage of unaged value..... | 55 | 50 | 50 | 65 |
| After oil immersion test at 121°C ± 1°C for 18 hours..... | | | | |
| Tensile strength and elongation, minimum, percentage of unaged value..... | 60 | 60 | 60 | 60 |
| ELECTRICAL REQUIREMENTS | | | | |
| Surface resistance, nonshielded cables minimum, megohms ..... | 100 | 100 | 100 | 100 |

* Also known as Chlorosulfonyl Polyethylene

Copyright National Electrical Manufacturers Association
Provided by IHS under license with NEMA
No reproduction or networking permitted without license from IHS

Not for Resale

**Table 3-5**
**MAXIMUM LENGTH OF LAY**

| Number of Power Conductors | Factors for Maximum Length of Lay* |
|---|---|
| 2 | 20 x d |
| 3 | 21 x d |
| 4 | 23 x d |
| 5 | 27 x d |
| 6 | 30 x d |

*d = diameter of individual power conductor.

**Table 3-6**
**2000 VOLTS OR LESS**
**SINGLE CONDUCTOR PORTABLE POWER CABLE**

| Power Conductor Size, AWG or kcmil* | Insulation Thickness, inches | Normal Service, inches | Hard Service, inches | Test Voltage, kV | |
|---|---|---|---|---|---|
| | | | | ac | dc |
| 8 | .060 | 0.44 | 0.51 | 7.0 | 21.0 |
| 6 | .060 | 0.51 | 0.59 | 7.0 | 21.0 |
| 4 | .060 | 0.57 | 0.64 | 7.0 | 21.0 |
| 3 | .060 | 0.63 | 0.68 | 7.0 | 21.0 |
| 2 | .060 | 0.66 | 0.71 | 7.0 | 21.0 |
| 1 | .080 | 0.74 | 0.82 | 8.0 | 24.0 |
| 1/0 | .080 | 0.77 | 0.87 | 8.0 | 24.0 |
| 2/0 | .080 | 0.82 | 0.95 | 8.0 | 24.0 |
| 3/0 | .080 | 0.87 | 1.04 | 8.0 | 24.0 |
| 4/0 | .080 | 0.93 | 1.11 | 8.0 | 24.0 |
| 250 | .095 | 1.03 | 1.18 | 9.5 | 28.5 |
| 300 | .095 | 1.09 | 1.25 | 9.5 | 28.5 |
| 350 | .095 | 1.15 | 1.30 | 9.5 | 28.5 |
| 400 | .095 | 1.20 | 1.36 | 9.5 | 28.5 |
| 450 | .095 | 1.26 | 1.41 | 9.5 | 28.5 |
| 500 | .095 | 1.31 | 1.45 | 9.5 | 28.5 |
| 550 | .110 | 1.42 | ... | 11.5 | 34.5 |
| 600 | .110 | 1.46 | ... | 11.5 | 34.5 |
| 650 | .110 | 1.50 | ... | 11.5 | 34.5 |
| 700 | .110 | 1.54 | ... | 11.5 | 34.5 |
| 750 | .110 | 1.58 | ... | 11.5 | 34.5 |
| 800 | .110 | 1.62 | ... | 11.5 | 34.5 |
| 900 | .110 | 1.69 | ... | 11.5 | 34.5 |
| 1000 | .110 | 1.76 | ... | 11.5 | 34.5 |

*See Table 3-24

Copyright National Electrical Manufacturers Association
Provided by IHS under license with NEMA
No reproduction or networking permitted without license from IHS

Not for Resale

**Table 3-7**
**TYPE W AND G TWO-CONDUCTOR FLAT TWIN PORTABLE POWER CABLES**

| Power Conductor Size, AWG or kcmil** | Power Conductor Insulation Thickness, inches | Grounding Conductor Size, AWG** | Outside Diameter | | Test Voltage, kV | |
|---|---|---|---|---|---|---|
| | | | Minor, inches | Major, inches | ac | dc |
| **Type W (Without Grounding Conductor)** | | | | | | |
| 8 | .060 | ... | 0.51 | 0.84 | 7.0 | 21.0 |
| 6 | .060 | ... | 0.56 | 0.93 | 7.0 | 21.0 |
| 4 | .060 | ... | 0.61 | 1.05 | 7.0 | 21.0 |
| 3 | .060 | ... | 0.68 | 1.14 | 7.0 | 21.0 |
| 2 | .060 | ... | 0.73 | 1.24 | 7.0 | 21.0 |
| 1 | .080 | ... | 0.81 | 1.40 | 8.0 | 24.0 |
| 1/0 | .080 | ... | 0.93 | 1.51 | 8.0 | 24.0 |
| 2/0 | .080 | ... | 0.99 | 1.63 | 8.0 | 24.0 |
| 3/0 | .080 | ... | 1.03 | 1.77 | 8.0 | 24.0 |
| 4/0 | .080 | ... | 1.10 | 1.89 | 8.0 | 24.0 |
| **Type G (With Grounding Conductor)** | | | | | | |
| 6 | .060 | 8 | 0.56 | 1.02 | 7.0 | 21.0 |
| 4 | .060 | 7 | 0.61 | 1.15 | 7.0 | 21.0 |
| 3 | .060 | 6 | 0.68 | 1.26 | 7.0 | 21.0 |
| 2 | .060 | 5 | 0.73 | 1.35 | 7.0 | 21.0 |
| 1 | .080 | 4 | 0.81 | 1.55 | 8.0 | 24.0 |
| 1/0 | .080 | 3 | 0.93 | 1.67 | 8.0 | 24.0 |
| 2/0 | .080 | 2 | 0.99 | 1.85 | 8.0 | 24.0 |
| 3/0 | .080 | 1 | 1.03 | 2.00 | 8.0 | 24.0 |
| 4/0 | .080 | 1/0 | 1.10 | 2.10* | 8.0 | 24.0 |

* This cable requires extra-heavy-duty jackets (see 3.21)
** See Table 3-24

Copyright National Electrical Manufacturers Association
Provided by IHS under license with NEMA
No reproduction or networking permitted without license from IHS
Not for Resale

**Table 3-8**
**2000 VOLTS OR LESS**
**TYPE W AND G TWO-CONDUCTOR ROUND PORTABLE POWER CABLES**

| Power Conductor Size, AWG or kcmil** | Insulation Thickness, inches | Outside Diameter, inches | Test Voltage, kV | |
|---|---|---|---|---|
| | | | ac | dc |
| 8 | .060 | 0.81 | 7.0 | 21.0 |
| 6 | .060 | 0.93 | 7.0 | 21.0 |
| 4 | .060 | 1.08 | 7.0 | 21.0 |
| 3 | .060 | 1.17 | 7.0 | 21.0 |
| 2 | .060 | 1.27 | 7.0 | 21.0 |
| 1 | .080 | 1.44 | 8.0 | 24.0 |
| 1/0 | .080 | 1.52 | 8.0 | 24.0 |
| 2/0 | .080 | 1.65 | 8.0 | 24.0 |
| 3/0 | .080 | 1.77 | 8.0 | 24.0 |
| 4/0 | .080 | 1.92 | 8.0 | 24.0 |
| 250 | .095 | 2.10* | 9.5 | 28.5 |
| 300 | .095 | 2.22* | 9.5 | 28.5 |
| 350 | .095 | 2.36* | 9.5 | 28.5 |
| 400 | .095 | 2.47* | 9.5 | 28.5 |
| 450 | .095 | 2.60* | 9.5 | 28.5 |
| 500 | .095 | 2.70* | 9.5 | 28.5 |

* This cable requires extra-heavy-duty jackets (see 3.21)
** See Table 3-24

Copyright National Electrical Manufacturers Association
Provided by IHS under license with NEMA
No reproduction or networking permitted without license from IHS
Not for Resale

**Table 3-9**
**2000 VOLTS OR LESS**
**TYPE W AND G THREE-CONDUCTOR ROUND PORTABLE POWER CABLES**

| Power Conductor Size, AWG or kcmil** | Insulation Thickness, inches | Outside Diameter, inches | Test Voltage, kV | |
|---|---|---|---|---|
| | | | ac | dc |
| 8 | .060 | 0.91 | 7.0 | 21.0 |
| 6 | .060 | 1.01 | 7.0 | 21.0 |
| 4 | .060 | 1.17 | 7.0 | 21.0 |
| 3 | .060 | 1.24 | 7.0 | 21.0 |
| 2 | .060 | 1.34 | 7.0 | 21.0 |
| 1 | .080 | 1.51 | 8.0 | 24.0 |
| 1/0 | .080 | 1.65 | 8.0 | 24.0 |
| 2/0 | .080 | 1.75 | 8.0 | 24.0 |
| 3/0 | .080 | 1.89 | 8.0 | 24.0 |
| 4/0 | .080 | 2.04* | 8.0 | 24.0 |
| 250 | .095 | 2.39* | 9.5 | 28.5 |
| 300 | .095 | 2.56* | 9.5 | 28.5 |
| 350 | .095 | 2.68* | 9.5 | 28.5 |
| 400 | .095 | 2.82* | 9.5 | 28.5 |
| 450 | .095 | 2.94* | 9.5 | 28.5 |
| 500 | .095 | 3.03* | 9.5 | 28.5 |

* This cable requires extra-heavy-duty jackets (see 3.21)
** See Table 3-24

Copyright National Electrical Manufacturers Association
Provided by IHS under license with NEMA
No reproduction or networking permitted without license from IHS

Not for Resale

**Table 3-10**
**2000 VOLTS OR LESS**
**TYPE W AND G FOUR-CONDUCTOR ROUND PORTABLE POWER CABLES**

| Power Conductor Size, AWG or kcmil** | Insulation Thickness, inches | Outside Diameter, inches | Test Voltage, kV | |
|---|---|---|---|---|
| | | | ac | dc |
| 8 | .060 | 0.99 | 7.0 | 21.0 |
| 6 | .060 | 1.10 | 7.0 | 21.0 |
| 4 | .060 | 1.27 | 7.0 | 21.0 |
| 3 | .060 | 1.34 | 7.0 | 21.0 |
| 2 | .060 | 1.48 | 7.0 | 21.0 |
| 1 | .080 | 1.68 | 8.0 | 24.0 |
| 1/0 | .080 | 1.79 | 8.0 | 24.0 |
| 2/0 | .080 | 1.93 | 8.0 | 24.0 |
| 3/0 | .080 | 2.07* | 8.0 | 24.0 |
| 4/0 | .080 | 2.26* | 8.0 | 24.0 |
| 250 | .095 | 2.66* | 9.5 | 28.5 |
| 300 | .095 | 2.84* | 9.5 | 28.5 |
| 350 | .095 | 2.98* | 9.5 | 28.5 |
| 400 | .095 | 3.14* | 9.5 | 28.5 |
| 450 | .095 | 3.26* | 9.5 | 28.5 |
| 500 | .095 | 3.40* | 9.5 | 28.5 |

* This cable requires extra-heavy-duty jackets (see 3.21)
** See Table 3-24

Copyright National Electrical Manufacturers Association
Provided by IHS under license with NEMA
No reproduction or networking permitted without license from IHS
Not for Resale

**Table 3-11**
**2000 VOLTS OR LESS**
**TYPE G THREE-CONDUCTOR FLAT PORTABLE POWER CABLES**
**WITH TWO GROUNDING CONDUCTORS**

| Power Conductor Size, AWG** | Power Conductor Insulation Thickness inches | Grounding Conductor Size, AWG** (each) | Nominal Outside Diameter Minor, inches | Nominal Outside Diameter Major, inches | Test Voltage, kV ac | Test Voltage, kV dc |
|---|---|---|---|---|---|---|
| 6 | .060 | 8 | 0.67 | 1.65 | 7.0 | 21.0 |
| 4 | .060 | 8 | 0.75 | 1.85 | 7.0 | 21.0 |
| 3 | .060 | 7 | 0.77 | 1.99 | 7.0 | 21.0 |
| 2 | .060 | 6 | 0.81 | 2.10* | 7.0 | 21.0 |
| 1 | .080 | 5 | 0.97 | 2.43* | 8.0 | 24.0 |
| 1/0 | .080 | 4 | 1.01 | 2.61* | 8.0 | 24.0 |
| 2/0 | .080 | 3 | 1.10 | 2.86* | 8.0 | 24.0 |
| 3/0 | .080 | 2 | 1.18 | 3.12* | 8.0 | 24.0 |
| 4/0 | .080 | 1 | 1.24 | 3.30* | 8.0 | 24.0 |

* This cable requires extra-heavy-duty jackets (see 3.21)
** See Table 3-24

Copyright National Electrical Manufacturers Association
Provided by IHS under license with NEMA
No reproduction or networking permitted without license from IHS

Not for Resale

**Table 3-12**
**2000 VOLTS OR LESS**
**TYPE G-GC THREE-CONDUCTOR ROUND PORTABLE POWER CABLES**
**WITH TWO GROUNDING CONDUCTORS AND ONE GROUND-CHECK CONDUCTOR**

| Power Conductor Size, AWG or kcmil*** | Insulation Thickness, inches | Each Grounding Conductor | | Ground Check Conductor | | Outside Diameter, inches | Test Voltage, kV | |
|---|---|---|---|---|---|---|---|---|
| | | Size, AWG | Number of Wires per Conductor | Minimum Size,** AWG | Insulation Thickness, inch | | ac | dc |
| 8 | .060 | 10 | 19 | 10 | .030 | 0.97 | 7.0 | 21.0 |
| 6 | .060 | 10 | 19 | 10 | .030 | 1.05 | 7.0 | 21.0 |
| 4 | .060 | 8 | 49 | 10 | .030 | 1.19 | 7.0 | 21.0 |
| 3 | .060 | 8 | 49 | 10 | .030 | 1.25 | 7.0 | 21.0 |
| 2 | .060 | 7 | 49 | 10 | .030 | 1.34 | 7.0 | 21.0 |
| 1 | .080 | 6 | 133 | 8 | .045 | 1.51 | 8.0 | 24.0 |
| 1/0 | .080 | 5 | 133 | 8 | .045 | 1.65 | 8.0 | 24.0 |
| 2/0 | .080 | 4 | 133 | 8 | .045 | 1.75 | 8.0 | 24.0 |
| 3/0 | .080 | 3 | 133 | 8 | .045 | 1.89 | 8.0 | 24.0 |
| 4/0 | .080 | 2 | 133 | 8 | .045 | 2.04* | 8.0 | 24.0 |
| 250 | .095 | 2 | 133 | 8 | .045 | 2.39* | 9.5 | 28.5 |
| 300 | .095 | 1 | 133 | 8 | .045 | 2.56* | 9.5 | 28.5 |
| 350 | .095 | 1/0 | 259 | 8 | .045 | 2.68* | 9.5 | 28.5 |
| 400 | .095 | 1/0 | 259 | 8 | .045 | 2.82* | 9.5 | 28.5 |
| 450 | .095 | 2/0 | 259 | 8 | .045 | 2.94* | 9.5 | 28.5 |
| 500 | .095 | 2/0 | 259 | 8 | .045 | 3.03* | 9.5 | 28.5 |

* This cable requires extra-heavy-duty jackets (see 3.21)
** The ground-check conductor shall have a minimum of 49 wires.
*** See Table 3-24

Copyright National Electrical Manufacturers Association
Provided by IHS under license with NEMA
No reproduction or networking permitted without license from IHS
Not for Resale

## Table 3-12A
## 2000 VOLTS OR LESS
## TYPE G-CGC THREE-CONDUCTOR ROUND PORTABLE POWER CABLES
## WITH THREE GROUNDING CONDUCTORS AND ONE GROUND-CHECK CONDUCTOR (SEE 3.12.2)

| Power Conductor** | | Grounding Conductor | | Ground-Check, | | | |
|---|---|---|---|---|---|---|---|
| Size, AWG or kcmil | Insulation Thickness inch | Size (Each), AWG | Number of Wires, minimum | Conductor Insulation Thickness, inch | Outside Diameter, Nominal, inch | Test Voltage, kV ac | dc |
| 8 | 0.060 | 12 | 19 | 0.030 | 1.15 | 7.0 | 21.0 |
| 6 | 0.060 | 10 | 19 | 0.030 | 1.19 | 7.0 | 21.0 |
| 4 | 0.060 | 8 | 49 | 0.030 | 1.33 | 7.0 | 21.0 |
| 3 | 0.060 | 8 | 49 | 0.030 | 1.39 | 7.0 | 21.0 |
| 2 | 0.060 | 8 | 49 | 0.030 | 1.48 | 7.0 | 21.0 |
| 1 | 0.080 | 7 | 49 | 0.030 | 1.65 | 8.0 | 24.0 |
| 1/0 | 0.080 | 6 | 133 | 0.030 | 1.72 | 8.0 | 24.0 |
| 2/0 | 0.080 | 5 | 133 | 0.030 | 1.89 | 8.0 | 24.0 |
| 3/0 | 0.080 | 4 | 133 | 0.030 | 2.03* | 8.0 | 24.0 |
| 4/0 | 0.080 | 3 | 133 | 0.030 | 2.16* | 8.0 | 24.0 |
| 250 | 0.095 | 2 | 133 | 0.030 | 2.39* | 8.0 | 28.0 |
| 300 | 0.095 | 1 | 133 | 0.030 | 2.56* | 9.5 | 28.5 |
| 350 | 0.095 | 1 | 133 | 0.030 | 2.68* | 9.5 | 28.5 |
| 500 | 0.095 | 2/0 | 259 | 0.030 | 3.03* | 9.5 | 28.5 |

* These cables require extra-heavy-duty jackets (see 3.21)
** See Table 3-24.

Copyright National Electrical Manufacturers Association
Provided by IHS under license with NEMA
No reproduction or networking permitted without license from IHS

Not for Resale

## Table 3-13
## 2000 VOLTS OR LESS
## TYPE G-GC THREE-CONDUCTOR FLAT PORTABLE POWER CABLES
## WITH ONE GROUNDING CONDUCTOR AND ONE GROUND CHECK CONDUCTOR

| Power Conductor Size, AWG*** | Power Conductor Insulation Thickness, inches | mm | Grounding Conductor Size, AWG** | Ground Check Conductor, Minimum Size, AWG** | Nominal Outside Diameter Minor inches | mm | Major inches | mm | Test Voltage, kV ac | dc |
|---|---|---|---|---|---|---|---|---|---|---|
| 6 | .060 | 1.52 | 8 | 8 | 0.67 | 17.0 | 1.69 | 42.9 | 7.0 | 21.0 |
| 4 | .060 | 1.52 | 7 | 8 | 0.75 | 19.0 | 1.89 | 48.0 | 7.0 | 21.0 |
| 3 | .060 | 1.52 | 6 | 8 | 0.77 | 19.5 | 2.08* | 52.8* | 7.0 | 21.0 |
| 2 | .060 | 1.52 | 5 | 8 | 0.81 | 20.5 | 2.23* | 56.6* | 7.0 | 21.0 |
| 1 | .080 | 2.03 | 4 | 8 | 0.97 | 24.6 | 2.48* | 62.9* | 8.0 | 24.0 |
| 1/0 | .080 | 2.03 | 3 | 8 | 1.01 | 25.6 | 2.67* | 67.8* | 8.0 | 24.0 |
| 2/0 | .080 | 2.03 | 2 | 8 | 1.10 | 27.9 | 2.86* | 72.6* | 8.0 | 24.0 |
| 3/0 | .080 | 2.03 | 1 | 8 | 1.18 | 29.9 | 3.12* | 79.2* | 8.0 | 24.0 |
| 4/0 | .080 | 2.03 | 1/0 | 8 | 1.24 | 31.5 | 3.30* | 83.8* | 8.0 | 24.0 |

*These cables require extra-heavy-duty jackets (see 3.21).
** The ground check conductor shall have a minimum of 49 wires.
*** See Table 3-24.

Copyright National Electrical Manufacturers Association
Provided by IHS under license with NEMA
No reproduction or networking permitted without license from IHS
Not for Resale

**Table 3-14**
**2000 VOLTS OR LESS**
**TYPE W FOUR-CONDUCTOR FLAT PORTABLE POWER CABLES**

| Power Conductor Size, AWG** | Power Conductor Insulation Thickness (Inches) | Nominal Outside Diameter Minor, Inches | Nominal Outside Diameter Major, Inches | Test Voltage, kV ac | Test Voltage, kV dc |
|---|---|---|---|---|---|
| 6 | .060 | 0.68 | 1.71 | 7.0 | 21.0 |
| 4 | .060 | 0.76 | 1.91 | 7.0 | 21.0 |
| 3 | .060 | 0.78 | 2.10* | 7.0 | 21.0 |
| 2 | .060 | 0.82 | 2.25* | 7.0 | 21.0 |
| 1 | .080 | 0.98 | 2.54* | 8.0 | 24.0 |

*These cables require extra-heavy-duty jackets (see 3.21.1)
**See Table 3-24

**Table 3-15**
**2000 VOLTS OR LESS**
**TYPE W AND G FIVE- AND SIX-CONDUCTOR PORTABLE POWER CABLES**

| Power Conductor Size, AWG** | Insulation Thickness, inches | Grounding Conductor (Type G) Size, AWG | Grounding Conductor (Type G) Minimum Number of Strands | Outside Diameter Five-conductor Type W and G, inches | Outside Diameter Six-Conductor Type W, inches | Test Voltage, kV ac | Test Voltage, kV dc |
|---|---|---|---|---|---|---|---|
| 8 | .060 | 8 | 49 | 1.07 | 1.18 | 7.0 | 21.0 |
| 6 | .060 | 7 | 49 | 1.21 | 1.31 | 7.0 | 21.0 |
| 4 | .060 | 5 | 133 | 1.40 | 1.52 | 7.0 | 21.0 |
| 3 | .060 | 4 | 133 | 1.48 | 1.61 | 7.0 | 21.0 |
| 2 | .060 | 3 | 133 | 1.61 | 1.75 | 7.0 | 21.0 |
| 1 | .080 | 2 | 133 | 1.88 | 2.05 | 8.0 | 24.0 |

* These cables require extra-heavy-duty jackets (see 3.21.1)
** See Table 3-24

Copyright National Electrical Manufacturers Association
Provided by IHS under license with NEMA
No reproduction or networking permitted without license from IHS

Not for Resale

## Table 3-16
## 2000 VOLTS OR LESS
## TYPE PG TWO- AND THREE-CONDUCTOR POWER CABLES

| Power Conductor Size, AWG or kcmil** | Power Conductor Insulation Thickness, inches | Grounding Conductor | | Outside Diameter | | Test Voltage, kV | |
|---|---|---|---|---|---|---|---|
| | | Size, AWG | Minimum Number of Strands | Two-conductor Cables, inches | Three-conductor Cables, inches | ac | dc |
| 8 | .060 | 8 | 49 | 0.84 | 0.93 | 7.0 | 21.0 |
| 6 | .060 | 8 | 49 | 0.93 | 1.03 | 7.0 | 21.0 |
| 4 | .060 | 6 | 49 | 1.08 | 1.20 | 7.0 | 21.0 |
| 3 | .060 | 6 | 49 | 1.17 | 1.27 | 7.0 | 21.0 |
| 2 | .060 | 5 | 133 | 1.27 | 1.34 | 7.0 | 21.0 |
| 1 | .080 | 4 | 133 | 1.44 | 1.52 | 8.0 | 24.0 |
| 1/0 | .080 | 3 | 133 | 1.52 | 1.68 | 8.0 | 24.0 |
| 2/0 | .080 | 2 | 133 | 1.65 | 1.79 | 8.0 | 24.0 |
| 3/0 | .080 | 1 | 133 | 1.77 | 1.93 | 8.0 | 24.0 |
| 4/0 | .080 | 1/0 | 259 | 1.92 | 2.13* | 8.0 | 24.0 |
| 250 | .095 | 2/0 | 259 | 2.16* | 2.39* | 9.5 | 28.5 |

* These cables require extra-heavy-duty jackets (see 3.21)

** See Table 3-24

## Table 3-17
## 2000 VOLTS OR LESS
## TYPE PCG*** TWO- AND THREE-CONDUCTOR PORTABLE POWER CABLES

| Power Conductor Size, AWG or kcmil** | Power Conductor Insulation Thickness, inches | Grounding Conductor | | Outside Diameter | | Test Voltage, kV | |
|---|---|---|---|---|---|---|---|
| | | Size, AWG | Minimum Number of Strands | Two-conductor Cables, inches | Three-conductor Cables, inches | ac | dc |
| 8 | .060 | 8 | 49 | 0.94 | 1.03 | 7.0 | 21.0 |
| 6 | .060 | 8 | 49 | 0.98 | 1.18 | 7.0 | 21.0 |
| 4 | .060 | 6 | 49 | 1.10 | 1.29 | 7.0 | 21.0 |
| 3 | .060 | 6 | 49 | 1.20 | 1.31 | 7.0 | 21.0 |
| 2 | .060 | 5 | 133 | 1.29 | 1.39 | 7.0 | 21.0 |
| 1 | .080 | 4 | 133 | 1.44 | 1.52 | 8.0 | 24.0 |
| 1/0 | .080 | 3 | 133 | 1.52 | 1.68 | 8.0 | 24.0 |
| 2/0 | .080 | 2 | 133 | 1.65 | 1.79 | 8.0 | 24.0 |
| 3/0 | .080 | 1 | 133 | 1.77 | 1.93 | 8.0 | 24.0 |
| 4/0 | .080 | 1/0 | 259 | 1.92 | 2.13* | 8.0 | 24.0 |
| 250 | .095 | 2/0 | 259 | 2.16* | 2.39* | 9.5 | 28.5 |

* These cables require extra-heavy-duty jackets (see 3.21)

** See Table 3-24

*** Control conductors for all PCG cables shall not be smaller than size 10 AWG, with a minimum of 49 strands and .030 inches insulation and, if necessary, a braid covering. The ac test voltage shall be 3.0 kV for 15 seconds . (See 3.22.4.5).

Copyright National Electrical Manufacturers Association
Provided by IHS under license with NEMA
No reproduction or networking permitted without license from IHS

Not for Resale

**Table 3-18**
**2001 TO 5000 VOLTS**
**TYPE G THREE-CONDUCTOR PORTABLE POWER CABLES**

| Power Conductor Size, AWG or kcmil** | Insulation Thickness, inches | Grounding Condcutor Size, AWG** | Jacket Thickness, inches | Outside Diameter, inches | Test Voltage, kV | |
|---|---|---|---|---|---|---|
| | | | | | ac | dc |
| 6 | .110 | 10 | .155 | 1.37 | 13.0 | 35.0 |
| 4 | .110 | 8 | .170 | 1.55 | 13.0 | 35.0 |
| 3 | .110 | 8 | .170 | 1.62 | 13.0 | 35.0 |
| 2 | .110 | 8 | .190 | 1.75 | 13.0 | 35.0 |
| 1 | .110 | 7 | .190 | 1.84 | 13.0 | 35.0 |
| 1/0 | .110 | 6 | .205 | 1.96 | 13.0 | 35.0 |
| 2/0 | .110 | 5 | .205 | 2.08* | 13.0 | 35.0 |
| 3/0 | .110 | 4 | .205 | 2.20* | 13.0 | 35.0 |
| 4/0 | .110 | 3 | .220 | 2.38* | 13.0 | 35.0 |

* These cables require extra heavy-duty jackets (see 3.21).

** See Table 3-24

Copyright National Electrical Manufacturers Association
Provided by IHS under license with NEMA
No reproduction or networking permitted without license from IHS

Not for Resale

**Table 3-19**
**TYPE SH SINGLE-CONDUCTOR PORTABLE POWER CABLES***
**FOR 100 PERCENT INSULATION LEVEL ONLY**

| Power Conductor Size, AWG or kcmil | Insulation Thickness, inches | Jacket Thickness, inches | Outside Diameter, inches | Test Voltage, kV | |
|---|---|---|---|---|---|
| | | | | ac | dc |
| | | 2001 to 5000 Volts | | | |
| 6 | .110 | .110 | 0.77 | 13.0 | .... |
| 4 | .110 | .110 | 0.82 | 13.0 | .... |
| 3 | .110 | .110 | 0.85 | 13.0 | .... |
| 2 | .110 | .125 | 0.92 | 13.0 | .... |
| 1 | .110 | .125 | 0.96 | 13.0 | .... |
| 1/0 | .110 | .140 | 1.04 | 13.0 | .... |
| 2/0 | .110 | .140 | 1.07 | 13.0 | .... |
| 3/0 | .110 | .155 | 1.18 | 13.0 | .... |
| 4/0 | .110 | .155 | 1.24 | | |
| | .110 | | | | |
| 250 | .120 | .155 | 1.32 | 13.0 | .... |
| 300 | .120 | .170 | 1.37 | 13.0 | .... |
| 350 | .120 | .170 | 1.47 | 13.0 | .... |
| 500 | .120 | .190 | 1.62 | 13.0 | .... |
| | | 5001 to 8000 Volts | | | |
| 4 | .150 | .125 | 0.97 | 18.0 | 45.0 |
| 3 | .150 | .140 | 1.03 | 18.0 | 45.0 |
| 2 | .150 | .140 | 1.07 | 18.0 | 45.0 |
| 1 | .150 | .140 | 1.12 | 18.0 | 45.0 |
| 1/0 | .150 | .155 | 1.19 | 18.0 | 45.0 |
| 2/0 | .150 | .155 | 1.24 | 18.0 | 45.0 |
| 3/0 | .150 | .155 | 1.30 | 18.0 | 45.0 |
| 4/0 | .150 | .155 | 1.37 | 18.0 | 45.0 |
| 250 | .150 | .170 | 1.45 | 18.0 | 45.0 |
| 300 | .150 | .170 | 1.52 | 18.0 | 45.0 |
| 350 | .150 | .170 | 1.57 | 18.0 | 45.0 |
| 500 | .150 | .190 | 1.76 | 18.0 | 45.0 |

(Continued)

*These cables require extra heavy-duty jackets (see 3.21).

** See Table 3-24

Copyright National Electrical Manufacturers Association
Provided by IHS under license with NEMA
No reproduction or networking permitted without license from IHS

Not for Resale

**Table 3-19 (Continued)**
**TYPE SH SINGLE-CONDUCTOR PORTABLE POWER CABLES***
**FOR 100 PERCENT INSULATION LEVEL ONLY**

| Power Conductor Size, AWG or kcmil** | Insulation Thickness, inches | Jacket Thickness, inches | Outside Diameter, inches | Test Voltage, kV ac | dc |
|---|---|---|---|---|---|
| | | 8001 to 15000 Volts | | | |
| 2 | .210 | .155 | 1.22 | 27.0 | 70.0 |
| 1 | .210 | .155 | 1.26 | 27.0 | 70.0 |
| 1/0 | .210 | .155 | 1.31 | 27.0 | 70.0 |
| 2/0 | .210 | .155 | 1.36 | 27.0 | 70.0 |
| 3/0 | .210 | .170 | 1.46 | 27.0 | 70.0 |
| 4/0 | .210 | .170 | 1.52 | 27.0 | 70.0 |
| 250 | .210 | .170 | 1.57 | 27.0 | 70.0 |
| 300 | .210 | .170 | 1.64 | 27.0 | 70.0 |
| 350 | .210 | .190 | 1.73 | 27.0 | 70.0 |
| 500 | .210 | .190 | 1.88 | 27.0 | 70.0 |
| | | 15001 to 25000 Volts | | | |
| 1 | .295 | .170 | 1.49 | 38.0 | 100.0 |
| 1/0 | .295 | .170 | 1.54 | 38.0 | 100.0 |
| 2/0 | .295 | .170 | 1.59 | 38.0 | 100.0 |
| 3/0 | .295 | .170 | 1.64 | 38.0 | 100.0 |
| 4/0 | .295 | .190 | 1.74 | 38.0 | 100.0 |
| 250 | .295 | .190 | 1.79 | 38.0 | 100.0 |
| 300 | .295 | .190 | 1.86 | 38.0 | 100.0 |
| 350 | .295 | .190 | 1.91 | 38.0 | 100.0 |
| 500 | .295 | .205 | 2.10 | 38.0 | 100.0 |

*These cables require extra heavy-duty jackets (see 3.21).

**See Table 3-24

Copyright National Electrical Manufacturers Association
Provided by IHS under license with NEMA
No reproduction or networking permitted without license from IHS

Not for Resale

**Table 3-20**
**2000 VOLTS OR LESS**
**TYPE SHC-GC THREE-CONDUCTOR PORTABLE POWER CABLES***
**FOR 100 PERCENT INSULATION LEVEL ONLY**

| Power Conductor Size, AWG or kcmil** | Power Conductor Insulation Thickness, inches | Ground Check Conductor Size, AWG** | Jacket Thickness, inch | Outside Diameter, inches | ac Test Voltage, vK |
|---|---|---|---|---|---|
| 6 | .070 | 10 | .155 | 1.27 | 7.0 |
| 4 | .070 | 10 | .155 | 1.39 | 7.0 |
| 3 | .070 | 10 | .170 | 1.49 | 7.0 |
| 2 | .070 | 10 | .170 | 1.57 | 7.0 |
| 1 | .080 | 8 | .190 | 1.75 | 8.0 |
| 1/0 | .080 | 8 | .190 | 1.85 | 8.0 |
| 2/0 | .080 | 8 | .205 | 1.99 | 8.0 |
| 3/0 | .080 | 8 | .205 | 2.11 | 8.0 |
| 4/0 | .080 | 8 | .220 | 2.29 | 8.0 |
| 250 | .095 | 8 | .220 | 2.46 | 9.5 |
| 300 | .095 | 8 | .235 | 2.63 | 9.5 |
| 350 | .095 | 8 | .235 | 2.75 | 9.5 |
| 500 | .095 | 8 | .265 | 3.14 | 9.5 |

*These cables require extra heavy-duty jackets (see 3.21).

**See Table 3-24

Copyright National Electrical Manufacturers Association
Provided by IHS under license with NEMA
No reproduction or networking permitted without license from IHS

Not for Resale

**Table 3-21**
**2000 VOLTS OR LESS**
**TYPE SHD AND SHD-GC THREE-CONDUCTOR PORTABLE POWER CABLES***
**FOR 100 PERCENT INSULATION LEVEL ONL**

| Power Conductor Size, AWG or kcmil** | Power Conductor Insulation Thickness, inches | Ground Check Conductor Size, AWG** | Jacket Thickness, inch | Outside Diameter, inches | Test Voltage, kV | |
|---|---|---|---|---|---|---|
| | | | | | ac | dc |
| | | | 2000 Volts or Less | | | |
| 6 | .070 | 10 | .155 | 1.29 | 7.0 | .... |
| 4 | .070 | 10 | .155 | 1.40 | 7.0 | .... |
| 3 | .070 | 10 | .170 | 1.51 | 7.0 | .... |
| 2 | .070 | 10 | .170 | 1.59 | 7.0 | .... |
| 1 | .080 | 8 | .190 | 1.76 | 8.0 | .... |
| 1/0 | .080 | 8 | .190 | 1.86 | 8.0 | .... |
| 2/0 | .080 | 8 | .205 | 2.00 | 8.0 | .... |
| 3/0 | .080 | 8 | .205 | 2.13 | 8.0 | .... |
| 4/0 | .080 | 8 | .220 | 2.31 | 8.0 | .... |
| 250 | .095 | 8 | .220 | 2.51 | 9.5 | .... |
| 300 | .095 | 8 | .235 | 2.68 | 9.5 | .... |
| 350 | .095 | 8 | .235 | 2.81 | 9.5 | .... |
| 500 | .095 | 8 | .265 | 3.19 | 9.5 | .... |
| | | | 2001 to 5000 Volts | | | |
| 6 | .110 | 8 | .185 | 1.56 | 13.0 | .... |
| 4 | .110 | 8 | .185 | 1.68 | 13.0 | .... |
| 3 | .110 | 8 | .205 | 1.78 | 13.0 | .... |
| 2 | .110 | 8 | .205 | 1.87 | 13.0 | .... |
| 1 | .110 | 8 | .205 | 1.95 | 13.0 | |
| 1/0 | .110 | 8 | .220 | 2.08 | 13.0 | .... |
| 2/0 | .110 | 8 | .220 | 2.20 | 13.0 | .... |
| 3/0 | .110 | 8 | .235 | 2.36 | 13.0 | .... |
| 4/0 | .110 | 8 | .235 | 2.50 | 13.0 | .... |
| 250 | .120 | 8 | .250 | 2.69 | 13.0 | .... |
| 300 | .120 | 8 | .250 | 2.81 | 13.0 | .... |
| 350 | .120 | 8 | .265 | 2.95 | 13.0 | .... |
| 500 | .120 | 8 | .280 | 3.31 | 13.0 | .... |

*These cables require extra heavy-duty jackets (see 3.21).

** See Table 3-24

Copyright National Electrical Manufacturers Association
Provided by IHS under license with NEMA
No reproduction or networking permitted without license from IHS

Not for Resale

**Table 3-21 (Continued)**
**TYPE SHD AND SHD-GC THREE-CONDUCTOR PORTABLE POWER CABLES***
**FOR 100 PERCENT INSULATION LEVEL ONLY**

| Power Conductor Size, AWG or kcmil** | Power Conductor Insulation Thickness, inches | Ground Check Conductor Size, AWG** | Jacket Thickness, inch | Outside Diameter, inches | Test Voltage, kV ac | Test Voltage, kV dc |
|---|---|---|---|---|---|---|
| | | | 5001 to 8000 Volts | | | |
| 4 | .150 | 8 | .205 | 1.94 | 18.0 | 45.0 |
| 3 | .150 | 8 | .205 | 2.02 | 18.0 | 45.0 |
| 2 | .150 | 8 | .220 | 2.12 | 18.0 | 45.0 |
| 1 | .150 | 8 | .220 | 2.21 | 18.0 | 45.0 |
| 1/0 | .150 | 8 | .220 | 2.32 | 18.0 | 45.0 |
| 2/0 | .150 | 8 | .235 | 2.46 | 18.0 | 45.0 |
| 3/0 | .150 | 8 | .250 | 2.62 | 18.0 | 45.0 |
| 4/0 | .150 | 8 | .250 | 2.75 | 18.0 | 45.0 |
| 250 | .150 | 8 | .250 | 2.89 | 18.0 | 45.0 |
| 300 | .150 | 8 | .265 | 3.04 | 18.0 | 45.0 |
| 350 | .150 | 8 | .280 | 3.20 | 18.0 | 45.0 |
| 500 | .150 | 8 | .295 | 3.56 | 18.0 | 45.0 |
| | | | 8001 to 15000 Volts | | | |
| 2 | .210 | 8 | .235 | 2.41 | 27.0 | 70.0 |
| 1 | .210 | 8 | .235 | 2.52 | 27.0 | 70.0 |
| 1/0 | .210 | 8 | .250 | 2.64 | 27.0 | 70.0 |
| 2/0 | .210 | 8 | .250 | 2.73 | 27.0 | 70.0 |
| 3/0 | .210 | 8 | .265 | 2.90 | 27.0 | 70.0 |
| 4/0 | .210 | 8 | .265 | 3.05 | 27.0 | 70.0 |
| | | | 15001 to 25000 Volts | | | |
| 1 | .295 | 8 | 265 | 2.95 | 38.0 | 100.0 |
| 1/0 | .295 | 8 | .265 | 3.05 | 38.0 | 100.0 |
| 2/0 | .295 | 8 | .280 | 3.20 | 38.0 | 100.0 |
| 3/0 | .295 | 8 | .280 | 3.33 | 38.0 | 100.0 |
| 4/0 | .295 | 8 | .295 | 3.50 | 38.0 | 100.0 |

*These cables require extra heavy-duty jackets (see 3.21).

** See Table 3-24

NOTE: See Table 3-24 for grounding conductor.

Copyright National Electrical Manufacturers Association
Provided by IHS under license with NEMA
No reproduction or networking permitted without license from IHS

Not for Resale

**Table 3-22**
**TYPE SHD-CGC THREE-CONDUCTOR PORTABLE POWER CABLES* WITH THREE GROUNDING CONDUCTORS AND ONE GROUND-CHECK CONDUCTOR**

| **Power Conductor | | Grounding Conductor | | | Ground-Check Conductor Insulation Thickness | Outside Diameter, Nominal inch | Test Voltage, kV | |
|---|---|---|---|---|---|---|---|---|
| Size AWG or kcmil | Insulation Thickness, inch | Size (Each), AWG | Number of Wires, minumum | Jacket Thickness, inch | | | ac | dc |
| 8 | 0.070 | 12 | 49 | 0.155 | 0.030 | 1.26 | 7.0 | 21.0 |
| 6 | 0.070 | 10 | 49 | 0.155 | 0.030 | 1.38 | 7.0 | 21.0 |
| 4 | 0.070 | 8 | 49 | 0.155 | 0.030 | 1.49 | 7.0 | 21.0 |
| 3 | 0.070 | 8 | 49 | 0.170 | 0.030 | 1.60 | 7.0 | 21.0 |
| 2 | 0.070 | 8 | 49 | 0.170 | 0.030 | 1.68 | 7.0 | 21.0 |
| 1 | 0.080 | 7 | 49 | 0.170 | 0.030 | 1.85 | 8.0 | 24.0 |
| 1/0 | 0.080 | 6 | 133 | 0.190 | 0.030 | 1.95 | 8.0 | 24.0 |
| 2/0 | 0.080 | 5 | 133 | 0.205 | 0.030 | 2.09 | 8.0 | 24.0 |
| 3/0 | 0.080 | 4 | 133 | 0.205 | 0.030 | 2.21 | 8.0 | 24.0 |
| 4/0 | 0.080 | 3 | 133 | 0.200 | 0.030 | 2.36 | 8.0 | 24.0 |
| 250 | 0.095 | 2 | 133 | 0.235 | 0.030 | 2.51 | 8.0 | 28.0 |
| 300 | 0.095 | 1 | 133 | 0.235 | 0.030 | 2.68 | 9.5 | 28.5 |
| 350 | 0.095 | 1 | 133 | 0.250 | 0.030 | 2.81 | 9.5 | 28.5 |
| 500 | 0.095 | 2/0 | 259 | 0.265 | 0.030 | 3.19 | 9.5 | 28.5 |

*These cables require extra heavy-duty jackets (see 3.21).
** See Table 3-24

Copyright National Electrical Manufacturers Association
Provided by IHS under license with NEMA
No reproduction or networking permitted without license from IHS

Not for Resale

**Table 3-23**
**JACKET THICKNESSES FOR TYPES AND SIZES OF PORTABLE CABLES NOT COVERED BY TABLES 3-6 THROUGH 3-22**

| Calculated Diameter Under Jacket inches | Jacket Thickness, inch |
|---|---|
| 0.325 and less | .060 |
| 0.326–0.430 | .080 |
| 0.431–0.540 | .095 |
| 0.541–0.640 | .110 |
| 0.641–0.740 | .125 |
| 0.741–0.850 | .140 |
| 0.851–1.100 | .155 |
| 1.101–1.320 | .170 |
| 1.321–1.550 | .190 |
| 1.551–1.820 | .205 |
| 1.821–2.050 | .220 |
| 2.051–2.300 | .235 |
| 2.301–2.550 | .250 |
| 2.551–2.800 | .265 |
| 2.801–3.100 | .280 |
| 3.101–3.500 | .295 |
| 3.501–3.950 | .310 |
| 3.951–4.450 | .330 |
| 4.451–5.000 | .345 |

Copyright National Electrical Manufacturers Association
Provided by IHS under license with NEMA
No reproduction or networking permitted without license from IHS

Not for Resale

Copyright National Electrical Manufacturers Association
Provided by IHS under license with NEMA
No reproduction or networking permitted without license from IHS
Not for Resale

## Table 3-24
## CONDUCTORS

| Power Conductors | | | Grounding Conductors (Round Cables) Not Covered By Tables 3-6 to 3-22 and 3-25 | | | | | | | |
|---|---|---|---|---|---|---|---|---|---|---|
| | | | No. of Grounding Conductors | | | | | | | |
| | | | 2 | | 2 | | 3 | | 4 | |
| | | | Two-Conductor Type G Cables | | Three-Conductor Types G-GC, SHC-GC, and SHD-GC Cables | | Three-Conductor Types SHD, SHD-CGC, G-CGC, and G Cables | | Four-Conductor Type G Cables | |
| Conductor Size, AWG or kcmil | Number of Wires per Conductor | Conductor Diameter, Inches | Size of Grounding Conductors AWG | Minimum Number of Wires per Conductor | Size of Grounding Conductors, AWG | Minimum Number of Wires per Conductor | Size of Grounding Conductors, AWG | Minimum Number of Wires per Conductor | Size of Grounding Conductors, | Minimum Number of Wires per Conductor |
| 8 | 49 | 0.100 | 10 | 19 | 10 | 19 | 12 | 19 | 12 | 19 |
| 6 | 49 | 0.208 | 10 | 19 | 10 | 19 | 10 | 19 | 12 | 19 |
| 4 | 49 | 0.203 | 8 | 49 | 8 | 49 | 8 | 49 | 10 | 49 |
| 3 | 49 | 0.295 | 6 | 49 | 6 | 49 | 8 | 49 | 10 | 49 |
| 2 | 133 | 0.335 | 6 | 133 | 6 | 133 | 8 | 133 | 9 | 133 |
| 1 | 133 | 0.377 | 5 | 133 | 5 | 133 | 7 | 133 | 8 | 133 |
| 1/0 | 133 | 0.423 | 4 | 133 | 4 | 133 | 6 | 133 | 7 | 133 |
| 2/0 | 133 | 0.474 | 3 | 133 | 3 | 133 | 5 | 133 | 6 | 133 |
| 3/0 | 259 | 0.536 | 2 | 259 | 2 | 259 | 4 | 259 | 5 | 259 |
| 4/0 | 259 | 0.601 | 1 | 259 | 1 | 259 | 3 | 259 | 4 | 259 |
| 250 | 259 | 0.653 | 1/0 | 259 | 1/0 | 259 | 2 | 259 | 3 | 259 |
| 300 | 259 | 0.714 | 1/0 | 259 | 1/0 | 259 | 1 | 259 | 2 | 259 |
| 350 | 259 | 0.773 | 2/0 | 259 | 2/0 | 259 | 1 | 259 | 1 | 259 |
| 400 | 259 | 0.825 | 3/0 | 259 | 3/0 | 259 | 1/0 | 259 | 1 | 259 |
| 450 | 259 | 0.870 | 3/0 | 259 | 3/0 | 259 | 1/0 | 259 | 1/0 | 259 |
| 500 | 259 | 0.922 | 4/0 | 259 | 4/0 | 259 | 2/0 | 259 | ... | ... |
| 550 | 427 | 0.960 | ... | ... | ... | ... | ... | ... | ... | ... |
| 600 | 427 | 1.013 | ... | ... | ... | ... | ... | ... | ... | ... |
| 650 | 427 | 1.053 | ... | ... | ... | ... | ... | ... | ... | ... |
| 700 | 427 | 1.094 | ... | ... | ... | ... | ... | ... | ... | ... |
| 750 | 427 | 1.131 | ... | ... | ... | ... | ... | ... | ... | ... |
| 800 | 427 | 1.169 | ... | ... | ... | ... | ... | ... | ... | ... |
| 900 | 427 | 1.239 | ... | ... | ... | ... | ... | ... | ... | ... |
| 1000 | 427 | 1.307 | ... | ... | ... | ... | ... | ... | ... | ... |

**Table 3-25**
**TYPE SHD-PCG CABLE**

2000 Volts or Less

| Conductor Size, AWG | Center Ground Conductor Size (AWG) | Center Ground Conductor Min. No. of Strands | Center Ground Conductor Nom. Dia., Inch | Power Conductor Insulation Thickness, inch | Jacket Thickness, inch | Outside* Diameter, inch | Test Voltage, ac |
|---|---|---|---|---|---|---|---|
| 1/0 | 3 | 133 | 0.295 | 0.080 | 0.205 | 2.05 | 8.0 |
| 2/0 | 2 | 133 | 0.335 | 0.080 | 0.220 | 2.25 | 8.0 |
| 3/0 | 1 | 133 | 0.377 | 0.080 | 0.220 | 2.32 | 8.0 |
| 4/0 | 1/0 | 259 | 0.423 | 0.080 | 0.250 | 2.67 | 8.0 |

2001 to 5000 Volts

| | | | | | | | |
|---|---|---|---|---|---|---|---|
| 3 | 5 | 133 | 0.234 | 0.110 | 0.205 | 1.94 | 13.0 |
| 2 | 4 | 133 | 0.263 | 0.110 | 0.205 | 2.03 | 13.0 |
| 1 | 4 | 133 | 0.263 | 0.110 | 0.220 | 2.12 | 13.0 |
| 1/0 | 3 | 133 | 0.295 | 0.110 | 0.220 | 2.26 | 13.0 |
| 2/0 | 2 | 133 | 0.335 | 0.110 | 0.220 | 2.40 | 13.0 |
| 3/0 | 1 | 133 | 0.377 | 0.110 | 0.235 | 2.58 | 13.0 |
| 4/0 | 1/0 | 259 | 0.423 | 0.110 | 0.250 | 2.76 | 13.0 |

*Tolerances shall be ± 5% of overall diameter.

Copyright National Electrical Manufacturers Association
Provided by IHS under license with NEMA
No reproduction or networking permitted without license from IHS

Not for Resale

# Section 4
# CONSTRUCTIONS OF MINE POWER FEEDER CABLE

## 4.1 SCOPE

This section covers crosslinked polyethylene and ethylene propylene rubber insulated, shielded, crosslinked or thermoplastic jacketed cables in sizes 6 AWG through 500 kcmil for use as connections between units of mine distribution systems at nominal alternating current voltages of 2001 to 15000 volts at 100 or 133 percent insulation level. These cables shall be one of the following types:

Type MP, - - Three power conductors and three grounding conductors

Type MP-GC, + - Three power conductors and two grounding conductors and one ground check conductor

The grades of insulation shall be suitable for operation at maximum conductor temperature of 90°C.

## 4.2 GENERAL REQUIREMENTS

The requirements of Sections 2 and 3 shall be met where applicable. Ampacities and minimum bending radii are given in Appendix I and Appendix F, respectively.

## 4.3 CONDUCTORS

### 4.3.1 Power Conductors

Power conductors shall be concentric lay Class B or C standard concentric, compressed or compact round, annealed coated or uncoated, copper or 3/4 hard-drawn aluminum, and shall meet the requirements given in Section 2.

Power conductors used for borehole and shaft cables shall have a minimum factor of safety of 7 when calculated by the formula F = AT/W. If the minimum factor of safety as calculated by the formula is less than 7, medium hard-drawn copper shall be used. In no case shall the factor of safety be less than 7.

Where: $F = \frac{AT}{W}$

F = Factor of safety
A = Area of the three power conductors in square inches
T = Tensile strength of conductor in pounds per square inch

| | psi |
|---|---|
| Annealed copper | 24000 |
| Medium hard copper | 40000 |
| 1350 aluminum | 17000 |

W = Weight of the length of the cable in pounds

The conductor size shall be in accordance with Table 4-1 and shall meet the requirements given in Section 2. When the size of medium hard-drawn copper power conductors is determined in accordance with Section 2, the direct-current resistance shall not exceed by more than 2 percent the values given in Table 4-6.

### 4.3.2 Conductor Stress Control Layer

The conductor stress control layer, in accordance with Section 3.14, shall be applied on each power conductor.

### 4.3.3 Ground Conductors

Grounding conductors shall be Class B or C stranded annealed coated copper and shall meet the requirements given in Section 2. The size of each grounding conductor shall be in accordance with Table 4-1.

### 4.3.4 Ground Check Conductor

The ground check conductor shall be Class B or C stranded, annealed, coated or uncoated copper of at least the minimum size shown in Table 4-1 and shall meet the requirements given in Section 2.

## 4.4 INSULATION

### 4.4.1 Power Conductor

The insulation shall be of a type meeting the requirements specified in Table 3-1. The average thickness shall not be less than specified in Tables 4-2, 4-3, and 4-4. The minimum thickness shall not be less than 90 percent of the average value.

### 4.4.2 Ground-Check Conductor

The insulation shall be of a type meeting the requirements specified in Table 3-2. The average thickness shall not be less than 0.030 inch for conductor size 10 AWG and not less than 0.045 inch for conductor size 8 AWG. The minimum thickness shall not be less than 90 percent of the specified average value.

## 4.5 INSULATION SHIELDING

The insulation shield shall consist of a nonmetallic covering directly over the insulation and a nonmagnetic metal component directly over the nonmetallic covering.

### 4.5.1 Nonmetallic Covering

A conducting nonmetallic covering either in the form of a tape or an extruded layer shall serve as a nonmetallic covering.

If an extruded conducting covering is used, it shall meet the following requirements:

NOTE: When rating the emergency operating temperature of thermoplastic insulation shielding systems, caution must be used to consider the thermal deformation characteristics of the insulation shield material.

Copyright National Electrical Manufacturers Association
Provided by IHS under license with NEMA
No reproduction or networking permitted without license from IHS
Not for Resale

The tension necessary to remove an extruded insulation shield from cable at room temperature shall be not less than 3 pounds for cables rated 2001 through 15000 volts. (See 6.20)

| | Thermoplastic | Crosslinked |
|---|---|---|
| Minimum elongation at rupture in percent after air oven test (see 6.4.15) | | |
| at 100° ± 1° for 48 hours | 100 | — |
| at 121° ± 1° for 168 hours | — | 100 |
| Brittleness temperature, not warmer than (See 6.4.15) | -10°C | -10°C |
| Maximum volume resistivity in ohm-meters (See 6.19) | | |
| at 75° ± 1°C | 500 | — |
| at 90° ± 1°C | — | 500 |

### 4.5.2 Metal Component

An annealed coated or uncoated copper component consisting of a tape or tapes, a metal braid, or a metal wire shield shall be applied over the conducting nonmetallic covering. The metal component shall be electrically continuous throughout each cable length and shall be in contact with the nonmetallic covering.

#### 4.5.2.1 METAL TAPE SHIELD

Metal tape(s) shall be of copper at least 2.5 mils thick or of other nonmagnetic metal tape(s) equivalent in conductance. If a single tape is used it must have a minimum 10 percent overlap.

#### 4.5.2.2 METAL BRAID SHIELDS

When shielding is applied in the form of a metal braid, the coverage shall be not less than 84 percent as determined by the following formula:

$$\text{Percent coverage} = 100\,(2F - F^2)$$

Where:

$F = \dfrac{NPd}{\sin \alpha}$

$\alpha$ = angle of braid with axis of cable

$\text{Tan } a = \dfrac{2\pi DP}{C}$

d = diameter of individual braid wires in inches

C = number of carriers

D = diameter under shield in inches

N = number of wires per carrier

P = picks per inch

#### 4.5.2.3 METAL WIRE SHEILD

If the shielding is applied in the form of a serving or wrap, the coverage shall be not less than 60 percent as determined by the following formula:

$$\text{Percent coverage} = Nd/W \times 100$$

Where:

N = Number of parallel wires

d = Diameter of individual wires in inches

$W = \pi D \cos \alpha$

D = Diameter under shield in inches

$\alpha$ = Angle between serving sires and axis of cable

$\text{Tan } \alpha = \pi \dfrac{D}{C}$

C = Pitch of serving in inches

### 4.6 IDENTIFICATION

Power conductors shall be identified as black, white and red. Ground check conductors shall be identified yellow.

### 4.7 CONDUCTOR ASSEMBLY

The shielded power conductors together with grounding conductors, the ground check conductor (when required), and any necessary fillers shall be cabled with a left hand lay. The grounding conductors shall be in contact with the metallic shields. The ground check conductor of the Type MP-GC cables shall be placed between the black and white conductors. A binder tape or threads may be used over the assembly. The maximum length of lay shall not exceed 35 times the diameter over the individual shield conductor.

### 4.8 JACKET

A crosslinked jacket which meets the requirements of Table 3-4 or a thermoplastic jacket which meets the requirements of Table 4-7, shall be applied over the conductor assembly. The average thickness of the jacket shall be not less than that given in Table 4-5 and the minimum thickness shall be not less than 80 percent of these values.

#### 4.8.1 Repairs

The jacket may be repaired in accordance with good commercial practice. Cables with repaired jackets must be capable of meeting all applicable requirements of this standard.

### 4.9 OUTSIDE DIAMETER

The outside diameter of the completed cable shall be within plus 8 and minus 5 percent of the values given in Tables 4-2, 4-3, and 4-4.

### 4.10 TESTS

The cable shall be tested in accordance with Section 5 and shall meet the requirements specified in this standard.

**4.10.1** Each length of completed cable shall comply with the partial discharge extinction level specified in Tables 4-2, 4-3, and 4-4.

Copyright National Electrical Manufacturers Association
Provided by IHS under license with NEMA
No reproduction or networking permitted without license from IHS
Not for Resale

**Table 4-1**
**CONDUCTOR SIZES**

| Size of Power Conductors, AWG or kcmil | | Copper Grounding Conductors | | |
|---|---|---|---|---|
| Copper | Aluminum | Type MP Cables, Size in Each Interstice, AWG | Type MP-GC Cables, Size in Each of Two Interstices, AWG | Copper Ground Check Conductor, Minimum Size, AWG |
| 6 | 4 | 10 | 10 | 10 |
| 4 | 2 | 8 | 8 | 8 |
| 2 | 1/0 | 8 | 6 | 8 |
| 1 | 2/0 | 7 | 5 | 8 |
| 1/0 | 3/0 | 6 | 4 | 8 |
| 2/0 | 4/0 | 5 | 3 | 8 |
| 3/0 | 250 | 4 | 2 | 8 |
| 4/0 | 350 | 3 | 1 | 8 |
| 250 | 400 | 2 | 1/0 | 8 |
| 300 | 450 | 1 | 1/0 | 8 |
| 350 | 500 | 1 | 2/0 | 8 |
| 400 | ... | 1/0 | 3/0 | 8 |
| 450 | ... | 1/0 | 3/0 | 8 |
| 500 | ... | 2/0 | 4/0 | 8 |

**4.10.2** Each length of completed cable rated 5kV or less shall withstand for 5 minutes, without immersion in water, the alternating current test voltage specified in Table 4-2.

**4.10.3** Each length of completed cable rated above 5kV shall withstand, without immersion in water, the alternating current test voltage specified in Table 4-3 and 4-4 for 5 minutes, and shall withstand the direct current test voltage specified in Tables 4-3 and 4-4 for 15 minutes.

**4.10.4** The power conductors in a completed cable shall comply with the requirements for insulation resistance after the high voltage ac test and before any dc voltage test.

**4.10.5** Each insulated ground check or control conductor shall withstand, prior to assembly, either the ac or dc spark test voltages, or the ac or dc test voltages applied for 5 minutes after 6 hours immersion in water. The test voltages shall be as given in 3.22.4.5.

A voltage test on the insulated ground check conductor in the completed cable shall be made between the ground check conductor and the grounding conductors by applying an alternating current voltage of 3.0kV for 15 seconds. The insulation resistance test is not required.

Copyright National Electrical Manufacturers Association
Provided by IHS under license with NEMA
No reproduction or networking permitted without license from IHS
Not for Resale

## Table 4-2
## INSULATION THICKNESSES AND OUTSIDE DIAMETERS—2001 TO 5000 VOLTS*
## 100 AND 133 PERCENT INSULATION LEVELS

| Conductor Size, AWG or kcmil | Insulation Thickness, inch | Outside Diameter inches | a-c Test Voltage, kV | Minimum Partial-discharge Extinction Level kV** Insulation Level 100 percent | 133 percent |
|---|---|---|---|---|---|
| 6 | .090 | 1.21 | 13 | 4 | 5 |
| 4 | .090 | 1.32 | 13 | 4 | 5 |
| 2 | .090 | 1.45 | 13 | 4 | 5 |
| 1 | .090 | 1.53 | 13 | 4 | 5 |
| 1/0 | .090 | 1.63 | 13 | 4 | 5 |
| 2/0 | .090 | 1.74 | 13 | 4 | 5 |
| 3/0 | .090 | 1.88 | 13 | 4 | 5 |
| 4/0 | .090 | 2.00 | 13 | 4 | 5 |
| 250 | .090 | 2.13 | 13 | 4 | 5 |
| 300 | .090 | 2.25 | 13 | 4 | 5 |
| 350 | .090 | 2.35 | 13 | 4 | 5 |
| 400 | 090 | 2.45 | 13 | 4 | 5 |
| 450 | .090 | 2.55 | 13 | 4 | 5 |
| 500 | .090 | 2.64 | 13 | 4 | 5 |

*The actual operating voltage shall not exceed the rated circuit voltage by more than (a) 5 percent during continuous operation or (b) 10 percent during emergencies lasting not more than 15 minutes.

**Unless otherwise indicated, the cable will be rated at 100 percent insulation level.

## Table 4-3
## INSULATION THICKNESSES AND OUTSIDE DIAMETERS—5001 TO 8000 VOLTS*

| | 100 Percent Insulation Level | | | | | 133 Percent Insulation Level | | | | |
|---|---|---|---|---|---|---|---|---|---|---|
| Conductor Size, AWG or kcmil | Insulation Thickness, inch | Outside Diameter, inch | Test Voltage, kV a-c | d-c | Minimum Partial-discharge Extinction Level, kV | Insulation Thickness, inch | Outside Diameter, inches | Test Voltage, kV a-c | d-c | Minimum Partial-discharge Extinction Level, kV |
| 6 | .115 | 1.33 | 18 | 45 | 6 | .140 | 1.45 | 22 | 45 | 8 |
| 4 | .115 | 1.43 | 18 | 45 | 6 | .140 | 1.54 | 22 | 45 | 8 |
| 2 | .115 | 1.55 | 18 | 45 | 6 | .140 | 1.68 | 22 | 45 | 8 |
| 1 | .115 | 1.65 | 18 | 45 | 6 | .140 | 1.78 | 22 | 45 | 8 |
| 1/0 | .115 | 1.75 | 18 | 45 | 6 | 140 | 1.90 | 22 | 45 | 8 |
| 2/0 | .115 | 1.88 | 18 | 45 | 6 | .140 | 2.00 | 22 | 45 | 8 |
| 3/0 | .115 | 2.00 | 18 | 45 | 6 | .140 | 2.12 | 22 | 45 | 8 |
| 4/0 | .115 | 2.12 | 18 | 45 | 6 | .140 | 2.25 | 22 | 45 | 8 |
| 250 | .115 | 2.25 | 18 | 45 | 6 | 140 | 2.35 | 22 | 45 | 8 |
| 300 | .115 | 2.35 | 18 | 45 | 6 | .140 | 2.48 | 22 | 45 | 8 |
| 350 | .115 | 2.46 | 18 | 45 | 6 | .140 | 2.58 | 22 | 45 | 8 |
| 400 | .115 | 2.57 | 18 | 45 | 6 | .140 | 2.70 | 22 | 45 | 8 |
| 450 | 115 | 2.66 | 18 | 45 | 6 | 140 | 2.85 | 22 | 45 | 8 |
| 500 | .115 | 2.75 | 18 | 45 | 6 | .140 | 2.93 | 22 | 45 | 8 |

*The actual operating voltage shall not exceed the rated circuit voltage by more than (a) 5 percent during continuous operation or (b) 10 percent during emergencies lasting not more than 15 minutes.

Copyright National Electrical Manufacturers Association
Provided by IHS under license with NEMA
No reproduction or networking permitted without license from IHS

Not for Resale

## Table 4-4
## INSULATION THICKNESSES AND OUTSIDE DIAMETERS—8001 TO 15000 VOLTS*

| Conductor Size, AWG or kcmil | 100 Percent Insulation Level: Insulation Thickness, inch | Outside Diameter, inch | Test Voltage, kV a-c | Test Voltage, kV d-c | Minimum Partial-discharge Extinction Level, kV | 133 Percent Insulation Level: Insulation Thickness, inch | Outside Diameter, inches | Test Voltage, kV a-c | Test Voltage, kV dc | Minimum Partial-discharge Extinction Level, kV |
|---|---|---|---|---|---|---|---|---|---|---|
| 2 | .175 | 1.88 | 27 | 70 | 11 | ... | ... | ... | ... | ... |
| 1 | .175 | 1.98 | 27 | 70 | 11 | .215 | 2.20 | 33 | 80 | 15 |
| 1/0 | .175 | 2.05 | 27 | 70 | 11 | .215 | 2.30 | 33 | 80 | 15 |
| 2/0 | .175 | 2.15 | 27 | 70 | 11 | .215 | 2.42 | 33 | 80 | 15 |
| 3/0 | .175 | 2.26 | 27 | 70 | 11 | .215 | 2.53 | 33 | 80 | 15 |
| 4/0 | .175 | 2.40 | 27 | 70 | 11 | .215 | 2.65 | 33 | 80 | 15 |
| 250 | .175 | 2.50 | 27 | 70 | 11 | ... | ... | ... | ... | ... |
| 300 | .175 | 2.64 | 27 | 70 | 11 | ... | ... | ... | ... | ... |
| 350 | .175 | 2.75 | 27 | 70 | 11 | ... | ... | ... | ... | ... |
| 400 | .175 | 2.92 | 27 | 70 | 11 | ... | ... | ... | ... | ... |
| 450 | .175 | 3.00 | 27 | 70 | 11 | ... | ... | ... | ... | ... |
| 500 | .175 | 3.10 | 27 | 70 | 11 | ... | | | | |

*The actual operating voltage shall not exceed the rated circuit voltage by more than (a) 5 percent during continuous operation or (b) 10 percent during emergencies lasting not more than 15 minutes.

## Table 4-5
## OVERALL JACKET THICKNESS

| Calculated Diameter of Cable Under Jacket inches | Jacket Thickness inch |
|---|---|
| 1.500 or less | .110 |
| 1.501 –2.500 | .140 |
| 2.501–3.500 | .170 |

## Table 4-6
## NOMINAL DIRECT-CURRENT RESISTANCE OF MEDIUM HARD-DRAWN COATED AND UNCOATED COPPER CONDUCTORS CONCENTRIC STRANDED, CLASS B AND C

| Conductor Size, AWG or kcmil | Class of Stranding | Coated Copper 20°C ohms per 1000 feet | Coated Copper 25°C ohms per 1000 feet | Uncoated Copper 20°C ohms per 1000 feet | Uncoated Copper 25°C ohms per 1000 feet |
|---|---|---|---|---|---|
| 6 | B and C | 0.436 | 0.444 | 0.417 | 0.425 |
| 4 | B and C | 0.274 | 0.279 | 0.262 | 0.267 |
| 2 | B and C | 0.172 | 0.176 | 0.165 | 0.168 |
| 1 | B and C | 0.137 | 0.139 | 0.131 | 0.133 |
| 1/0 | B and C | 0.108 | 0.110 | 0.104 | 0.106 |
| 2/0 | B and C | 0.0859 | 0.0876 | 0.0822 | 0.0838 |
| 3/0 | B and C | 0.0681 | 0.0695 | 0.0652 | 0.0665 |
| 4/0 | B | 0.0536 | 0.0547 | 0.0517 | 0.0527 |
| 4/0 | C | 0.0540 | 0.0551 | 0.0517 | 0.0527 |
| 250 | B and C | 0.0457 | 0.0466 | 0.0438 | 0.0446 |
| 300 | B and C | 0.0381 | 0.0389 | 0.0365 | 0.0372 |
| 350 | B and C | 0.0327 | 0.0333 | 0.0313 | 0.0319 |
| 400 | B | 0.0284 | 0.0289 | 0.0274 | 0.0279 |
| 400 | C | 0.0286 | 0.0292 | 0.0274 | 0.0279 |
| 450 | B | 0.0252 | 0.0257 | 0.0243 | 0.0248 |
| 450 | C | 0.0254 | 0.0259 | 0.0243 | 0.0248 |
| 500 | B | 0.0227 | 0.0231 | 0.0219 | 0.0223 |
| 500 | C | 0.0229 | 0.0233 | 0.0219 | 0.0223 |

Copyright National Electrical Manufacturers Association
Provided by IHS under license with NEMA
No reproduction or networking permitted without license from IHS

Not for Resale

**Table 4-7**
**THERMOPLASTIC JACKET REQUIREMENTS**

| | Polyvinyl Chloride | Chlorinated Polyethylene |
|---|---|---|
| Initial Physical Properties | | |
| Tensile Strength, minimum, psi | 1500 | 1400 |
| Elongation at Rupture, minimum, percent | 100 | 150 |
| Air Oven Aging | | |
| After Conditioning at °C ± 1°C | 100 | 121 |
| for hours | 120 | 168 |
| Tensile Strength, minimum, percentage of unaged value | 85 | 85 |
| Elongation, minimum, percentage of unaged value | 60 | 50 |
| Oil Immersion | | |
| After Conditioning at °C ± 1°C | 70 | 100 |
| for hours | 4 | 18 |
| Tensile Strength, minimum, percentage of unaged value | 80 | 60 |
| Elongation, minimum, percentage of unaged value | 60 | 60 |
| Cold Bend | | |
| After Conditioning at—35 °C ± 2°C for 1 hour | No Cracks | No Cracks |
| Heat Shock | | |
| After Conditioning at121 °C ± 1°C for 1 hour | No Cracks | - - - |
| Heat Distortion, 121 °C ± 1°C | | |
| maximum, percent | 50 | 25 |

Copyright National Electrical Manufacturers Association
Provided by IHS under license with NEMA
No reproduction or networking permitted without license from IHS

Not for Resale

--`,,,`,-`-`,,`,,`,`,,`---

Copyright National Electrical Manufacturers Association
Provided by IHS under license with NEMA
No reproduction or networking permitted without license from IHS

Not for Resale

# Section 5
# SPECIAL CONSTRUCTIONS

## 5.1 PORTABLE ARC-WELDING CABLES

### 5.1.1 Scope

This section covers single-conductor portable electrode holder or trailing cables with a heavy-duty or medium-duty jacket. These cables are distinguished by the requirements for the jackets given in 5.1.4. They are of the following types:

TYPE A --HEAVY DUTY
TYPE B --MEDIUM DUTY

**NOTE:** The cables covered by this standard are not voltage rated. They are intended for use as arc welding leads between the power source and hand held welding electrode at operating potentials up to 100 volts.

### 5.1.2 Conductors

The conductor shall be rope-lay stranded with bunch-stranded members. The number of wires in the completed conductor shall be not less then 98 percent of the values given in 5.1.5. The nominal size of the individual wires in the conductor shall be 30 AWG (Class K) or 34 AWG (Class M). The wires, prior to stranding, shall be annealed uncoated copper which meets the requirements of Section 2.

The size of conductors shall be determined in accordance with 6.3. When the method described in 6.3.1 is used, the direct current resistance shall not exceed by more than 2 percent the values given in Table 5-1.

### 5.1.3 Separator

A separator shall be applied directly over the conductors.

### 5.1.4 Jackets

#### 5.1.4.1 HEAVY-DUTY JACKETS (TYPE A)

The jacket shall be one of the materials listed in Table 5-2 which, when tested in accordance with Section 6, shall meet the applicable following requirements. The jackets shall be applied in one or two layers. If reinforcement is required in two-layer jackets, it shall be applied between the two layers. Where flame resistance is required, the cable shall be capable of passing the vertical flame test as described in 5.1.6.

#### 5.1.4.2 MEDIUM-DUTY JACKETS (TYPE B)

The jacket shall be one of the materials listed in Table 5-3 which, when tested in accordance with Section 6, shall meet the applicable following requirements. Where flame resistance is required, the cable shall be capable of passing the vertical flame test as described in 5.1.6.

### 5.1.5 Number Of Wires, Outside Diameters And Diameter Tolerances

The nominal number of wires, outside diameters and diameter tolerances shall be as given in Table 5-4.

**Table 5-1**
**NOMINAL DIRECT-CURRENT RESISTANCE OF ANNEALED UNCOATED COPPER CONDUCTORS (AT 25 °C ) OF PORTABLE ARC-WELDING CABLE**

| Conductor Size AWG or kcmil | Class K ohms per 1000 feet | Class M ohms per 1000 feet |
|---|---|---|
| 8 | 0.666 | 0.666 |
| 6 | 0.419 | 0.423 |
| 5 | 0.332 | 0.336 |
| 4 | 0.263 | 0.266 |
| 3 | 0.211 | 0.213 |
| 2 | 0.167 | 0.169 |
| 1 | 0.133 | 0.134 |
| 1/0 | 0.105 | 0.106 |
| 2/0 | 0.0842 | 0.0850 |
| 3/0 | 0.0668 | 0.0674 |
| 4/0 | 0.0530 | 0.0535 |
| 250 | 0.0448 | 0.0453 |
| 300 | 0.0374 | 0.0377 |
| 350 | 0.0323 | 0.0323 |
| 400 | 0.0283 | 0.0283 |
| 450 | 0.0251 | 0.0251 |
| 500 | 0.0226 | 0.0226 |

Copyright National Electrical Manufacturers Association
Provided by IHS under license with NEMA
No reproduction or networking permitted without license from IHS
Not for Resale

### 5.1.6 Flame Test Requirements

This section describes the flame test requirements for portable arc-welding cables described within this standard. This test shall not be applicable unless specifically requested.

**5.1.6.1** The test apparatus shall consist of the following:

1. Test chamber of sheet metal 12 inches (305 mm) wide, 14 inches (35 mm) deep, and 24 inches (610 mm) high, which is open at the top, and which is provided with means for clamping the test specimen at the upper end and suppporting in a vertical position.
2. Means for adjusting the position of the test specimen.
3. A 4-pound (1.8kg) weight (for 8 AWG) to be attached to the lower end of the test specimen to keep it taut.
4. Tirrill burner with an attached pilot light and mounted on a 20 degree angle block. The burner shall have a nominal bore of 3/8 inch (9.5 mm) and a length of approximately 4 inches above the primary air inlets.
5. An adjustable steel angel (jig) attached to the bottom of the chamber to insure the correct location of the burner with relation to the test specimen.
6. Gas (a supply of ordinary illuminating gas at normal pressure).
7. Watch or clock with a hand which makes one complete revolution per minute.
8. Flame indicators consisting of strips of gummed kraft paper having a nominal thickness of 5 mils (0.127 mm) and a width of 1/2 inch (12.7 mm).*
9. Untreated surgical cotton.

• The paper used for the indicators is known to the trade as 60-pound stock and is material substantially the same as that described in Federal Specification UU-T-111 covering "Tape, Paper, Gummed (Kraft)."

**5.1.6.2** The test shall be made in a room which is generally free from draft of air, although a ventilated hood may be used if air currents do not affect the flame. One end of the test specimen, approximately 22 inches (559 mm) in length, shall be clamped in position at the upper end of the chamber, and (for 8 AWG) the 4-pound (1.8-kg) weight attached to keep the specimen taut. A paper indicator shall be applied to the specimen so that the lower edge is 10 inches (254 mm) above the point at which the inner blue cone of the test flame is to be applied. The indicator shall be wrapped once around the specimen, with the gummed side toward the conductor. The ends shall be pasted evenly together and shall project 3/4 inch (19.0 mm) from the specimen on the opposite side of the specimen to that to which the flame is to be applied. The paper tab shall be moistened only to the extent necessary to permit proper adhesion. The height of the flame with the burner vertical shall be adjusted to 5 inches (127 mm), with an inner blue cone 1 1/2 inches (38.1 mm) high.

The temperature at the tip of the inner blue cone shall be not less than 816°C (1500°F).

A flat horizontal layer of untreated surgical cotton shall be placed on the floor of the chamber and centered directly under the specimen. The upper surface of the cotton shall be no more than 9½ inches from the point at which the inner blue cone touches the cable surface.

**5.1.6.3** The burner, with only the pilot lighted, shall be placed in front of the sample so that the vertical plane through the stem of the burner includes the axis of the wire or cable. The angle block shall rest against the jig, which shall be adjusted so that there is a distance of 1½ inches between the tip of the stem and the surface of the specimen. The valve supplying the gas to the burner properly shall then be opened and the flame automatically applied to the sample. This valve shall be held open for 60 seconds and then closed for 30 seconds, then reopened for 60 seconds, closed for 30 seconds, etc. for a total of three 60 second flame applications. During each application of flame, the position of the burner or specimen shall be adjusted, as necessary, so that the tip of the inner blue cone just touches the surface of the specimen.

**5.1.6.4** The specimen shall be considered to have failed this test if any of the following occurs:

a. More than 25 percent of the extended portion of the indicator is burned.
b. The specimen continues to burn for more than one minute after the third flame application.
c. The surgical cotton is ignited.

*Suitable for a minimum temperature of minus 10°C (;plus 14°F)

*Suitable for a minimum temperature of minus 10°C (;plus 14°F)

Copyright National Electrical Manufacturers Association
Provided by IHS under license with NEMA
No reproduction or networking permitted without license from IHS
Not for Resale

**Table 5-2**
**HEAVY-DUTY JACKETS (TYPE A)**

| | Natural Rubber | SBR | Neo-prene | Nitrile-Butadiene/ Polyvinvyl-Chloride* | Chlori-nated Poly-ethylene, Cross-Linked | Ethylene Propylene Rubber | Chloro-Sulfonated Poly-ethylene |
|---|---|---|---|---|---|---|---|
| Physical requirements | | | | | | | |
| Tensile strength, minimum | | | | | | | |
| psi | 3500 | 1800 | 1800 | 1800 | 1800 | 1800 | 1800 |
| MPa | 24.1 | 12.4 | 12.4 | 12.4 | 12.4 | 12.4 | 12.4 |
| Tensile stress at 200 percent elongation, minimum | | | | | | | |
| psi | 500 | — | 500 | 500 | 500 | 500 | 500 |
| MPa | 3.45 | — | 3.45 | 3.45 | 3.45 | 3.45 | 3.45 |
| Elongation at rupture, minimum, percent | 500 | 300 | 300 | 300 | 300 | 250 | 300 |
| Set, maximum, percent | 15 | 20 | 20 | 30 | 30 | — | 30 |
| Tear, resistance, minimum | | | | | | | |
| pounds per inch | 40 | — | — | — | — | — | — |
| kN/m | 7.01 | — | — | — | — | — | — |
| Aging requirements | | | | | | | |
| After air oven test at 100°C ± 1°C for 168 hours | | | | | | | |
| Tensile strength, minimum, percentage of unaged value | — | | 50 | 50 | 85 | 75 | 85 |
| Elongation at rupture, minimum, percentage of unaged value | — | | 50 | 50 | 55 | 75 | 65 |
| After air oven test at 70°C ± 1°C for168 hours | | | | | | | |
| Tensile strength, minimum, | | | | | | | |
| psi | — | 1600 | — | — | — | — | — |
| MPa | — | 11.0 | — | — | — | — | — |
| Elongation at rupture, minimum, percent | — | 250 | — | — | — | — | — |
| After air pressure heat test at 127°C ± 1°C for 20 hours | — | — | — | — | — | — | — |
| Tensile strength and Elongation at rupture, minimum, percentage of unaged value | — | — | — | 50 | — | — | — |
| Afteroxygen pressure test at 70°C ± 1°C for 96 hours | — | — | — | 50 | — | — | — |
| Tensile strength, minimum, | | | | | | | |
| psi | 2500 | 1600 | — | — | — | — | — |
| MPa | 17.2 | 11.0 | — | — | — | — | — |
| Elongation at rupture, minimum, percent | 400 | 250 | — | — | — | — | — |
| After oxygen pressure test at 80°C ± 1°C for 168 hours | — | — | — | — | — | — | — |
| Tensile strength, and Elongation at rupture, minimum, percentage of unaged value | — | — | — | 50 | — | — | — |
| After oil immersion test at 121°C ± 1°C for 18 hours | | | | | | | |
| Tensile strength, and Elongation at rupture, minimum, percentage of unaged value | — | — | 60 | 60 | 60 | — | 60 |

* Suitable for a minimum temperature of minus 10°C (plus 14°F)

Copyright National Electrical Manufacturers Association
Provided by IHS under license with NEMA
No reproduction or networking permitted without license from IHS
Not for Resale

**Table 5-3**
**MEDIUM-DUTY JACKETS (TYPE B)**

| | SBR | Neoprene | Nitrile-Butadiene/ Polyvinyl-Chloride* | Chlorinated Polyethylene, Cross-Linked | Ethylene Propylene Rubber | Chloro-Sulfonated Polyethylene |
|---|---|---|---|---|---|---|
| Physical requirements | | | | | | |
| Tensile strength, minimum | | | | | | |
| psi | 1200 | 1200 | 1500 | 1500 | 1200 | 1200 |
| MPa | 8.27 | 8.27 | 10.3 | 10.3 | 8.27 | 8.27 |
| Elongation at rupture, minimum, percent | 250 | 250 | 250 | 300 | 150 | 250 |
| Set, maximum, percent | — | 20 | 30 | 35 | — | 30 |
| Aging requirements | | | | | | |
| After air oven test at 100°C ± 1°C for 168 hours | | | | | | |
| Tensile strength, minimum, percentage of unaged value | — | 50 | 50 | 85 | 75 | 85 |
| Elongation at rupture, minimum, percentage of unaged value | — | 50 | 50 | 55 | 75 | 65 |
| After oxygen pressure test at 70°C ± 1°C for48 hours | | | | | | |
| Tensile strength, minimum, | | | | | | |
| psi | 1000 | — | — | — | — | — |
| MPa | 6.89 | — | — | — | — | — |
| Elongation at rupture, minimum, percent | 100 | — | — | — | — | — |
| After oxygen pressure test at 80°C ± 1°C for 168 hours | | | | | | |
| Tensile strength and Elongation at rupture, minimum, percentage of unaged value | — | — | 50 | — | — | — |
| After air pressure heat test at 127°C ± 1°C for 20 hours | | | | | | |
| Tensile strength, and Elongation at rupture, minimum, percentage of unaged value | — | — | 50 | — | — | — |
| After oil immersion test at 121°C ± 1°C for 18 hours | | | | | | |
| Tensile strength, and Elongation, minimum, percentage of unaged value | — | 60 | 60 | 60 | — | 60 |

* Suitable for a minimum temperature of minus 10°C (plus 14°F)

Copyright National Electrical Manufacturers Association
Provided by IHS under license with NEMA
No reproduction or networking permitted without license from IHS
Not for Resale

**Table 5-4**
**CONSTRUCTION DETAILS**

| Conductor Size AWG or kcmil | Nominal Number of Wires #30 AWG | Nominal Number of Wires #34 AWG | Outside Dia., Inches | Tolerance Plus & Minus, Inches |
|---|---|---|---|---|
| 8 | 168 | 420 | .320 | .020 |
| 6 | 266 | 665 | .390 | .020 |
| 5 | 336 | 836 | .420 | .020 |
| 4 | 420 | 1064 | .450 | .020 |
| 3 | 532 | 1323 | .480 | .020 |
| 2 | 665 | 1666 | .550 | .030 |
| 1 | 836 | 2107 | .600 | .030 |
| 1/0 | 1064 | 2646 | .660 | .030 |
| 2/0 | 1323 | 3325 | .730 | .040 |
| 3/0 | 1666 | 4256 | .800 | .040 |
| 4/0 | 2107 | 5320 | .870 | .040 |
| 250 | 2499 | 6384 | .920 | .050 |
| 300 | 2989 | 7581 | 1.01 | .050 |
| 350 | 3458 | 8806 | 1.05 | .050 |
| 400 | 3990 | 10101 | 1.13 | .060 |
| 450 | 4522 | 11396 | 1.19 | .060 |
| 500 | 5054 | 12691 | 1.24 | .060 |

Copyright National Electrical Manufacturers Association
Provided by IHS under license with NEMA
No reproduction or networking permitted without license from IHS

Not for Resale

Copyright National Electrical Manufacturers Association
Provided by IHS under license with NEMA
No reproduction or networking permitted without license from IHS

Not for Resale

# Section 6
# TESTING AND TEST METHODS

## 6.1 TESTING

All wires and cables shall be tested at the factory to determine their compliance with requirements given in Sections 2, 3, 4, 5, 7, and 8. When there is a conflict between the test methods given in Section 6 and publications of other organizations to which reference is made, the requirements given in Section 6 shall apply.

Tests shall consist of the following, as required, namely (1) tests on samples--see 6.3 to 6.20 inclusive, and 6.25, (2) electrical tests on entire lengths of completed cables-see 6.22 to 6.24 inclusive, and (3) conductor resistance tests--see 6.3--on samples or on entire lengths of completed cables.

The test methods described in Section 6 are not completely applicable to all types of wires and cables, nor do they include every test applicable to a particular type of wire or cable. To determine which tests are to be made, refer to the parts in this publication which set forth the requirements to be met by the particular material or type of cable.

## 6.2 TESTS ON SAMPLES

Tests shall be made on samples selected at random. Each test sample shall be taken from the accessible end of different coils or reels. Each coil or reel selected, and the corresponding sample, shall be identified. The number and lengths of samples shall be as specified under the individual tests.

## 6.3 CONDUCTOR TEST METHODS

When samples are measured, they shall be selected in accordance with Table 6-2.

### 6.3.1 Method for Direct Current Resistance Determination

Measurement shall be made either on a sample at least 1 foot long or on the entire length of completed cable. When the nominal resistance is less than 1 ohm, the measurement shall be made with a Kelvin-type bridge or potentiometer. When the nominal resistance is 1 ohm or more, the measurement shall be made with a Kelvin-type bridge, or a Wheatstone bridge, or a potentiometer.

When measurements are made on a sample, either as original measurements or for verification, the following precautions shall be taken:

a. Current contacts shall be made in such a way as to assure essentially uniform current density among the wires.

b. When potential leads are used, the distance between each potential contact and the corresponding current contact shall be at least equal to 1 1/2 times the circumference of the specimen. When a Kelvin-type

**Table 6-1**
**FACTORS FOR CONVERTING MEASURED DC RESISTANCE TO 25°C (77°F)**

| Temperature, Degrees, C | Multiplying Factor for Copper | Multiplying Factor for Aluminum |
|---|---|---|
| 0 | 1.107 | 1.110 |
| 5 | 1.084 | 1.085 |
| 10 | 1.061 | 1.063 |
| 15 | 1.040 | 1.041 |
| 20 | 1.020 | 1.020 |
| 25 | 1.000 | 1.000 |
| 30 | 0.981 | 0.981 |
| 35 | 0.963 | 0.962 |
| 40 | 0.945 | 0.944 |
| 45 | 0.928 | 0.927 |
| 50 | 0.912 | 0.910 |
| 55 | 0.896 | 0.894 |
| 60 | 0.881 | 0.878 |
| 65 | 0.866 | 0.863 |
| 70 | 0.852 | 0.849 |
| 75 | 0.838 | 0.835 |
| 80 | 0.825 | 0.821 |
| 85 | 0.812 | 0.808 |
| 90 | 0.800 | 0.796 |

The correction factors are based upon copper having 100 percent conductivity and aluminum having 61 percent conductivity. The factors are derived from the formulae:

$$R_1 = R_2 \frac{259.5}{234.5+T_2} \text{ for copper}$$

$$R_1 = R_2 \frac{253}{228+T_2} \text{ for aluminum}$$

Where:

R1 = Resistance at 25°C

R2 = Measured resistance at test temperature $T_2$.

For more accurate determination of resistance, allowing for different conductivities, see "Copper Wire Tables," National Bureau of Standards Handbook 100; or "Aluminum Wire Tables," National Bureau of Standards Handbook 109, and ASTM B193.

**Table 6-2**
**NUMBER OF SAMPLES**

| Quality of Completed Cable Ordered | Number of Samples |
|---|---|
| Less than 2000 | 0 |
| 2000-10,000 | 1 |
| Each 10,000 or fraction thereof from 10,000–50,000 | 1 |
| Each additional 50,000 or fraction thereof | 1 |

Copyright National Electrical Manufacturers Association
Provided by IHS under license with NEMA
No reproduction or networking permitted without license from IHS

Not for Resale

bridge is used, the yoke resistance (between reference standard and test specimen) shall be appreciably smaller than that of either the reference standard or the test specimen unless a suitable lead compensation is used, or it is known that the coil and lead ratios are sufficiently balanced so that variation in yoke resistance will not decrease the bridge accuracy below that given in item d.

c. The distance between potential electrodes shall be measured to an accuracy of ± 0.05 percent. To assure this accuracy in measuring the length between potential contacts, the surface in contact with the test specimen shall be a substantially sharp knife edge.

d. Resistance measurements shall be made to an accuracy of ± 0.15 percent. To assure a correct reading, the reference standard and the test specimen should be allowed to come to the same temperature as the surrounding medium. (If the reference standard is made of manganin, it is possible to obtain correct readings with the test specimen at reference temperatures other than room temperature.)

e. In all resistance measurements, the measuring current raises the temperature of the medium. Therefore, the magnitude of the current shall be low and the time of its use short enough so that changes in resistance cannot be detected with the galvanometer.

f. In bridge measurements, the potential contact resistance shall be as low as possible. If low contact resistance cannot be achieved, appropriate contact-resistance corrective circuits shall be used. To eliminate errors due to contact potential, two readings, one direct and one with current reversed, shall be taken in direct succession. check tests may be made by turning the specimen end for end and repeating the test. The material used for the two potential contacts shall be the same to minimize imbalanced contact potentials. if necessary, the contact surfaces shall be cleaned.

### 6.3.2 Methods for Cross-Sectional Area Determination

#### 6.3.2.1 CROSS-SECTIONAL AREA BY DIAMETER MEASUREMENT

The cross-sectional area shall be calculated as follows:

$$A = 10^{-3} \sum_{i=1}^{n} d_i^{\,2}$$

Where:

i = 1

A = cross-sectional area in kcmil

$d_i$ = diameter of the ith wire in mils, determined according to 6.3.3.1.

n = total number of wires in conductor

#### 6.3.2.2 CROSS-SECTIONAL AREA BY WEIGHT

The cross-sectional area shall be determined in accordance with *ASTM B263*.

### 6.3.3 Methods for Diameter Determination

#### 6.3.3.1 DIAMETER BY MICROMETER MEASUREMENT

Diameter measurement shall be made with a micrometer, or other suitable instrument, readable to at least 0.0001 inch. Round wires shall be measured at each end of the sample and near the middle of the sample. The average of the three measurements shall be taken as the diameter.

Stranded conductors shall be measured around the circumference of the conductor perpendicular to the axis of the conductor and on the extensions of a line through the center of the conductor and through the center of two wires in the outer layer 180 degrees apart. The average of three measurements shall be taken as the diameter.

#### 6.3.3.2 DIAMETER BY TAPE MEASUREMENT

A diameter tape readable to at least 0.005 inch shall be wrapped one turn (360°) around the circumference of the conductor, tightly and perpendicular to the axis of the conductor. The average diameter of the conductor shall be read directly from the diameter tape.

## 6.4 TEST SAMPLES AND SPECIMENS FOR PHYSICAL AND AGING TESTS

### 6.4.1 General

Physical and aging tests shall be those required by Sections 3, 4, 7, and 8.

### 6.4.2 Number of Thickness Measurements

When the lot of wire to be inspected consists of two coils or reels, or less, at least one determination of the thickness shall be made on each coil or reel. When the lot consists of more than two coils or reels and less than 20 coils or reels, at least one determination of the thickness shall be made on each of two coils or reels taken at random. If the lot consists of 20 or more coils or reels, not less than 10 percent of the coils or reels shall be selected at random and at least one determination of the thickness shall be made on each coil or reel so selected. In the case of multiple-conductor cables, the measurements shall be made on the individual conductors before they are cabled.

### 6.4.3 Measurement of Thickness

The measurement of thickness for cables with unbonded components shall be made with either a micrometer or microscope but, for cables with bonded components, shall be made only with a microscope. The micrometer and microscope shall be capable of making measurements accurate to at least 0.001 inch.

Copyright National Electrical Manufacturers Association
Provided by IHS under license with NEMA
No reproduction or networking permitted without license from IHS

Not for Resale

#### 6.4.3.1 MICROMETER MEASUREMENTS

When a micrometer is used, the average thickness of the insulation shall be taken as one-half of the difference between the mean of the maximum and minimum diameters over the insulation at one point and the average diameter over the conductor or any separator measured at the same point. The minimum thickness of the insulation shall be taken as the difference between a measurement made over the conductor or any separator plus the thinnest insulation wall, and the diameter over the conductor or any separator. The first measurement shall be made after slicing off the thicker side of the insulation. The thickness of any separator shall not be included in the thickness of insulation.

If the wire or cable has a jacket, the jacket shall be removed and the minimum and maximum thickness of the jacket determined directly with a micrometer. The average of these determinations shall be taken as the average thickness of the jacket.

#### 6.4.3.2 MICROSCOPE MEASUREMENTS

When a microscope is used, the maximum and minimum thickness shall be determined from a specimen cut perpendicular to the axis of the sample so as to expose the full cross-section. The average of these determinations shall be taken as the average thickness.

### 6.4.4 Sampling of Insulation for Physical and Aging Tests

Samples of insulated conductors for the unaged and aged physical tests shall be taken after crosslinking of the insulation but prior to the application of all coverings, except those applied over the insulation before it is crosslinked. For insulation subjected to a second crosslinking, samples of insulated conductors may be taken either before or after the second crosslinking.

Samples of insulated conductors shall be selected in accordance with Table 6-3.

### 6.4.5 Sampling of Jacket for Physical and Aging Tests

Samples of jacketed cable for the unaged and aged physical tests shall be selected in accordance with Table 6-4. If crosslinking of jackets is necessary, samples shall be taken after crosslinking but prior to the application of all coverings except those applied over the jacket before it is crosslinked. No tests shall be performed on jackets less than 30 mils in thickness.

### 6.4.6 Number of Test Specimens

From each of the samples selected in accordance with 6.4.4 and 6.4.5, test specimens shall be prepared in accordance with Table 6-5.

### 6.4.7 Size of Specimens

The test specimens shall be prepared using either ASTM D 412 Die B or E with specimen length not less than 6 inches or ASTM D 412 Die C or D, with specimen length not less than 4.5 inches (114 mm).

In the case of wire and cable smaller than size 6 AWG having an insulation thickness of 0.090 inch. (2.29 mm) or less, the test specimen shall be permitted to be the entire section of the insulation. When the full cross-section is used, the specimens shall not be cut longitudinally. In the case of wire and cable size 6 AWG and larger, or in the case of wire and cable smaller than size 6 AWG having an insulation thickness greater than 0.090 inch, specimens approximately square in section, with a cross-section not greater than 0.025 square inch, shall be cut from the insulation. In extreme cases, it may be necessary to use a segmental specimen.

Specimens for tests on jacket compounds shall be taken from the completed wire or cable and cut parallel to the

**TABLE 6-3**
**NUMBER AND LENGTH OF SAMPLES**
**(INSULATION: PHYSICAL & AGING TESTS)**

| Quantity of Completed Cable Ordered, feet | Size of Conductor kcmil | Number of Samples | Minimum Length of Each Sample Conductor feet |
|---|---|---|---|
| Less than 2,000 | Less than 250 | none | ... |
| Less than 1,000 | 250 and larger | none | ... |
| 2,000-50,000 | Less than 250 | 1 | 6 |
| 1,000-25,000 | 250 and larger | 1 | 3 |
| More than 25,000 | | | |
| First 25,000 | 250 and larger | 1 | 3 |
| Each additional 25,000 | 250 and larger | 1 | 3 |
| More than 50,000 | | | |
| First 50000 | Less than 250 | 1 | 6 |
| Each additional 50,000 | Less than 250 | 1 | 6 |

Copyright National Electrical Manufacturers Association
Provided by IHS under license with NEMA
No reproduction or networking permitted without license from IHS
Not for Resale

axis of the wire or cable. The test specimen shall be a segment cut with a sharp knife, or a shaped specimen cut out with a die, and shall have a cross-sectional area not greater than 0.025 square inch after irregularities, corrugations, and reinforcing cords or wires have been removed.

### 6.4.8 Preparation of Specimens of Insulation and Jacket.

The test specimens shall have no surface incisions and shall be as free as possible from other imperfections. Where necessary, surface irregularities, such as corrugations due to stranding, etc., shall be removed, so that the test specimen will be smooth and of uniform thickness.

NOTE: The removal of the rubber insulation can be greatly accelerated, and, in most cases, a test specimen which is an entire section can be obtained free from surface incisions and imperfections, by means of mercury. The mercury should be introduced at one end of the specimen between the insulation and the tinned surface of the conductor, and the specimen inclined on a support with the end to which the mercury is applied at the top. The separation of the rubber insulation results from the amalgamation of the tin of the conductor with the mercury. The amalgamation is assisted by first immersing and rubbing the tinning on the exposed end of the conductor in the mercury.

### 6.4.9 Specimens with Thin Jackets Crosslinked to Insulation

In the case of wires or cables having a thin jacket crosslinked directly to the insulation, die-cut specimens of the jacket and insulation shall be prepared. The jacket shall be separated from the insulation by slitting the covering through to the conductor and pulling the jacket and insulation apart by means of pliers. (This procedure may sometimes be facilitated by immersing the sample in hot water for a few minutes just prior to pulling off the jacket.) If the jacket cannot be removed, specimens shall be prepared by buffing. The buffing apparatus for this operation shall be equipped with a cylindrical table, arranged so that it can be advanced very gradually. The conductor shall be removed from two short lengths of wire by slitting the covering. One length of covering shall be stretched into the clamps of the buffing apparatus so that it lies flat, with the jacket toward the wheel. The jacket shall be buffed off, with due care not to buff any further than necessary. The process shall be repeated with the other length of covering, except that the insulation shall be buffed off. Die-cut specimens shall be prepared from the buffed pieces after they have been allowed to recover for at least 30 minutes. [In the case of specimens from small wires, it may be necessary to use a die having a constricted portion 1/8 inch wide.] Jackets less than 0.080 inch thick shall not be tested.

### 6.4.10 Specimens for the Tear Test

The specimen for the tear test shall be cut with a sharp knife or die. After irregularities, corrugations, and reinforcing cords or wires have been removed, the test specimen shall have the dimensions shown in Figure 6-1. The test specimen shall not be more than 0.150 inch thick and not less than 0.040 inch thick. The specimen shall be split

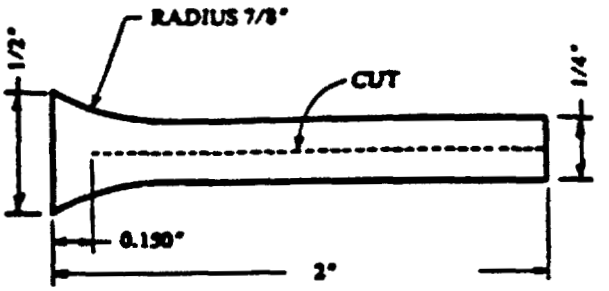


**Figure 6-1**
**TEST SPECIMEN FOR TEAR TEST**

longitudinally with a new razor blade to a point 0.150 inch from the wider end.

### 6.4.11 Specimens for Accelerated Aging Test

Samples shall be taken after crosslinking and prior to the application of any covering except those applied before crosslinking. Tests shall be made not earlier than 24 hours, nor later than 60 days, after vulcanization. Specimens shall not be heated, immersed in water, nor subjected to any mechanical or chemical treatment not specifically described in this standard. Specimens for accelerated aging test having cable tape applied prior to crosslinking shall be aged with such tape removed.

### 6.4.12 Calculation of Area of Test Specimens

**6.4.12.1** Where the total cross-section of the insulation is used, the area shall be taken as the difference between the area of the circle whose diameter is the average outside diameter of the insulation and the area of the conductor. The area of a stranded conductor shall be calculated from its maximum diameter.

**6.4.12.2** Where a slice cut from the insulation by a knife held tangent to the wire is used, and when the cross-section of the slice is the cross-section of a segment of a circle, the area shall be calculated as that of the segment of a circle whose diameter is that of the insulation. The height of the segment is the wall of insulation on the side from which the slice is taken.

Copyright National Electrical Manufacturers Association
Provided by IHS under license with NEMA
No reproduction or networking permitted without license from IHS
Not for Resale

**Table 6-4**
**NUMBER AND LENGTH OF SAMPLES**
**(JACKET: PHYSICAL & AGING TESTS)**

| Quantity of Completed Cable Ordered, feet | Nominal Overall Diameter of Cable inches | Number of Samples | Minimum Length of Each Sample Cable feet |
|---|---|---|---|
| Less than 2,000 | Less than 1.0 | none | ... |
| Less than 1,000 | 1.0 and larger | none | ... |
| 2,000-50,000 | Less than 1.0 | 1 | 6 |
| 1,000-25,000 | 1.0 and larger but less than 2.0 | 1 | 3 |
| More than 50,000 | 2.0 and larger | 1 | 2 |
| First 50,000 | Less than 1.0 | 1 | 6 |
| Each additional 50,000 | Less than 1.0 | 1 | 6 |
| More than 25,000 | | | |
| First 25,000 | 1.0 and larger but less than 2.0 | 1 | 3 |
| Each additional 25,000 | 1.0 and larger but less than 2.0 | 1 | 3 |
| More than 25,000 | | 1 | 2 |
| First 25,000 | | 1 | 2 |
| Each additional 25,000 | 2.0 and larger | | |
| | 2.0 and larger | | |

**Table 6-5**
**NUMBER OF TEST SPECIMENS**

| | Total Number of Test Specimens |
|---|---|
| For determination of unaged properties | |
| Tensile strength, tensile stress, and ultimate elongation | 3** |
| Permanent set | 3** |
| Tear | 6 |
| For accelerated aging tests | |
| Air pressure heat or oxygen pressure | 3** |
| Air oven | 3** |
| For oil immersion | 3** |
| Heat shock | 1* |
| Heat distortion | 3** |
| Cold bend | 1* |
| Environmental cracking | 3** |
| Absorption Coefficient | 3** |
| Hot Creep | 1* |
| Stripping | 1* |

*For the heat-shock, cold bend, hot creep, and stripping tests, only one specimen shall be tested.

**One test specimen out of three shall be tested and the other two specimens held in reserve, except that when only one sample is selected in accordance with 6.4.4 and 6.4.5, all three test specimens shall be tested and the average of the results reported.

Copyright National Electrical Manufacturers Association
Provided by IHS under license with NEMA
No reproduction or networking permitted without license from IHS

Not for Resale

When the cross-section of the slice is not a segment of a circle, the area shall be calculated from a direct measurement of the volume or from the specific gravity and the weight of a known length of the specimen having a uniform cross-section.

The values may be obtained from a table giving the areas of segments of a unit circle for the ratio of the height of the segment to the diameter of the circle.

**6.4.12.3** When the conductor is large and the insulation thin, and when a portion of a sector of a circle has to be taken, the area shall be calculated as the thickness times the width.

This applies either to a straight test piece or to one stamped out with a die and assumes that corrugations have been removed.

**6.4.12.4** When the conductor is large and the insulation thick and when a portion of a sector of a circle has to be taken, the area shall be calculated as the proportional part of the area of the total cross-section.

**6.4.12.5** The dimensions of specimens to be aged shall be determined before the aging test.

### 6.4.13 Physical Test Procedures (See 6.4 for Test Samples and Specimens)

#### 6.4.13.1 TEST TEMPERATURE

Physical test shall be made at a room temperature not less than 18°C (64°F) nor more than 28°C (82.4°F). The test specimens shall be kept at room temperature for not less than 30 minutes prior to the test.

#### 6.4.13.2 TYPE OF TESTING MACHINE

The testing machine shall be in accordance with 6.1 of ASTM D 412.

#### 6.4.13.3 TENSILE STRENGTH TEST

The tensile strength test shall be made with specimens prepared in accordance with 6.4.6 and 6.4.7. The length of all of the specimens for the test shall be equal. Gauge marks shall be 2 inches, when using 6 inch specimens, and 1 inch apart when using 4.5 inch specimens except that 1 inch gauge marks shall be used for polypropylene regardless of specimen length. Specimens shall be placed in the jaws of the testing machine with a maximum distance between jaws of 4 inches except 2.5 inches for polypropylene. The specimen shall be stretched at the rate of 20 inches per minute jaw speed until it breaks.

The tensile and elongation determinations for compounds for which the compound manufacturer certifies that the base resin content is more than 50 percent by weight of high density polyethylene (having a density of 0.926 g/cm$^3$ or greater), shall be permitted to be tested at a jaw separation rate of 2 inches per minute (51 mm per minute) as an alternate to 20 inches per minute (508 mm per minute).

Specimens shall break between the gauge marks and the tensile strength shall be calculated on the area of the unstretched specimen. Specimen length, gauge mark distance, and jaw speed shall be recorded with the results.

#### 6.4.13.4 SET TEST

The set test shall be made on an unstretched test specimen having a length of not less than 6 inches and marked with gauge marks 2 inches apart. The specimens shall be placed in the jaws of the testing machine, with a maximum distance between jaws of 4 inches, and shall be stretched at the rate of 20 inches per minute (jaw speed) until the gauge marks are 6 inches apart. The test specimen shall be held in the stretched position for 5 seconds, and the distance between gauge marks shall be determined 1 minute after the release of tension. The set is the difference between this distance and the original 2-inch gauge length, expressed as a percentage.

#### 6.4.13.5 ELONGATION TEST

Elongation at rupture shall be determined simultaneously with the test for tensile strength and on the same specimen.

The elongation shall be taken as the distance between the gauge marks at rupture less the original gauge length marked on the specimen. The percentage of elongation at rupture is the elongation divided by the original gauge length and multiplied by 100. Specimen length, gauge mark distance, and jaw speed shall be reported with the results.

#### 6.4.13.6 TENSILE STRESS TEST

The tensile stress test shall be made in conjunction with the tensile strength test by recording the load when the gauge marks indicate that the specimen is at its prescribed elongation. The tensile stress shall be calculated on the area of the unstretched specimen.

#### 6.4.13.7 TEAR TEST

The tear test shall be made on a minimum of six individual test specimens prepared in accordance with 6.4.10. The two halves of the split end of the test specimen shall be placed in the jaws of the testing machine and the jaws separated at the rate of 20 inches per minute. The tear resistance shall be determined by dividing the load in pounds required to tear the section by the thickness of the test specimen in inches. The average of the results obtained on all test specimens shall be considered as the value of the tear resistance.

#### 6.4.13.8 COLD-BEND TEST

The test specimen of the insulated conductor, without any further covering, shall be subjected to the specified

Copyright National Electrical Manufacturers Association
Provided by IHS under license with NEMA
No reproduction or networking permitted without license from IHS

Not for Resale

temperature for 1 hour and then bent to 180 degrees around a mandrel, having a diameter of eight times the diameter of the insulated conductor, immediately upon its removal from the cooling chamber. The bend shall be made at a uniform rate, and the time required shall not exceed 1 minute.

### 6.4.14 Aging Test

#### 6.4.14.1 AGING TEST SPECIMENS

Test specimens of similar size and shape shall be prepared from each sample selected in accordance with 6.4.4 and 6.4.5, three for the determination of the initial or unaged properties, and three for each aging test required for the grade of insulation or jacket being tested. One specimen of each three shall be tested and the other two held as spares except that, where only one sample is selected, all three specimens shall be tested and the average of the results reported.

In the case of wire and cable smaller then 6 AWG having an insulation thickness less than 0.090 inch (2.29 mm), the insulation shall be subjected to the aging condition with the conductor removed and each end of the specimen suitably plugged.

In the case of wire and cable 6 AWG and larger or with an insulation thickness of 0.090 inch or greater, samples shall be cut from the insulation with a cross-section not greater than 0.025 square inch.

Die-cut specimens shall be smoothed before being subjected to the accelerated aging tests wherever the thickness of the specimen will be 0.090 inch or greater before smoothing.

Simultaneous aging of different compounds should be avoided. For example, high-sulfur compounds should not be aged with low-sulfur compounds and those containing antioxidants should not be used with those containing no antioxidant. Some migration is known to occur.

The test specimens shall be suspended vertically in such a manner that they are not in contact with each other or with the sides of the oven.

The aged specimens shall have a rest period of not less than 16 hours nor more than 96 hours between the completion of the aging tests and the determination of physical properties. Physical tests on both the aged and unaged specimens shall be made at approximately the same time.

#### 6.4.14.2 OXYGEN PRESSURE TEST

The test specimens shall be heated in an atmosphere of oxygen, at a pressure of 290 to 310 pounds per square inch, at the temperature and for the period specified for the grade of insulation or jacket being tested. The weight of insulation or jacket in the bomb shall be not more than 2 grams of actual rubber or oxidizable substance per cubic inch of bomb space. The bomb pressure shall be reduced at a uniform rate requiring at least 5 minutes to reach atmospheric pressure at which time the specimens shall be removed. The bomb temperature shall be recorded automatically on a chart, and controlled to ± 1°C.

#### 6.4.14.3 AIR OVEN TEST

The test specimens shall be heated at the required temperature for the specified period in an oven having forced circulation of fresh air. The oven temperature shall be recorded automatically on a chart, and controlled to ± 1°C.

#### 6.4.14.4 AIR PRESSURE HEAT TEST

The test specimens shall be heated in air, at a pressure of 77 to 83 pounds per square inch, at the temperature and for the period specified. This test shall be conducted in a steamjacketed bomb or other suitable and uniformly heated chamber. The bomb shall be so regulated that the temperature inside the chamber shall reach the test temperature within 15 minutes after inserting the test specimens. The air shall be substantially free from oil and moisture. The weight of the actual rubber or oxidizable substance in the bomb shall not be more than 2 grams per cubic inch of bomb space. The bomb pressure shall be reduced at a uniform rate, requiring at least 5 minutes to reach atmospheric pressure, at which time the specimens shall be removed. The bomb temperature shall be recorded automatically on a chart, and controlled to ± 1°C.

#### 6.4.14.5 OIL IMMERSION TEST FOR CROSS-LINKED JACKETS

The test specimens shall be completely immersed in ASTM Oil No. 2, described in Table 1 of ASTM D 471, at 121°C ± 1°C for 18 hours. The specimens shall then be removed from the oil, blotted lightly to remove excess oil, and suspended in air at room temperature for 4 ± 1/2 hours, after which they shall be tested for tensile strength and elongation.

The calculations for tensile strength shall be based on the cross-sectional area of the specimen obtained before immersion in oil. Likewise, the elongation shall be based on the gauge marks applied to the specimen before immersion in the oil.

#### 6.4.14.6 OIL IMMERSION TEST FOR THERMOPLASTIC JACKETS

The test specimens shall be immersed in ASTM Oil No. 2, described in Table 1 of ASTM D 471, at the specified temperature for the specified time. At the end of this time, the specimens shall be removed from the oil, blotted to remove excess oil and allowed to rest at room temperature for a period of 16 to 96 hours. The tensile strength and elongation of the specimens shall then be determined in accordance with 6.4.13 at the same time that the original properties are determined.

The calculations for tensile strength shall be based on the cross-sectional area of the specimen obtained before im-

Copyright National Electrical Manufacturers Association
Provided by IHS under license with NEMA
No reproduction or networking permitted without license from IHS

Not for Resale

STD.NEMA WC 58-ENGL 1991 ■ 6470247 0512559 970 ■



mersion in oil. Likewise, the elongation shall be based on the gauge marks applied to the specimen before immersion in the oil.

### 6.4.15 Physical Tests for Semiconducting Material Intended for Extrusion

#### 6.4.15.1 TEST SAMPLE

One test sample shall be molded from each lot of semiconducting material intended for extrusion on the cable.

#### 6.4.15.2 TEST SPECIMENS

For each test three test specimens, each approximately 6 inches long and not greater than 0.025 square inch in cross-section, shall be cut out of the test sample with a die. All three test specimens shall be tested and the results averaged.

#### 6.4.15.3 ELONGATION

This test shall be conducted in accordance with 6.4.13 and 6.4.14.

#### 6.4.15.4 BRITTLENESS TEST

This test shall be conducted in accordance with ASTM D 746, using Specimen A.

### 6.4.16 Retest for Physical and Aging Properties and Thickness

If any test specimen fails to meet the requirement of any test, either before or after aging, that test shall be repeated on two additional specimens taken from the same sample. When the tear resistance of the first set of six specimens fails to meet the requirements, two additional sets of test specimens shall be tested. Failure of either of the additional specimens shall indicate failure of the sample to conform to this standard.

If the thickness of the insulation or of the jacket of any coil or reel is found to be less than the specified value, that coil or reel shall be considered as not conforming to this standard, and a thickness measurement on each of the remaining coils or reels shall be made.

When ten or more samples are selected from any single lot, all coils or reels shall be considered as not conforming to this standard if more then 10 percent of the samples fail to meet the requirements for physical and aging properties and thickness. If 10 percent or less fail, each coil or reel shall be tested and shall be judged upon the results of such individual tests. Where the number of samples selected in any single lot is less than ten, all coils or reels shall be considered as not conforming to this standard if more than 20 percent of the sample fail. If 20 percent or less fail, each coil, reel, or length shall be tested and shall be judged upon the results of such individual tests.

## 6.5 SHORT-TIME DIELECTRIC STRENGTH TEST ON INSULATED CONDUCTORS

**6.5.1** This test is applicable only to power cable rated 5001 volts and above. The test sample shall be taken either from the cable in process or from the completed cable. One test sample shall be taken for the first 5000 to 20,000 feet of each cable construction and one additional sample for each additional 100,000 feet. The gross length of each sample shall be 17 feet for cables rated 15,000 volts and below and 22 feet for cable rated above 15,000 volts.

**6.5.2** Ten feet of the test sample, with any outer coverings removed except tape in which the insulation is crosslinked, shall be immersed in water at room temperature for at least 1 hour prior to making the test.

**6.5.3** After the sample has been immersed for at least 1 hour, it shall withstand for 5 minutes, a test voltage which is twice the test voltage given in Table 8-1.

The initially applied voltage shall be not greater than the rated voltage, and the rate of increase shall be approximately uniform and not over 100 percent in 10 seconds nor less than 100 percent in 60 seconds.

**6.5.4** The test shall be made on the same sample used in 6.5.1. Starting with the voltage at which the test described in 6.5.3 was made, the voltage shall be raised in steps of approximately 20 percent of the immediately preceding voltage until failure occurs, the voltage to be kept constant at each step for 5 minutes.

NOTE: The test described in 6.5.4 should be used only as an information test.

## 6.6 COLD BENDING AND LONG-TIME DIELECTRIC STRENGTH TEST

**6.6.1** This test is applicable only to power cable rated 5001 volts and above. The test sample shall be taken from the completed cable. One test sample (see Tables 7-1 and 8-1) shall be taken from the first 5000 to 20,000 feet of each cable construction and one additional sample for each additional 100,000 feet. The gross length of each sample shall be 13 feet for cable rated 15,000 volts and below and 17 feet for cables rated above 15,000 volts.

**6.6.2** Ten feet of the test sample shall be subjected to a temperature of minus 10°C for not less than 2 hours, and then immediately bent 180 degrees around a cylindrical mandrel. It shall be straightened and bent 180 degrees around the mandrel in the opposite direction. The cable shall be so held during the bending operations that it cannot revolve around its own axis.

Copyright National Electrical Manufacturers Association
Provided by IHS under license with NEMA
No reproduction or networking permitted without license from IHS
Not for Resale

**6.6.3** The diameter of the mandrel shall be in accordance with Table 6-6.

**Table 6-6**
**MANDREL SIZE FOR COLD BENDING AND LONG-TIME DIELECTRIC STRENGTH TEST**

| Thickness of Conductor Insulation, inch | Mandrel Diameter as a Multiple of Outside Diameter of the Cable | |
|---|---|---|
| | Up through 500 kcmil | Over 500 kcmil |
| .150–.190 | 8 | 10 |
| .205–.310 | 10 | 12 |
| .330–and over | 12 | 12 |

**6.6.4** Immediately following the bending test and while still bent, the cable shall withstand the applicable alternating-current test voltage, given in the applicable table in sections 7 and 8, continuously for 2 hours between each conductor and all of the other conductors and also between each conductor and an enclosing grounded surface.

Three-conductor cables shall be tested with grounded three-phase voltage or with single-phase voltage. For shielded cables, the shields shall be grounded. Non-shielded cables shall be tested in a grounded water bath or in a foil.

## 6.7 CAPACITY AND POWER FACTOR TESTS

**6.7.1** This test is applicable only to power cables rated 5001 volts and above. The test sample shall be taken from cable in the preliminary stage. One test sample shall be taken for the first 5000 to 20,000 feet of each cable construction and one additional sample for each additional 100,000 feet. The gross length of each sample shall be 13 feet for cables rated 15,000 volts and less and 17 feet for cables rated above 15,000 volts.

**6.7.2** The capacity and power factor shall be measured on suitable 60-hertz equipment after the test sample has been immersed in water at room temperature for at least 24 hours. The measurements shall be made at the rated voltage to ground of the cable under test.

## 6.8 OZONE RESISTING TEST

**6.8.1** The samples shall be taken from the completed cable. One sample (see Tables 7-1 and 8-1) shall be taken from the first 5000 to 20000 feet of each cable construction and one additional sample for each additional 100000 feet. The gross length of each sample shall be 7½ feet for cables rated 5000 volts and less and 10 feet for cables rated above 5000 volts.

### 6.8.2 Test Apparatus

Test apparatus shall consist of the following:

(A) A device for generating a controlled amount of ozone.

(B) A means for circulating ozonized air under controlled conditions of humidity and temperature through a chamber containing the specimens to be tested.

(C) A means for determining the percentage of ozone concentration (see 6.8.5).

The test apparatus shall be in accordance with Figure 6-2. Air flows from an air pump, or compressed air supply, through a series of chambers as indicated.

The acid drier consists of two 500-ml gas washing bottles, filled to 30 percent of capacity with suphuric acid ($H_2SO_4$) having a specific gravity of 1.84. In series with this is a second drier containing anhydrous calcium chloride or anhydrous calcium sulfate, and a U-tube hygrometer containing a small quantity of anhydrous copper sulfate, which is used as an indicator of moisture. The rate of air flow is indicated by a calibrated flow meter having a capacity of at least 25 cubic feet (0.708 cubic meters) per hour.

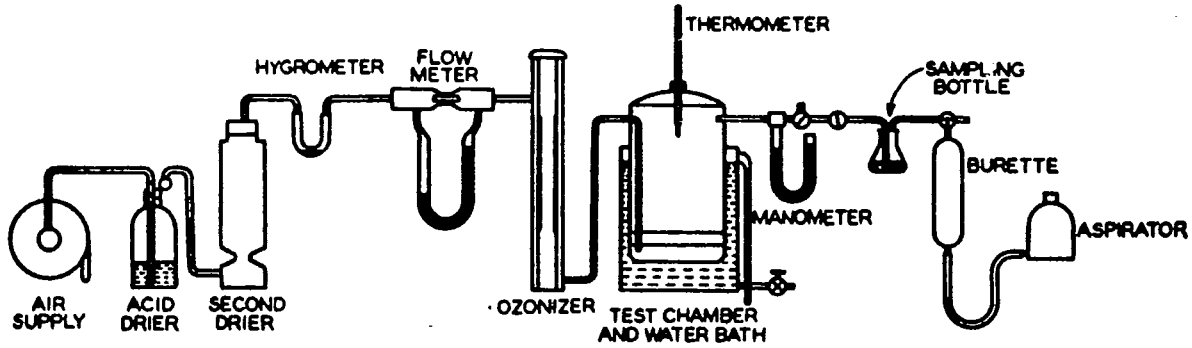


**Note—If the acid in the acid drier should carry over into the second drier, a scrubber bottle may be inserted between the first and second driers.**

**Figure 6-2**
**TYPICAL TEST APPARATUS FOR OZONE RESISTING TEST**

Copyright National Electrical Manufacturers Association
Provided by IHS under license with NEMA
No reproduction or networking permitted without license from IHS
Not for Resale

Ozonization of the air is accomplished in a generator consisting of a pair of concentric electrodes, separated by a thin glass dielectric, between which voltage may be applied. This generator may be conveniently supplied by a potential transformer which is equipped with a variable voltage control rated between 20 and 30 kilovolts.

The test chamber shall be of a material which is not attacked by ozone, and should be just large enough to accommodate the largest test specimens to be tested. Excessive size results in greater delay in obtaining the desired ozone concentration. A chamber 18 to 20 inches in length and having a capacity of 2000 to 5000 cubic inches will generally be required. A convenient form of test chamber is a glass jar having a full-size cover. This permits easy access to the interior and the inspection of specimens without opening the chamber during test.

Near the bottom of the test chamber a filter consisting of a layer of loose mineral wool, held between two perforated grills, is placed. The ozonized air is led from the generator to the space below this filter. Temperature control may be secured by keeping the test apparatus in an air conditioned room or by partially immersing the test chamber in a water bath, which may be connected to a hot-and-cold-water system or provided with thermostatically controlled electric heaters. A thermometer is inserted into the cover of the test chamber, with its bulb as near to the test specimens as practicable.

Discharge from the test chamber is accomplished by a double cock arrangement, one acting as a direct discharge into the outside atmosphere and the other, when normally closed, acting as a bypass test cock. A manometer is inserted in the outlet pipe to indicate pressure in the test chamber.

### 6.8.3 Test Specimens

**6.8.3.1** Two test specimens shall be selected from the accessible end of the reel or coil to be tested. Where protective coverings are applied, such coverings shall be removed when they are nonadherent to the insulation. When tapes or jackets are applied directly to the insulation prior to crosslinking or left in place during crosslinking and are consequently adherent to the insulation in the completed cable, they shall not be removed. Such adherent coverings, regardless of the type of ozone-resisting insulation used on the conductor, shall show no cracks after exposure for 3 hours to an ozone concentration of not less than 0.010 nor more than 0.015 percent by volume.

**6.8.3.2** Each test specimen shall be free from mechanical defects, such as cuts, dents, tears, loose threads, etc. One specimen shall be bent, in the direction and plane of the existing curvature of the cable, around a mandrel and through the specified angle, in accordance with 6.8.3.3 and 6.8.3.4. The other specimen shall be bent similarly, but in the opposite direction and plane of the existing curvature.

**6.8.3.3** Specimens shall be bent, without twisting, at room temperature but not less than 20°C (68°F) around a brass aluminum or suitably treated wooden mandrel having the diameter shown in Table 6-7.

**Table 6-7**
**MANDREL SIZE FOR OZONE RESISTANCE TEST**

| Outside Diameter of Individual Conductor, inches | Mandrel Diameter as a Multiple of the Outside Diameter of the Individual Conductor |
|---|---|
| Less than 0.500 | 4 |
| 0.500 but less than 0.750 | 5 |
| 0.750 but less than 1.250 | 6 |
| 1.250 but less than 1.750 | 8 |
| 1.750 and greater | 10 |

**6.8.3.4** The specimen shall be bent in accordance with Figure 6-3 and shall be bound with twine or tape where the ends cross. If the specimen is too rigid to permit crossing of the ends, it may be bent in the form of a U and tied so that at least a 180-degree bend of the proper diameter is obtained.

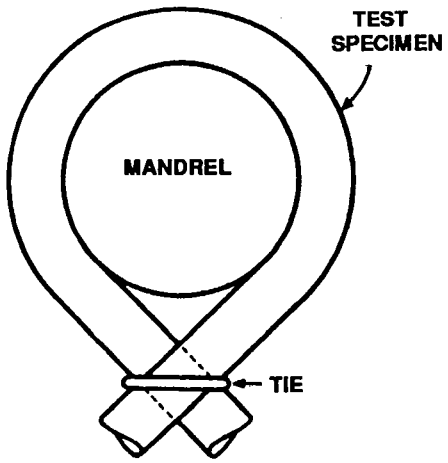


**Figure 6-3**
**SPECIMEN BENT AROUND MANDREL FOR OZONE RESISTING TEST**

Copyright National Electrical Manufacturers Association
Provided by IHS under license with NEMA
No reproduction or networking permitted without license from IHS
Not for Resale

**6.8.3.5** The surface of each specimen shall be wiped with a clean cloth to remove dirt or moisture. The bent specimens on their mandrels shall be placed in a desiccator for 30 to 45 minutes to remove surface moisture prior to being placed in the test chamber.

### 6.8.4 Test Procedure

**6.8.4.1** Air shall be circulated through the test apparatus at a constant rate of flow for at least 15 minutes prior to bending the specimens. The flow shall between 10 and 20 cubic feet per hour. The manometer shall indicate a pressure of approximately 1/2 inch of water above atmospheric pressure in the test chamber. After ozone has been generated for at least 15 minutes, the percentage of ozone concentration shall be checked in accordance with 6.8.5. The voltage of the ozone generator, or the rate of flow of air, shall then be regulated to provide the ozone concentration specified for the type of cable being tested. The temperature of the air in the test chamber shall be 25°C ± 2°C. When constant conditions are obtained, the test apparatus shall be operated in equilibrium for at least 45 minutes. The test specimens shall be placed in the test chamber, taking care not to handle the test section. The specimens shall be supported in an approximately vertical plane, midway between the top and bottom, with the free ends down to but not touching the bottom.

**6.8.4.2** After 3 hours, the test specimens shall be removed from the chamber and examined by the unaided eye for cracks in the bent portion. Cracks occurring on the 180-degree sector, including the tie, that is, where the specimen is not curved to conform to the mandrel, shall be disregarded.

### 6.8.5 Determination of Ozone Concentration

#### 6.8.5.1 CHEMICAL ANALYSIS

##### 6.8.5.1.1 Starch Indicator Solution

Stir 1 gram of soluble starch into 40 milliliters of cold water to about 200 milliliters, and add 2 grams of crystallized zinc chloride. Let the solution settle and then pour off the supernatant liquid for use. Renew every 2 or 3 days. A fresh solution of 1 gram of soluble starch in 100 milliliters of boiling water may be also used. When using these starch solutions as an indicator, add a few drops of acetic acid (10 percent) to the solution being titrated.

##### 6.8.5.1.2 Standard Iodine Solution

Place 2 grams of potassium iodide (KI) and 10 milliliters of water in a weighing tube, and weigh the tube and solution. Add iodine directly to the solution in the weighing tube on the balance pan until the total iodine in solution is about 0.1 gram. Accurately weigh the solution with the added iodine. Determine the amount of iodine added to the solution. Remove the weighing tube and pour the solution into a beaker. Wash the weighing tube held over the beaker with distilled water and pour the solution from the beaker into a volumetric flask. Rinse the beaker into a 1000-milliliter volumetric flask with distilled water, and dilute the solution in the flask to 1 liter. This solution is fairly stable if kept in cool, dark place in a well-stoppered brown bottle.

##### 6.8.5.1.3 Sodium Thiosulfate Solution

Prepare a sodium thiosulfate ($Na^2S^2O^3$) solution of approximately the same strength as the standard iodine solution by placing about 0.24 gram of $Na^2S^2O^3$. $5H^2O$ in a 1000 milliliter volumetric flask and diluting to 1 liter. Since this solution gradually loses its strength, standardize it against the standard iodine solution on the day tests are run. The method for calculating the strength of the $Na^2S^2O^3$ solution is described in 6.8.5.1.8.

##### 6.8.5.1.4 Potassium Iodide Solution

Dissolve about 20 grams of pure KI in 2 liters of water.

##### 6.8.5.1.5 Acetic Acid (10 Percent)

##### 6.8.5.1.6 Collection of Sample

Place a 100-milliliter portion of KI solution (1 percent), slightly acidified by a few drops of acetic acid, in the sampling bottle and connect the latter to the sampling cock and gas burette as shown in Figure 6-2. Open the two-way stopcock on the burette to the air and fill the burette to the mark with water by lifting the aspirator bottle. Close the stopcock to the air and open it to the sampling bottle, and then open the sampling cock on the test chamber. Lower the aspirator bottle until the burette is emptied. When this point is reached, 500 milliliters of gas will have bubbled through the KI solution. Then close the stopcocks and withdraw the bottle for titration.

##### 6.8.5.1.7 Analysis of Sample

Add to the solution in the bottle of few drops of freshly prepared starch solution as an indicator, and then titrate with the standardized $Na^2S^2O^3$ solution.

##### 6.8.5.1.8 Calculations

(Sodium Thiosulfate). Calculate the strength of the $Na^2S^2O^3$ solution as follows:

$$E = \frac{F \times C}{S}$$

Where:

- E = Iodine equivalence of $Na_2S_2O_3$ expressed as milligrams of iodine per milliliter of $Na_2S_2O_3$.
- F = Number of milliliters of the iodine solution.
- C = Concentration of iodine in milligrams per milliliter
- S = Number of milliliters of $Na_2S_2O_2$ used to titrate the solution.

Copyright National Electrical Manufacturers Association
Provided by IHS under license with NEMA
No reproduction or networking permitted without license from IHS
Not for Resale

**Ozone.** Since 1 milligram of iodine is equivalent to 0.1 milliliter of ozone at room temperature and pressure (within the accuracy of this method of analysis at average room temperature and pressure), the ozone may be calculated as follows:

$$O = E \times 0.1$$

Where:

O = Number of milliliters of ozones at room temperature and pressure equivalent to 1 ml of $Na_2S_2O_3$ solution is used.

E = Iodine equivalent of $Na_2S_2O_3$, expressed as milligrams of iodine per milliliter of $Na_2S_2O_3$.

Then:

$$\text{Percentage of ozone} = \frac{S \times O}{M} \times 100$$

Where:

S = Number of milliliters of $Na_2S_2O_3$ used to titrate the solution.

O = Number of milliliters of ozone at room temperature and pressure equivalent to 1 ml of $Na_2S_2O_3$ solution used.

M= Number of milliliters of the sample collected.

### 6.8.5.2 DIRECT MEASUREMENT WITH AN OZONOMETER

As an alternative to the chemical analysis described in 6.8.5.1, the ozone concentration may be measured directly with an ozonometer. This test method is based on the absorption of 2537 A (Angstrom unit) radiation by ozone. The equipment shall be composed of a source of 2537 A radiation and a photoelectric cell, located on the opposite sides of a measuring cell through which the ozone atmosphere to be measured is passed. The amount of 2537 A radiation that is available for activating the photoelectric cell is dependent on the concentration of ozone in the measuring chamber. The current generated in the photoelectric cell is amplified sufficiently to be read directly on a sensitive micrometer. The schematic arrangement of this apparatus shall be in accordance with Figure 6-4. The micrometer shall be marked to read directly in percentage of ozone. The calibration of this instrument shall be made by comparison with results obtained with the chemical methods given in 6.8.5.1. The advantage in using this method is that, after a calibration is obtained, the ozone concentration is continuously readable on the micrometer without drawing a sample from the test chamber and thus upsetting equilibrium.

## 6.9 ACCELERATED WATER ABSORPTION

### 6.9.1 General

No test sample shall be taken for 5000 feet or less. One test sample for each test shall be taken for the first 5001 to 20,000 feet of each cable construction, and one additional sample for each additional 100,000 feet. The gross length of each sample required by the electrical method shall be 15 feet and, by the gravimetric method, 11 inches.

These tests shall not be made on cables which have a nonconductive separator between the conductor and insulation, insulation less than 0.045 inch thick, or insulation having a covering which cannot be removed without damage to the insulation.

Test samples of the insulated conductor shall be taken after crosslinking and prior to the application of any covering, except that which may have been applied before crosslinking. Such coverings shall be removed before the test is made.

### 6.9.2 Electrical Method (EM-60)

The test shall be made at least 48 hours after crosslinking.

The middle 10 feet of the test sample shall be immersed in tap water which is maintained at 75°C ± 1°C for a period of 14 days, keeping the 2 1/2 foot portion of each end above water as leakage insulation. A tight fitting cover shall be placed directly above the water surface, with suitable watertight bushings for the ends of the sample. The water level shall be kept constant.

The capacitance of the insulation shall be determined at an average stress of 80 volts per mil at approximately 60 hertz after 1, 7, and 14 days immersion. The power factor of the insulation at average stresses of 80 and 40 volts per mil shall be determined after 1 and 14 days immersion. The increase in capacitance from 1 to 14 days and from 7 to 14 days shall be expressed as a percentage of the 1- and 7-day values, respectively. The power factor shall be expressed to the nearest 0.1 percent.

**Stability Factor.** The stability factor is the difference between the percentage power factor at 80 and 40 volts per mil after the test specimen has been immersed in water at 75°C ± 1°C for the specified time. The alternate to stability factor is the 14-day stability factor minus the 1-day stability factor.

The dielectric constant (specific inductive capacity) of the insulation at 60 hertz shall be calculated as follows:

$$\text{Dielectric constant} = 13600\ C \log_{10} \frac{D}{d}$$

Where:

C = Capacitance in microfarad of the 10 foot section.

D = Diameter over the insulation.

d = Diameter under the insulation.

Copyright National Electrical Manufacturers Association
Provided by IHS under license with NEMA
No reproduction or networking permitted without license from IHS

Not for Resale

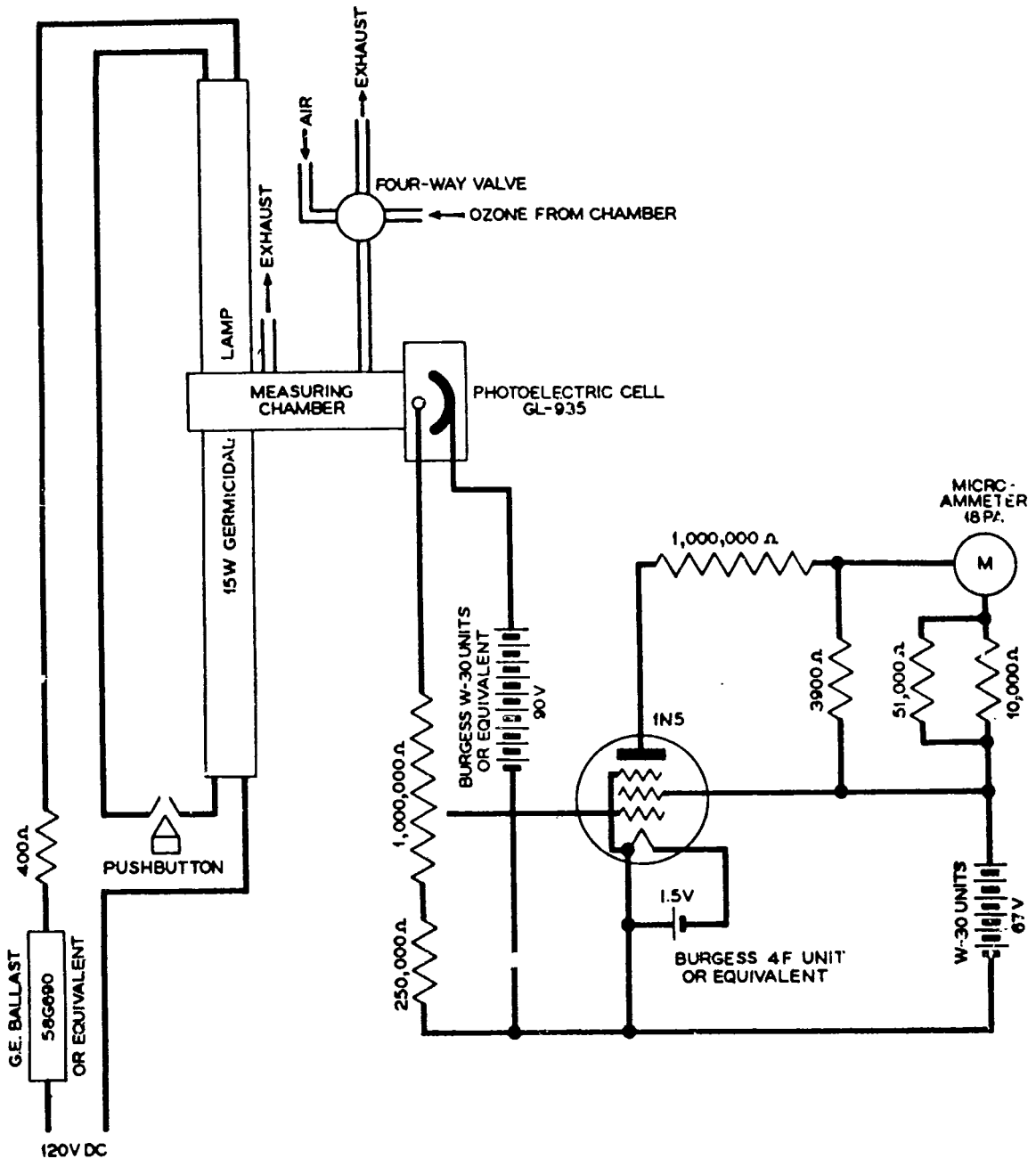


Note-Resistor values in micrometer shunt will vary with the meter used and with the concentration scale desired.

**Figure 6-4**
**ELECTRONIC OZONOMETER**

Copyright National Electrical Manufacturers Association
Provided by IHS under license with NEMA
No reproduction or networking permitted without license from IHS
Not for Resale

### 6.9.3 Gravimetric Method

An 11-inch test sample of the insulated conductor shall be taken if the weight of the sample is less than 100 grams. For heavier samples, a segment of the insulation 4 inches long shall be cut from the insulated conductor and smoothed to remove all corrugations. The surface of the test sample or segment shall be cleaned by scrubbing with a lintless cloth moistened with water, dried for 48 hours in a vacuum of 5 mm of mercury or less over calcium chloride at 70°C ± 2°C and then weighed to the nearest milligram, Weight A. The area, S, shall be the number of square inches in a 10-inch length of the insulated wire, or the total area in square inches of the segment.

The insulated wire sample shall be bent in the shape of a U, around a mandrel having a diameter not less than three times the diameter of the sample and the ends shall be inserted in tightly fitting holes in the cover of a 1-pint glass jar so that 10 inches of the sample will be immersed when the jar is completely filled with water and the cover applied.

The test segment shall be completely immersed.

The test sample or segment shall be immersed for 168 hours in freshly boiled distilled water which is maintained at 70°C ± 1°C. The level of the water shall be cooled to room temperature. The sample or segment shall be removed and the adhering water shaken off. It shall be blotted lightly with lintless cloth and weighed within 3 minutes to the nearest milligram, Weight B.

The sample or segment shall be dried in a vacuum of 5 millimeter of mercury or less, over calcium chloride at 70°C ± 2°C, for 48 hours and then weighed to the nearest milligram, Weight C. The water absorption shall be calculated in terms of milligrams per square inch of surface as follows:

$$\text{Water absorption (if C is less than A)} \frac{B - C}{S}$$

$$\text{Water absorption (if C is greater than A)} \frac{B - A}{S}$$

Where

A = Weight of the sample or segment in milligrams before immersion.

B = Weight of the sample or segment in milligrams after immersion.

C = Weight of the sample or segment in milligrams after during in vacuum.

S = Total area in square inches of the sample or segment.

## 6.10 SURFACE RESISTANCE

A sample of the completed cable shall be wiped with a clean absorbent cloth. Two one inch (1") wide foil electrodes spaced one-half inch (1/2") apart shall be wound around the cable surface. A 200-500 volt direct current potential shall be applied between the two electrodes and the resistance shall be measured in accordance with ASTM D 257. This test shall be made at room temperature.

## 6.11 THICKNESS OF TAPES

### 6.11.1 Compound-filled Tape

Compound-filled tape, when not bonded to the underlying material, shall be removed from no less than 6 inches of the insulated conductor or assembled core. The thickness of the tape shall be determined by means of a dial micrometer having a presser foot 0.25 inch ± 0.01 inch in diameter and exerting a total force of 3.0 ± 0.1 ounces, applied by means of a weight. Five readings shall be taken at different points on the sample, and the average of these readings shall be taken as the thickness of the tape.

### 6.11.2 Metallic Shielding Tape or Steel Tape

Metallic shielding tape or steel tape shall be removed from no less than 6 inches of the insulated conductor or assembled core. The thickness of the tape shall be measured by means of a micrometer caliper having flat surfaces on both the anvil and the end of spindle and graduated to read directly at least to mils, and preferably, to tenths of a mil. Five readings shall be taken at different points on the sample, and the average of these readings shall be taken as the thickness of the tape.

## 6.12 HEAT DISTORTION

### 6.12.1 Test Specimen

A sample (see 6.4.5) of the jacket approximately 8 inches (203 mm) long shall be prepared to have a thickness of 0.050 ± .010 inch and smooth surfaces. From this sample, three test specimens (see 6.4.6), each 1 inch long and 9/16 inch ± 1/16 inch wide, shall be prepared. Where the diameter of the cable does not permit the preparation of a specimen 9/16 inch wide, the specimens shall be taken from a molded sheet of the same compound.

The thickness of each specimen, $T_1$, shall be measured with a Randall & Stickney, or equivalent, gauge having a 3/8-inch foot with no loading other than the 35 grams of the gauge.

### 6.12.2 Test Procedure

Each test shall be completed within 3 hours.

The Randall & Stickney (or equivalent) gauge, with a load of 2000 grams on the foot shall be placed in an oven which is preheated to the specified temperature. At the end of 1 hour, the test specimen shall be placed in the oven, and both the gauge and the test specimen shall remain in the oven for 1 hour.

At the end of this 1-hour period, the specimen shall be placed directly under the foot of the gauge and allowed to remain in the oven under load for 1 hour at the specified temperature.

At the end of this period, the thickness, $T_2$, shall be read on the dial of the gauge.

Copyright National Electrical Manufacturers Association
Provided by IHS under license with NEMA
No reproduction or networking permitted without license from IHS

Not for Resale

The distortion shall be calculated as follows:

$$\text{Distortion, percent} = \frac{T_1 - T_2}{T_1} \times 1100$$

### 6.12.3 Heat Distortion for Cross-Linked Polythylene

#### 6.12.3.1 TEST SPECIMEN

##### 6.12.3.1.1 Insulated Conductors 4/0 AWG and Smaller

The initial diameter of a 1-inch specimen of the insulated conductor shall be measured with a micrometer caliper having a flat surface on both the anvil and spindle. The diameter of the uninsulated conductor shall be measured.

The thickness, $T_1$, shall be calculated as follows:

$$T_1 = \frac{D - C}{2}$$

Where:

$T_1$ = Thickness prior to the heat distortion test.
D = Initial diameter of the insulated conductor.
C = Diameter of the uninsulated conductor.

##### 6.12.3.1.2 Insulated Conductors Larger than 4/0 AWG

A sample of insulation approximately 8 inches long shall be prepared to have a thickness of .050 ± .010 inch and smooth surfaces. From this sample, test specimens (see 6.4.4 and 6.4.5) 1 inch long and 9/16 inch ± 1/16 inch wide shall be prepared.

The thickness of the specimen, $T_1$, shall be measured with a Randall & Stickney (or equivalent) gauge, having a 3/8-inch foot with no loading other than the 85 grams of the gauge.

### 6.12.4 Test Procedure

The following steps shall be completed in 3 hours. A Randall & Stickney (or equivalent) gauge, with a load as indicated in Table 6-8 on the foot, shall be placed in an oven which is preheated to the specified temperature. At the end of 1 hour, the test specimen shall be placed in the oven, and both the gauge and the test specimen shall remain in the oven for 1 hour. At the end of this 1-hour period, the specimen shall be placed directly under the foot of the gauge and allowed to remain in the oven under load for 1 hour at the specified temperature.

At the end of this period, the dial of the gauge shall be read for one of the following:

A. The value of F for insulated conductors 4/0 AWG and smaller.

The thickness, T2, shall then be calculated as follows:

$$T_2 = \frac{F - C}{2}$$

Where:

$T_2$ = Thickness after the heat distortion test.
F = Final outside diameter as read from the gauge.
C = Diameter of the uninsulated conductor.

B. The value of T2 for insulated conductors larger than 4/0 AWG.

The distortion shall be calculated as follows:

$$\text{Distortion, percent} = \frac{T_1 - T_2}{T_1} \times 100$$

**Table 6-8**
**LOAD FOR HEAT DISTORTION TEST**

| Conductor Size, AWG | Load on Gauge, Grams |
|---|---|
| 14-8 | 500 |
| 6-1 | 750 |
| 1/0-4/0 | 1000 |
| Smoothed samples from conductors larger than 4/0 AWG | 2000 |

### 6.13 HEAT SHOCK

Each sample of jacketed cable selected in accordance with Table 6-4 shall be wound tightly around a mandrel having a diameter in accordance with Table 6-9, held firmly in place, and subjected to a temperature of 121°C ± 1°C for 1 hour.

**Table 6-9**
**MANDREL SIZE FOR HEAT SHOCK TEST**

| Outside Diameter of Wire or Cable, Inches | Number of Adjacent Turns | Diameter of Mandrel as a Multiple of the Outside Diameter of Cable |
|---|---|---|
| 0.750 or less | 6 | 3 |
| 0.751-1.500 | 180-degree bend | 8 |
| 1.501 and larger | 180-degree bend | 12 |

**Table 6-10**
**MANDREL SIZE FOR COLD BEND TEST**

| Outside Diameter of Wire or Cable, Inches | Diameter of Mandrel as a Multiple of the Outside Diameter of Cable |
|---|---|
| 0.800 or less | 8 |
| 0.801 and over | 10 |

Copyright National Electrical Manufacturers Association
Provided by IHS under license with NEMA
No reproduction or networking permitted without license from IHS

Not for Resale

## 6.14 ABSORPTION COEFFICIENT

Test specimens (see 6.4.6) shall be prepared from test samples selected in accordance with Table 6-4. The absorption coefficient of jacket compounds shall be determined in accordance with ASTM D 3349.

## 6.15 COLD BEND

Each sample of completed cable selected in accordance with Table 6-4, shall be subjected to the specified temperature for 1 hour and then bent 180 degrees around a mandrel having a diameter in accordance with Table 6-10 immediately upon its removal from the cooling chamber. The bend shall be made at a uniform rate. The time required shall not exceed 1 minute.

## 6.16 ENVIRONMENTAL CRACKING

Except as otherwise specified in 6.16.1 and 6.16.2, the test shall be made in accordance with ASTM D 1693.

### 6.16.1 Test Specimens

Test specimens shall be prepared from test samples selected in accordance with Table 6-4. Three test specimens, each approximately 1.5 inch long, 0.5 inch wide and 0.125 inch thick, shall be molded from material taken from the completed cable. The temperature of the molded specimens shall be lowered at any suitable rate. A slit make with a razor blade, approximately 0.75 inch long and from 0.020 to 0.025 inch deep, shall be centrally located on one of the 1.5 inch by 0.5 inch surfaces.

### 6.16.2 Test Procedure

The specimens shall be bent with the slit on the outside and placed in a test tube 200 millimeters long and 32 millimeters in outside diameter. The cracking agent (Igepal CO-630, made by the GAF Corporation, or its equivalent) shall be added to completely cover the specimen. The test tube, suitably closed by means such as a foil-covered cork, shall be placed in an oven at 50° C± 1°C for 48 hours. At the end of this period, the specimens shall be removed, allowed to cool to room temperature, and inspected for cracking.

## 6.17 HOT CREEP TEST

The Hot Creep Test shall be determined in accordance with ICEA Publication T-28-562.

For all cables with conductors larger than 500 kcmil, and for all cables rated 28,000 volts or over, one sample shall be taken for orders of between 10,000 and 40,000 feet. One additional sample shall be tested for each additional sample shall be tested for each additional 30,000 feet or major fraction thereof.

For all cables rated 2001-25,000 volts, with conductor sizes 500 kcmil and less, one sample shall be taken for orders of between 25,000 and 100,000 feet. One additional sample shall be tested for each additional 100,000 feet or major fraction thereof.

For all cables rated 2000 volts or less, with conductor sizes 500 kcmil and less, one sample shall be taken for orders of between 100,000 and 1,000,000 feet or major fraction thereof.

## 6.18 SOLVENT EXTRACTION

The solvent extraction shall be determined in accordance with ASTM D 2765.

## 6.19 VOLUME RESISTIVITY

### 6.19.1 Test Samples

One sample shall be taken from each 25,000 feet or major fraction thereof for each cable construction.

### 6.19.2 Conductor Stress Control

The sample shall be cut in half longitudinally and the conductor removed. Four silver-painted electrodes shall be applied to the conductor stress control layer. The two potential electrodes shall be at least 2 inches apart. A current electrode shall be placed at least 1 inch beyond each potential electrode. Where a high degree of accuracy is not required, the test may be made with only two electrodes spaced at least 2 inches apart.

The power of the test circuit shall not exceed 100 milliwatts. The test shall be made at the specified temperature with either alternating- or direct-current voltage.

The volume resistivity shall be calculated as follows:

$$P = \frac{R\,(D^2 - d^2)}{100\,L}$$

Where:

P = Volume resistivity in ohm-meters
R = Measured resistance in ohms.
D = Diameter over the conductor stress control layer in inches.
d = Diameter over the conductor in inches.
L = Distance between potential electrodes in inches.

### 6.19.3 Insulation Shield

Four silver-painted annular-ring electrodes shall be applied to the surface of the insulation shield layer. The two potential electrodes shall be at least 2 inches apart. A current electrode shall be placed at least 1 inch beyond each potential electrode. Where a high degree of accuracy is not required, the test may be made with only two electrodes spaced at least 2 inches apart.

The power of the test circuit shall not exceed 100 milliwatts. The test shall be made at the specified temperature with either alternating - or direct- current voltage.

The volume resistivity shall be calculated as follows:

$$P = \frac{2R\,(D^2 - d^2)}{100\,L}$$

Where:

P = Volume resistivity in ohm-meters.
R = Measured resistance in ohms.

Copyright National Electrical Manufacturers Association
Provided by IHS under license with NEMA
No reproduction or networking permitted without license from IHS
Not for Resale

STD.NEMA WC 58-ENGL 1991 ■ 6470247 0512562 465 ■



D = Diameter over the insulation shield layer in inches.
d = Diameter over the insulation in inches.
L = Distance between potential electrodes in inches.

## 6.20 STRIPPING TEST

Test samples shall be selected in accordance with Table 6-4. One test specimen shall be prepared from each sample. The test specimen shall be approximately 15 inches long, and all coverings over the extruded insulation shall be removed.

Starting at one end, two parallel longitudinal cuts, 1/2 inch apart and not less than 12 inches long, shall be made through the insulation shield. The specimen shall be rotated 180 degrees and two identical cuts shall be made starting from the same end. Each 1/2-inch strip shall be peeled back from the cut end for a distance of 2 inches.

The specimen shall be mounted horizontally in a testing machine and secured at each end. The 2-inch end of the peeled grip shall be gripped in the testing machine in such manner that it can be pulled at an angle of 90 degrees to the cable axis.

Each strip shall be peeled from the cable at a constant speed not exceeding 1/2 inch per second for a distance of not less than 10 inches.

The angle of pull shall be maintained as close as possible to 90 degrees throughout the test.

The tension necessary to remove the strip shall be monitored continuously and the minimum value shall be recorded.

## 6.21 RETESTS FOR TESTS COVERED BY 6.9 THROUGH 6.20 AND 6.25.

**6.21.1** If all the samples pass the applicable tests described in 6.9 through 6.20 and 6.25, the quantity of cable which they represent shall be considered as meeting the requirements of this standard.

**6.21.2** If any sample fails to pass these tests, the length of cable from which the sample was taken shall be considered as not meeting the requirements of this standard and another sample shall be taken from each of two other lengths of cable in the quantity of cable under test. If either of the second samples fails to pass the test, the quantity of cable shall be considered as not meeting the requirements of this standard. If both such second samples pass the test, the quantify of cable (except the length represented by the first sample) shall be considered as meeting the requirements of this standard.

**6.21.3** Failure of any sample shall not preclude resampling and retesting the length of cable from which the original sample was taken.

## 6.22 ELECTRICAL TEST ON COMPLETED CABLES—VOLTAGE TESTS

### 6.22.1 General

These tests consist of voltage tests on each length of completed cable. Except for the direct current spark test and the alternating current spark test, the voltage shall be applied between the conductor or conductors and the metallic sheath, metallic shield, metallic armor, or water, and the rate of increase from the initially applied voltage to the specified test voltage shall be approximately uniform and shall not be more than 100 percent in 10 seconds nor less than 100 percent in 60 seconds.

#### 6.22.1.1 CABLES WITHOUT METALLIC SHEATH, METALLIC SHIELD, OR METALLIC ARMOR

Except for the direct current spark test (see 6.22.5) and the alternating current spark test (see 6.22.4), single-conductor cables of this type, which are twisted together into an assembly of two or more conductors without an overall jacket or covering, shall be immersed in water for at least 1 hour and tested while still immersed; and other single-conductor and multiple-conductor cables of this type shall be immersed in water for at least 6 hours and tested while still immersed. Each insulated conductor shall be tested against all other conductors connected to the grounded water tank.

#### 6.22.1.2 CABLES WITH METALLIC SHEATH, METALLIC SHIELD OR METALLIC ARMOR

All cables of this type shall be tested with the metallic sheath, shield, or armor grounded, without immersion in water, at the test voltage specified. For cables having a metallic sheath, shield or armor over the individual conductor(s), the test voltage shall be applied between the insulated conductor(s) and ground. For multiple conductor cables with nonshielded individual conductors having a metallic sheath, shield, or armor over the cable assembly, the test voltage shall be applied between each insulated conductor and all other conductors and ground.

### 6.22.2 Alternating-Current Voltage Test

This test shall be made with an alternating potential from a transformer and generator of ample capacity, but in no case less than 5 kilovoltamperes. The frequency of the test voltage shall be nominally between 25 and 60 hertz and shall have a wave shape approximating a sine wave as closely as possible.

The initially applied alternating-current test voltage shall be not greater than the rated alternating current voltage of the cable under test.

The duration of the alternating-current voltage test shall be 5 minutes.

Copyright National Electrical Manufacturers Association
Provided by IHS under license with NEMA
No reproduction or networking permitted without license from IHS
Not for Resale

### 6.22.3 Direct-Current Voltage Test

This test is applicable to cables without insulation shield rated up through 5000 volts, and to all cables rated 5001 volts and above, and shall be made after the insulation resistance test described in 6.23. The equipment for the direct-current voltage test shall consist of a battery, generator, or suitable rectifying equipment, and shall be of ample capacity.

The initially applied direct-current voltage shall be no greater than 3.0 times the rated alternating current voltage of the cable.

The duration of the direct-current voltage test shall be 15 minutes for cables with insulation shield and 5 minutes for cables without insulation shield.

### 6.22.4 Alternating-Current Spark Test

#### 6.22.4.1 APPLICATION

This test shall apply to single-conductor cable and assemblies of single-conductor cables rated 0 through 2000 volts.

This test shall not apply to:

(A) Multiconductor cables other than assemblies of single-conductor cables.
(B) Cables with insulation shield.
(C) Cables with metallic sheath or armor.
(D) Assemblies containing insulated conductors.
(E) Cables rated above 2000 volts.

#### 6.22.4.2 TEST APPARATUS

Test apparatus shall consist of:

(A) A source of single-phase, alternating-current potential, capable of maintaining the required voltage under all normal leakage current conditions.
(B) An electrode capable of maintaining contact, throughout its length, with the periphery of the cable under test.
(C) A means of measuring voltage between electrode and ground.
(D) A means of indicating a fault (failure).

#### 6.22.4.3 TEST PROCEDURE

One side of the potential source shall be connected to the electrode and the other side of the potential source shall be connected to ground. The conductor(s) in the cable shall be tested to assure continuity when grounded at one or both ends. All ground connections shall be bonded (common). The fault indicator shall be connected to indicate abnormal current between electrode and ground.

After the specified voltage is applied, the entire length of cable shall be passed through the electrode in a manner, and at a speed, such that every section of cable surface will have maintained electrode contact for not less than 18 positive and negative voltage crests.

The maximum speed of the cable under test may be determined by:

$$MS = \frac{5}{9} \times F \times EL$$

Where:

MS = Maximum speed in feet per minute
F = Frequency in Hertz
EL = Electrode length in inches

#### 6.22.4.4 FAILURE

Any indication by the fault indicator shall constitute a failure.

### 6.22.5 Direct-Current Spark Test

This test is applicable to single-conductor cables, and assemblies of insulated single-conductor cables, without insulation shield, and without metallic sheath or metallic armor, rated 2000 volts or less. The equipment for the direct-current spark test shall consist of a direct-current sparker of ample voltage and a suitable electrode. The sparker shall be capable of maintaining the specified test voltage under all normal conditions of leakage current. The voltage shall be applied between the outside surface of the cable and the conductor(s) for not less than 0.05 second. The conductor(s) shall be grounded.

The electrode shall make contact with the entire exposed surface of a single-conductor cable and of an assembly of twisted single-conductor cables.

Where an assembly of twisted single-conductor cables is subjected to the direct-current spark test, the individual conductor shall be similarly tested prior to assembly.

### 6.22.6 Voltage Tests After Installation

If voltage tests are made after installation, they shall be made immediately. The test voltage shall be direct-current voltage as given in Table 6-11 and shall be applied in accordance with 6.22.1 and 6.22.3.

## 6.23 INSULATION RESISTANCE

### 6.23.1 Test Apparatus

The test apparatus shall be in accordance with ASTM D 257. The test potential shall be a steady source of 100 through 500 volts direct current.

### 6.23.2 Test Procedure

The insulation resistance shall be measured after the completed cable alternating-current voltage tests or before any direct current voltage tests specified in 6.22. Where the voltage tests are made on wire or cable immersed in water, the insulation resistance shall be measure while the cable is still immersed. Single-conductor cables shall be tested between the conductor and metallic sheath or water. Multiple-conductor cables with nonshielded conductors shall be tested between each conductor and all other conductors and sheath or water. Multiple-conductor cables with shielded conductors shall be tested between the con-

Copyright National Electrical Manufacturers Association
Provided by IHS under license with NEMA
No reproduction or networking permitted without license from IHS
Not for Resale

Table 6-11
d-c TEST VOLTAGES AFTER INSTALLATION, kV

| Rated Circuit Voltage, Phase to Phase, Volts | Conductor Size, AWG or kcmil | Test Voltage, kV 100 Percent Insulation Level | Test Voltage, kV 133 Percent Insulation Level |
|---|---|---|---|
| 2,001–5,000 | 8–1,000 | 25 | 25 |
| 5,001–6,000 | 6–1,000 | 35 | 35 |
| 8,001–15,000 | 2–1,000 | 55 | 65 |
| 15,001–5,000 | 1–1,000 | 80 | 100 |
| 25,001–28,000 | 1–1,000 | 85 | ... |
| 28,001–35,000 | 1/0–1,000 | 100 | ... |

ductor and shield. The conductor under test shall be connected to the negative terminal of the test equipment and readings shall be taken after an electrification of 1 minute.

Each coil, reel, or length of wire or cable shall have an insulation resistance, in megohms-1,000 feet, at a temperature of 15.6°C (60°F), of not less than the value of R calculated as follows:

$$R = K \log_{10} \frac{D}{d}$$

Where:

R = Insulation resistance in megohms-1000 feet.
K = Constant for the grade of insulation. (See Table 3-1)
D = Diameter over the insulation in inches
d = Diameter under the insulation in inches

If the temperature at the time of measurement differs from 15.6°C (60°F), the resistance shall be corrected to that at 15.6°C (60°F) by multiplying the measured value by the proper correction factor given in Table 6-12, using the coefficient (see 6.23.3) for the particular grade of insulation and temperature in question. The temperature of the water shall be not less than 10°C (50°F) nor more than 29.4°C (85°F).

### 6.23.3 Determination of Temperature Correction Factors for Insulation Resistance

Three samples, preferably of 14 AWG solid wire with a 0.045 inch wall of insulation, shall be selected as representative of the insulation under consideration. The samples shall be of sufficient length to yield insulation resistance values under 25,000 megohms at the lowest water bath temperature.

The three samples shall be immersed in a water bath equipped with heating, cooling, and circulating facilities, with the ends of the samples extended at least 2 feet above the surface of the water and properly prepared for minimum leakage. The samples shall be left in the water at room temperature for 16 hours before adjusting the bath temperature to 10°C, or before transferring the samples to a 10°C test temperature bath.

The resistance of the conductor shall be measured at suitable intervals until it remains unchanged for at least 5 minutes. The insulation will then be at the temperature of the bath as read on the bath thermometer. Insulation resistance shall then be measured in accordance with 6.23.2.

Each of the three samples shall be exposed to successive water temperatures of 10, 16, 22, 28, and 35°C and, returning, 28, 22, 16, and 10°C. Insulation resistance readings shall be taken at each temperature after equilibrium has been established.

The two sets of readings taken at the same temperature shall be averaged and, together with the reading at 35°C, plotted on semi-log paper. The insulation resistance value at 15.6°C (60°F) shall be read from the plot.

The 0.55°C (1°F) coefficient shall be calculated by dividing the insulation resistance at 15.6°C (60°F) by that at 16.1°C (61°F).

## 6.24 PARTIAL-DISCHARGE TEST PROCEDURE

Refer to ICEA Publication T-24-380.

## 6.25 METHOD FOR DETERMING PERMITTIVITY (S.I.C.) AND DIELECTRIC STRENGTH OF EXTRUDED NONCONDUCTING POLYMERIC STRESS CONTROL LAYERS

The test specimen shall be an 18 inch length of conductor over which .015 - .030 inch of nonconducting stress control material has been extruded.

The central 12 inch length shall be shielded using a silver-painted electrode (or equivalent) applied to the surface of the stress control material.

The capacity C, in picofarads, shall be measured at the required temperature using a suitable bridge and a 60 Hz potential. The specimen shall be held at the required temperature for at least 15 minutes prior to measurement.

The geometric capacitance $C_o$, in picofarads, shall be calculated for the 12 inch specimen as follows:

$$C_o = 7.354/\log_{10}(D/d)$$

Copyright National Electrical Manufacturers Association
Provided by IHS under license with NEMA
No reproduction or networking permitted without license from IHS

Not for Resale

The ratio of measured capacitance divided by the gemoetric capacitance, $C/C_o$, shall be the permittivity (S.I.C.) of the stress control material.

Following the capacitance measurement, and while the specimen is held at the required temperature, a 60 Hz alternating current potential shall be aplied between the conductor and the grounded shield (painted electrode), with an increasing rate of rise not in excess of 100 volts per second until dielectric failure occurs. The dielectric withstand stress, in volts per mil*, shall be calculated as follows:

$S = 2\ V/(D-d)\ 1000$

D and d in inches

V in volts, actual breakdown level

**Table 6-12**

**TEMPERATURE CORRECTION FACTORS FOR INSULATION RESISTANCE TO 15.6°C (60°F)**

| Temperature | | Coefficient for 1°F | | | | | | | | | |
|---|---|---|---|---|---|---|---|---|---|---|---|
| F | C | 1.03 | 1.04 | 1.05 | 1.06 | 1.07 | 1.08 | 1.09 | 1.10 | 1.11 | 1.12 |
| 50 | 10.0 | 0.75 | 0.68 | 0.62 | 0.56 | 0.51 | 0.46 | 0.42 | 0.38 | 0.35 | 0.32 |
| 51 | 10.6 | 0.77 | 0.70 | 0.65 | 0.59 | 0.54 | 0.50 | 0.46 | 0.42 | 0.39 | 0.36 |
| 52 | 11.1 | 0.79 | 0.73 | 0.68 | 0.63 | 0.58 | 0.54 | 0.50 | 0.47 | 0.43 | 0.40 |
| 53 | 11.7 | 0.82 | 0.76 | 0.71 | 0.67 | 0.62 | 0.58 | 0.55 | 0.51 | 0.48 | 0.45 |
| 54 | 12.2 | 0.84 | 0.79 | 0.75 | 0.70 | 0.67 | 0.63 | 0.60 | 0.56 | 0.54 | 0.51 |
| 55 | 12.8 | 0.87 | 0.82 | 0.78 | 0.75 | 0.71 | 0.68 | 0.65 | 0.62 | 0.60 | 0.57 |
| 56 | 13.3 | 0.89 | 0.86 | 0.82 | 0.76 | 0.76 | 0.74 | 0.71 | 0.69 | 0.66 | 0.64 |
| 57 | 13.9 | 0.92 | 0.89 | 0.87 | 0.84 | 0.82 | 0.80 | 0.78 | 0.76 | 0.73 | 0.71 |
| 58 | 14.4 | 0.94 | 0.93 | 0.91 | 0.90 | 0.88 | 0.86 | 0.85 | 0.83 | 0.82 | 0.80 |
| 59 | 15.0 | 0.97 | 0.96 | 0.96 | 0.95 | 0.94 | 0.93 | 0.92 | 0.91 | 0.90 | 0.89 |
| 60 | 15.6 | 1.00 | 1.00 | 1.00 | 1.00 | 1.00 | 1.00 | 1.00 | 1.00 | 1.00 | 1.00 |
| 61 | 16.1 | 1.03 | 1.04 | 1.05 | 1.06 | 1.07 | 1.08 | 1.09 | 1.10 | 1.11 | 1.12 |
| 62 | 16.7 | 1.06 | 1.08 | 1.10 | 1.13 | 1.15 | 1.17 | 1.19 | 1.21 | 1.24 | 1.27 |
| 63 | 17.2 | 1.09 | 1.13 | 1.16 | 1.19 | 1.23 | 1.26 | 1.30 | 1.34 | 1.38 | 1.42 |
| 64 | 17.8 | 1.13 | 1.17 | 1.22 | 1.26 | 1.31 | 1.36 | 1.41 | 1.47 | 1.53 | 1.58 |
| 65 | 18.3 | 1.16 | 1.22 | 1.28 | 1.34 | 1.40 | 1.47 | 1.54 | 1.62 | 1.70 | 1.78 |
| 66 | 18.9 | 1.20 | 1.27 | 1.35 | 1.42 | 1.50 | 1.59 | 1.69 | 1.78 | 1.88 | 1.98 |
| 67 | 19.4 | 1.23 | 1.32 | 1.41 | 1.51 | 1.62 | 1.72 | 1.84 | 1.96 | 2.09 | 2.21 |
| 68 | 20.0 | 1.27 | 1.37 | 1.48 | 1.60 | 1.72 | 1.85 | 1.99 | 2.15 | 2.31 | 2.48 |
| 69 | 20.6 | 1.31 | 1.43 | 1.55 | 1.69 | 1.84 | 2.00 | 2.18 | 2.36 | 2.57 | 2.77 |
| 70 | 21.1 | 1.35 | 1.48 | 1.63 | 1.79 | 1.97 | 2.17 | 2.38 | 2.60 | 2.85 | 3.10 |
| 71 | 21.7 | 1.39 | 1.54 | 1.72 | 1.90 | 2.11 | 2.34 | 2.59 | 2.87 | 3.17 | 3.46 |
| 72 | 22.2 | 1.43 | 1.60 | 1.80 | 2.02 | 2.26 | 2.53 | 2.82 | 3.15 | 3.52 | 3.90 |
| 73 | 22.8 | 1.47 | 1.67 | 1.89 | 2.14 | 2.42 | 2.72 | 3.08 | 3.46 | 3.90 | 4.37 |
| 74 | 23.3 | 1.52 | 1.74 | 1.98 | 2.27 | 2.58 | 2.94 | 3.35 | 3.81 | 4.31 | 4.88 |
| 75 | 23.9 | 1.56 | 1.80 | 2.08 | 2.40 | 2.76 | 3.18 | 3.65 | 4.19 | 4.78 | 5.47 |
| 76 | 24.4 | 1.61 | 1.87 | 2.19 | 2.54 | 2.96 | 3.43 | 3.98 | 4.61 | 5.30 | 6.12 |
| 77 | 25.0 | 1.66 | 1.95 | 2.30 | 2.70 | 3.17 | 3.70 | 4.34 | 5.08 | 5.88 | 6.85 |
| 78 | 25.6 | 1.71 | 2.02 | 2.41 | 2.86 | 3.39 | 4.00 | 4.73 | 5.59 | 6.51 | 7.68 |
| 79 | 26.1 | 1.76 | 2.11 | 2.53 | 3.03 | 3.62 | 4.33 | 5.16 | 6.14 | 7.27 | 8.59 |
| 80 | 26.7 | 1.81 | 2.19 | 2.66 | 3.21 | 3.87 | 4.67 | 5.61 | 6.72 | 8.07 | 9.65 |
| 81 | 27.2 | 1.87 | 2.28 | 2.80 | 3.40 | 4.15 | 5.04 | 6.12 | 7.43 | 8.98 | 10.8 |
| 82 | 27.8 | 1.92 | 2.37 | 2.94 | 3.60 | 4.43 | 5.45 | 6.69 | 8.18 | 9.92 | 12.1 |
| 83 | 28.3 | 1.98 | 2.47 | 3.08 | 3.82 | 4.72 | 5.89 | 7.28 | 9.00 | 11.00 | 13.6 |
| 84 | 28.9 | 2.04 | 2.57 | 3.23 | 4.05 | 5.04 | 6.35 | 7.92 | 9.90 | 12.20 | 15.2 |
| 85 | 29.4 | 2.10 | 2.67 | 3.40 | 4.30 | 5.42 | 6.84 | 8.67 | 10.80 | 13.50 | 17.0 |

Copyright National Electrical Manufacturers Association
Provided by IHS under license with NEMA
No reproduction or networking permitted without license from IHS

Not for Resale

# Section 7
# SUPPLEMENT FOR PORTABLE POWER CABLES

The requirements of Sections 1 through 6 shall be met, except as modified in Section 7.

## 7.1 SCOPE

This section covers rubber insulated portable power cables with copper conductors in sizes 8 AWG and larger and with heavy-duty or extra-heavy duty jackets, for use on mining machines, dredges, shovels, and similar applications.

Cables with heavy-duty jackets are limited to a maximum outside diameter of 2.0 inches and do not include Types SH and SHD. Details of construction and dimensions for the voltage services at which these cables may be used are given in Tables 7-2 to 7-13 inclusive.

Recommended ampacities and voltage ratings are given in Appendix H. Recommended bending radii are given in Appendices F and G. Maximum emergency overload temperatures are given in Appendix B.

## 7.2 CABLE TYPES

The cables are of the following types:

**No Voltage Rating**

Single conductor nonshielded for temporary grounding (see 7.3.1.2)

**0.6kV**

Type G, two conductor flat (see 7.3.2.1.2)
Type G, three conductor flat ac power (see 7.3.3.2.1)
Type PG, two and three conductor (see 7.3.6.1)
Type PCG, two and three conductor (see 7.3.6.2)
Type W, five and six conductor (see 7.3.5.1)
Type G, five conductor (see 7.3.5.2)
Type G-GC, three conductor flat ac power cable (see 7.3.3.2.2)

**0.6 and 1.0kV**

Single conductor nonshielded (see 7.3.1.1)
Type W, two conductor flat (see 7.3.2.1.1)
Type G, two conductor round (see 7.3.2.2.2)
Type W, two conductor round (see 7.3.2.2.1)

**0.6, 1, 2, 3, and 5kV**

Type W, three conductor round (see 7.3.3.1.1)
Type G, three conductor round (see 7.3.3.1.2)
Type W, four conductor round (see 7.3.4.1)
Type G, four conductor round (see 7.3.4.2)

**3, 5, 8 and 15kV**

Type SHD, three conductor round (see 7.3.7.1)
Type SHD-GC, three conductor round (see 7.3.7.2)

**3, 5, 8, 15, 23 and 25kV**

Type SH, single conductor (see 7.3.7.3)

## 7.3 GENERAL DESCRIPTION OF COMPLETED CABLE

### 7.3.1 Single Conductor Cable, Nonshielded

These cables shall consist of an insulated conductor covered with a jacket.

#### 7.3.1.1 SINGLE CONDUCTOR PORTABLE POWER CABLE

These cables are described in Section 3.3. The cables shall be in accordance with Table 7-2.

#### 7.3.1.2 SINGLE CONDUCTOR GROUNDING CABLE

These cables are used for temporary grounding. The cables shall be in accordance with Table 7-13.

### 7.3.2 Two Conductor Cable

Two conductor cable shall be one of tow types: (1) flat twin or (2) two conductor round cable.

#### 7.3.2.1 TWO CONDUCTOR FLAT TWIN CABLE

##### 7.3.2.1.1 Without Grounding Conductor, Type W

These cables are described in Section 3.4.1.1. The cables shall be in accordance with Table 7-3.

##### 7.3.2.1.2 With Grounding Conductor, Type G

These cables are described in Section 3.4.1.2. The cables shall be in accordance with Table 7-3.

#### 7.3.2.2 TWO CONDUCTOR ROUND CABLE

##### 7.3.2.2.1 Without Grounding Conductors, Type W

These cables are described in Section 3.4.2.1. The cables shall be in accordance with Table 7-4.

##### 7.3.2.2.2 With Grounding Conductors, Type G

These cables are described in Section 3.4.2.2. The cables shall be in accordance with Table 7-4.

### 7.3.3 Three Conductor Cable

Three conductor cables shall be one of five types: (1) Type W, round construction, without grounding conductors; (2) Type G, round construction, with grounding conductors; (3) Type G, flat construction, with grounding conductors; (4) Type G-GC, round construction, with grounding conductors and ground check conductor; and (5) Type G-GC, flat construction with one ground conductor and one ground check conductor.

Copyright National Electrical Manufacturers Association
Provided by IHS under license with NEMA
No reproduction or networking permitted without license from IHS

Not for Resale

#### 7.3.3.1 THREE CONDUCTOR ROUND

##### 7.3.3.1.1 Three Conductor Round, Type W

These cables are described in Section 3.5.1. The cables shall be in accordance with Table 7-5.

##### 7.3.3.1.2 With Grounding Conductors, Type G

These cables are described in Section 3.5.2. The cables shall be in accordance with Table 7-5.

##### 7.3.3.1.3 With Grounding Conductors and Ground Check Conductor, Type G-GC

These cables are described in Section 3.5.5.1. The cables shall be in accordance with Table 7-5.

#### 7.3.3.2 THREE CONDUCTOR FLAT CABLE

##### 7.3.3.2.1 With Grounding, Type G

These cables are described in Section 3.5.3. The cables shall be in accordance with Table 7-6a.

##### 7.3.3.2.2 With Grounding Conductor and Ground Check Conductor, Type G-GC

These cables are described in Section 3.5.4. The cable shall be in accordance with Table 7-6b.

### 7.3.4 Four Conductor Cable

Four conductor cables shall be one of two types: (1) Type W, round construction, without grounding conductors, and (2) Type G, round construction, with grounding conductors.

#### 7.3.4.1 WITHOUT GROUNDING CONDUCTORS, TYPE W

These cables are described in Section 3.5.1. The cables shall be in accordance with Table 7-7.

#### 7.3.4.2 WITH GROUNDING CONDUCTORS, TYPE G

These cables are described in Section 3.5.2. The cables shall be in accordance with Table7-7.

### 7.3.5 Five and Six Conductors 600 Volt Cable

Five conductor cables shall be of two types: (1) Type W, without a grounding conductor, and (2) Type G, with a grounding conductor. Six conductor cables shall be Type W only.

#### 7.3.5.1 WITHOUT A GROUNDING CONDUCTOR, TYPE W

These cables are described in Section 3.6.1. The cables shall be in accordance with Table 7-10.

#### 7.3.5.2 WITH A GROUNDING CONDUCTOR, TYPE G

These cables are described in Section 3.6.2. The cables shall be in accordance with Table 7-10.

These cables shall be used for the internal wiring of equipment only.

### 7.3.6 Two and Three Conductor, 600 Volt, Type PG (Power Ground) Cable, and Type PCG (Power, Control, Ground) Cable

#### 7.3.6.1 TYPE PG WITH A GROUNDING CONDUCTOR

These cables are described in Section 3.7. The cables shall be in accordance with Table 7-11.

#### 7.3.6.2 TYPE PCG WITH TWO CONTROL CONDUCTORS AND ONE GROUNDING CONDUCTOR

These cables are described in Section 3.8. These cables shall be in accordance with Table 7-12.

### 7.3.7 Shielded Cables

Shielded cables require extra-heavy-duty jackets and shall be of the following types: (1) Type SHD three-conductor cables, (2) Type SHD-GC, three conductor cables, and (3) Type SH, single conductor cable.

#### 7.3.7.1 TYPE SHD THREE CONDUCTOR CABLE

These cables are described in Section 3.10.3.1. The cables shall be in accordance with Table 7-8.

#### 7.3.7.2 TYPE SHD-GC THREE CONDUCTOR CABLE

These cables are described in Section 3.10.3.2. The cables shall be in accordance with Table 7-8.

#### 7.3.7.3 TYPE SH, SINGLE CONDUCTOR CABLE

These cables are described in Section 3.10.1. The cables shall be in accordance with Table 7-9.

## 7.4 POWER CONDUCTORS

**7.4.1** Power conductors shall be made of annealed coated or uncoated copper wires and shall be in accordance with Section 2.

**7.4.2** The sizes, minimum number of wires and nominal diameters of the conductors shall be in accordance with Table 3-24.

## 7.5 CONTROL AND GROUND CHECK CONDUCTORS

**7.5.1** The control conductors for Type PCG cables and the ground check conductor for Type SHD-GC cables shall not be smaller than 10 AWG, with a minimum of 49 strands of annealed uncoated or coated copper wire. When a larger size ground check conductor is used, the number of wires shall not be less than a power conductor of the same size (see Table 3-24). A separator may be used over the conduc-

Copyright National Electrical Manufacturers Association
Provided by IHS under license with NEMA
No reproduction or networking permitted without license from IHS
Not for Resale

tor. In all other characteristics, the conductors shall meet the requirements of 7.4.

## 7.6 GROUNDING CONDUCTORS

**7.6.1** The grounding conductors, for all cables except flat twin Type G, flat three-condcutor Type G, Type PG and Type PCG cables, shall be annealed copper of not less than the size and number of wires in Table 3-24 for the corresponding power onductor sizes. In all other characteristics, they shall meet the requirements of 7.4. For round Type G cables, except five conductor Type G, and for Type SHD cables, except Type SHD-GC cables, the number of grounding conductors shall be the same as the number of power conductors. Five-conductor Type G cables shall have one grounding conductor. Type SHD-GC cables shall have two grounding conductors.

**7.6.2** The single grounding conductor for flat twin cables shall be composed of either uncoated copper with a separator, or of coated copper, and shall have a minimum cross-sectional area of 50 percent of the power conductor, but not less than the cross-sectional area for a 8 AWG conductor. The grounding conductor wires shall meet the requirements of 2.1.1.

**7.6.3** The single grounding conductor for Types PG, PCG and five conductor G cables shall meet the requirements of 7.4 and shall be of the size and stranding given in Tables 7-11, 7-12, and 7-10, respectively.

**7.6.4** The grounding conductors for Type G, PG, PCG and SHD cables shall be covered or uncovered. Any covering shall be green in color.

**7.6.5** The grounding conductors for flat three conductor ac cables shall be flat, rectangular or oval in shape, composed of either uncoated copper with a separator or of coated copper, and of the size given in Table 7-6a. The grounding conductor wires shall meet the requirements of 2.1.1.

## 7.7 CONDUCTOR STRESS CONTROL

**7.7.1** Cables rated higher than 2kV shall have conductor stress control layer in accordance with 3.14.

## 7.8 INSULATION

### 7.8.1 Power Conductors

The insulation shall be one of the types listed in Table 7-1. When specified, insulation may be colored for circuit identification in accordance with 3.18.

### 7.8.2 Control and Ground Check Conductors.

The insulation shall be one of the types listed in Table 7-1 or Table 3-2. Insulation shall be colored for circuit identification in accordance with 3.18.2.

### 7.8.3 Thickness of Insulation

**7.8.3.1** The average thickness of the insulation on the power conductors shall be not less than that given in Tables 7-2 to 7-13, inclusive. In these tables, the highest rated circuit voltage at each step represents the maximum operating votage recommended for that thickness of insulation. The minimum thickness shall be not less than 90 percent of the specified average thickness.

The average thickness of the insulation on the control and ground check conductors shall not be less than 0.030 inch for 10 AWG conductors and not less than 0.45 inch for conductors larger than 10 AWG for insulations specified in Table 3-2. The minimum thickness shall not be less than 90 percent of the specified average thickness.

## 7.9 TAPES AND BRAIDS

**7.9.1** Tapes or braids shall be permitted to be used over the insulation. In lieu of a colored tape or braid (when specified), a plain (uncolored) tape or braid may be used if circuit identification is provided by other means, for example a narrow colored tape or colored paint stripe under the plain tape or braid (see 3.17).

## 7.10 CONDUCTOR IDENTIFICATION

See 3.18.

## 7.11 SHIELDING

See 3.19.

## 7.12 ASSEMBLY OF ROUND CABLES

See 3.20.

## 7.13 JACKETS

### 7.13.1 Requirements. See 3.21.2

### 7.13.2 Thickness of Jacket

**7.13.2.1** The average thickness shall not be less than specified in Tables 7-2, 7-3, 7-5, 7-6a and b, 7-7, 7-8, 7-9 and 7-13. The minimum thickness shall not be less than 80 percent of the specified average thickness.

When a thickness of jacket for conductor sizes covered by these tables is not specified, then the thickness shall be such as to obtain the specified overall cable diameters.

**7.13.2.2** Thickness of jacket for constructions covered by Tables 7-4, 7-10, 7-11, and 7-12 shall be such as to obtain the specified overall cable diameters.

**7.13.2.3** For types and constructions of portable cables not covered by these tables, the average thickness shall not be less than specified in Table 3-23. The minimum thickness shall not be less than 80 percent of the specified average value.

Copyright National Electrical Manufacturers Association
Provided by IHS under license with NEMA
No reproduction or networking permitted without license from IHS

Not for Resale

### 7.13.3 Repairs

The jacket may be repaired in accordance with good commercial practice. Cables with repaired jackets must be capable of meeting all applicable requirements of this standard.

## 7.14 OUTSIDE DIAMETERS

Nominal outside diameters of the completed cables shall be in accordance with Tables 7-2 to 7-13, inclusive.

### 7.14.1 Diameter Tolerances

The tolerance for ouside diameters shall be plus 8 percent and minus 5 percent, except for 600 volt cables. For 600 volt flat twin cables, the tolerance shall be ±0.04 inch for the major and ±0.03 inch for the minor diameter. For 600 volt flat three conductor ac cables, the tolerance shall be ±0.08 inch for the major and ±0.05 inch for the monor diameter. For all other 600 volt cables, the tolerances shall be as follows:

| Size, AWG or kcmil | Outside Diameter Tolerance Plus and Minus, Inches |
|---|---|
| 8 - 1 | 0.03 |
| 1/0 - 2/0 | 0.04 |
| 3/0 - 4/0 | 0.05 |
| 250 -1000 | 0.06 |

## 7.15 MARKING

The cable shall be identified throughout its length to indicate the manufacturer.

## 7.16 COMPLETED CABLE TESTS

The cable shall be tested in accordance with Section 6 and shall meet the requirements specified in Section 7.

**7.16.1** Completed nonshielded cable shall withstand, after 6 hours immersion in water, either the alternating current test voltage or the direct current test voltage specified in Tables 7-2 through 7-7, as applicable, for 5 minutes.

**7.16.2** Completed shielded cable rated 5kV or less shall withstand, without immersion in water, the alternating current test voltage or the direct current test voltage specified in Table 7-8 for 7-9 for 5 minutes.

Completed shielded cable rated above 5 kV shall withstand, without immersion in water, the alternating current test voltage specified in Table 7-8 or 7-9 for 5 minutes and shall withstand the direct current test voltage specified in Table 7-8 or 7-9 for 15 minutes.

**7.16.3** The power conductors in a completed cable shall comply with the requirements for insulation resistance after the high voltage ac test and before any dc voltage test.

**7.16.4** The insulated ground check or control conductor shall be tested in accordance with 3.22.4.5.

Copyright National Electrical Manufacturers Association
Provided by IHS under license with NEMA
No reproduction or networking permitted without license from IHS

Not for Resale

## Table 7-1
## RUBBER INSULATION REQUIREMENTS

| Properties | Synthetic Rubber | Synthetic Rubber | Natural Rubber | Synthetic Rubber | Ozone Resisting Natural or Synthetic Rubber | Ozone Resisting Butyl Rubber | Synthetic Rubber |
|---|---|---|---|---|---|---|---|
| Temperature Rating | | | | | | | |
| Dry, °C | 75 | 75 | 75 | 75 | 70/75[1] | 80/85[2] | 90 |
| wet, °C | — | 60 | — | 75 | 70/75[1] | 80/85[2] | — |
| Voltage Rating | | | | | | | |
| Maximum, kV | | | | | | | |
| 133% Insulation Level | 2 | 2 | 2 | 2 | 15 | 15 | 2 |
| 100% Insulation Level | 2 | 2 | 2 | 2 | 28 | 28 | 2 |
| Physical Properties | | | | | | | |
| Tensile Strength, minimum, psi | 700/600[3] | 700/6003 | 1500/12003 | 700 | 450 | 600 | 700 |
| Elongation, minimum, percent | 300/250[3] | 300/250[3] | 400/300[3] | 300 | 250 | 350 | 300 |
| Stress 0 200% elongation minimum, psi | — | — | 400/300[3] | — | — | — | — |
| Set, maximum, percent | — | — | 20 | 25 | 25 | 25 | 25 |
| Ozone Resistance | | | | | | | |
| Exposure for 3 hours, percent ozone, by volume | — | — | — | — | 0.01–0.015 | 0.025–0.03 | — |
| Air Oven Aging | | | | | | | |
| Minimum percent retention of | | | | | | | |
| original value | — | — | — | — | 400[4] | 60 | 60 |
| Tensile strength | — | — | — | — | 200[5] | 60 | 60 |
| Elongation, | | | | | | | |
| After aging for hours | — | — | — | — | 168 | 168 | 168 |
| @ °C ± 1 °C | — | — | — | — | 70 | 100 | 121 |
| Air Pressure Heat | | | | | | | |
| Minimum percent retention of original value | | | | | | | |
| Tensile strength | 50 | 50 | 50 | 50 | — | 50 | 50 |
| Elongation, | 50 | 50 | 5 0 | 5 0 | — | 50 | 50 |
| After aging for hours | 20 | 20 | 20 | 20 | — | 40 | 42 |
| @ °C ± 1 °C | 127 | 127 | 127 | 127 | — | 127 | 127 |
| Oxygen Pressure | | | | | | | |
| Minimum percent retention of | | | | | | | |
| original value | 50 | 50 | 75/65[3] | 50 | 400[4] | — | — |
| Tensile strength | 50 | 50 | 75/65[3] | 50 | 200[5] | — | — |
| Elongation, | | | | | | | |
| | 168 | 168 | 168 | 168 | 48 | — | — |
| After aging for hours | 80 | 80 | 80 | 80 | 70 | — | — |
| @ °C ± 1 °C | | | | | | | |

Copyright National Electrical Manufacturers Association
Provided by IHS under license with NEMA
No reproduction or networking permitted without license from IHS

Not for Resale

**Table 7-1 (Continued)**
**RUBBER INSULATION REQUIREMENTS**

| Properties | Synthetic Rubber | Synthetic Rubber | Natural Rubber | Synthetic Rubber | Ozone Resisting Natural or Synthetic Rubber | Ozone Resisting Butyl Rubber | Synthetic Rubber |
|---|---|---|---|---|---|---|---|
| Electrical Properties | | | | | | | |
| After Immersion in water @ °C ± 1 °C | — | 50 | — | 75 | 50 | 75 | — |
| After 24 hours | | | | | | | |
| Pemittivity (SIC), maximum | — | — | — | 6.0 | 5.0[6,7] | 4.5[7] | — |
| Power factor, percent, maximum | — | — | — | — | 5.0[6,7] | 3.5[7] | — |
| Increase in capacitance | | | | | | | |
| maximum, percent | — | 10.0 | — | 10.0 | 10.0 | 5.0 | — |
| 1–14 days | — | 3.0 | — | 4.0 | 3.0 | 3.0 | — |
| 7–14 days | | | | | | | |
| Stability factor, after 14 days, maximum | — | 1.0 | — | 1.0 | 1.0 | 1.0 | — |
| Alternate stability factor, difference 1-14 days, max | — | 0.5 | — | 0.5 | 0.5 | .05 | — |
| Insulation Resistance | | | | | | | |
| IRK @ 15.6°C, minimum megohms - 1000 feet | 2000[8] | 2000[8] | 10560[8] | 4000[8] | 2000[8] | 20000[8] | 4000[8] |
| Short-time Dielectric Strength Test | — | — | — | — | Pass | — | — |
| Cold-bending and long-time Dielectric Strength Test | — | — | — | — | Pass | — | — |

Notes:

1) 75°C rating limited to voltages 8 kV or less.
2) 85°C rating limited to voltages 8 kV or less.
3) The lower value applies to test specimens taken from finished cables having rubber or other crosslinked jackets.
4) Absolute value in psi.
5) Absolute value in percent.
6) Water temperature for SIC and pf shall be a room temperature (23°C ± 5° C).
7) Above 5 kV only.
8) When a nonconducting separator is applied between the conductor and insulation or where an insulated conductor is covered with a nonmetallic jacket, the insulation resistance shall be not less than 60 percent of the specified value.
9) The overall jacket shall be extra-heavy-duty

Copyright National Electrical Manufacturers Association
Provided by IHS under license with NEMA
No reproduction or networking permitted without license from IHS

Not for Resale

## Table 7-2
## SINGLE-CONDUCTOR PORTABLE POWER CABLES, NONSHIELDED

| Conductor Size* AWG or kcmil | Insulation Thickness inches | Jacket Thickness inches | Outside Diameter inches | Test Voltage, kV: Cables with Other than Ozone-resisting Insulation a-c | Cables with Other than Ozone-resisting Insulation d-c | Cables with Ozone-resisting Insulation a-c | Cables with Ozone-resisting Insulation d-c |
|---|---|---|---|---|---|---|---|
| | | | 600 VOLTS OR LESS | | | | |
| 8 | .060 | ... | 0.44 | 3.5 | 10.5 | 6 | 18 |
| 6 | .060 | ... | 0.51 | 3.5 | 10.5 | 6 | 18 |
| 4 | .060 | ... | 0.57 | 3.5 | 10.5 | 6 | 18 |
| 3 | .060 | ... | 0.63 | 3.5 | 10.5 | 6 | 18 |
| 2 | .060 | ... | 0.66 | 3.5 | 10.5 | 6 | 18 |
| 1 | .080 | ... | 0.74 | 4 | 12 | 7.5 | 22.5 |
| 1/0 | .080 | ... | 0.77 | 4 | 12 | 7.5 | 22.5 |
| 2/0 | .080 | ... | 0.82 | 4 | 12 | 7.5 | 22.5 |
| 3/0 | .080 | ... | 0.87 | 4 | 12 | 7.5 | 22.5 |
| 4/0 | .080 | ... | 0.93 | 4 | 12 | 7.5 | 22.5 |
| 250 | .095 | .095 | 1.03 | 5 | 15 | 8.5 | 25.5 |
| 300 | .095 | .095 | 1.09 | 5 | 15 | 8.5 | 25.5 |
| 350 | .095 | .095 | 1.15 | 5 | 15 | 8.5 | 25.5 |
| 400 | .095 | .095 | 1.20 | 5 | 15 | 8.5 | 25.5 |
| 450 | .095 | .095 | 1.26 | 5 | 15 | 8.5 | 25.5 |
| 500 | .095 | .095 | 1.31 | 5 | 15 | 8.5 | 25.5 |
| 550 | .110 | .110 | 1.42 | 6 | 18 | 10 | 30 |
| 600 | .110 | .110 | 1.46 | 6 | 18 | 10 | 30 |
| 650 | .110 | .110 | 1.50 | 6 | 18 | 10 | 30 |
| 700 | .110 | .110 | 1.54 | 6 | 18 | 10 | 30 |
| 750 | .110 | .110 | 1.58 | 6 | 18 | 10 | 30 |
| 800 | .110 | .110 | 1.62 | 6 | 18 | 10 | 30 |
| 900 | .110 | .110 | 1.69 | 6 | 18 | 10 | 30 |
| 1000 | .110 | .110 | 1.76 | 6 | 18 | 10 | 30 |
| | | | 601 TO 1000 VOLTS | | | | |
| 8 | .060 | .060 | 0.44 | 5 | 15 | 6 | 18 |
| 6 | .080 | .095 | 0.56 | 6 | 18 | 7.5 | 22.5 |
| 4 | .080 | .095 | 0.61 | 6 | 18 | 7.5 | 22.5 |
| 3 | .080 | .095 | 0.65 | 6 | 18 | 7.5 | 22.5 |
| 2 | .080 | .095 | 0.68 | 6 | 18 | 7.5 | 22.5 |
| 1 | .095 | .110 | 0.79 | 7.5 | 22.5 | 8.5 | 22.5 |
| 1/0 | .095 | .110 | 0.83 | 7.5 | 22.5 | 8.5 | 25.5 |
| 2/0 | .095 | .110 | 0.88 | 7.5 | 22.5 | 8.5 | 25.5 |
| 3/0 | .095 | .110 | 0.95 | 7.5 | 22.5 | 8.5 | 25.5 |
| 4/0 | .095 | .110 | 1.02 | 7.5 | 22.5 | 8.5 | 25.5 |
| 260 | .110 | .110 | 1.09 | 9 | 27 | 10 | 30 |
| 300 | .110 | .110 | 1.15 | 9 | 27 | 10 | 30 |
| 350 | .110 | .110 | 1.21 | 9 | 27 | 10 | 30 |
| 400 | .110 | .110 | 1.26 | 9 | 27 | 10 | 30 |
| 450 | .110 | .110 | 1.31 | 9 | 27 | 10 | 30 |
| 500 | .110 | .110 | 1.36 | 9 | 27 | 10 | 30 |
| 550 | .125 | .125 | 1.48 | 10 | 30 | 11.5 | 34.5 |
| 600 | .125 | .125 | 1.52 | 10 | 30 | 11.5 | 34.5 |
| 650 | .125 | .125 | 1.56 | 10 | 30 | 11.5 | 34.5 |
| 700 | .125 | .125 | 1.61 | 10 | 30 | 11.5 | 34.5 |
| 750 | .125 | .125 | 1.65 | 10 | 30 | 11.5 | 34.5 |
| 800 | .125 | .125 | 1.68 | 10 | 30 | 11.5 | 34.5 |
| 900 | .125 | .125 | 1.75 | 10 | 30 | 11.5 | 34.5 |
| 1000 | .125 | .125 | 1.82 | 10 | 30 | 11.5 | 34.5 |

*When greater tensile strength is required, steel wires not exceeding 15 percent of the cross-sectional area of the conductor may be substituted for copper without changing the total cross-sectional area of the conductor.

†See Table 3-24.

Copyright National Electrical Manufacturers Association
Provided by IHS under license with NEMA
No reproduction or networking permitted without license from IHS

Not for Resale

## Table 7-3
## TWO-CONDUCTOR FLAT TWIN PORTABLE POWER CABLES, TYPES W AND G

| Conductor Size, AWG** | Insulation Thickness inches | Nominal Outside Diameter | | Test Voltage, kV | | | |
|---|---|---|---|---|---|---|---|
| | | Minor inches | Major inches | Cables with Other than Ozone-resisting Insulation | | Cables with Ozone-resisting Insulation | |
| | | | | a-c | d-c | a-c | d-c |
| 600 VOLTS OR LESS WITHOUT GROUNDING CONDUCTOR, TYPE W | | | | | | | |
| 8 | .060 | 0.51 | 0.84 | 3.5 | 10.5 | 6 | 18 |
| 6 | .060 | 0.56 | 0.93 | 3.5 | 10.5 | 6 | 18 |
| 4 | .060 | 0.61 | 1.05 | 3.5 | 10.5 | 6 | 18 |
| 3 | .060 | 0.68 | 1.14 | 3.5 | 10.5 | 6 | 18 |
| 2 | .060 | 0.73 | 1.24 | 3.5 | 10.5 | 6 | 18 |
| 1 | .080 | 0.81 | 1.40 | 4 | 12 | 7.5 | 22.5 |
| 1/0 | .080 | 0.93 | 1.51 | 4 | 12 | 7.5 | 22.5 |
| 2/0 | .080 | 0.99 | 1.63 | 4 | 12 | 7.5 | 22.5 |
| 3/0 | .080 | 1.03 | 1.77 | 4 | 12 | 7.5 | 22.5 |
| 4/0 | .080 | 1.10 | 1.89 | 4 | 12 | 7.5 | 22.5 |
| 600 VOLTS OR LESS WITH GROUNDING CONDUCTOR, TYPE G | | | | | | | |
| 6 | 0.60 | 0.56 | 1.02 | 3.5 | 10.5 | 6 | 18 |
| 4 | 0.60 | 0.61 | 1.15 | 3.5 | 10.5 | 6 | 18 |
| 3 | 0.60 | 0.68 | 1.26 | 3.5 | 10.5 | 6 | 18 |
| 2 | 0.60 | 0.73 | 1.35 | 3.5 | 10.5 | 6 | 18 |
| 1 | 0.80 | 0.81 | 1.55 | 4 | 12 | 7.5 | 22.5 |
| 1/0 | 0.80 | 0.93 | 1.67 | 4 | 12 | 7.5 | 22.5 |
| 2/0 | 0.80 | 0.99 | 1.85 | 4 | 12 | 7.5 | 22.5 |
| 3/0 | 0.80 | 1.03 | 2.00 | 4 | 12 | 7.5 | 22.5 |
| 4/0 | 0.80 | 1.10 | 2.10* | 4 | 12 | 7.5 | 22.5 |

601 TO 1000 VOLTS, WITHOUT GROUNDING CONDUCTOR, TYPE W

| Conductor Size, AWG** | Insulation Thickness, inches | Jacket Thickness inches | Nominal Outside Diameter | | Test Voltage, kV | | | |
|---|---|---|---|---|---|---|---|---|
| | | | Minor inches | Major inches | Cables with Other than Ozone-resisting Insulation | | Cables with Ozone-resisting Insulation | |
| | | | | | a-c | d-c | a-c | d-c |
| 8 | .060 | .125 | 0.60 | 0.92 | 5 | 15 | 6 | 18 |
| 6 | .080 | .125 | 0.68 | 1.08 | 6 | 18 | 7.5 | 22.5 |
| 4 | .080 | .140 | 0.77 | 1.22 | 6 | 18 | 7.5 | 22.5 |
| 3 | .080 | .140 | 0.80 | 1.29 | 6 | 18 | 7.5 | 22.5 |
| 2 | .080 | .140 | 0.84 | 1.36 | 6 | 18 | 7.5 | 22.5 |
| 1 | .095 | .155 | 0.94 | 1.54 | 7.5 | 22.5 | 8.5 | 25.5 |
| 1/0 | .095 | .155 | 0.99 | 1.64 | 7.5 | 22.5 | 8.5 | 25.5 |
| 2/0 | .095 | .155 | 1.05 | 1.75 | 7.5 | 22.5 | 8.5 | 25.5 |
| 3/0 | .095 | .170 | 1.14 | 1.91 | 7.5 | 22.5 | 8.5 | 25.5 |
| 4/0 | .095 | .170 | 1.21 | 2.04* | 7.5 | 22.5 | 8.5 | 25.5 |

*These diameters apply to cables with extra-heavy-duty jackets only (see 7.1).
** See Table 3-24.

Copyright National Electrical Manufacturers Association
Provided by IHS under license with NEMA
No reproduction or networking permitted without license from IHS
Not for Resale

## Table 7-4
## TWO-CONDUCTOR ROUND PORTABLE POWER CABLES, TYPES W AND G**
## WITHOUT GROUNDING CONDUCTORS, TYPE W, AND WITH GROUNDING CONDUCTORS, TYPE G

| Conductor Size | Insulation Thickness | Jacket Thickness, Cables with Other than Ozone-resisting Insulation | Outside Diameter, | Test Voltage, kV: Cables with Other than Ozone-Resisting Insulation | | Test Voltage, kV: Cables with Ozone-resisting Insulation | |
|---|---|---|---|---|---|---|---|
| AWG or kcmil* | inches | inches | inches | ac | dc | ac | dc |
| | | | 600 VOLTS OR LESS | | | | |
| 8 | 0.060 | ... | 0.81 | 3.5 | 10.5 | 6 | 18 |
| 6 | 0.060 | ... | 0.93 | 3.5 | 10.5 | 6 | 18 |
| 4 | 0.060 | ... | 1.08 | 3.5 | 10.5 | 6 | 18 |
| 3 | 0.060 | ... | 1.17 | 3.5 | 10.5 | 6 | 18 |
| 2 | 0.060 | ... | 1.27 | 3.5 | 10.5 | 6 | 18 |
| 1 | 0.080 | ... | 1.44 | 4 | 12 | 7.5 | 22.5 |
| 1/0 | 0.080 | ... | 1.52 | 4 | 12 | 7.5 | 22.5 |
| 2/0 | 0.080 | ... | 1.65 | 4 | 12 | 7.5 | 22.5 |
| 3/0 | 0.080 | ... | 1.77 | 4 | 12 | 7.5 | 22.5 |
| 4/0 | 0.080 | ... | 1.92 | 4 | 12 | 7.5 | 22.5 |
| 250 | 0.095 | .205 | 2.16* | 5 | 15 | 8.5 | 25.5 |
| 300 | 0.095 | .220 | 2.32* | 5 | 15 | 8.5 | 25.5 |
| 350 | 0.095 | .220 | 2.43 | 5 | 15 | 8.5 | 25.5 |
| 400 | 0.095 | .235 | 2.57 | 5 | 15 | 8.5 | 25.5 |
| 450 | 0.095 | .235 | 2.67 | 5 | 15 | 8.5 | 25.5 |
| 500 | 0.095 | .235 | 2.76* | 5 | 15 | 8.5 | 25.5 |
| | | | 601 TO 1000 VOLTS | | | | |
| 8 | 0.060 | .140 | 0.92 | 5 | 15 | 6 | 18 |
| 6 | 0.080 | .140 | 1.08 | 6 | 18 | 7.5 | 22.5 |
| 4 | 0.080 | .155 | 1.23 | 6 | 18 | 7.5 | 22.5 |
| 3 | 0.080 | .155 | 1.30 | 6 | 18 | 7.5 | 22.5 |
| 2 | 0.080 | .155 | 1.37 | 6 | 18 | 7.5 | 22.5 |
| 1 | 0.095 | .170 | 1.55 | 7.5 | 22.5 | 8.5 | 25.5 |
| 1/0 | 0.095 | .170 | 1.64 | 7.5 | 22.5 | 8.5 | 25.5 |
| 2/0 | 0.095 | .190 | 1.78 | 7.5 | 22.5 | 8.5 | 25.5 |
| 3/0 | 0.095 | .190 | 1.91 | 7.5 | 22.5 | 8.5 | 25.5 |
| 4/0 | 0.095 | .205 | 2.07* | 7.5 | 22.5 | 8.5 | 25.5 |
| 250 | 0.110 | .205 | 2.22* | 9 | 27 | 10 | 30 |
| 300 | 0.110 | .220 | 2.38* | 9 | 27 | 10 | 30 |
| 350 | 0.110 | .220 | 2.49* | 9 | 27 | 10 | 30 |
| 400 | 0.110 | .235 | 2.63* | 9 | 27 | 10 | 30 |
| 450 | 0.110 | .235 | 2.73* | 9 | 27 | 10 | 30 |
| 500 | 0.110 | .250 | 2.85* | 9 | 27 | 10 | 30 |

*These diameters apply to cables with extra-heavy-duty jackets only(see 7.1).
** See Table 3-24.

Copyright National Electrical Manufacturers Association
Provided by IHS under license with NEMA
No reproduction or networking permitted without license from IHS
Not for Resale

## Table 7-5
## THREE-CONDUCTOR PORTABLE POWER CABLES, TYPES W AND G**
## WITHOUT GROUNDING CONDUCTORS, TYPE W, AND WITH GROUNDING CONDUCTORS, TYPE G

| Conductor Size AWG or kcmil*** | Insulation Thickness, inches | Jacket Thickness, inches | Outside Diameter, inches | Test Voltage, kV: Cables with Other than Ozone-resisting Insulation a-c | Cables with Other than Ozone-resisting Insulation d-c | Cables with Ozone-resisting Insulation a-c | Cables with Ozone-resisting Insulation d-c |
|---|---|---|---|---|---|---|---|
| | | | 600 VOLTS OR LESS | | | | |
| 8 | .060 | ... | 0.91 | 3.5 | 10.5 | 6 | 18 |
| 6 | .060 | ... | 1.01 | 3.5 | 10.5 | 6 | 18 |
| 4 | .060 | ... | 1.17 | 3.5 | 10.5 | 6 | 18 |
| 3 | .060 | ... | 1.24 | 3.5 | 10.5 | 6 | 18 |
| 2 | .060 | ... | 1.34 | 3.5 | 10.5 | 6 | 18 |
| 1 | .080 | ... | 1.51 | 4 | 12 | 7.5 | 22.5 |
| 1/0 | .080 | ... | 1.65 | 4 | 12 | 7.5 | 22.5 |
| 2/0 | .080 | ... | 1.75 | 4 | 12 | 7.5 | 22.5 |
| 3/0 | .080 | ... | 1.89 | 4 | 12 | 7.5 | 22.5 |
| 4/0 | .080 | ... | 2.04* | 4 | 12 | 7.5 | 22.5 |
| 250 | .095 | ... | 2.39* | 5 | 15 | 8.5 | 25.5 |
| 300 | .095 | ... | 2.56* | 5 | 15 | 8.5 | 25.5 |
| 350 | .095 | ... | 2.68* | 5 | 15 | 8.5 | 25.5 |
| 400 | .095 | ... | 2.82* | 5 | 15 | 8.5 | 25.5 |
| 450 | .095 | ... | 2.94* | 5 | 15 | 8.5 | 25.5 |
| 500 | .095 | ... | 3.03* | 5 | 15 | 8.5 | 25.5 |
| | | | 601 TO 1000 VOLTS | | | | |
| 8 | .060 | .140 | 0.97 | 5 | 15 | 6 | 18 |
| 6 | .080 | .140 | 1.15 | 6 | 18 | 7.5 | 22.5 |
| 4 | .080 | .155 | 1.32 | 6 | 18 | 7.5 | 22.5 |
| 3 | .080 | .155 | 1.38 | 6 | 18 | 7.5 | 22.5 |
| 2 | .080 | .170 | 1.49 | 6 | 18 | 7.5 | 22.5 |
| 1 | .095 | .170 | 1.64 | 7.5 | 22.5 | 8.5 | 25.5 |
| 1/0 | .095 | .190 | 1.78 | 7.5 | 22.5 | 8.5 | 25.5 |
| 2/0 | .095 | .190 | 1.89 | 7.5 | 22.5 | 8.5 | 25.5 |
| 3/0 | .095 | .205 | 2.06* | 7.5 | 22.5 | 8.5 | 25.5 |
| 4/0 | .095 | .205 | 2.20* | 7.5 | 22.5 | 8.5 | 25.5 |
| 250 | .110 | .220 | 2.39* | 9 | 27 | 10 | 30 |
| 300 | .110 | .235 | 2.56* | 9 | 27 | 10 | 30 |
| 350 | .110 | .235 | 2.68* | 9 | 27 | 10 | 30 |
| 400 | .110 | .250 | 2.82* | 9 | 27 | 10 | 30 |
| 450 | .110 | .250 | 2.94* | 9 | 27 | 10 | 30 |
| 500 | .110 | .250 | 3.03* | 9 | 27 | 10 | 30 |
| | | | 1001 TO 2000 VOLTS | | | | |
| 8 | .080 | .140 | 1.04 | 6 | 18 | 7.5 | 22.5 |
| 6 | .095 | .155 | 1.25 | 7.5 | 22.5 | 8.5 | 25.5 |
| 4 | .095 | .170 | 1.40 | 7.5 | 22.5 | 8.5 | 25.5 |
| 3 | .095 | .170 | 1.48 | 7.5 | 22.5 | 8.5 | 25.5 |
| 2 | .095 | .170 | 1.55 | 7.5 | 22.5 | 8.5 | 25.5 |
| 1 | .110 | .190 | 1.74 | 9 | 27 | 10 | 30 |
| 1/0 | .110 | .190 | 1.84 | 9 | 27 | 10 | 30 |
| 2/0 | .110 | .205 | 1.99 | 9 | 27 | 10 | 30 |
| 3/0 | .110 | .205 | 2.12* | 9 | 27 | 10 | 30 |
| 4/0 | .110 | .220 | 2.30* | 9 | 27 | 10 | 30 |
| 250 | .125 | .225 | 2.46* | 10 | 30 | 11.5 | 34.5 |
| 300 | .125 | .235 | 2.63* | 10 | 30 | 11.5 | 34.5 |
| 350 | .125 | .235 | 2.75* | 10 | 30 | 11.5 | 34.5 |
| 400 | .125 | .250 | 2.89* | 10 | 30 | 11.5 | 34.5 |
| 450 | .125 | .250 | 3.01* | 10 | 30 | 11.5 | 34.5 |
| 500 | .125 | .265 | 3.13* | 10 | 30 | 11.5 | 34.5 |

*These diameters apply to cables with extra-heavy-duty jackets only (see 7.1).
**See Appendix H.
***See Table 3-24.

Copyright National Electrical Manufacturers Association
Provided by IHS under license with NEMA
No reproduction or networking permitted without license from IHS
Not for Resale

**Table 7-5 (Continued)**
**THREE-CONDUCTOR PORTABLE POWER CABLES, TYPES W AND G****
**WITHOUT GROUNDING CONDUCTORS, TYPE W, AND WITH GROUNDING CONDUCTORS, TYPE G**

| Conductor Size AWG or kcmil*** | Insulation Thickness, inches | Jacket Thickness, inches | Outside Diameter, inches | Test Voltage, kV: Cables with Other than Ozone-resisting Insulation a-c | Cables with Other than Ozone-resisting Insulation d-c | Cables with Ozone-resisting Insulation a-c | Cables with Ozone-resisting Insulation d-c |
|---|---|---|---|---|---|---|---|
| | | | 2001 TO 3000 VOLTS | | | | |
| 8 | .110 | .155 | 1.21 | — | — | 10 | 30 |
| 6 | .125 | .155 | 1.39 | — | — | 11.5 | 34.5 |
| 4 | .125 | .170 | 1.54 | — | — | 11.5 | 34.5 |
| 3 | .125 | .170 | 1.61 | — | — | 11.5 | 34.5 |
| 2 | .125 | .190 | 1.72 | — | — | 11.5 | 34.5 |
| 1 | .125 | .190 | 1.81 | — | — | 11.5 | 34.5 |
| 1/0 | .125 | .190 | 1.91 | — | — | 11.5 | 34.5 |
| 2/0 | .125 | .205 | 2.05* | — | — | 11.5 | 34.5 |
| 3/0 | .125 | .205 | 2.18* | — | — | 11.5 | 34.5 |
| 4/0 | .125 | .220 | 2.37* | — | — | 11.5 | 34.5 |
| 250 | ..140 | .235 | 2.56* | — | — | 13 | 35 |
| 300 | .140 | .235 | 2.69* | — | — | 13 | 35 |
| 350 | .140 | .250 | 2.85* | — | — | 13 | 35 |
| 400 | .140 | .250 | 2.96* | — | — | 13 | 35 |
| 450 | .140 | .265 | 3.10* | — | — | 13 | 35 |
| 500 | .140 | .265 | 3.20* | — | — | 13 | 35 |
| | | | 3001 TO 5000 VOLTS | | | | |
| 8 | ... | ... | ... | — | — | ... | ... |
| 6 | .155 | .170 | 1.55 | — | — | 13 | 35 |
| 4 | .155 | .170 | 1.67 | — | — | 13 | 35 |
| 3 | .155 | .190 | 1.78 | — | — | 13 | 35 |
| 2 | .155 | .190 | 1.86 | — | — | 13 | 35 |
| 1 | .155 | .205 | 1.97 | — | — | 13 | 35 |
| 1/0 | .155 | .205 | 2.08* | — | — | 13 | 35 |
| 2/0 | .155 | .205 | 2.19* | — | — | 13 | 35 |
| 3/0 | .155 | .220 | 2.36* | — | — | 13 | 35 |
| 4/0 | .155 | .220 | 2.50* | — | — | 13 | 35 |
| 250 | .170 | .235 | 2.69* | — | — | 13 | 35 |
| 300 | .170 | .250 | 2.86* | — | — | 13 | 35 |
| 350 | .170 | .250 | 2.98* | — | — | 13 | 35 |
| 400 | .170 | .265 | 3.13* | — | — | 13 | 35 |
| 450 | .170 | .265 | 3.24* | — | — | 13 | 35 |
| 500 | .170 | .280 | 3.37* | — | — | 13 | 35 |

*These diameters apply to cables with extra-heavy-duty jackets only (see 7.1).
**See Appendix H.
***See Table 3-24.

Copyright National Electrical Manufacturers Association
Provided by IHS under license with NEMA
No reproduction or networking permitted without license from IHS
Not for Resale

## Table 7-6a
## 600 VOLTS OR LESS
## TYPE G THREE-CONDUCTOR FLAT PORTABLE POWER CABLES WITH TWO GROUNDING CONDUCTORS

| Power Conductor Size, AWG† | Power Conductor Thickness, inches | Grounding Conductor Size, AWG (each) | Nominal Outside Diameter Minor, inches | Nominal Outside Diameter Major, inches | Test Voltage, kV: Cables with Other than Ozone-resisting Insulation a-c | Test Voltage, kV: Cables with Other than Ozone-resisting Insulation d-c | Test Voltage, kV: Cables with Ozone-resisting Insulation a-c | Test Voltage, kV: Cables with Ozone-resisting Insulation d-c |
|---|---|---|---|---|---|---|---|---|
| 6 | .060 | 8 | 0.67 | 1.69 | 3.5 | 10.5 | 6 | 18 |
| 4 | .060 | 8 | 0.75 | 1.89 | 3.5 | 10.5 | 6 | 18 |
| 3 | .060 | 7 | 0.77 | 2.08* | 3.5 | 10.5 | 6 | 18 |
| 2 | .060 | 6 | 0.81 | 2.23* | 3.5 | 10.5 | 6 | 18 |
| 1 | .080 | 5 | 0.97 | 2.48* | 4 | 12 | 7 | 21 |
| 1/0 | .080 | 4 | 1.01 | 2.67* | 4 | 12 | 7 | 21 |
| 2/0 | .080 | 3 | 1.10 | 2.86* | 4 | 12 | 7 | 21 |
| 3/0 | .080 | 2 | 1.18 | 3.12* | 4 | 12 | 7 | 21 |
| 4/0 | .080 | 1 | 1.24 | 3.30* | 4 | 12 | 7 | 21 |

*These cables require extra-heavy-duty jackets (see 7.1).

## Table 7-6b
## 600 VOLTS OR LESS
## TYPE G-GC THREE-CONDUCTOR FLAT PORTABLE POWER CABLES WITH ONE GROUNDING CONDUCTOR AND ONE GROUND CHECK CONDUCTOR

| Power Conductor Size, AWG** | Power Conductor Thickness inches | Grounding Conductor Size, AWG | Ground Check Conductor, Minimum Size, AWG* | Nominal Outside Diameter Minor, inches | Nominal Outside Diameter Major, inches | Test Voltage, kV: Cables with Other than Ozone-resisting Insulation a-c | Test Voltage, kV: Cables with Other than Ozone-resisting Insulation d-c | Test Voltage, kV: Cables with Ozone-resisting Insulation a-c | Test Voltage, kV: Cables with Ozone-resisting Insulation d-c |
|---|---|---|---|---|---|---|---|---|---|
| 6 | .060 | 8 | 8 | 0.67 | 1.69 | 3.5 | 10.5 | 6 | 18 |
| 4 | .060 | 7 | 8 | 0.75 | 1.89 | 3.5 | 10.5 | 6 | 18 |
| 3 | .060 | 6 | 8 | 0.77 | 2.08* | 3.5 | 10.5 | 6 | 18 |
| 2 | .060 | 5 | 8 | 0.81 | 2.23* | 3.5 | 10.5 | 6 | 18 |
| 1 | .060 | 4 | 8 | 0.97 | 2.48* | 4 | 12 | 7 | 21 |
| 1/0 | .080 | 3 | 8 | 1.01 | 2.67* | 4 | 12 | 7 | 21 |
| 2/0 | .080 | 2 | 8 | 1.10 | 2.86* | 4 | 12 | 7 | 21 |
| 3/0 | .080 | 1 | 8 | 1.18 | 3.12* | 4 | 12 | 7 | 21 |
| 4/0 | .080 | 1/0 | 8 | 1.24 | 3.30* | 4 | 12 | 7 | 21 |

*These cables require extra-heavy-duty jackets (see 7.1).
** See Table 3-24.

Copyright National Electrical Manufacturers Association
Provided by IHS under license with NEMA
No reproduction or networking permitted without license from IHS
Not for Resale

## Table 7-7
## FOUR-CONDUCTOR PORTABLE POWER CABLES, TYPES W AND G**
## WITHOUT GROUNDING CONDUCTORS, TYPE W, AND WITH GROUNDING CONDUCTORS, TYPE G

| Conductor Size AWG or kcmil*** | Insulation Thickness inches | Jacket Thickness inches | Outside Diameter inches | Test Voltage, kV: Cables with Other than Ozone-resisting Insulation a-c | Cables with Other than Ozone-resisting Insulation d-c | Cables with Ozone-resisting Insulation a-c | Cables with Ozone-resisting Insulation d-c |
|---|---|---|---|---|---|---|---|
| | | | 600 VOLTS OR LESS | | | | |
| 8 | .060 | ... | 0.99 | 3.5 | 10.5 | 6 | 18 |
| 6 | 0.60 | ... | 1.10 | 3.5 | 10.5 | 6 | 18 |
| 4 | .060 | ... | 1.27 | 3.5 | 10.5 | 6 | 18 |
| 3 | .060 | ... | 1.34 | 3.5 | 10.5 | 6 | 18 |
| 2 | .060 | ... | 1.48 | 3.5 | 10.5 | 6 | 18 |
| 1 | .080 | ... | 1.68 | 4 | 12 | 7.5 | 22.5 |
| 1/0 | .080 | ... | 1.79 | 4 | 12 | 7.5 | 22.5 |
| 2/0 | .080 | ... | 1.93 | 4 | 12 | 7.5 | 22.5 |
| 3/0 | .080 | ... | 2.07* | 4 | 12 | 7.5 | 22.5 |
| 4/0 | .080 | ... | 2.26* | 4 | 12 | 7.5 | 22.5 |
| 250 | .095 | ... | 2.66* | 5 | 15 | 8.5 | 25.5 |
| 300 | .095 | ... | 2.84* | 5 | 15 | 8.5 | 25.5 |
| 350 | .095 | ... | 2.98* | 5 | 15 | 8.5 | 25.5 |
| 400 | .095 | ... | 3.14* | 5 | 15 | 8.5 | 25.5 |
| 450 | .095 | ... | 3.26* | 5 | 15 | 8.5 | 25.5 |
| 500 | .095 | ... | 3.40* | 5 | 15 | 8.5 | 25.5 |
| | | | 601 TO 1000 VOLTS | | | | |
| 8 | .060 | .140 | 1.06 | 5 | 15 | 6 | 18 |
| 6 | .080 | .155 | 1.29 | 6 | 18 | 7.5 | 22.5 |
| 4 | .080 | .155 | 1.42 | 6 | 18 | 7.5 | 22.5 |
| 3 | .080 | .170 | 1.53 | 6 | 18 | 7.5 | 22.5 |
| 2 | .080 | .170 | 1.62 | 6 | 18 | 7.5 | 22.5 |
| 1 | .095 | .190 | 1.83 | 7.5 | 22.5 | 8.5 | 25.5 |
| 1/0 | .095 | .205 | 2.01* | 7.5 | 22.5 | 8.5 | 25.5 |
| 2/0 | .095 | .205 | 2.10* | 7.5 | 22.5 | 8.5 | 25.5 |
| 3/0 | .095 | .220 | 2.29* | 7.5 | 22.5 | 8.5 | 25.5 |
| 4/0 | .095 | .220 | 2.45* | 7.5 | 22.5 | 8.5 | 25.5 |
| 250 | .110 | .235 | 2.66* | 9 | 27 | 10 | 30 |
| 300 | .110 | .250 | 2.84* | 9 | 27 | 10 | 30 |
| 350 | .110 | .250 | 2.98* | 9 | 27 | 10 | 30 |
| 400 | .110 | .265 | 3.14* | 9 | 27 | 10 | 30 |
| 450 | .110 | .265 | 3.26* | 9 | 27 | 10 | 30 |
| 500 | .110 | .280 | 3.40* | 9 | 27 | 10 | 30 |
| | | | 1001 TO 2000 VOLTS | | | | |
| 8 | .080 | .140 | 1.13 | 6 | 18 | 7.5 | 22.5 |
| 6 | .095 | .155 | 1.36 | 7.5 | 22.5 | 8.5 | 25.5 |
| 4 | .095 | .170 | 1.53 | 7.5 | 22.5 | 8.5 | 25.5 |
| 3 | .095 | .170 | 1.61 | 7.5 | 22.5 | 8.5 | 25.5 |
| 2 | .095 | .190 | 1.73 | 7.5 | 22.5 | 8.5 | 25.5 |
| 1 | .110 | .190 | 1.90 | 9 | 27 | 10 | 30 |
| 1/0 | .110 | .205 | 2.05* | 9 | 27 | 10 | 30 |
| 2/0 | .110 | .205 | 2.17* | 9 | 27 | 10 | 30 |
| 3/0 | .110 | .220 | 2.36* | 9 | 27 | 10 | 30 |
| 4/0 | .110 | .220 | 2.52* | 9 | 27 | 10 | 30 |
| 250 | .125 | .235 | 2.73* | 10 | 30 | 11.5 | 34.5 |
| 300 | .125 | .250 | 2.92* | 10 | 30 | 11.5 | 34.5 |
| 350 | .125 | .265 | 3.08* | 10 | 30 | 11.5 | 34.5 |
| 400 | .125 | .265 | 3.21* | 10 | 30 | 11.5 | 34.5 |
| 450 | .125 | .280 | 3.37* | 10 | 30 | 11.5 | 34.5 |
| 500 | .125 | .280 | 3.48* | 10 | 30 | 11.5 | 34.5 |

*These diameters apply to cables with extra-heavy-duty jackets only (see 7.1).
**See Appendix H.
***See Table 3-24.

Copyright National Electrical Manufacturers Association
Provided by IHS under license with NEMA
No reproduction or networking permitted without license from IHS
Not for Resale

## Table 7-7 (Continued)
## FOUR-CONDUCTOR PORTABLE POWER CABLES, TYPES W AND G**
## WITHOUT GROUNDING CONDUCTORS, TYPE W, AND WITH GROUNDING CONDUCTORS, TYPE G

| Conductor Size AWG or kcmil*** | Insulation Thickness, inches | Jacket Thickness, inches | Outside Diameter, inches | Test Voltage, kV | | | |
|---|---|---|---|---|---|---|---|
| | | | | Cables with Other than Ozone-resisting Insulation | | Cables with Ozone-resisting Insulation | |
| | | | | a-c | d-c | a-c | d-c |
| | | | 2001 TO 3000 VOLTS | | | | |
| 8 | .110 | .155 | 1.31 | ... | ... | 10 | 30 |
| 6 | .125 | .170 | 1.55 | ... | ... | 11.5 | 34.5 |
| 4 | .125 | .170 | 1.68 | ... | ... | 11.5 | 34.5 |
| 3 | .125 | .190 | 1.79 | ... | ... | 11.5 | 34.5 |
| 2 | .125 | .190 | 1.88 | ... | ... | 11.5 | 34.5 |
| 1 | .125 | .205 | 2.01* | ... | ... | 11.5 | 34.5 |
| 1/0 | .125 | .205 | 2.12* | ... | ... | 11.5 | 34.5 |
| 2/0 | .125 | .220 | 2.28* | ... | ... | 11.5 | 34.5 |
| 3/0 | .125 | .220 | 2.44* | ... | ... | 11.5 | 34.5 |
| 4/0 | .125 | .235 | 2.63* | ... | ... | 11.5 | 34.5 |
| 250 | .140 | .250 | 2.84* | ... | ... | 13 | 35 |
| 300 | .140 | .250 | 2.99* | ... | ... | 13 | 35 |
| 350 | .140 | .265 | 3.16* | ... | ... | 13 | 35 |
| 400 | .140 | .265 | 3.28* | ... | ... | 13 | 35 |
| 450 | .140 | .280 | 3.44* | ... | ... | 13 | 35 |
| 500 | .140 | ... | ... | ... | ... | 13 | 35 |
| | | | 3001 TO 5000 VOLTS | | | | |
| 8 | .155 | ... | ... | ... | ... | ... | ... |
| 6 | .155 | .190 | 1.73 | ... | ... | 13 | 35 |
| 4 | .155 | .190 | 1.86 | ... | ... | 13 | 35 |
| 3 | .155 | .190 | 1.94 | ... | ... | 13 | 35 |
| 2 | .155 | .205 | 2.06* | ... | ... | 13 | 35 |
| 1 | .155 | .205 | 2.16* | ... | ... | 13 | 35 |
| 1/0 | .155 | .220 | 2.31* | ... | ... | 13 | 35 |
| 2/0 | .155 | .220 | 2.43* | ... | ... | 13 | 35 |
| 3/0 | .155 | .235 | 2.62* | ... | ... | 13 | 35 |
| 4/0 | .155 | .235 | 2.78* | ... | ... | 13 | 35 |
| 250 | .170 | .250 | 2.99* | ... | ... | 13 | 35 |
| 300 | .170 | .265 | 3.17* | ... | ... | 13 | 35 |
| 350 | .170 | 2.65 | 3.31* | ... | ... | 13 | 35 |
| 400 | .170 | 2.80 | 3.47* | ... | ... | 13 | 35 |
| 450 | ... | ... | ... | ... | ... | ... | ... |
| 500 | ... | ... | ... | ... | ... | ... | ... |

*These diameters apply to cables with extra-heavy-duty jackets only (see 7.1).
**See Appendix H.
***See Table 3-24.

Copyright National Electrical Manufacturers Association
Provided by IHS under license with NEMA
No reproduction or networking permitted without license from IHS
Not for Resale

## Table 7-8
## THREE-CONDUCTOR TYPES SHD AND SHD-GC PORTABLE POWER CABLES, FOR 100 PERCENT INSULATION LEVEL (GROUNDED NEUTRAL) ONLY

| Conductor Size AWG or kcmil*** | Insulation Thickness, inches | Jacket Thickness, inches | Outside Diameter,* inches | Test Voltage, kV Cables with Ozone-resisting Insulation | |
|---|---|---|---|---|---|
| | | | | a-c | d-c |
| | | 2001 TO 3000 VOLTS | | | |
| 8 | .125 | .155 | 1.42 | 10 | 30 |
| 6 | .140 | .170 | 1.62 | 11.5 | 34.5 |
| 4 | .140 | .190 | 1.77 | 11.5 | 34.5 |
| 3 | .140 | .190 | 1.84 | 11.5 | 34.5 |
| 2 | .140 | .190 | 1.92 | 11.5 | 34.5 |
| 1 | .140 | .205 | 2.04 | 11.5 | 34.5 |
| 1/0 | .140 | .205 | 2.18 | 11.5 | 34.5 |
| 2/0 | .140 | .205 | 2.29 | 11.5 | 34.5 |
| 3/0 | .140 | .220 | 2.45 | 11.5 | 34.5 |
| 4/0 | .140 | .235 | 2.62 | 11.5 | 34.5 |
| | | 3001 TO 5000 VOLTS | | | |
| 8 | ... | ... | ... | ... | ... |
| 6 | .170 | .190 | 1.78 | 13 | 35 |
| 4 | .170 | .190 | 1.90 | 13 | 35 |
| 3 | .170 | .190 | 1.98 | 13 | 35 |
| 2 | .170 | .205 | 2.09 | 13 | 35 |
| 1 | .170 | .205 | 2.18 | 13 | 35 |
| 1/0 | .170 | .220 | 2.34 | 13 | 35 |
| 2/0 | .170 | .220 | 2.46 | 13 | 35 |
| 3/0 | .170 | .235 | 2.62 | 13 | 35 |
| 4/0 | .170 | .235 | 2.76 | 13 | 35 |
| | | 5001 TO 8000 VOLTS | | | |
| 8 | ... | ... | ... | ... | ... |
| 6 | ... | ... | ... | ... | ... |
| 4 | .220 | .205 | 2.14 | 18 | 45 |
| 3 | .220 | .205 | 2.21 | 18 | 45 |
| 2 | .220 | .220 | 2.32 | 18 | 45 |
| 1 | .220 | .220 | 2.41 | 18 | 45 |
| 1/0 | .220 | .220 | 2.55 | 18 | 45 |
| 2/0 | .220 | .235 | 2.69 | 18 | 45 |
| 2/0 | .220 | .235 | 2.82 | 18 | 45 |
| 4/0 | .220 | .250 | 2.99 | 18 | 45 |
| | | 8001 TO 15000 VOLTS | | | |
| 8 | ... | ... | ... | ... | ... |
| 6 | ... | ... | ... | ... | ... |
| 4 | ... | ... | ... | ... | ... |
| 3 | ... | ... | ... | ... | ... |
| 2 | .330 | .250 | 2.85 | 27 | 70 |
| 1 | .330 | .250 | 2.94 | 27 | 70 |
| 1/0 | .330 | .250 | 3.08 | 27 | 70 |
| 2/0 | .330 | .265 | 3.22 | 27 | 70 |
| 3/0 | .330 | .265 | 3.35 | 27 | 70 |
| 4/0 | .330 | .280 | 3.52 | 27 | 70 |

*These diameters apply to cables with extra-heavy-duty jackets only (see 7.1).
** See Table 3-24.
NOTE: See Table 3-24 for grounding conductor size.

Copyright National Electrical Manufacturers Association
Provided by IHS under license with NEMA
No reproduction or networking permitted without license from IHS
Not for Resale

## Table 7-9
## SINGLE-CONDUCTOR TYPE SH PORTABLE POWER CABLES, FOR 100 PERCENT INSULATION LEVEL (GROUNDED NEUTRAL) ONLY

| Conductor Size* AWG or kcmil | Insulation Thickness inches | Jacket Thickness inches | Outside Diameter inches | Test Voltage, kV Cables with Ozone-resisting Insulation | |
|---|---|---|---|---|---|
| | | | | a-c | d-c |
| | | 2001 TO 3000 VOLTS | | | |
| 8 | .125 | .110 | 0.82 | 10 | 30 |
| 6 | .140 | .125 | 0.92 | 11.5 | 34.5 |
| 4 | .140 | .125 | 0.98 | 11.5 | 34.5 |
| 3 | .140 | .140 | 1.04 | 11.5 | 34.5 |
| 2 | .140 | .140 | 1.08 | 11.5 | 34.5 |
| 1 | .140 | .140 | 1.12 | 11.5 | 34.5 |
| 1/0 | .140 | .155 | 1.20 | 11.5 | 34.5 |
| 2/0 | .140 | .155 | 1.25 | 11.5 | 34.5 |
| 3/0 | .140 | .155 | 1.31 | 11.5 | 34.5 |
| 4/0 | .140 | .155 | 1.38 | 11.5 | 34.5 |
| 250 | .155 | .170 | 1.49 | 13 | 35 |
| 300 | .155 | .170 | 1.55 | 13 | 35 |
| 350 | .155 | .170 | 1.61 | 13 | 35 |
| 400 | .155 | .170 | 1.66 | 13 | 35 |
| 450 | .155 | .170 | 1.75 | 13 | 35 |
| 500 | .155 | .170 | 1.79 | 13 | 35 |
| | | 3001 TO 5000 VOLTS | | | |
| 8 | ... | ... | ... | ... | ... |
| 6 | .170 | .125 | 0.98 | 13 | 35 |
| 4 | .170 | .140 | 1.07 | 13 | 35 |
| 3 | .170 | .140 | 1.10 | 13 | 35 |
| 2 | .170 | .140 | 1.14 | 13 | 35 |
| 1 | .170 | .155 | 1.22 | 13 | 35 |
| 1/0 | .170 | .155 | 1.26 | 13 | 35 |
| 2/0 | .170 | .155 | 1.31 | 13 | 35 |
| 3/0 | .170 | .155 | 1.37 | 13 | 35 |
| 4/0 | .170 | .155 | 1.44 | 13 | 35 |
| 250 | .190 | .170 | 1.52 | 13 | 35 |
| 300 | .190 | .170 | 1.62 | 13 | 35 |
| 350 | .190 | .170 | 1.67 | 13 | 35 |
| 400 | .190 | .190 | 1.76 | 13 | 35 |
| 450 | .190 | .190 | 1.81 | 13 | 35 |
| 500 | .190 | .190 | 1.85 | 13 | 35 |
| | | 5001 TO 8000 VOLTS | | | |
| 8 | ... | ... | ... | ... | ... |
| 6 | ... | ... | ... | ... | ... |
| 4 | .220 | .155 | 1.20 | 18 | 45 |
| 3 | .220 | .155 | 1.23 | 18 | 45 |
| 2 | .220 | .155 | 1.27 | 18 | 45 |
| 1 | .220 | .155 | 1.31 | 18 | 45 |
| 1/0 | .220 | .155 | 1.36 | 18 | 45 |
| 2/0 | .220 | .155 | 1.41 | 18 | 45 |
| 3/0 | .220 | .170 | 1.50 | 18 | 45 |
| 4/0 | .220 | .170 | 1.56 | 18 | 45 |
| 250 | .220 | .170 | 1.62 | 18 | 45 |
| 300 | .220 | .190 | 1.71 | 18 | 45 |
| 350 | .220 | .190 | 1.77 | 18 | 45 |
| 400 | .220 | .190 | 1.82 | 18 | 45 |
| 450 | .220 | .190 | 1.87 | 18 | 45 |
| 500 | .220 | .190 | 1.92 | 18 | |

*See Table 3-24.

Copyright National Electrical Manufacturers Association
Provided by IHS under license with NEMA
No reproduction or networking permitted without license from IHS

Not for Resale

**Table 7-9 (Continued)**
**SINGLE-CONDUCTOR TYPE SH PORTABLE POWER CABLES**
**FOR 100 PERCENT INSULATION LEVEL (GROUNDED NEUTRAL) ONLY**

| Conductor Size AWG or kcmil** | Insulation Thickness, inches | Jacket Thickness, inches | Outside Diameter,* inches | Test Voltage, kV Cables with Ozone-resisting Insulation a-c | d-c |
|---|---|---|---|---|---|
| | | 8001 TO 15000 VOLTS | | | |
| 2 | .330 | .170 | 1.52 | 27 | 70 |
| 1 | .330 | .170 | 1.56 | 27 | 70 |
| 1/0 | .330 | .170 | 1.60 | 27 | 70 |
| 2/0 | .330 | .170 | 1.66 | 27 | 70 |
| 3/0 | .330 | .190 | 1.75 | 27 | 70 |
| 4/0 | .330 | .190 | 1.81 | 27 | 70 |
| 250 | .330 | .190 | 1.86 | 27 | 70 |
| 300 | .330 | .190 | 1.93 | 27 | 70 |
| 350 | .330 | .205 | 2.01 | 27 | 70 |
| 400 | .330 | .205 | 2.07 | 27 | 70 |
| 450 | .330 | .205 | 2.12 | 27 | 70 |
| 500 | .330 | .205 | 2.17 | 27 | 70 |
| | | 15001 TO 23000 VOLTS | | | |
| 2 | ... | ... | ... | ... | ... |
| 1 | .455 | .190 | 1.84 | 36 | 95 |
| 1/0 | .455 | .190 | 1.89 | 36 | 95 |
| 2/0 | .455 | .190 | 1.94 | 36 | 95 |
| 3/0 | .455 | .205 | 2.03 | 36 | 95 |
| 4/0 | .455 | .205 | 2.09 | 36 | 95 |
| 250 | .455 | .205 | 2.15 | 36 | 95 |
| 300 | .455 | .205 | 2.21 | 36 | 95 |
| 350 | .455 | .220 | 2.30 | 36 | 95 |
| 400 | .455 | .220 | 2.35 | 36 | 95 |
| 450 | .455 | .220 | 2.40 | 36 | 95 |
| 500 | .455 | .220 | 2.45 | 36 | 95 |
| | | 23001 TO 28000 VOLTS | | | |
| 2 | ... | ... | ... | ... | ... |
| 1 | ... | .205 | 2.03 | 42 | 105 |
| 1/0 | .530 | .205 | 2.07 | 42 | 105 |
| 2/0 | .530 | .205 | 2.13 | 42 | 105 |
| 3/0 | .530 | .205 | 2.19 | 42 | 105 |
| 4/0 | .530 | .205 | 2.25 | 42 | 105 |
| 250 | .530 | .220 | 2.33 | 42 | 105 |
| 300 | .530 | .220 | 2.40 | 42 | 105 |
| 350 | .530 | .220 | 2.45 | 42 | 105 |
| 400 | .530 | .220 | 2.51 | 42 | 105 |
| 450 | .530 | .235 | 2.59 | 42 | 105 |
| 500 | .530 | .235 | 2.64 | 42 | 105 |

*These diameters apply to cables with extra-heavy-duty jackets only (see 7.1).
** See Table 3-24.

Copyright National Electrical Manufacturers Association
Provided by IHS under license with NEMA
No reproduction or networking permitted without license from IHS

Not for Resale

## Table 7-10
## FIVE-CONDUCTOR TYPES W AND G** AND SIX-CONDUCTOR TYPE W PORTABLE POWER CABLES FOR 0 TO 600 VOLTS

| Power Conductor Size, AWG (See Table 3-24) | Grounding Conductor Size, AWG | Grounding Conductor Number of Strands | Insulation Thickness inches | Five-Conductor Cables, inches | Six-Conductor Cables, inches | Test Voltage, kV: Cables with Other than Ozone-resisting Insulation a-c | Test Voltage, kV: Cables with Other than Ozone-resisting Insulation d-c | Test Voltage, kV: Cables with Ozone-resisting Insulation a-c | Test Voltage, kV: Cables with Ozone-resisting Insulation d-c |
|---|---|---|---|---|---|---|---|---|---|
| 8 | 8 | 49 | .060 | 1.07 | 1.18 | 3.5 | 10.5 | 6 | 18 |
| 6 | 7 | 49 | .060 | 1.21 | 1.31 | 3.5 | 10.5 | 6 | 18 |
| 4 | 5 | 133 | .060 | 1.40 | 1.52 | 3.5 | 10.5 | 6 | 18 |
| 3 | 4 | 133 | .060 | 1.48 | 1.61 | 3.5 | 10.5 | 6 | 18 |
| 2 | 3 | 133 | .060 | 1.61 | 1.75 | 3.5 | 10.5 | 6 | 18 |
| 1 | 2 | 133 | .080 | 1.88 | 2.05* | 4 | 12 | 7.5 | 22.5 |
| 1/0 | 1 | 133 | .080 | 1.96 | 2.13* | 4 | 12 | 7.5 | 22.5 |
| 2/0 | 1/0 | 259 | .080 | 2.13* | 2.32* | 4 | 12 | 7.5 | 22.5 |
| 3/0 | 2/0 | 259 | .080 | 2.26* | 2.49* | 4 | 12 | 7.5 | 22.5 |
| 4/0 | 3/0 | 259 | .080 | 2.46* | 2.71* | 4 | 12 | 7.5 | 22.5 |

*These diameters apply to cables with extra-heavy-duty jackets only (see 7.1).
**Type G cables shall be used for the internal wiring of equipment only.

## Table 7-11
## TWO- AND THREE-CONDUCTOR PORTABLE POWER CABLES TYPE PG (POWER GROUNDED) FOR 0 TO 600 VOLTS

| Power Conductor Size, AWG or kcmil (See Table 3-24) | Grounding Conductor Size, AWG | Grounding Conductor Number of Strands | Power Conductor Insulation Thickness inch | Outside Diameters: Five-Conductor Cables, inches | Outside Diameters: Six-Conductor Cables, inches | Test Voltage, kV: Cables with Other than Ozone-resisting Insulation a-c | Test Voltage, kV: Cables with Other than Ozone-resisting Insulation d-c | Test Voltage, kV: Cables with Ozone-resisting Insulation a-c | Test Voltage, kV: Cables with Ozone-resisting Insulation d-c |
|---|---|---|---|---|---|---|---|---|---|
| 8 | 8 | 49 | .060 | 0.84 | 0.93 | 3.5 | 10.5 | 6 | 18 |
| 6 | 8 | 49 | .060 | 0.93 | 1.03 | 3.5 | 10.5 | 6 | 18 |
| 4 | 6 | 49 | .060 | 1.08 | 1.20 | 3.5 | 10.5 | 6 | 18 |
| 3 | 6 | 49 | .060 | 1.17 | 1.27 | 3.5 | 10.5 | 6 | 18 |
| 2 | 5 | 133 | .060 | 1.27 | 1.34 | 3.5 | 10.5 | 6 | 18 |
| 1 | 4 | 133 | .080 | 1.44 | 1.52 | 4 | 12 | 7.5 | 22.5 |
| 1/0 | 3 | 133 | .080 | 1.52 | 1.68 | 4 | 12 | 7.5 | 22.5 |
| 2/0 | 2 | 133 | .080 | 1.65 | 1.79 | 4 | 12 | 7.5 | 22.5 |
| 3/0 | 1 | 133 | .080 | 1.77 | 1.93 | 4 | 12 | 7.5 | 22.5 |
| 4/0 | 1/0 | 259 | .080 | 1.92 | 2.13* | 4 | 12 | 7.5 | 22.5 |
| 250 | 2/0 | 259 | .095 | 2.16* | 2.39* | 5 | 15 | 8.5 | 25.5 |

*These diameters apply to cables with extra-heavy-duty jackets only (see 7.1).

Copyright National Electrical Manufacturers Association
Provided by IHS under license with NEMA
No reproduction or networking permitted without license from IHS
Not for Resale

## Table 7-12
## TWO- AND THREE-CONDUCTOR PORTABLE CABLES TYPE PCG (POWER, CONTROL, GROUND) FOR 0 TO 600 VOLTS

| Power Conductor Size, AWG or kcmil (See Table 3-24) | Grounding Conductor Size AWG | Grounding Conductor Number of Strands | Power Conductor Insulation Thickness inch | Outside Diameters: Two-Conductor Cables, inches | Outside Diameters: Three-Conductor Cables, inches | Test Voltage, kV: Cables with Other than Ozone-resisting Insulation a-c | Cables with Other than Ozone-resisting Insulation d-c | Cables with Ozone-resisting Insulation a-c | Cables with Ozone-resisting Insulation d-c |
|---|---|---|---|---|---|---|---|---|---|
| 8 | 8 | 49 | .060 | 0.94 | 1.03 | 3.5 | 10.5 | 6 | 18 |
| 6 | 8 | 49 | .060 | 0.98 | 1.18 | 3.5 | 10.5 | 6 | 18 |
| 4 | 6 | 49 | .060 | 1.10 | 1.29 | 3.5 | 10.5 | 6 | 18 |
| 3 | 6 | 49 | .060 | 1.20 | 1.31 | 3.5 | 10.5 | 6 | 18 |
| 2 | 5 | 133 | .060 | 1.29 | 1.39 | 4 | 12 | 7.5 | 22.5 |
| 1 | 4 | 133 | .080 | 1.44 | 1.52 | | | | |
| 1/0 | 3 | 133 | .080 | 1.52 | 1.68 | 4 | 12 | 7.5 | 22.5 |
| 2/0 | 2 | 133 | .080 | 1.65 | 1.79 | 4 | 12 | 7.5 | 22.5 |
| 3/0 | 1 | 133 | .080 | 1.77 | 1.93 | 4 | 12 | 7.5 | 22.5 |
| 4/0 | 1/0 | 259 | .080 | 1.92 | 2.13* | 4 | 12 | 7.5 | 22.5 |
| 250 | 2/0 | 259 | .095 | 2.16* | 2.39* | 5 | 15 | 8.5 | 25.5 |
| 10** | ... | ... | .045** | ... | ... | 3 | 9 | 5 | 15 |

*These diameters apply to cables with extra-heavy-duty jackets only (see 7.1).

**Control conductors for all PCG cables shall not be smaller than 10 AWG, with a minimum of 49 strands and .030 inches insulation and, if necessary, a broad covering. The ac test voltage shall be 3.0 kV for 15 seconds (See 3.22.4.5)

## Table 7-13
## SINGLE-CONDUCTOR NONSHIELDED PORTABLE POWER CABLES FOR TEMPORARY GROUNDING OF OVERHEAD LINES

| Conductor Size, AWG* | Insulation Thickness, inch | Jacket Thickness, inches | Outside Diameter, inches | Test Voltage, kV: Cables with Ozone-resisting Insulation a-c | Cables with Ozone-resisting Insulation d-c |
|---|---|---|---|---|---|
| 8 | .125 | .095 | 0.60 | 11.5 | 34.5 |
| 6 | .125 | .095 | 0.65 | 11.5 | 34.5 |
| 4 | .125 | .095 | 0.70 | 11.5 | 34.5 |
| 3 | .125 | .095 | 0.74 | 11.5 | 34.5 |
| 2 | .125 | .095 | 0.77 | 11.5 | 34.5 |
| 1 | .125 | .095 | 0.82 | 11.5 | 34.5 |
| 1/0 | .125 | .095 | 0.86 | 11.5 | 34.5 |
| 2/0 | .125 | .095 | 0.92 | 11.5 | 34.5 |
| 3/0 | .125 | .095 | 0.97 | 11.5 | 34.5 |
| 4/0 | .125 | .095 | 1.04 | 11.5 | 34.5 |

*(See Table 3.24)

Copyright National Electrical Manufacturers Association
Provided by IHS under license with NEMA
No reproduction or networking permitted without license from IHS

Not for Resale

Copyright National Electrical Manufacturers Association
Provided by IHS under license with NEMA
No reproduction or networking permitted without license from IHS

Not for Resale

# Section 8
# SUPPLEMENT FOR MINE POWER FEEDER CABLES

The requirements of Sections 1 through 6 shall be met except as modified in Section 8.

## 8.1 SCOPE

This section covers heat, moisture, and ozone resistant rubber-insulated, three conductor, thermosetting or thermoplastic jacketed cables with grounding conductors in sizes #6 AWG through 500 kcmil for use as connections between units of mine distribution systems at nominal alternating current voltages of 2,001 to 15,000 volts. These cables shall be one of the following types:

Type MP -- With three grounding conductors
Type MP-GC -- With two grounding conductors and one ground check conductor.

The grades of insulation shall be suitable for operation at maximum conductor temperatures of 70°C or 85°C (see Table 8-1).

## 8.2 GENERAL REQUIREMENTS

The requirements of Section 4 shall be met where applicable. Ampacities and minimum bending radii are given in the appendices.

## 8.3 CONDUCTORS

### 8.3.1 Power Conductors Shall Be As Specified In Section 4.3.1.

### 8.3.2 Conductor Shielding

Conductor shielding in accordance with Section 3.14 shall be applied over each power conductor.

### 8.3.3 Grounding Conductors

Grounding conductors shall be Class B or C stranded annealed coated copper and shall meet the requirements given in Section 2. The size of each grounding conductor shall be in accordance with Table 4-1.

### 8.3.4 Ground Check Conductor

The ground check conductor shall be Class B or C stranded annealed coated or uncoated copper of the minimum size shown in Table 4-1 and shall meet the requirements given in Section 2.

## 8.4 INSULATION

### 8.4.1 Power Conductors

The insulation on the power conductors shall meet the requirements of Table 8-1. The average thickness shall be not less than that given in Table 8-4 to 8-5. The minimum thickness shall be not less than 90 percent of these values.

### 8.4.2 Ground Check Conductor

The insulation on the ground check conductor shall be one given in Table 3-2. The average thickness on the 10 AWG shall not be less than 30 mils, and not less than 0.045 inch on the 8 AWG. The minimum thickness at any point shall not be less than 90 percent of these values.

## 8.5 INSULATION SHIELDING

Each power conductor shall be shielded in accordance with Section 4.5.

## 8.6 IDENTIFICATION

Power conductors shall be identified as black, white, and red. The ground check conductor shall be covered with a closely woven cotton or rayon braid which is colored yellow or with a yellow insulation.

## 8.7 CONDUCTOR ASSEMBLY

The conductor assembly shall have a left hand lay. A grounding conductor shall be placed in continuous contact with the metallic shield in each interstice of Type MP cables and in two interstices of Type MP-GC cables. The ground check of Type MP-GC cable shall be placed between the black and white conductors. When required, a binder tape and/or threads shall be used over the conductor assembly.

## 8.8 JACKET

A crosslinked jacket which meets the requirements of Table 3-4, or a thermoplastic jacket which meets the requirements of Table 4-7, shall be applied over the conductor assembly. The average thickness of the jacket shall be not less than that given in Table 8-3 and the minimum shall be not less than 80 percent of these values.

### 8.8.1 Repairs

The jacket may be repaired in accordance with good commercial practice. Cables with repaired jackets must be capable of meeting all applicable requirements of this standard.

## 8.9 OUTSIDE DIAMETERS

The outside diameters of the completed cable shall be within plus 8 and minus 5 percent of the values given in Tables 8-4 and 8-5.

## 8.10 TESTS

The cable shall meet the test voltages and partial discharge requirements given in Table 8-4 and 8-5. The ground check conductors shall be tested in accordance with 3.22.4.5.

Copyright National Electrical Manufacturers Association
Provided by IHS under license with NEMA
No reproduction or networking permitted without license from IHS
Not for Resale

**Table 8-1**
**OZONE-RESISTING RUBBER INSULATION REQUIREMENTS**

| Physical Requirements | Natural or Synthetic | Butyl |
|---|---|---|
| Temperature Rating | | |
| Wet or Dry, °C | 70/75 | 85 |
| Voltage Rating | | |
| Maximum, kV | | |
| 100% and 133% Insulation Level | 15 | 15 |
| Physical Properties, | | |
| Tensile Strength, min. , psi | 450 | 600 |
| Elongation, min., percent | 250 | 350 |
| Set, maximum. percent | 25 | 25 |
| Ozone Resistance | | |
| Exposure for 3 hours | | |
| Percent ozone, by volume | 0.01–0.015 | 0.025–0.03 |
| Air Oven Aging for 168 hours | | |
| Tensile Strength, after aging, psi | 400 | — |
| Elongation, minimum, percent | 200 | — |
| Test Temperature, °C ±1 °C | 70 | — |
| Tensile Strength, percent of original | — | 60 |
| Elongation, percent of original | — | 60 |
| Test Temperature, °C ±1 °C | — | 100 |
| Air Pressure Heat Test —40 hours | | |
| Tensile Strength, percent of orig. | — | 50 |
| Elongation, percent of original | — | 50 |
| Test Temperature, °C ±1 °C | — | 127 |
| Oxygen Pressure Test —48 hours | | |
| Tensile Strength, after aging, psi | 400 | — |
| Elongation, minimum, percent | 200 | — |
| Test Temperature, °C ±1 °C | 70 | — |
| *Electrical Requirements* | | |
| Dielectric Constant at °C ±1 °C | 50 | 75 |
| After 24 hours, max. | 5.0 | 4.5 |
| Increase in Capacitance at °C ±1 °C | 50 | 75 |
| Maximum percent | | |
| 1–14 days | 10.0 | 5.0 |
| 7–14 days | 3.0 | 3.0 |
| Stability Factor after 14 days, max. | 1.0 | 1.0 |
| or | | |
| Alternate to Stability Factor | | |
| (Stability Factor Difference) | | |
| 1-14 days, max. | 0.5 | 0.5 |
| Insulation Resistance at 15.6 °C | | |
| Constant (K) | 2,000 | 20,000 |
| Power Factor, after 24 hours, at °C ±1 °C | 50 | 75 |
| Percent, maximum | 5.0 | 3.5 |
| CABLES RATED 5001 AND ABOVE | | |
| Short Time Dielectric Strength Test Specimens | | |
| tested at 2 x ac test voltage for 5 minutes | Pass | — |
| Cold Bend & Long Time Dielectric | | |
| Strength After Conditioning Samples shall pass | | |
| 2 hrs. ac test at specified ac voltage | Pass | — |

Copyright National Electrical Manufacturers Association
Provided by IHS under license with NEMA
No reproduction or networking permitted without license from IHS

Not for Resale

**Table 8-2**
**NOMINAL DIRECT-CURRENT RESISTANCE OF MEDIUM HARD-DRAWN COATED AND UNCOATED COPPER CONDUCTORS, CONCENTRIC STRANDED, CLASS B AND C**

| | | Coated Copper | | Uncoated Copper | |
|---|---|---|---|---|---|
| Conductor Size AWG or kcmil | Class of Stranding | 20°C ohms per 1000 ft. | 25°C ohms per 1000 ft. | 20°C ohms per 1000 ft. | 25°C ohms per 1000 ft. |
| 6 | B and C | 0.436 | 0.444 | 0.417 | 0.425 |
| 4 | B and C | 0.274 | 0.279 | 0.262 | 0.267 |
| 2 | B and C | 0.172 | 0.176 | 0.165 | 0.168 |
| 1 | B and C | 0.137 | 0.139 | 0.131 | 0.133 |
| 1/0 | B and C | 0.108 | 0.110 | 0.104 | 0.106 |
| 2/0 | B and C | 0.0859 | 0.0876 | 0.0822 | 0.0838 |
| 3/0 | B and C | 0.0681 | 0.0695 | 0.0652 | 0.0665 |
| 4/0 | B | 0.0536 | 0.0547 | 0.0517 | 0.0527 |
| 4/0 | C | 0.0540 | 0.0551 | 0.0517 | 0.0527 |
| 250 | B and C | 0.0457 | 0.0466 | 0.0438 | 0.0446 |
| 300 | B and C | 0.0381 | 0.0389 | 0.0365 | 0.0372 |
| 350 | B and C | 0.0327 | 0.0333 | 0.0313 | 0.0319 |
| 400 | B | 0.0284 | 0.0289 | 0.0274 | 0.0279 |
| 400 | C | 0.0286 | 0.0292 | 0.02274 | 0.0279 |
| 450 | B | 0.0252 | 0.0257 | 0.0243 | 0.0248 |
| 450 | C | 0.0254 | 0.0259 | 0.0243 | 0.0248 |
| 500 | B | 0.0229 | 0.0233 | 0.0219 | 0.0223 |
| 500 | C | 0.0229 | 0.0233 | 0.0219 | 0.0223 |

**Table 8-3**
**JACKET THICKNESS**

| Calculated Diameter of Cable Under Jacket, inches | Jacket Thickness, inch |
|---|---|
| 1.500 or less | 110 |
| 1.501 –2.500 | 140 |
| 2.501–3.500 | 170 |

Copyright National Electrical Manufacturers Association
Provided by IHS under license with NEMA
No reproduction or networking permitted without license from IHS

Not for Resale

**Table 8-4**
**INSULATION THICKNESS AND OUTSIDE DIAMETERS**

| Conductor Size, AWG or kcmil | Insulation Thickness, inches | Outside Diameter, inches | Test Voltage, kV | | Minimum Partial Discharge Extinction Level, kV** |
|---|---|---|---|---|---|
| | | | ac | dc | |
| | | 2001 to 5000 Volts* | | | |
| 6 | .155 | 1.49 | 13 | 35 | 4.0 |
| 4 | .155 | 1.60 | 13 | 35 | 4.0 |
| 2 | .155 | 1.74 | 13 | 35 | 4.0 |
| 1 | .155 | 1.85 | 13 | 35 | 4.0 |
| | | | 13 | 35 | 4.0 |
| 1/0 | .155 | 1.94 | 13 | 35 | 4.0 |
| 2/0 | .155 | 2.05 | 13 | 35 | 4.0 |
| 3/0 | .155 | 2.16 | 13 | 35 | 4.0 |
| 4/0 | .155 | 2.29 | 13 | 35 | 4.0 |
| 250 | .170 | 2.52 | 13 | 35 | 4.0 |
| 300 | .170 | 2.63 | 13 | 35 | 4.0 |
| 350 | .170 | 2.74 | 13 | 35 | 4.0 |
| 400 | .170 | 2.84 | 13 | 35 | 4.0 |
| 450 | .170 | 2.94 | 13 | 35 | 4.0 |
| 500 | .170 | 3.03 | 13 | 35 | 4.0 |

*The actual operating voltage shall not exceed the rated circuited voltages by more than (a) 5 percent during continous operation or (b) 10 percent during emergencies lasting not more than 15 minutes.

**Unless otherwise indicated, the cable shall be rated at 100 percent insulation level.

Copyright National Electrical Manufacturers Association
Provided by IHS under license with NEMA
No reproduction or networking permitted without license from IHS

Not for Resale

## Table 8-5
## INSULATION THICKNESS AND OUTSIDE DIAMETERS

| 100% Insulation Level (Grounded Neutral) | | | | | | 133% Insulation Level (Ungrounded Neutral) | | | | |
|---|---|---|---|---|---|---|---|---|---|---|
| Conductor Size, AWG or kcmil | Insulation Thickness, inch | Outside Diameter, inches | Test Voltage, kV a-c | Test Voltage, kV d-c | Minimum Partial-discharge Extinction Level, kV | Insulation Thickness, inches | Outside Diameter, inches | Test Voltage kV a-c | Test Voltage kV d-c | Minimum Partial-discharge Extinction Level, kV |
| | | | | 5001 TO 8000 VOLTS* | | | | | | |
| 6 | .190 | 1.65 | 18 | 45 | 6.0 | .250 | 1.95 | 22 | 55 | 8.0 |
| 4 | .190 | 1.75 | 18 | 45 | 6.0 | .250 | 2.05 | 22 | 55 | 8.0 |
| 2 | .190 | 1.92 | 18 | 45 | 6.0 | .250 | 2.18 | 22 | 55 | 8.0 |
| 1 | .190 | 2.03 | 18 | 45 | 6.0 | .250 | 2.30 | 22 | 55 | 8.0 |
| 1/0 | .190 | 2.12 | 18 | 45 | 6.0 | .250 | 2.42 | 22 | 55 | 8.0 |
| 2/0 | .190 | 2.22 | 18 | 45 | 6.0 | .250 | 2.52 | 22 | 55 | 8.0 |
| 3/0 | .190 | 2.33 | 18 | 45 | 6.0 | .250 | 2.62 | 22 | 55 | 8.0 |
| 4/0 | .190 | 2.48 | 18 | 45 | 6.0 | .250 | 2.75 | 222 | 55 | 8.0 |
| 250 | .190 | 2.58 | 18 | 45 | 6.0 | .250 | 2.85 | 22 | 55 | 8.0 |
| 300 | .190 | 2.70 | 18 | 45 | 6.0 | .250 | 2.97 | 22 | 55 | 8.0 |
| 350 | .190 | 2.81 | 18 | 45 | 6.0 | .250 | 3.08 | 22 | 55 | 8.0 |
| 400 | .190 | 2.91 | 18 | 45 | 6..0 | .250 | 3.18 | 22 | 55 | 8.0 |
| 450 | .190 | 3.01 | 18 | 45 | 6.0 | .250 | 3.28 | 22 | 55 | 8.0 |
| 500 | .190 | 3.10 | 18 | 45 | 6.0 | .250 | 3.37 | 22 | 55 | 8.0 |
| | | | | 8001 TO 15000 VOLTS* | | | | | | |
| 2 | .295 | 2.42 | 27 | 70 | 11.0 | ... | ... | ... | ... | ... |
| 1 | .295 | 2.53 | 27 | 70 | 11.0 | .420 | 3.07 | 33 | 80 | 15.0 |
| 1/0 | .295 | 2.62 | 27 | 70 | 11.0 | .420 | 3.16 | 33 | 80 | 15.0 |
| 2/0 | .295 | 2.74 | 27 | 70 | 11.0 | .420 | 3.26 | 33 | 80 | 15.0 |
| 3/0 | .295 | 2.83 | 27 | 70 | 11.0 | .420 | 3.37 | 33 | 80 | 15.0 |
| 4/0 | .295 | 2.95 | 27 | 70 | 11.0 | .420 | 3.52 | 33 | 80 | 15.0 |
| 250 | .295 | 3.05 | 27 | 70 | 11.0 | ... | ... | ... | ... | ... |
| 300 | .295 | 3.17 | 27 | 70 | 11.0 | ... | ... | ... | ... | ... |
| 350 | .295 | 3.28 | 27 | 70 | 11.0 | ... | ... | ... | ... | ... |
| 400 | .295 | 3.42 | 27 | 70 | 11.0 | ... | ... | ... | ... | ... |
| 450 | .295 | 3.51 | 27 | 70 | 11.0 | ... | ... | ... | ... | ... |
| 500 | .295 | ... | 27 | 70 | 11.0 | ... | ... | ... | ... | ... |

* The actual operating voltage shall not exceed the rated circuit voltages by more than (a) 5 percent during continuous operation or (b) 10 percent during emergencies lasting not more than 15 minutes.

Copyright National Electrical Manufacturers Association
Provided by IHS under license with NEMA
No reproduction or networking permitted without license from IHS

Not for Resale

Copyright National Electrical Manufacturers Association
Provided by IHS under license with NEMA
No reproduction or networking permitted without license from IHS

Not for Resale

# Section 9
# APPENDICES

## Appendix A
## ABBREVIATIONS AND SYMBOLS

ac -alternating current
AWG-American Wire Gauge
BWG-Birmingham Wire Gauge
C -Celsius (centigrade)
dc -direct current
F -Fahrenheit
g/m -grams per meter
Hz -hertz (electrical frequency in cycles per second)
kcmil-thousands of circular mils (formerly MCM)
kg -kilogram(s)
km -kilometer(s)
kN/m -Kilonewtons per meter
kV -kilovolt(s)
MPa -megapascals
mm -millimeter(s)
psi -pounds per square inch
% -percent
± -plus or minus

Copyright National Electrical Manufacturers Association
Provided by IHS under license with NEMA
No reproduction or networking permitted without license from IHS

Not for Resale

Copyright National Electrical Manufacturers Association
Provided by IHS under license with NEMA
No reproduction or networking permitted without license from IHS

Not for Resale

# Appendix B
# DEFINITIONS FOR MAXIMUM TERMPERATURE OF CONDUCTORS IN INSULATED WIRE AND CABLE

## B.1.1 MAXIMUM CONDUCTOR TEMPERATURE—OPERATING

The highest conductor temperature attained by any part of the cable line under operating current load.

## B.1.2 MAXIMUM CONDUCTOR TEMPERATURE—EMERGENCY OVERLOAD

The highest conductor temperature attained by any part of the cable line during emergency overload of specified time, magnitude, and frequency of application.

## B.1.3 MAXIMUM CONDUCTOR TEMPERATURE—SHORT CIRCUIT

The highest conductor temperature attained by any part of the cable during a short circuit of specified time and magnitude.

Copyright National Electrical Manufacturers Association
Provided by IHS under license with NEMA
No reproduction or networking permitted without license from IHS

Not for Resale

Copyright National Electrical Manufacturers Association
Provided by IHS under license with NEMA
No reproduction or networking permitted without license from IHS

Not for Resale

## Appendix C
## EMERGENCY OVERLOAD RATING FOR INSULATED CABLES

| Voltage Rating, Volts | Maximum Temperature Rating of Insulation Depress C | | | | | |
|---|---|---|---|---|---|---|
| | 60 | 70 | 75 | 80 | 85 | 90 |
| | Maximum Emergency Overload Temperature Degrees C | | | | | |
| 2000 or Less | 85 | ... | 95 | ... | 105 | 130 |
| 2001–5000 | ... | ... | 95 | ... | 105 | 130 |
| 5001–8000 | ... | ... | 90 | ... | 100 | 130 |
| 8001–15000 | ... | 85 | ... | ... | 100 | 130 |
| 15001 and over | ... | 85 | ... | 95 | ... | 130 |

Operations at the emergency overload temperature shall not exceed 100 hours in any twelve consecutive months not more than 500 hours during the lifetime of the cable.

Lower temperatures for emergency overload conditions may be required because of the type of material used in the cable, joints, and terminations or because of cable environmental conditions.

Copyright National Electrical Manufacturers Association
Provided by IHS under license with NEMA
No reproduction or networking permitted without license from IHS

Not for Resale

Copyright National Electrical Manufacturers Association
Provided by IHS under license with NEMA
No reproduction or networking permitted without license from IHS

Not for Resale

# Appendix D
# ICEA PUBLICATIONS, ASTM, AND NEMA STANDARDS

**D1.1** ICEA Publications

| | |
|---|---|
| T-24-380 Rev. 12/80 | Guide for Partial-Discharge Test Procedure—See Note 1 |
| T-28-562 | Test Method for Measurement of Hot Creep of Polymeric Material—See Note 1 |
| P-46-426/IEEE #S-135 (SH007096) | Power Cable Ampacities—See Note 2 |

**D2.1** ASTM Standards—See Note 4

ASTM Standards to which reference is made in this standard.

| | |
|---|---|
| B 2-88 | Medium-Hard Drawn Copper Wire, Specification for |
| B 3-90 | Soft or Annealed Copper Wire, Specification for |
| B 5-89 | Tough-Pitch Electrolytic Copper Refinery Shapes, Specification for |
| B 8-86 | Concentric-Lay Stranded Copper Conductors, Hard, Medium-Hard, or Soft, Specification for |
| B 33-81 (1985) | Tinned Soft or Annealed Copper Wire for Electrical Purposes, Specification for |
| B 172-90 | Rope-Lay-Stranded Copper Conductors Having Bunch-Stranded Members, for Electrical Conductors, Specification for |
| B 174-90 | Bunch-Stranded Copper Conductors for Electrical Conductors, Specification for |
| B 189-90 | Lead-Coated and Lead-Alloy Soft Copper Wire for Electrical Purposes, Specification for |
| B 193-87 | Resistivity of Electrical Conductor Materials, Test for |
| B 230-89 | Aluminum-Alloy 1350-H 19 Wire, Electrical Purposes, Specification for |
| B 231-90 | Concentric-Lay-Stranded Aluminum-Alloy 1350 Conductors, Specification for |
| B 233-85 | Aluminum 1350 Drawing Stock for Electrical Purposes, Specification for |
| B 263-89 | Cross-Sectional Area of Strands Conductors, Determination of |
| B 400-86 | Compact-Round Concentric-Lay-Stranded 1350 Aluminum-Alloy Conductors, Specification for |
| B 496-90 | Compact Round Concentric-Lay-Stranded Copper Conductors, Specification for |
| B 609-85 | Aluminum 1350 Round Wire, Annealed, and Intermediate Tempers for Electrical Purposes, Specification for |
| D 257-91 | DC Resistance or Conductance of Insulating Materials, Tests for |
| D 412-87 | Rubber Properties in Tension, Test for |
| D 471-79(1991) | Rubber Property - Effects of Liquids, Test for |
| D 746-79(1987) | Brittleness Temperature of Plastics and Elastomers by Impact, Test for |
| D 1693-70(1988) | Environmental Stress-Cracking of Ethylene Plastics, Test for |
| D 2765-90 | Determination of Gel Content and Swell Ratio of Crosslinked Ethylene Plastics,Test for |
| D 3349-86 | Absorption Coefficient of Carbon Black Pigmented Ethylene Plastics, Test for |
| E 8-90a | Tension Testing of Metallic Materials |

Copyright National Electrical Manufacturers Association
Provided by IHS under license with NEMA
No reproduction or networking permitted without license from IHS

Not for Resale

**D3.1** NEMA Standards—See Note 4

WC 26-1990 Wire & Cable Packaging

Note 1: Copies may be obtained from the Insulated Cable Engineers Association, Inc., P.O. Box 440, South Yarmouth, MA 02664, USA

Note 2: Copies may be obtained for IEEE Service Center, 445 Hoes Lane, Piscataway, NJ 08854, USA

Note 3: Copies may be obtained from the American Society for Testing and Materials, 1916 Race Street, Philadelphia, PA 19103, USA

Note 4: Copies may be obtained for NEMA Sales Office, National Electrical Manufacturers Association, 2101 L Street, N.W., Washington, DC 20037, USA

Copyright National Electrical Manufacturers Association
Provided by IHS under license with NEMA
No reproduction or networking permitted without license from IHS

Not for Resale

# Appendix E
# SHIELDING

## E1.1 DEFINITION OF SHIELDING

Shielding of an electric power cable is the practice of confining the dielectric field of the cable to the insulation of the conductor or conductors. It is accomplished by means of a conductor stress control layer and an insulation shield.

## E2.1 FUNCTIONS OF SHIELDING

**E2.1.1** A conductor stress control layer is employed to preclude excessive voltage stress on voids between conductor and insulation. To be effective, it must adhere to, or remain in intimate contact with, the insualtion under all conditions.

**E2.1.2 An insulation shield has a number of functions:**

A. To confine the dielectric field within the cable.
B. To obtain symmetrical radial distribution of voltage stress within the dielectric, thereby minimizing the possibility of surface discharges by precluding excessive tangential and longitudinal stresses.
C. To protect cable connected to overhead lines or otherwise subject to induced potentials.
D. To limit radio interference.
E. To reduce the hazard of shock. This advantage is obtained only if the shield is grounded. If not grounded, the hazard of shock may be increased.

## E3.1 USE OF INSULATION SHIELDING

The use of shielding involves consideration of installation and operating conditions. Definite rules cannot be established on a practical basis for all cases, but the following features should be considered as a working basis for the use of shielding.

**E3.1.1** Where there is not metallic covering or shield over the insulation, the electric field will be partly in the insulation and partly in whatever lies between the insulation and ground. The external field, if sufficiently intense in air, will generate surface discharge and convert atmospheric oxygen into ozone which may be destructive to insulations and to protective jackets. If the surface of the cable is separated from ground by a thin layer of air and the air gap is subjected to a voltage stress which exceeds the dielectric strength of air, a discharge will occur, causing ozone formation.

**E3.1.2** The ground may be either a metallic conduit, a damp nonmetallic conduit or a metallic binding tape or rings on an aerial cable, a loose metallic sheath, etc. Likewise, damage to nonshielded cable may result when the surface of the cable is moist, or covered with soot, soapy grease or other conducting film, and the external field is partly confined by such conducting film so that the charging current is carried by the file to some spot where it can discharge to ground. The resultant intensity of discharge may be sufficient to cause burning of the insulation or jacket.

**E3.1.3** Where maximum safety is desired, shielding is recommended, since contact with the energized cable can present a shock hazard for those who handle or contact those cables. Shielding used to reduce hazards of shock should have a resistance low enough to operater protective equipment in case of a fault. In some cases the efficiency of protective equipment may require proper size ground wires as a supplement to shielding. The same considerations apply to exposed installations, where cables may be handled by personnel who may not be aquainted with the hazards involved.

## E4.1 GROUDING OF THE INSULATION SHIELD

**E4.1.1** The insulation shield must be grounded at least at one end and preferably at two or more locations. It is recommended that the shield be grounded at cable terminations and at splices and taps. Stress cones should be made at all shield terminations.

**E4.1.2** The shield should operate at or near ground potential at all times. Frequent grounding of shields reduces the possibility of open sections on nonmetallic covered cable. Multiple grounding of shields is desirable in order to improve the reliability and safety of the circuit. All grounding connections should be made to the shield in such a way as to provide a permanent low resistance bond. Shielding which does not have adequate ground connection due to discontinuity of the shields or to improper termination may be more dangerous than nonshielded nonmetallic sheathed cable and hazardous to life.

## E5.1 SHIELD MATERIALS

Two distinct types of materials are employed in constructing cable shields.

**E5.1.1** Nonmetallic shields may consist of a conducting tape or layer of conducting compound. The tape may be conducting compound, fibrous tape faced or filled with conducting compound, or conducting fibrous tape.

**E.5.1.2** Metallic shields should be nonmagnetic and may consist of tape, braid, concentric serving of wires, or a sheath.

## E6.1 SPLICES AND TERMINATIONS

**E6.1.1** To prevent excessive leakage current and flashover, metallic and nonmetallic insulation shields, in-

Copyright National Electrical Manufacturers Association
Provided by IHS under license with NEMA
No reproduction or networking permitted without license from IHS
Not for Resale

cluding any conducting residue on the insulation surface must be removed completely at splices and terminations.

**E6.1.2** An outer extruded insulation shield shall be removable without damaging or imparting conductivity to the underlying insulation. This may be accomplished by the aid of heat or by the use of a suitable solvent.

Copyright National Electrical Manufacturers Association
Provided by IHS under license with NEMA
No reproduction or networking permitted without license from IHS

Not for Resale

# Appendix F
# MINIMUM BENDING RADIUS FOR CABLES

## F1.1 SCOPE

This appendix contains the minimum values for the radius to which insulated cables may be bent for permanent training during installation. These limits do not apply to conduit bends, sheaves, or other curved surfaces around which the cable may be pulled under tension while being installed; larger bends are required for such conditions. In all cases the minimum radius specified refers to the inner surface of the cable and not to axis of the cable. For the drum diameter of reels, see Appendix G.

## F2.1 PORTABLE CABLES

The minimum bending radius for portable cables during installation and handling in service is six times the cable diameter for cables rated 5000 volts and less, and eight times the cable diameter for cables rated over 5000 volts. For flat twin cables, the minor diameter is used to determine the bending radius.

## F3.1 MINE POWER FEEDER CABLES WITH METALLIC SHIELDING

The minimum bending radius for all cables with metallic shielding tapes is twelve times the overall diameter of the completed cable.

The minimum bending radius for all cables with wire and wire braid shields is eight times the overall diameter of the completed cable.

Copyright National Electrical Manufacturers Association
Provided by IHS under license with NEMA
No reproduction or networking permitted without license from IHS

Not for Resale

Copyright National Electrical Manufacturers Association
Provided by IHS under license with NEMA
No reproduction or networking permitted without license from IHS

Not for Resale

## Appendix G
## MINIMUM DRUM DIAMETER OF SHIPPING REELS*

*Excerpted from NEMA Standards Publication/No. WC 26-1984 "Wire and Cable Packaging."

| Type of Cable | Minimum Drum Diameter, as a Multiple of Outside Diameter of Cable |
|---|---|
| A. Single- and multiple-conductor nonmetallic-covered cable | |
| 1. Nonshielded and wire shielded, including cables with metal braid and metal wire shield | |
| a. 0–2000 volts | 10 |
| b. Over 2000 volts | 12 |
| 2. Tape shielded | 14 |

**Outside Diameter

For "Flat-twin" cables (where the cable is placed upon the reel with its flat side against the drum), the minor outside diameter shall be multiplied by the appropriate factor to determine the minimum drum diameter.

Copyright National Electrical Manufacturers Association
Provided by IHS under license with NEMA
No reproduction or networking permitted without license from IHS

Not for Resale

Copyright National Electrical Manufacturers Association
Provided by IHS under license with NEMA
No reproduction or networking permitted without license from IHS

Not for Resale

# Appendix H
# AMPACITIES AND VOLTAGE RATINGS OF PORTABLE CABLES

## H1.1 AMPACITIES (CURRENT-CARRYING CAPACITY IN AMPERES)

The recommended ampacities for the various sizes and types of portable cables listed in H.2.1 are given in Table H-1. These values are based on an ambient temperature of 40°C (104°F). Correction factors for ampacities at various ambient temperatures are as follows:

| Ambient Temperature, Degrees C | Multiplying Correction Factors |
|---|---|
| 10 | 1.26 |
| 20 | 1.18 |
| 30 | 1.10 |
| 40 | 1.00 |
| 50 | 0.90 |

When the cables are used with one or more layers wound on a reel, the ampacities shall be corrected as follows:

| Number of Layers | Multiplying Correction Factors |
|---|---|
| 1 | 0.85 |
| 2 | 0.65 |
| 3 | 0.45 |
| 4 | 0.35 |

## H2.1 VOLTAGE RATINGS

It is recommended that the various types of portable cables be limited to the following maximum circuit voltages:

2000 Volts
- Single-conductor nonshielded
- Type W and G, two conductor
- Type W, three, four, five, and six conductor
- Type G --four and five conductor
- Type G-GC --three conductor
- Type PG --two and three conductor
- Type PCG --two and three conductor
- Type SHC-GC--three conductor

5000 Volts
- Type G* three conductor

25000 Volts
- Type SH single conductor
- Types SHD, SHD-GC, and SHD-CGC

*Shielded cables provide a higher level of safety at ratings over 2000 volts

Copyright National Electrical Manufacturers Association
Provided by IHS under license with NEMA
No reproduction or networking permitted without license from IHS

Not for Resale

Copyright National Electrical Manufacturers Association
Provided by IHS under license with NEMA
No reproduction or networking permitted without license from IHS
Not for Resale







**Table H-1**

**AMPACITIES FOR PORTABLE POWER CABLES, AMPERES PER CONDUCTOR**

| | Single Conductor | | | | | Three Conductor | | | | | | |
|---|---|---|---|---|---|---|---|---|---|---|---|---|
| Power Conductor Size, AWG or kcmil | 2000 Volts or Less Nonshielded | 2001-8000 Volts* Shielded | 8001-15000 Volts* Shielded | 15001-25000 Volts* Shielded | Two Conductor, 2000 Volts or Less | 5000 Volts or Less Nonshielded | 8000 Volts or Less Shielded | 8001-15000 Volts Shielded | 15001-25000 Volts Shielded | Four Conductor 2000 Volts or Less | Five Conductor 2000 Volts or Less | Six Conductor 2000 Volts or Less |
| 8 | 83 | ... | ... | ... | 72 | 59 | ... | ... | ... | 54 | 50 | 48 |
| 6 | 109 | 112 | ... | ... | 95 | 79 | 93 | ... | ... | 72 | 68 | 64 |
| 4 | 145 | 148 | ... | ... | 127 | 104 | 122. | ... | ... | 93 | 88 | 83 |
| 3 | 167 | 171 | ... | ... | 145 | 120 | 140 | ... | ... | 106 | 100 | 95 |
| 2 | 192 | 195 | 195 | ... | 167 | 138 | 159 | 164 | 178 | 122 | 116 | 110 |
| 1 | 223 | 225 | 225 | 222 | 191 | 161 | 184 | 187 | 191 | 143 | 136 | 129 |
| 1/0 | 258 | 260 | 259 | 255 | 217 | 186 | 211 | 215 | 218 | 165 | ... | ... |
| 2/0 | 298 | 299 | 298 | 293 | 250 | 215 | 243 | 246 | 249 | 192 | ... | ... |
| 3/0 | 345 | 345 | 343 | 337 | 286 | 249 | 279 | 283 | 286 | 221 | ... | ... |
| 4/0 | 400 | 400 | 397 | 389 | 328 | 287 | 321 | 325 | 327 | 255 | ... | ... |
| 250 | 445 | 444 | 440 | 430 | 363 | 320 | 355 | 359 | 360 | 280 | ... | ... |
| 300 | 500 | 496 | 491 | 480 | 400 | 357 | 398 | ... | ... | 310 | ... | ... |
| 350 | 552 | 549 | 543 | 529 | 436 | 394 | 435 | ... | ... | 335 | ... | ... |
| 400 | 600 | 596 | 590 | 572 | 470 | 430 | 470 | ... | ... | 356 | ... | ... |
| 450 | 650 | 640 | 633 | 615 | 497 | 460 | 503 | ... | ... | 377 | ... | ... |
| 500 | 695 | 688 | 678 | 659 | 524 | 487 | 536 | ... | ... | 395 | ... | ... |
| 550 | 737 | 732 | ... | ... | ... | ... | ... | ... | ... | ... | ... | ... |
| 600 | 780 | 779 | ... | ... | ... | ... | ... | ... | ... | ... | ... | ... |
| 650 | 820 | 817 | ... | ... | ... | ... | ... | ... | ... | ... | ... | ... |
| 700 | 855 | 845 | ... | ... | ... | ... | ... | ... | ... | ... | ... | ... |
| 750 | 898 | 889 | ... | ... | ... | ... | ... | ... | ... | ... | ... | ... |
| 800 | 925 | 925 | ... | ... | ... | ... | ... | ... | ... | .... | ... | .... |
| 900 | 1010 | 998 | ... | ... | ... | ... | ... | ... | ... | ... | ... | ... |
| 1000 | 1076 | 1061 | ... | ... | ... | ... | ... | ... | ... | ... | .... | ... |

*These ampacities are based on single isolated cable in air operated with open-circuited shield.

NOTE: These ampacities are based on a conductor temperature of 90°C and an ambient air temperature of 40°C.

Correction Factors for ampacities at other operating temperatures are as follows:

| Operating Temperature Degrees C | Multiplying Correction Factor |
|---|---|
| 70 | 0.800 |
| 75 | 0.855 |
| 80 | 0.905 |
| 85 | 0.955 |

These factors may be used to calculate ampacities for cables in the supplemental section.

# Appendix I
# AMPACITIES FOR THREE-CONDUCTOR MINE POWER CABLES 2001 TO 15000 VOLTS COPPER AND ALUMINUM

The ampacities for three-conductor mine power cables are shown in Table I-1.

**Table I-1**
**AMPACITIES FOR THREE-CONDUCTOR MINE POWER CABLES**

| Conductor Size, AWG or kcmil* | | Ampacities 2001 to 8000 Volts | | Ampacities 8001 to 15000 Volts | |
|---|---|---|---|---|---|
| Copper | Aluminum | Copper | Aluminum | Copper | Aluminum |
| 6 | 4 | 93 | 95 | ... | ... |
| 4 | 2 | 122 | 124 | ... | ... |
| 2 | 1/0 | 159 | 165 | 164 | 168 |
| 1 | 2/0 | 184 | 189 | 187 | 192 |
| 1/0 | 3/0 | 211 | 218 | 215 | 221 |
| 2/0 | 4/0 | 243 | 251 | 246 | 254 |
| 3/0 | 250 | 279 | 278 | 283 | 281 |
| 4/0 | 350 | 321 | 342 | 325 | 344 |
| 250 | 400 | 355 | 360 | 359 | 367 |
| 300 | 450 | 398 | 395 | 401 | 393 |
| 350 | 500 | 435 | 425 | 438 | 424 |
| 400 | ... | 470 | .. | 473 | ... |
| 450 | ... | 502 | ... | 504 | ... |
| 500 | ... | 536 | ... | 536 | ... |

*Ampacities are based on an ambient temperature of 40°C and a conductor temperature of 90°C taken from "Power Cable Ampacities", IPCEA Publication No. P-46-426 (IEEE Publications No. S-135). Vol. 1 for Copper Conductors and Vol 2. for aluminum conductors page 309.

Correction factors for ampacities at other operating temperatures are shown in Table I-2.

**Table I-2**
**CORRECTION FACTORS FOR AMPACITIES AT OTHER TEMPERATURES**

| Operating Temperature Degrees C | Multiplying Correction Factor |
|---|---|
| 70 | 0.800 |
| 75 | 0.855 |
| 80 | 0.905 |
| 85 | 0.955 |

These factors may be used to calculate ampacities for cables included in the supplemental section.

Correction factors for ampacities at various ambient temperatures are shown in Table I-3.

**Table I-3**
**CORRECTION FACTORS FOR AMPACITIES AT VARIOUS AMBIENT TEMPERATURES**

| Ambient Temperature, Degrees C | Multiplying Correction Factor |
|---|---|
| 10 | 1.26 |
| 20 | 1.18 |
| 30 | 1.10 |
| 40 | 1.00 |
| 50 | 0.90 |

Copyright National Electrical Manufacturers Association
Provided by IHS under license with NEMA
No reproduction or networking permitted without license from IHS

Not for Resale

# APPENDIX J
# FLEXIBLE CORDS AND REMOTE CONTROL AND DRILL CORDS

## J1.1 AMPACITIES OF FLEXIBLE CORDS

Ampacities of flexible cords are based on the number of current-carrying conductors. The ampacities shown in Table J-1 are based on an ambient temperature of 30°C.

**Table J-1**
**AMPACITIES OF FLEXIBLE CORDS**

| Conductor Size, AWG | Number of Current-Carrying Conductor in Cord 2 | 3 | 4 to 6 | 7 |
|---|---|---|---|---|
| 18 | 10 | 7 | 6 | 5 |
| 16 | 13 | 10 | 8 | 7 |
| 14 | 18 | 15 | 12 | 10 |
| 12 | 25 | 20 | 16 | 14 |
| 10 | 30 | 25 | 20 | 17 |

When cords are used with one or more layers wound on a reel, the ampacities shall be corrected as shown in Table J-2:

**Table J-2**
**CORRECTION FACTORS FOR FLEXIBLE CORD AMPACITIES**

| Number of Layers | Multiplying Correction Factor |
|---|---|
| 1 | 0.85 |
| 2 | 0.65 |
| 3 | 0.45 |
| 4 | 0.35 |

## J2.1 NATIONAL ELECTRICAL CODE TYPE DESIGNATIONS AND MAXIMUM VOLTAGE RATINGS OF MULTIPLE-CONDUCTOR FLEXIBLE CORDS

NEC type designations and voltage ratings are shown in Table J-3.

## J3.1 REMOTE CONTROL AND DRILL CORDS

Remote control and drill cords intended for use in underground mines in accordance with The Code of Federal Regulations Title 30, Part 18 shall comply with the constructions given in J2.1 in sizes 14 to 10 AWG, except for the jackets and number of conductors. The jackets shall be applied in two layers with a reinforcement between them. The jackets shall be approximately 50 mils thicker than those listed for sizes 14, 12, and 10 AWG NEC types SO and STO as listed in J.2. The cords shall comply with the flame resistance requirements of The Code of Federal Regulations Title 30, Part 18. The outside diameter shall be in accordance with Table J-4.

**Table J-3**
**NEC TYPE DESIGNATIONS AND VOLTAGE RATINGS OF MULTIPLE-CONDUCTOR FLEXIBLE CORDS**

| Conductor Size, AWG | Insulation Thickness, inch | Jacket Thickness 2, 3, and 4 Conductors, inch | NEC Type Designations | | Maximum Voltage Ratings, Volts |
|---|---|---|---|---|---|
| 18 | .030 | .030 | SJ, SJT | SJO, SJTO | 300 |
| 18 | .030 | .060 | S, ST | SO, STO | 600 |
| 16 | .030 | .060 | SJ, ST | SO, STO | 600 |
| 16 | .030 | .030 | SJ, SJT | SJO, SJTO | 300 |
| 14 | .030 | .030 | SJ, ST | SJO, SJTO | 300 |
| 14 | .045 | .080 | S, ST | SO, STO | 600 |
| 12 | .045 | .095 | S, ST | SO, STO | 600 |
| 10 | .045 | .095 | S, ST | SO, STO | 600 |

*S and SO designate extra hard service cords, SJ and SJO designate hard service cords. T designates a thermoplastic (polyvinyl chloride) jacket O designates an oil-resistant jacket.

Copyright National Electrical Manufacturers Association
Provided by IHS under license with NEMA
No reproduction or networking permitted without license from IHS
Not for Resale

**Table J-4**
**OUTSIDE CONDUCTOR DIAMETERS**

| Conductor Size, AWG | Number of Conductors | Outside Diameter, Nominal inches | Outside Diameter, Tolerances, Plus and Minus |
|---|---|---|---|
| 14 | 2 | 0.64 | 0.02 |
| | 3 | 0.67 | 0.02 |
| | 4 | 0.71 | 0.02 |
| | 5 | 0.78 | 0.03 |
| | 6 | 0.83 | 0.03 |
| | 7 | 0.89 | 0.03 |
| 12 | 2 | 0.68 | 0.02 |
| | 3 | 0.72 | 0.03 |
| | 4 | 0.76 | 0.03 |
| | 5 | 0.83 | 0.03 |
| | 6 | 0.89 | 0.03 |
| | 7 | 0.98 | 0.03 |
| 10 | 2 | 0.73 | 0.03 |
| | 3 | 0.80 | 0.03 |
| | 4 | 0.84 | 0.03 |
| | 5 | 0.90 | 0.03 |
| | 6 | 1.00 | 0.03 |
| | 7 | 1.07 | 0.03 |

Copyright National Electrical Manufacturers Association
Provided by IHS under license with NEMA
No reproduction or networking permitted without license from IHS

Not for Resale

# APPENDIX K
# ADDITIONAL CONDUCTOR INFORMATION

## Table K-1
## CONCENTRIC STRANDED CLASS B, C, AND D ALUMINUM AND COPPER CONDUCTORS

| | Class B | | Class C | | Class D | | Approximate Weight | |
|---|---|---|---|---|---|---|---|---|
| Conductor Size, AWG or kcmil | Number of Strands | Approximate Diameter of Each Strand, inch | Number of Strands | Approximate Diameter of Each Strand, inch | Number of Strands | Approximate Diameter of Each Strand, inch | Aluminum Pounds per 1000 Feet | Copper Pounds per 1000 Feet |
| 12 | 7 | .0305 | 19 | .0185 | 37 | .0133 | 6.13 | 20.16 |
| 11 | 7 | .0343 | 19 | .0208 | 37 | .0149 | 7.72 | 25.49 |
| 10 | 7 | .0385 | 19 | .0234 | 37 | .0167 | 9.75 | 32.06 |
| 9 | 7 | .0432 | 19 | .0262 | 37 | .0188 | 12.3 | 40.42 |
| 8 | 7 | .0486 | 19 | .0295 | 37 | .0211 | 15.5 | 51.0 |
| 7 | 7 | .0545 | 19 | .0331 | 37 | .0237 | 19.5 | 64.2 |
| 6 | 7 | .0612 | 19 | .0372 | 37 | .0266 | 24.6 | 80.9 |
| 5 | 7 | .0688 | 19 | .0417 | 37 | .0299 | 31.1 | 102 |
| 4 | 7 | .0772 | 19 | .0469 | 37 | .0336 | 39.2 | 129 |
| 3 | 7 | .0867 | 19 | .0526 | 37 | .0377 | 49.4 | 162 |
| 2 | 7 | .0974 | 19 | .0591 | 37 | .0424 | 62.3 | 205 |
| 1 | 19 | .0664 | 37 | .0476 | 61 | .0370 | 78.6 | 259 |
| 1/0 | 19 | .0745 | 37 | .0534 | 61 | .0416 | 99.1 | 326 |
| 2/0 | 19 | .0837 | 37 | .0600 | 61 | .0467 | 125 | 411 |
| 3/0 | 19 | .0940 | 37 | .0673 | 61 | .0524 | 157 | 518 |
| 4/0 | 19 | .1055 | 37 | .0756 | 61 | .0589 | 199 | 653 |
| 250 | 37 | .0822 | 61 | .0640 | 91 | 0524 | 235 | 772 |
| 300 | 37 | .0900 | 61 | .0701 | 91 | .0574 | 282 | 925 |
| 350 | 37 | .0973 | 61 | .0757 | 91 | .0620 | 329 | 1080 |
| 400 | 37 | .1040 | 61 | .0810 | 91 | .0663 | 376 | 1236 |
| 450 | 37 | .1103 | 61 | .0859 | 91 | .0703 | 422 | 1390 |
| 500 | 37 | .1162 | 61 | .0905 | 91 | .0741 | 469 | 1542 |
| 550 | 61 | .0950 | 91 | .0777 | 127 | 0658 | 517 | 1700 |
| 600 | 61 | .0992 | 91 | .0812 | 127 | .0687 | 563 | 1850 |
| 650 | 61 | .1032 | 91 | .0845 | 127 | .0715 | 610 | 2006 |
| 700 | 61 | .1071 | 91 | .0877 | 127 | .0741 | 657 | 2160 |
| 750 | 61 | .1109 | 91 | .0908 | 127 | .0768 | 704 | 2316 |
| 800 | 61 | .1145 | 91 | .0938 | 127 | .0794 | 751 | 2469 |
| 900 | 61 | .1215 | 91 | .0994 | 127 | .0842 | 845 | 2780 |
| 1000 | 61 | .1280 | 91 | .1048 | 127 | .0887 | 939 | 3086 |

Copyright National Electrical Manufacturers Association
Provided by IHS under license with NEMA
No reproduction or networking permitted without license from IHS

Not for Resale

## Table K-2
## ROPE-LAY ALUMINUM AND COPPER CONDUCTORS, CLASS G

| Conductor Size, AWG or kcmil | Number of Strands | Suggested Construction | Approximate Diameter of Each Strand, inch | Approximate Outside Diameter, inches | Approximaate Weight | |
|---|---|---|---|---|---|---|
| | | | | | Aluminum Pounds per 1000 Feet | Copper Pounds per 1000 Feet |
| 14 | 49 | 7 x 7 | .0092 | 0.083 | ... | 12.8 |
| 12 | 49 | 7 x 7 | .0116 | 0.104 | ... | 20.3 |
| 10 | 49 | 7 x 7 | .0146 | 0.131 | ... | 32.3 |
| 9 | 49 | 7 x 7 | .0164 | 0.148 | ... | 40.8 |
| 8 | 49 | 7 x 7 | .0184 | 0.166 | ... | 51 |
| 7 | 49 | 7 x 7 | .0206 | 0.185 | 20 | 65 |
| 6 | 49 | 7 x 7 | .0231 | 0.208 | 25 | 82 |
| 5 | 49 | 7 x 7 | .0260 | 0.234 | 31 | 103 |
| 4 | 49 | 7 x 7 | .0292 | 0.263 | 40 | 130 |
| 3 | 49 | 7 x 7 | .0328 | 0.295 | 50 | 164 |
| 2 | 49 | 7 x 7 | .0368 | 0.331 | 63 | 207 |
| 1 | 133 | 19 x 7 | .0251 | 0.377 | 80 | 264 |
| 1/0 | 133 | 19 x 7 | .0282 | 0.423 | 102 | 334 |
| 2/0 | 133 | 19 x 7 | .0316 | 0.474 | 127 | 419 |
| 3/0 | 133 | 19 x 7 | .0355 | 0.533 | 161 | 529 |
| 4/0 | 133 | 19 x 7 | .0399 | 0.599 | 203 | 668 |
| 250 | 259 | 37 x 7 | .0311 | 0.653 | 242 | 795 |
| 300 | 259 | 37 x 7 | .0340 | 0.714 | 287 | 945 |
| 350 | 259 | 37 x 7 | .0368 | 0.773 | 337 | 1110 |
| 400 | 259 | 37 x 7 | .0393 | 0.825 | 385 | 1265 |
| 450 | 259 | 37 x 7 | .0417 | 0.876 | 433 | 1425 |
| 500 | 259 | 37 x 7 | .0439 | 0.922 | 482 | 1585 |
| 550 | 427 | 61 x 7 | .0359 | 0.969 | 532 | 1750 |
| 600 | 427 | 61 x 7 | .0375 | 1.013 | 581 | 1910 |
| 650 | 427 | 61 x 7 | .0390 | 1.053 | 629 | 2070 |
| 700 | 427 | 61 x 7 | .0405 | 1.094 | 678 | 2230 |
| 750 | 427 | 61 x 7 | .0419 | 1.131 | 725 | 2385 |
| 800 | 427 | 61 x 7 | .0433 | 1.169 | 774 | 2545 |
| 900 | 427 | 61 x 7 | .0459 | 1.239 | 869 | 2860 |
| 1000 | 427 | 61 x 7 | .0484 | 1.307 | 967 | 3180 |
| 1100 | 427 | 61 x 7 | .0508 | 1.372 | 1064 | 3500 |
| 1200 | 427 | 61 x 7 | .0530 | 1.431 | 1158 | 3810 |
| 1250 | 427 | 61 x 7 | .0541 | 1.461 | 1208 | 3975 |
| 1300 | 427 | 61 x 7 | .0552 | 1.490 | 1257 | 4135 |
| 1400 | 427 | 61 x 7 | .0573 | 1.547 | 1356 | 4460 |
| 1500 | 427 | 61 x 7 | .0593 | 1.601 | 1452 | 4775 |
| 1600 | 703 | 37 x 19 | .0477 | 1.670 | 1560 | 5130 |
| 1700 | 703 | 37 x 19 | .0492 | 1.722 | 1660 | 5460 |
| 1750 | 703 | 37 x 19 | .0499 | 1.747 | 1709 | 5620 |
| 1800 | 703 | 37 x 19 | .0506 | 1.771 | 1756 | 5775 |
| 1900 | 703 | 37 x 19 | .0520 | 1.820 | 1854 | 6100 |
| 2000 | 703 | 37 x 19 | .0533 | 1.866 | 1950 | 6415 |

NOTE: Rope-lay aluminum Class G conductors are not recommended in sizes 8 AWG and smaller and individual aluminum wires in stranded conductors should not be smaller than 24 AWG.

Copyright National Electrical Manufacturers Association
Provided by IHS under license with NEMA
No reproduction or networking permitted without license from IHS

Not for Resale

## Table K-3
## ROPE-LAY ALUMINUM AND COPPER CONDUCTORS, CLASS H

| Conductor Size, AWG or kcmil | Number of Strands | Suggested Construction | Approximate Diameter of Each Strand, inch | Approximate Outside Diameter, inches | Approximate Weight | |
|---|---|---|---|---|---|---|
| | | | | | Aluminum Pounds per 1000 Feet | Copper Pounds per 1000 Feet |
| 8 | 133 | 19x7 | .0111 | 0.167 | ... | 52 |
| 7 | 133 | 19x7 | .0125 | 0.188 | ... | 65 |
| 6 | 133 | 19x7 | .0140 | 0.210 | ... | 82 |
| 5 | 133 | 19x7 | .0158 | 0.237 | ... | 105 |
| 4 | 133 | 19x7 | .0177 | 0.266 | ... | 131 |
| 3 | 133 | 19x7 | .0199 | 0.299 | ... | 167 |
| 2 | 133 | 19x7 | .0223 | 0.355 | 63 | 208 |
| 2 | 259 | 37x7 | .0160 | 0.336 | ... | 210 |
| 1 | 259 | 37x7 | .0180 | 0.378 | ... | 266 |
| 1/0 | 259 | 37x7 | .0202 | 0.424 | 102 | 334 |
| 2/0 | 259 | 37x7 | .0227 | 0.477 | 128 | 422 |
| 3/0 | 259 | 37x7 | .0255 | 0.536 | 162 | 533 |
| 3/0 | 427 | 61x7 | .0198 | 0.535 | ... | 532 |
| 4/0 | 259 | 37x7 | .0286 | 0.601 | 204 | 670 |
| 4/0 | 427 | 61x7 | .0223 | 0.602 | 205 | 675 |
| 250 | 427 | 61x7 | .0242 | 0.653 | 242 | 795 |
| 300 | 427 | 61x7 | .0265 | 0.716 | 290 | 953 |
| 350 | 427 | 61x7 | .0286 | 0.772 | 337 | 1110 |
| 400 | 427 | 61x7 | .0306 | 0.826 | 386 | 1270 |
| 450 | 427 | 61x7 | .0325 | 0.878 | 436 | 1435 |
| 500 | 427 | 61x7 | .0342 | 0.923 | 483 | 1590 |
| 550 | 703 | 37x19 | .0280 | 0.980 | 538 | 1770 |
| 600 | 703 | 37x19 | .0292 | 1.022 | 584 | 1920 |
| 650 | 703 | 37x19 | .0304 | 1.064 | 634 | 2085 |
| 700 | 703 | 37x19 | .0316 | 1.106 | 686 | 2255 |
| 750 | 703 | 37x19 | .0327 | 1.145 | 733 | 2410 |
| 800 | 703 | 37x19 | .0337 | 1.180 | 778 | 2560 |
| 900 | 703 | 37x19 | .0358 | 1.253 | 880 | 2895 |
| 1000 | 703 | 37x19 | .0377 | 1.320 | 974 | 3205 |
| 1100 | 703 | 37x19 | .0396 | 1.386 | 1075 | 3535 |
| 1200 | 703 | 37x19 | .0413 | 1.446 | 1169 | 3845 |
| 1250 | 703 | 37x19 | .0422 | 1.477 | 1221 | 4015 |
| 1300 | 703 | 37x19 | .0430 | 1.505 | 1268 | 4170 |
| 1400 | 703 | 37x19 | .0446 | 1.561 | 1363 | 4485 |
| 1500 | 703 | 37x19 | .0462 | 1.617 | 1464 | 4815 |
| 1600 | 1159 | 61x19 | .0372 | 1.674 | 1564 | 5145 |
| 1700 | 1159 | 61x19 | .0383 | 1.724 | 1658 | 5455 |
| 1750 | 1159 | 61x19 | .0389 | 1.751 | 1710 | 5625 |
| 1800 | 1159 | 61x19 | .0394 | 1.773 | 1754 | 5770 |
| 1900 | 1159 | 61x19 | .0405 | 1.823 | 1854 | 6100 |
| 2000 | 1159 | 61x19 | .0415 | 1.868 | 1946 | 6400 |

NOTE: Individual aluminum wires in stranded conductors shall not be smaller than 24 AWG.

Copyright National Electrical Manufacturers Association
Provided by IHS under license with NEMA
No reproduction or networking permitted without license from IHS

Not for Resale

## Table K-4
## ALUMINUM AND COPPER CONDUCTORS, CLASS I
## EACH INDIVIDUAL STRAND 24 AWG, 0.021 INCH

| Conductor Size, AWG or kcmil | Suggested Construction | Approximate Number of Strands | Approximate Outside Diameter, inches | Approximate Weight | |
|---|---|---|---|---|---|
| | | | | Aluminum Pounds per 1000 Feet | Copper Pounds per 1000 Feet |
| 10 | 1x26 | 26 | 0.125 | ... | 32.5 |
| 9 | 1x33 | 33 | 0.138 | ... | 41 |
| 8 | 1x41 | 41 | 0.156 | 16 | 51 |
| 7 | 1x52 | 52 | 0.185 | 20 | 65 |
| 6 | 7x9 | 63 | 0.207 | 24 | 80 |
| 5 | 7x12 | 84 | 0.235 | 32 | 105 |
| 4 | 7x15 | 105 | 0.263 | 41 | 134 |
| 3 | 7x19 | 133 | 0.291 | 51 | 169 |
| 2 | 7x23 | 161 | 0.319 | 62 | 205 |
| 1 | 7x30 | 210 | 0.367 | 81 | 267 |
| 1/0 | 19x14 | 266 | 0.441 | 104 | 342 |
| 2/0 | 19x18 | 342 | 0.500 | 133 | 439 |
| 3/0 | 19x22 | 418 | 0.549 | 163 | 537 |
| 4/0 | 19x28 | 532 | 0.613 | 208 | 683 |
| 250 | 7x7x13 | 637 | 0.682 | 251 | 825 |
| 300 | 7x7x15 | 735 | 0.737 | 290 | 955 |
| 350 | 7x7x18 | 882 | 0.800 | 348 | 1145 |
| 400 | 7x7x20 | 980 | 0.831 | 386 | 1270 |
| 450 | 7x7x23 | 1127 | 0.894 | 444 | 1460 |
| 500 | 7x7x25 | 1225 | 0.941 | 483 | 1590 |
| 550 | 7x7x28 | 1372 | 0.980 | 541 | 1780 |
| 600 | 7x7x30 | 1470 | 1.027 | 579 | 1905 |
| 650 | 19x7x12 | 1596 | 1.152 | 635 | 2090 |
| 700 | 19x7x13 | 1729 | 1.194 | 687 | 2260 |
| 750 | 19x7x14 | 1862 | 1.235 | 740 | 2435 |
| 800 | 19x7x15 | 1995 | 1.290 | 793 | 2610 |
| 900 | 19x7x17 | 2261 | 1.372 | 901 | 2965 |
| 1000 | 19x7x19 | 2527 | 1.427 | 1005 | 3305 |
| 1100 | 19x7x21 | 2793 | 1.495 | 1111 | 3655 |
| 1200 | 19x7x22 | 2926 | 1.537 | 1164 | 3830 |
| 1250 | 19x7x23 | 3059 | 1.564 | 1216 | 4000 |
| 1300 | 19x7x24 | 3192 | 1.605 | 1269 | 4175 |
| 1400 | 19x7x26 | 3458 | 1.674 | 1386 | 4560 |
| 1500 | 19x7x28 | 3724 | 1.715 | 1482 | 4875 |
| 1600 | 19x7x30 | 3990 | 1.797 | 1587 | 5220 |
| 1700 | 19x7x32 | 4256 | 1.852 | 1693 | 5570 |
| 1750 | 19x7x33 | 4389 | 1.880 | 1746 | 5745 |
| 1800 | 19x7x34 | 4522 | 1.921 | 1800 | 5920 |
| 1900 | 19x7x36 | 4788 | 1.976 | 1905 | 6265 |
| 2000 | 19x7x37 | 4921 | 2.003 | 1958 | 6440 |

NOTE: Aluminum Class I conductors are not recommended in sizes 8 AWG and smaller.

Copyright National Electrical Manufacturers Association
Provided by IHS under license with NEMA
No reproduction or networking permitted without license from IHS

Not for Resale

## Table K-5
## COPPER CONDUCTORS, CLASS K
## EACH INDIVIDUAL STRAND 30 AWG, 0.0100 INCH

| Conductor Size, AWG or kcmil | Suggested Construction | Approximate Number of Strands | Approximate Outside Diameter, Inches | Approximate Weight, Pounds per 1000 Feet |
|---|---|---|---|---|
| 12 | 1x65 | 65 | 0.101 | 20.3 |
| 10 | 1x104 | 104 | 0.126 | 32.5 |
| 9 | 7x19 | 133 | 0.150 | 42 |
| 8 | 7x24 | 168 | 0.157 | 53 |
| 7 | 7x30 | 210 | 0.179 | 66 |
| 6 | 7x38 | 266 | 0.210 | 84 |
| 5 | 7x48 | 336 | 0.235 | 106 |
| 4 | 7x60 | 420 | 0.272 | 132 |
| 3 | 19x28 | 532 | 0.304 | 169 |
| 2 | 19x35 | 665 | 0.338 | 211 |
| 1 | 19x44 | 836 | 0.397 | 266 |
| 1/0 | 19x56 | 1064 | 0.451 | 338 |
| 2/0 | 7x7x27 | 1323 | 0.470 | 425 |
| 3/0 | 7x7x34 | 1666 | 0.533 | 535 |
| 4/0 | 7x7x43 | 2107 | 0.627 | 676 |
| 250 | 7x7x51 | 2499 | 0.682 | 802 |
| 300 | 7x7x61 | 2989 | 0.768 | 960 |
| 350 | 19x7x26 | 3458 | 0.809 | 1120 |
| 400 | 19x7x30 | 3990 | 0.878 | 1290 |
| 450 | 19x7x34 | 4522 | 0.933 | 1465 |
| 500 | 19x7x38 | 5054 | 0.988 | 1635 |
| 550 | 19x7x41 | 5453 | 1.056 | 1765 |
| 600 | 19x7x45 | 5985 | 1.125 | 1940 |
| 650 | 19x7x49 | 6517 | 1.166 | 2110 |
| 700 | 19x7x52 | 6916 | 1.207 | 2240 |
| 750 | 19x7x57 | 7581 | 1.276 | 2455 |
| 800 | 19x7x60 | 7980 | 1.305 | 2585 |
| 900 | 37x7x35 | 9065 | 1.323 | 2935 |
| 1000 | 37x7x39 | 10101 | 1.419 | 3270 |

Copyright National Electrical Manufacturers Association
Provided by IHS under license with NEMA
No reproduction or networking permitted without license from IHS

Not for Resale

## Table K-6
## COPPER CONDUCTORS, CLASS M
## EACH INDIVIDUAL STRAND 34 AWG, 0.0063 INCH

| Conductor Size, AWG or kcmil | Suggested Construction | Approximate Number of Strands | Approximate Outside Diameter, Inches | Approximate Weight, Pounds per 1000 Feet |
|---|---|---|---|---|
| 12 | 7x24 | 168 | 0.101 | 21.0 |
| 10 | 7x37 | 259 | 0.126 | 32.5 |
| 9 | 7x48 | 336 | 0.146 | 42 |
| 8 | 7x60 | 420 | 0.162 | 53 |
| 7 | 19x28 | 532 | 0.196 | 67 |
| 6 | 19x35 | 665 | 0.215 | 84 |
| 5 | 19x44 | 836 | 0.240 | 105 |
| 4 | 19x56 | 1064 | 0.269 | 134 |
| 3 | 7x7x27 | 1323 | 0.305 | 169 |
| 2 | 7x7x34 | 1666 | 0.337 | 212 |
| 1 | 7x7x43 | 2107 | 0.376 | 268 |
| 1/0 | 7x7x54 | 2646 | 0.423 | 337 |
| 2/0 | 19x7x25 | 3325 | 0.508 | 427 |
| 3/0 | 19x7x32 | 4256 | 0.576 | 547 |
| 4/0 | 19x7x40 | 5320 | 0.645 | 684 |
| 250 | 19x7x48 | 6384 | 0.713 | 821 |
| 300 | 19x7x57 | 7581 | 0.768 | 975 |
| 350 | 37x7x34 | 8806 | 0.825 | 1130 |
| 400 | 37x7x39 | 10101 | 0.901 | 1300 |
| 450 | 37x7x44 | 11396 | 0.940 | 1465 |
| 500 | 37x7x49 | 12691 | 0.997 | 1630 |
| 550 | 61x7x32 | 13664 | 1.035 | 1755 |
| 600 | 61x7x35 | 14945 | 1.084 | 1920 |
| 650 | 61x7x38 | 16226 | 1.133 | 2085 |
| 700 | 61x7x41 | 17507 | 1.183 | 2250 |
| 750 | 61x7x44 | 18788 | 1.207 | 2415 |
| 800 | 61x7x47 | 20069 | 1.256 | 2580 |
| 900 | 61x7x53 | 22631 | 1.331 | 2910 |
| 1000 | 61x7x59 | 25193 | 1.404 | 3240 |

Copyright National Electrical Manufacturers Association
Provided by IHS under license with NEMA
No reproduction or networking permitted without license from IHS

Not for Resale

# NEMA STANDARDIZATION BACKGROUND

The purpose of NEMA Standards, their classification, and status are set forth in certain clauses of the NEMA *Standardization Policies and Procedures* manual and are referenced below:

## Purpose of Standards

National Electrical Manufacturers Association Standards are adopted in the public interest and are designed to eliminate misunderstandings between the manufacturer and the purchaser and to assist the purchaser in selecting and obtaining the proper product for their particular needs. Existence of a National Electrical Manufacturers Association Standard does not in any respect preclude any member or nonmember from manufacturing or selling products not conforming to the standard.

*(Standardization Policies and Procedures, p. 1)*

## Definition of a Standard

A Standard of the National Electrical Manufacturers Association defines a product, process or procedure with reference to one or more of the following: nomenclature, composition, dimensions, tolerances, safety, operating characteristics, performance, rating, testing, and the service for which they are designed.

*(Standardization Policies and Procedures, p. 2)*

## Dimensions

Where dimensions are given for interchangeability purposes, alternate dimensions satisfying the other provisions of the Standards Publication may be capable of otherwise equivalent performance.

*(Standardization Policies and Procedures, p. 8)*

## Categories of Standards

National Electrical Manufacturers Association Standards are of three classes, which have received the affirmative vote of at least two-thirds of the Subdivision votes cast in the affirmative or negative:

1. NEMA Standard, which relates to a product, process, or procedure commercially standardized and subject to repetitive manufacture.
2. Suggested Standard for Future Design, which may not have been regularly applied to a commercial product, but which suggests a sound engineering approach to future development.
3. Adoptive Standard, which is adopted in whole or in part from the standards of another organization, either domestic, regional, or international.

*(Standardization Policies and Procedures, pp. 7 & 16)*

## Authorized Engineering Information

Authorized Engineering Information consists of explanatory data and other engineering information of an informative character not falling within the classification of NEMA Standard or Suggested Standard for Future Design, which standard has received the affirmative vote of at least two-thirds of the Subdivision votes cast in the affirmative or negative.

*(Standardization Policies and Procedures, pp. 7 & 16)*

## Identification of Status

Standards in NEMA Standards Publications are identified as "NEMA Standard," "Suggested Standard for Future Design," or "Adoptive Standard." These indicate the status of the standard. A statement incorporating the auxiliary verb "shall" indicates that compliance with a requirement is mandatory for compliance with the standard. These classes of standards are identified in the foreword or throughout the text.

The material identified as "Authorized Engineering Information" is designated similarly. Statements incorporating other auxiliary verbs such as "should," "may," etc. refer to authorized engineering information and not to procedures required for compliance with the standard.

Copyright National Electrical Manufacturers Association
Provided by IHS under license with NEMA
No reproduction or networking permitted without license from IHS
Not for Resale

# POWER AND CONTROL CABLE SECTION
# OF THE
# NATIONAL ELECTRICAL MANUFACTURERS ASSOCIATION

## MEMBER COMPANIES

Alcan Cable
Atlanta, GA 30346

Alcatel Chester Cable Corp.
Chester, NY 10918

Amercable
Division of Associated Materials
El Dorado, AR 71730

BICC Cables Corporation
West Nyack, NY 10994

Cablec Continental Cables Co.
York, PA 17402

Carol Cable Company
Highland Heights, KY 41076

Furon Company
Dekoron Division
Aurora, OH 44202

The Kerite Company
Subsidiary of Hubbell, Inc.
Seymour, CT 06483

The Okonite Company
Ramsey, NJ 07446

Pirelli Cable Corporation
Florham Park, NJ 07932

The Rockbestos Company
New Haven, CT 06504

Rome Cable Corporation
Rome, NY 13440

Royal Electric/Triangle
Pawtucket, RI 02862

Southwire Company
Carrollton, GA 30119

Triangle Wire & Cable, Inc.
Lincoln, RI 02865

Copyright National Electrical Manufacturers Association
Provided by IHS under license with NEMA
No reproduction or networking permitted without license from IHS
Not for Resale