6470247 0522158 209

NEMA-WC56

ADOPTION NOTICE

NEMA-WC56, "3.0 kHz Insulation Continuity Proof Testing of Wire and Cable", was adopted on 11-AUG-00 for use by the Department of Defense (DoD). Proposed changes by DoD activities must be submitted to the DoD Adopting Activity: Defense Supply Center Columbus, P.O. Box 3990, Attn: DSCC-VAI, Columbus, OH 43216-5000. DoD activities may obtain copies of this standard from the Standardization Document Order Desk, 700 Robbins Avenue, Building 4D, Philadelphia, PA 19111-5094. The private sector and other Government agencies may purchase copies from the National Electrical Manufacturers Association, 1300 North 17th Street, Suite 1847, Rosslyn, VA 22209.

Custodians:
Navy - SH
Air Force - 11
DLA - CC

Adopting Activities:
DLA - CC
(Project 6145-2257)

Reviewer Activities:
Navy - AS

FSC 6145

DISTRIBUTION STATEMENT A: Approved for public release; distribution is unlimited.

Copyright National Electrical Manufacturers Association
Provided by IHS under license with NEMA
No reproduction or networking permitted without license from IHS
Not for Resale

NEMA STANDARDS PUBLICATION NO. WC 56

nema

3.0 kHz Insulation Continuity Proof Testing of Wire and Cable

NEMA

NATIONAL ELECTRICAL MANUFACTURERS ASSOCIATION ■ 2101 L STREET, N.W., WASHINGTON, D.C. 20037

Copyright National Electrical Manufacturers Association
Provided by IHS under license with NEMA
No reproduction or networking permitted without license from IHS
Not for Resale

NEMA Standards Publication No. WC 56-1986 (R 1993)

3.0 kHz INSULATION CONTINUITY PROOF TESTING OF WIRE AND CABLE

Revision 1, February 15, 1994

Published by

National Electrical Manufacturers Association
2101 L Street, N.W.
Washington, DC 20037

©1994 by National Electrical Manufacturers Association

Copyright National Electrical Manufacturers Association
Provided by IHS under license with NEMA
No reproduction or networking permitted without license from IHS

Not for Resale

Foreword

This Standards Publication has been prepared to delineate the basic requirements for sparktesting apparatus utilizing a 3 kHz nominal frequency. It is intended as a substitute or an alternative to conventional sparktesting at an industrial frequency.

The use of an elevated frequency will allow a reduction in the electrode length while exposing the wire or cable to a suitable number of wave crests.

Performance criteria have been included which will stipulate minimum sensitivities for the equipment. Underwriters Laboratories has recognized 3 kHz sparktest for testing of wire or cable. The NEMA High Performance Wire and Cable Section prepared this test procedure.

Comments or proposed revisions are welcomed and should be submitted to:

Vice-President, Engineering
National Electrical Manufacturers Association
2101 L Street, N.W.
Washington, D.C. 20037

Scope

This standard covers a general procedure for continuous voltage proof testing of wire and cable. It is intended to apply primarily to the final inspection of wire or cable for the purpose of finding and eliminating defects prior to shipment or before use. The method can also be used to eliminate defects at an early stage of manufacturing, i.e., for wire or cable to be used in multiconductor cables or jacketed constructions.

Because of possible damage in handling, damage caused by repeated testings, and variations in test parameters, comparison between producer's and consumer's test results are not significant.

Copyright National Electrical Manufacturers Association
Provided by IHS under license with NEMA
No reproduction or networking permitted without license from IHS

Not for Resale

Section 1
TEST EQUIPMENT

1.1 ELECTRODE

The electrode shall be of a bead chain construction (see Figure 1-1) that will give intimate metallic contact with practically all of the wire insulation surface.

The chain shall be suspended in a U or V-shaped trough having a width approximately 1½ inches (38 mm) greater than the diameter of the larger size of wire that is tested.

The chain shall have a length appreciably greater than the depth of the enclosure so that the beads will droop below the wire under test.

The electrode shall consist of an array of 1/16 inch (1.59 mm) diameter stainless steel bead chains suspended approximately 0.08 inch (2.03 mm) apart, perpendicular to the wire line and spaced approximately 0.10 inch (2.54 mm) apart along the wire line.

1.1.1 Electrode Length

The electrode length shall be chosen so that, at the speed being used, the wire shall be subjected to no less than a total of six positive and negative crests of the supply voltage (the equivalent of three complete cycles nor more than 1200 positive or negative wave crests (600 complete cycles) at any given cross section.

1.1.2 Use of Electrode

Only one electrode shall be connected to the power supply transformer.

The electrode shall be kept free of water and foreign matter; it shall be provided with an earth grounded metal screen or an equivalent guard to provide protection for the operating personnel.

Broken chains shall be replaced as required.

1.2 VOLTAGE SHAPE

The applied voltage shall be essentially sinusoidal. The crest factor of the voltage shall be no less than 1.35 nor more than 1.48 under any load condition (see 2.3).

1.3 VOLTAGE FREQUENCY

The frequency shall be 2.5 ± 1.0 kHz under any load condition.

The most desirable frequency range is 3 ± 0.5 kHz. There are wire and cable constructions which will cause the frequency to drop below 2.5 kHz. Under no conditions shall the frequency be allowed to go below 1.5 kHz. Line speeds should be adjusted at low frequencies. Use 2.1.3.1 to calculate the speed.

If equipment with multiple load or frequency settings is used, it shall contain a frequency meter or tripping device which will render the unit non-operational when the frequency does not fall within the specified range.

1.4 VOLTMETER

The voltmeter measuring the rms voltage shall be capable of operating accurately up to 4 kHz, shall be connected directly to the measuring circuit, and shall continually indicate the electrode potential.

The full scale meter reading shall not be greater than 15 kV rms.

The meter accuracy shall be such that, when the voltage is adjusted to any specified value by a calibrating voltmeter, the actual electrode value will be within ±2 percent of full scale.

1.5 REGULATION

The maximum current which the equipment can deliver to a purely capacitive load shall be no less than 40.0 milliamperes. The maximum current which can be delivered to purely resistive load shall be no greater than 4.0 milliamperes. The voltage at the test electrode shall not change more than 5 percent between no load and full load conditions when the load consists of a capacitance passing a current of 10.0 milliamperes in parallel with a resistance passing a current of 1.0 milliampere.

1.6 FAILURE DETECTION CIRCUIT

There shall be a fault indicating circuit which shall give a visible or audible indication of a dielectric failure. The system shall be sufficiently sensitive so that a fault is indicated at any voltage above 2 kV when the electrode is arced to ground through a needle spark gap in series with a test network, for a duration of 1 millisecond (see Figure 1-2).

The spark gap shall consist of a metal plate and a needle point, and the distance between them shall be maintained at .010 inch ± .002 inch (.25 mm ± .05 mm). A suitable type of needle is shown in Figure 1-3, or equivalent. The 50 picofarad (pf) capacitor shall be of the high voltage type (15 kV rms) with polyethylene insulation, or suitable equivalent.

After a fault occurs, the equipment shall come back to full sensitivity and full potential within 40 milliseconds.

Equipment used for proof testing without stopping mechanism shall have a response time such that every segment of the wire will be subjected to the full test potential at full sensitivity and fault registering capability for at least three complete cycles.

Copyright National Electrical Manufacturers Association
Provided by IHS under license with NEMA
No reproduction or networking permitted without license from IHS

Not for Resale

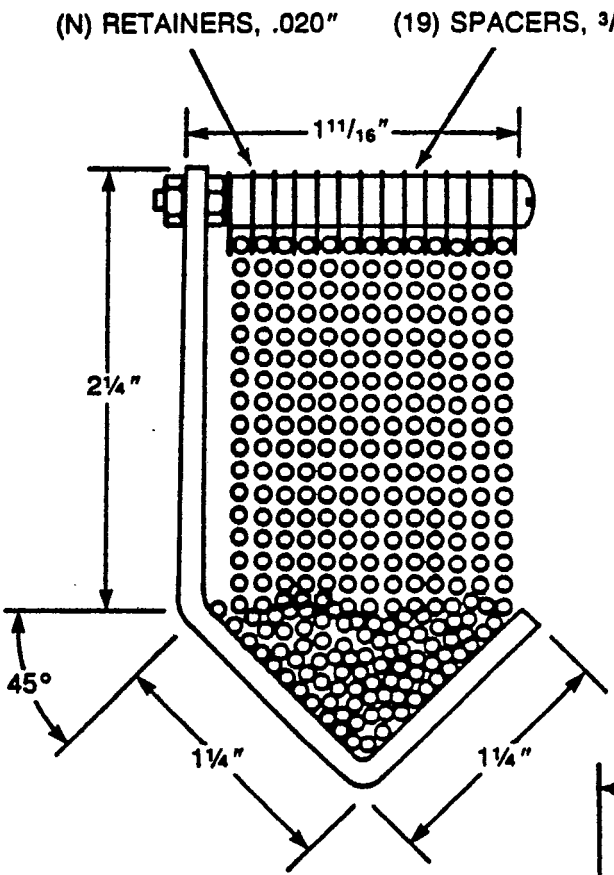

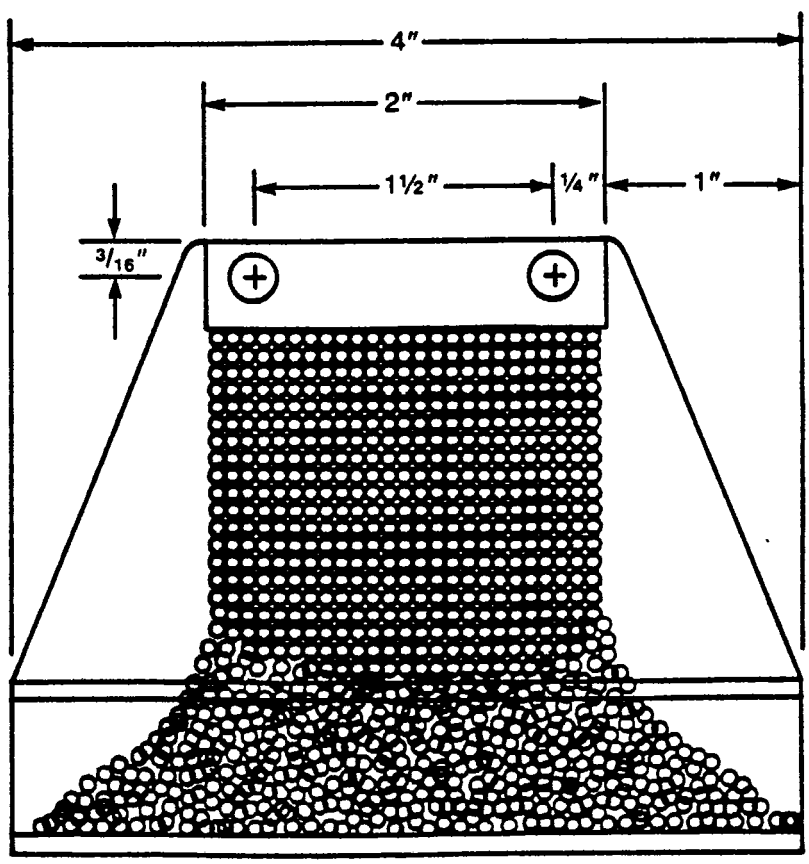

*Note: All dimensions in inches.

Figure 1-1
TYPICAL BEAD CHAIN ARRANGEMENT

Copyright National Electrical Manufacturers Association
Provided by IHS under license with NEMA
No reproduction or networking permitted without license from IHS
Not for Resale

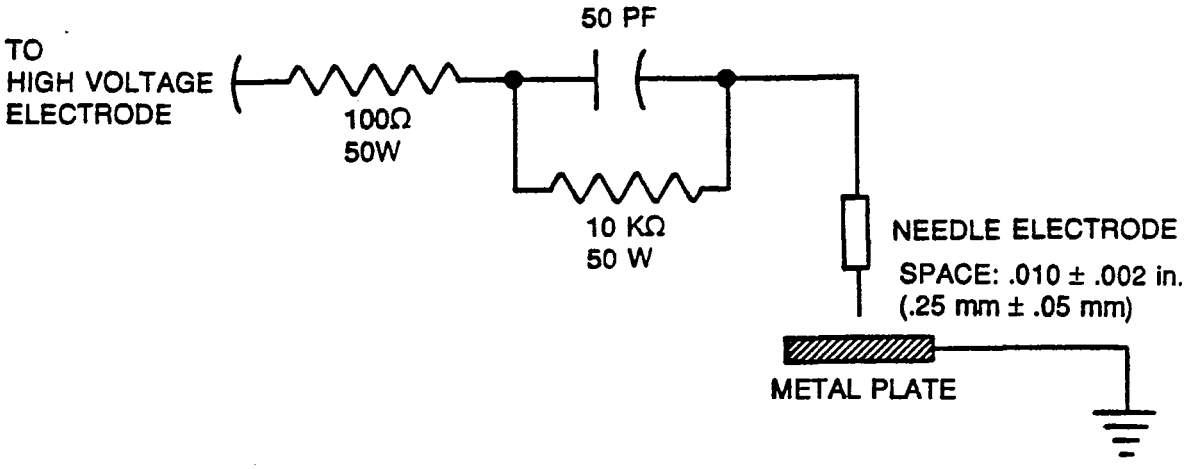

Figure 1-2
TYPICAL ARRANGEMENT FOR SENSITIVITY MEASUREMENT

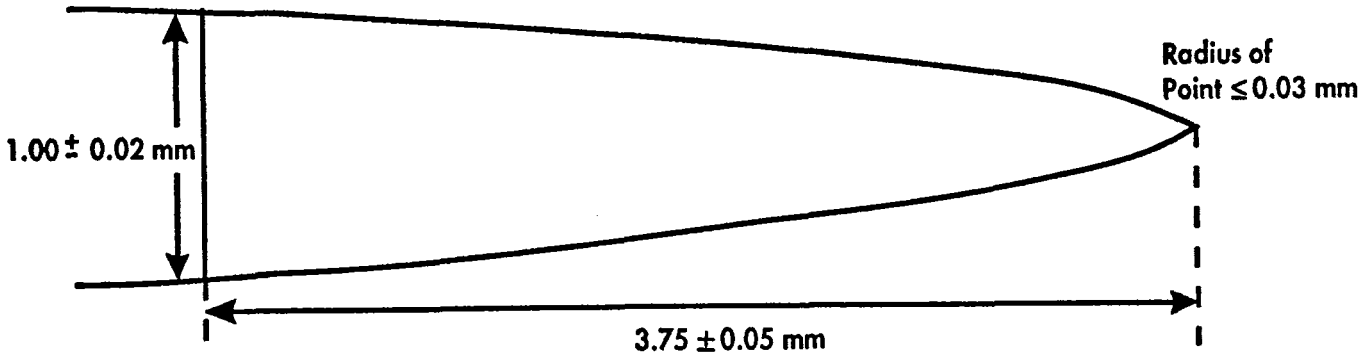

Figure 1-3
SUITABLE NEEDLE POINT

Copyright National Electrical Manufacturers Association
Provided by IHS under license with NEMA
No reproduction or networking permitted without license from IHS
Not for Resale

There shall be no indication of a fault when the electrode is shorted to ground through a 2 megohm resistor at a voltage of 2 kV for a period of 2 seconds.

1.7 SAFETY OF EQUIPMENT AND SAFE USE OF EQUIPMENT

Any equipment built or purchased for performance of this test shall comply with applicable electrical safety codes, and shall be used in accordance with the manufacturer's instructions for safe use.

Copyright National Electrical Manufacturers Association
Provided by IHS under license with NEMA
No reproduction or networking permitted without license from IHS
Not for Resale

Section 2
TEST PROCEDURE

2.1 SET-UP

The insulated wire or cable shall be threaded through the electrode head and the conductor grounded at one or both ends. With the electrode head energized to the specified voltage, the wire shall pass from the payoff spool through the electrode and on to the takeup spool.

2.1.1 Voltage

The voltage shall be adjusted with the wire or cable in the electrode. The equipment shall not be used if any noticeable voltage drop occurs when the wire starts moving through the electrode at any selected speed.

2.1.1.1 MAXIMUM VOLTAGE

Loading of the equipment beyond its power supply capabilities may result in malfunctioning or erroneous indications. The maximum allowable voltage may therefore have to be restricted due to capacitive loads. It may be calculated based on the minimum current necessary to trigger the detection circuit (40 milliamperes per paragraph 1.5) divided by 2π F (where F is frequency) and the capacitance of the wire in the electrode. For purposes of this determination, the maximum allowable frequency of 3.5 kHz should be used, so that maximum voltage is determined as follows:

$$V_{max} = \frac{1.82(10)^6}{C} \quad \text{(Volts)}$$

Where:

V = Volts

C = Capacity in Picofarads (pf)

Modern high performance insulation systems may not require any such determination for the resistive component to calculate the maximum allowable voltage; for lossy dielectrics, however, a maximum allowable voltage should also be calculated for the resistive component of the load current.

2.1.2 Frequency

Equipment with multiple settings shall be adjusted such that the test frequency will be 2.5 ± 1.0 kHz.

2.1.3 Line speed

The rate of speed, as a function of electrode length, shall be controlled by the requirements of 1.1.1.

2.1.3.1 MAXIMUM

The maximum acceptable line speed in feet per minute (fpm) shall be determined as follows:

fpm = 5/3 × Frequency (Hz) × Electrode Length (in), when calculated for the lowest allowable frequency of 1.50 kHz. Therefore $fpm_{(max)}$ - 2500 × Electrode Length (in.).

Similarly, for metric units, line speed in meters per minute shall be determined as follows:

Meters per minute = 1/50 × Frequency (Hz) × Electrode Length (mm).

Therefore:

Meters per $minute_{(max)}$ = 30 × Electrode Length (mm) at 1.50 kHz.

2.1.3.2 MINIMUM

The minimum acceptable line speed shall be determined based on the maximum frequency of 3.50 kHz as follows:

Where Max. frequency = 3.50 kHz, Max. No. of cycles per given area = 600, and for 1inch of electrode length at 3.50 kHz/600 cycles, then $fpm_{(min)}$ = 5.833 inch/second × 60 seconds/minute × 1 foot/12 inches = 29.2 × Electrode Length (in.).

Similarly, for metric units:

Meters per $minute_{(min)}$ = 29.2 feet/minute/inch × .305 meter/foot × .0394 millimeter/1 inch = .35 × Electrode Length (mm).

2.2 FAULT IDENTIFICATION

If any dielectric failures occur, they shall be cut out or suitably identified for subsequent removal, together with at least 2 inches (50.8 mm) of wire on each side of the fault. The equipment shall be wired to automatically de-energize the high voltage when the wire is stopped. During the string-up of a new length, every attempt shall be made to expose the entire length, including ends, to the specified voltage. Any ends not tested shall be clearly marked and removed subsequent to this test.

2.3 CALIBRATION AND CREST FACTOR

The instrument voltmeter and waveform shall be checked for compliance with this standard at 25, 50, 75, and 100 percent of each intended operating voltage scale by means of a calibrated electrostatic voltmeter with peak detecting attachment. The voltmeter without attachment shall be used to measure the rms voltage; the crest voltage shall be measured with the peak detecting attachment and the same electrostatic voltmeter shall be used for measurement of the rms value. The ratio of the crest value to the rms value constitutes the form factor which must fall

Copyright National Electrical Manufacturers Association
Provided by IHS under license with NEMA
No reproduction or networking permitted without license from IHS

Not for Resale

within the limits specified in 1.2, under no load and full load conditions.

2.4 VENTILATION OF WORK AREA

Provisions for ventilation may have to be made when using the equipment described in this standard in a closed room, in order to remove any excess ozone which may be formed during the testing, particularly at higher voltages.

Copyright National Electrical Manufacturers Association
Provided by IHS under license with NEMA
No reproduction or networking permitted without license from IHS

Not for Resale

NEMA STANDARDIZATION BACKGROUND

The purpose of NEMA standards, their classification, and status are set forth in certain clauses of the NEMA *Standardization Policies and Procedures* manual and are referenced below:

Purpose of Standards

National Electrical Manufacturers Association Standards are adopted in the public interest and are designed to eliminate misunderstandings between the manufacturer and the purchaser and to assist the purchaser in selecting and obtaining the proper product for their particular needs. Existence of a National Electrical Manufacturers Association Standard does not in any respect preclude any member or nonmember from manufacturing or selling products not conforming to the standard.

Definition of a Standard

A standard of the National Electrical Manufacturers Association defines a product, process, or procedure with reference to one or more of the following: nomenclature, composition, dimensions, tolerances, safety, operating characteristics, performance, rating, testing, and the service for which they are designed.

(Standardization Policies and Procedures, p. 1)

Dimensions

Where dimensions are given for interchangeability purposes, alternate dimensions satisfying the other provisions of the Standards Publication may be capable of otherwise equivalent performance.

(Standardization Policies and Procedures, p. 6)

Categories of Standards

National Electrical Manufacturers Association Standards are of three classes, which have received the affirmative vote of at least two-thirds of the Subdivision votes cast in the affirmative or negative:

1. NEMA Standard, which relates to a product, process, or procedure commercially standardized and subject to repetitive manufacture.
2. Suggested Standard for Future Design, which may not have been regularly applied to a commercial product, but which suggests a sound engineering approach to future development.
3. Adoptive Standard, which is adopted in whole or in part from the standards of another organization, either domestic, regional, or international.

(Standardization Policies and Procedures, pp. 5)

Authorized Engineering Information

Authorized Engineering Information consists of explanatory data and other engineering information of an informative character not falling within the classification of NEMA Standard or Suggested Standard for Future Design, which standard has received the affirmative vote of at least two-thirds of the Subdivision votes cast in the affirmative or negative.

(Standardization Policies and Procedures, pp. 5)

Identification of Status

Standards in NEMA Standards Publications are identified as "NEMA Standard," "Suggested Standard for Future Design," or "Adoptive Standard." These indicate the status of the standard. A statement incorporating the auxiliary verb "shall" indicates that compliance with a requirement is mandatory for compliance with the standard. These classes of standards are identified in the foreword or throughout the text.

The material identified as "Authorized Engineering Information" is designated similarly. Statements incorporating other auxiliary verbs such as "should," "may," etc. refer to the authorized engineering information and not to procedures required for compliance with the standard.

Copyright National Electrical Manufacturers Association
Provided by IHS under license with NEMA
No reproduction or networking permitted without license from IHS
Not for Resale

HIGH PERFORMANCE WIRE AND CABLE SECTION OF THE NATIONAL ELECTRICAL MANUFACTURERS ASSOCIATION

MEMBER COMPANIES

American Electric Cable Co.
Holyoke, MA

Astro Industries, Inc.
Dayton, OH

AT&T
Norcross, GA

Barcel Wire & Cable Corp.
Irvine, CA

Belden Wire & Cable Co.
Richmond, IN

Berk-Tek, Inc.
New Holland, PA

Brand-Rex Company
Willimantic, CT

Cablec Continental Cables
York, PA

Cable USA, Inc.
Naples, FL

Carol Cable Company, Inc.
Pawtucket, RI

Champlain Cable Corporation
Colchester, VT

Delta Surprenant Wire & Cable
Clinton, MA

Furon Company
Aurora, OH

Harbour Industries, Inc.
Shelburne, VT

Helix/Hitemp Cables, Inc.
Hauppauge, NY

Independent Cabel, Inc.
Hudson, MA

Judd Wire, Inc.
Turner Falls, MA

Kris-Tech Wire Company, Inc.
Rome, NY

Micro-Tek Corporation
Cinnaminson, NJ

Mohawk Wire & Cable Corp.
Leominster, MA

Montrose Products Company
Auburn, MA

North Amercan Cable Corp.
New Haven, CT

The Okonite Company
Ramsey, NJ

Pacific Electricord Company
Gardena, CA

Quirk Wire Company, Inc.
West Brookfield, MA

Radix Wire Company
Euclid, OH

The Rockbestos Company
East Granby, CT

Siecor Corporation
Hickory, NC

Specialty Cable Corporation

Wallingford, CT

Teledyne Thermatics
Elm City, NC

Tensolite Company
St. Augustine, FL

Times Microwave Systems, Inc.
Wallingford, CT

Triangle Wire & Cable, Inc.
Lincoln, RI

Copyright National Electrical Manufacturers Association
Provided by IHS under license with NEMA
No reproduction or networking permitted without license from IHS
Not for Resale