STD.NEMA WC 56-ENGL 1986 ■ 6470247 0524495 703 ■

NEMA STANDARDS PUBLICATION NO. WC 56

nema

3.0 kHz Insulation Continuity Proof Testing of Hook-Up Wire

NEMA

NATIONAL ELECTRICAL MANUFACTURERS ASSOCIATION ■ 2101 L STREET N.W., WASHINGTON, D.C. 20037

Copyright National Electrical Manufacturers Association
Provided by IHS under license with NEMA
No reproduction or networking permitted without license from IHS
Not for Resale

TABLE OF CONTENTS

		Page
	FOREWORD	i
	SCOPE	ii
Section 1	TEST EQUIPMENT	1
	Electrode	1
	Electrode Length	1
	Use of Electrode	1
	Voltage Shape	1
	Voltage Frequency	3
	Voltmeter	3
	Regulation	3
	Failure Detection Circuit	3
	Safety of Equipment and Safe Use of Equipment	3
Section 2	TEST PROCEDURE	4
	Set-Up	4
	Voltage	4
	Maximum Voltage	4
	Frequency	4
	Line Speed	4
	Maximum	4
	Minimum	4
	Fault Identification	5
	Calibration and Form Factor	5
	Ventilation of Work Area	5

Copyright National Electrical Manufacturers Association
Provided by IHS under license with NEMA
No reproduction or networking permitted without license from IHS
Not for Resale

NEMA Standards Publication No. WC 56-1986 (R2000)

3.0 kHz Insulation Continuity Proof Testing of Hook-Up Wire

Published by:

National Electrical Manufacturers Association
1300 North 17th Street, Suite 1847
Rosslyn, VA 22209

© Copyright 2000 by the National Electrical Manufacturers Association and the Insulated Cable Engineers Association, Incorporated (ICEA). All rights including translation into other languages reserved under the Universal Copyright Convention, the Berne Convention for the Protection of Literary and Artistic Works, and the International and Pan American Copyright Conventions.

Copyright National Electrical Manufacturers Association
Provided by IHS under license with NEMA
No reproduction or networking permitted without license from IHS
Not for Resale

STD.NEMA WC 56-ENGL 1986 ■ 6470247 0524498 412 ■

WC 56

3.0 kHz INSULATION CONTINUITY PROOF TESTING OF HOOK-UP WIRE

Published by

National Electrical Manufacturers Association
2101 L Street, N.W.
Washington, D.C. 20037

© 1987 by National Electrical Manufacturers Association

Copyright National Electrical Manufacturers Association
Provided by IHS under license with NEMA
No reproduction or networking permitted without license from IHS

Not for Resale

Foreword

This Standards Publication has been prepared to delineate the basic requirements for sparktesting apparatus utilizing a 3 kHz nominal frequency. It is intended as a substitute or an alternative to conventional sparktesting at an industrial frequency.

The use of an elevated frequency will allow a reduction in the electrode length while exposing the wire to a suitable number of wave crests.

Performance criteria have been included which will stipulate minimum sensitivities for the equipment. Underwriters Laboratories has recognized 3 kHz sparktest for testing of wire. The NEMA High Temperature Insulated Wire and Cable Section and the Electronic Wire and Cable Section prepared this test procedure.

Comments or proposed revisions are welcomed and should be submitted to:

Manager, Engineering Department
National Electrical Manufacturers Association
2101 L Street, N.W.
Washington, D.C. 20037

Copyright National Electrical Manufacturers Association
Provided by IHS under license with NEMA
No reproduction or networking permitted without license from IHS
Not for Resale

Scope

This standard covers a general procedure for continuous voltage proof testing of hook-up wire. It is intended to apply primarily to the final inspection of wire for the purpose of finding and eliminating defects prior to shipment or before use. The method can also be used to eliminate defects at an early stage of manufacturing, i.e., for wire to be used in multiconductor cables or jacketed constructions.

Because of possible damage in handling, damage caused by repeated testings, and variations in test parameters, comparison between producer's and consumer's test results are not significant.

Copyright National Electrical Manufacturers Association
Provided by IHS under license with NEMA
No reproduction or networking permitted without license from IHS
Not for Resale

3.0 kHz INSULATION CONTINUITY PROOF TESTING OF HOOK-UP WIRE

Section 1

TEST EQUIPMENT

1.1 ELECTRODE

The electrode shall be of a bead chain construction (see Figure 1-1) that will give intimate metallic contact with practically all of the wire insulation surface.

The chain shall be suspended in a U or V-shaped trough having a width approximately 1½ inches (40 mm) greater than the diameter of the larger size of wire that is tested.

The chain shall have a length appreciably greater than the depth of the enclosure so that the beads will droop below the wire under test.

The electrode shall consist of an array of 1/16 inch (1.60 mm) diameter stainless steel bead chains suspended approximately 0.08 inch (2.00 mm) apart, perpendicular to the wire line and spaced approximately 0.10 inch (2.50 mm) apart along the wire line.

NEMA Standard 11-20-1986.

1.1.1 Electrode Length

The electrode length shall be chosen so that, at the speed being used, the wire shall be subjected to no less than a total of 6 positive and negative crests of the supply voltage (the equivalent of 3 complete cycles) nor more than 1200 positive or negative wave crests (600 complete cycles) at any given cross section.

NEMA Standard 11-20-1986.

1.1.2 Use of Electrode

Only one electrode shall be connected to the power supply transformer.

The electrode shall be kept free of water and foreign matter; it shall be provided with an earth grounded metal screen or an equivalent guard to provide protection for the operating personnel.

Broken chains shall be replaced as required.

NEMA Standard 11-20-1986.

1.2 VOLTAGE SHAPE

The applied voltage shall be essentially sinusoidal. The form factor of the voltage shall be no less than 1.35 nor more than 1.48 under any load condition (see 2.3).

NEMA Standard 11-20-1986.

Copyright National Electrical Manufacturers Association
Provided by IHS under license with NEMA
No reproduction or networking permitted without license from IHS

Not for Resale

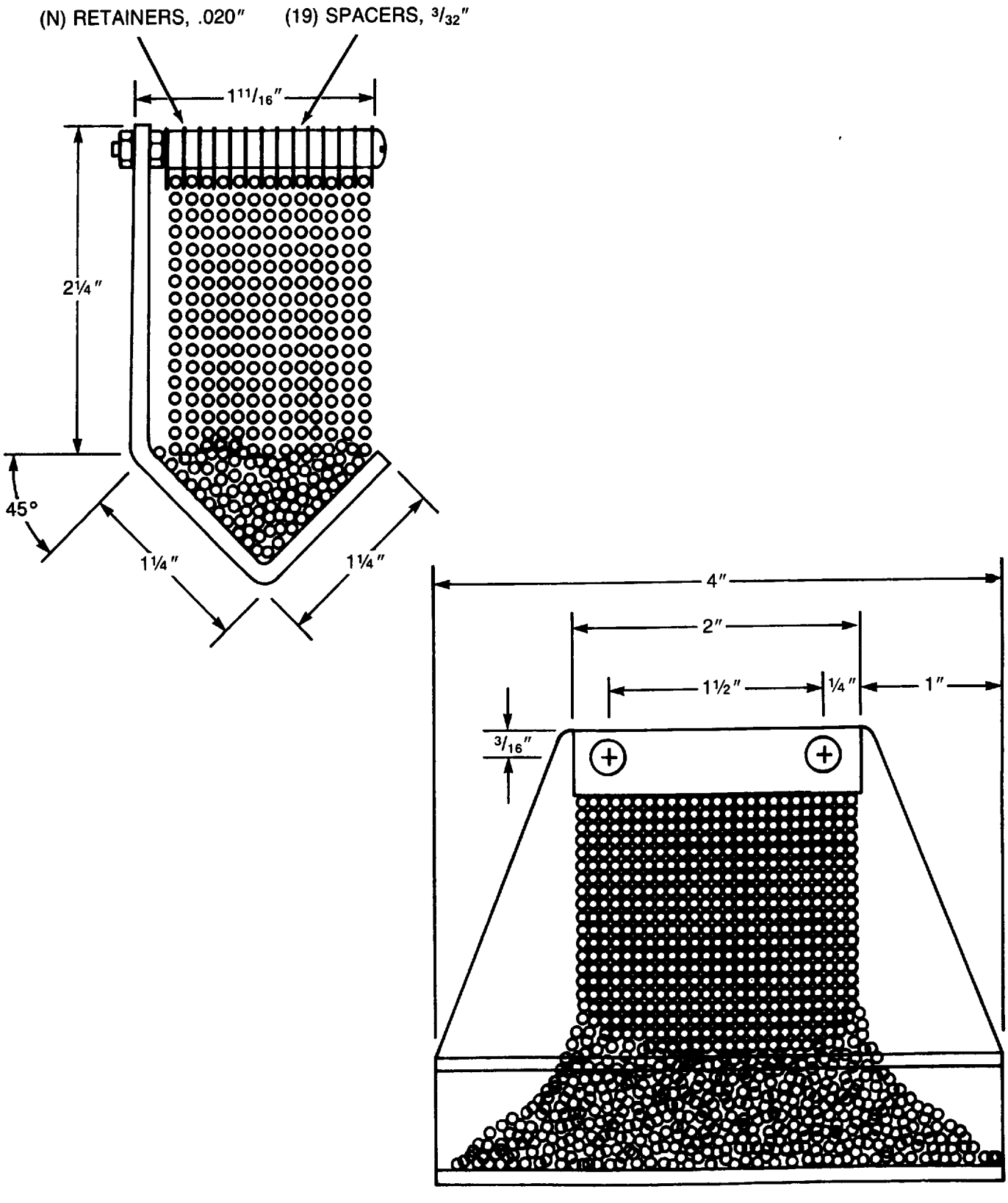

Figure 1-1
TYPICAL BEAD CHAIN ARRANGEMENT

Copyright National Electrical Manufacturers Association
Provided by IHS under license with NEMA
No reproduction or networking permitted without license from IHS
Not for Resale

1.3 VOLTAGE FREQUENCY

The frequency shall be 3.0 ± 0.5 kHz under any load condition. If equipment with multiple load or frequency settings is used, it shall contain a frequency meter or tripping device which will render the unit non-operational, if the frequency does not fall within the specified range.

NEMA Standard 11-20-1986.

1.4 VOLTMETER

The voltmeter measuring the rms voltage shall be capable of operating accurately up to 4 kHz, shall be connected directly to the measuring circuit, and shall continually indicate the electrode potential.

The full scale meter reading shall not be greater than 15 kV rms.

The meter accuracy shall be such that, when the voltage is adjusted to any specified value by a calibrating voltmeter, the actual electrode value will be within ± 2 percent of full scale.

NEMA Standard 11-20-1986.

1.5 REGULATION

The maximum current which the equipment can deliver to a purely capacitive load shall be no less than 40.0 milliamperes. The maximum current which can be delivered to a purely resistive load shall be no greater than 12.0 milliamperes. The voltage at the test electrode shall not change more than 5 percent between no load and full load conditions when the load consists of a capacitance passing a current of 10.0 milliamperes in parallel with a resistance passing a current of 1.0 milliampere.

NEMA Standard 11-20-1986.

1.6 FAILURE DETECTION CIRCUIT

There shall be a fault indicating circuit which shall give a visible or audible indication of a dielectric failure. The system shall be sufficiently sensitive so that a fault is indicated at any voltage above 2 kV when the electrode is arced to ground through a needle spark gap in series with a test network, for a duration of 1 millisecond (see Figure 1-2).

The needle electrode shall be a .005 inch (0.13 mm) diameter phosphor bronze wire held normal to a grounded moving metal plate and spaced with its end .010 inch ± .002 inches (0.25 mm ± 0.05 mm) from it. The 50 picofarad (pf) capacitor shall be of the high voltage type (15 kV rms) with polyethylene insulation, or suitable equivalent.

After a fault occurs, the equipment shall come back to full sensitivity and full potential within 40 milliseconds.

Equipment used for proof testing without stopping mechanism shall have a response time such that every segment of the wire will be subjected to the full test potential at full sensitivity and fault registering capability for at least 3 complete cycles.

There shall be no indication of a fault when the electrode is shorted to ground through a 2 megohm resistor at a voltage of 2 kV for a period of 2 seconds.

NEMA Standard 11-20-1986.

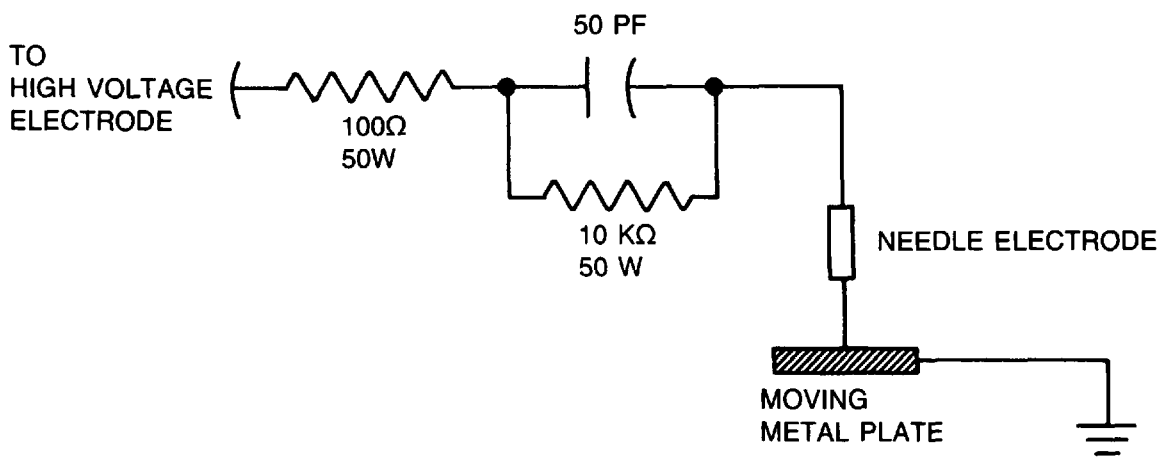

Figure 1-2
TYPICAL ARRANGEMENT FOR SENSITIVITY MEASUREMENT

1.7 SAFETY OF EQUIPMENT AND SAFE USE OF EQUIPMENT

Any equipment built or purchased for performance of this test shall comply with applicable electrical safety codes, and shall be used in accordance with the manufacturer's instructions for safe use.

NEMA Standard 11-20-1986.

Copyright National Electrical Manufacturers Association
Provided by IHS under license with NEMA
No reproduction or networking permitted without license from IHS
Not for Resale

Section 2
TEST PROCEDURE

2.1 SET-UP

The insulated wire shall be threaded through the electrode head and the conductor grounded at one or both ends. With the electrode head energized to the specified voltage, the wire shall pass from the payoff spool through the electrode and on to the takeup spool.

NEMA Standard 11-20-1986.

2.1.1 Voltage

The voltage shall be adjusted with the wire in the electrode. The equipment shall not be used if any noticeable voltage drop occurs when the wire starts moving through the electrode at any selected speed.

NEMA Standard 11-20-1986.

2.1.1.1 MAXIMUM VOLTAGE

Loading of the equipment beyond its power supply capabilities may result in malfunctioning or erroneous indications. The maximum allowable voltage may therefore have to be restricted due to capacitive loads. It may be calculated based on the minimum current necessary to trigger the detection circuit (40 milliamperes per paragraph 1.5) divided by $2\pi F$ (where F is frequency) and the capacitance of the wire in the electrode. For purposes of this determination, the maximum allowable frequency of 3.5 kHz should be used, so that maximum voltage is determined as follows:

$$V_{max} = \frac{1.82\ (10)^6}{C} \quad \text{(Volts)}$$

Where:

V = Volts
C = Capacity in Picofarads (pf)

Modern high performance insulation systems may not require any such determination for the resistive component to calculate the maximum allowable voltage; for lossy dielectrics, however, a maximum allowable voltage should also be calculated for the resistive component of the load current.

Authorized Engineering Information 11-20-1986.

2.1.2 Frequency

Equipment with multiple settings shall be adjusted such that the test frequency will be 3.0 ± 0.5 kHz.

NEMA Standard 11-20-1986.

2.1.3 Line Speed

The rate of speed, as a function of electrode length, shall be controlled by the requirements of 1.1.1.

NEMA Standard 11-20-1986.

2.1.3.1 MAXIMUM

The maximum acceptable line speed in feet per minutes (fpm) shall be determined as follows:

$\text{fpm} = \frac{5}{3} \times$ Frequency (Hz) × Electrode Length (in), when calculated for the lowest allowable frequency of 2.50 kHz. Therefore $\text{fpm}_{(max)} = 4167 \times$ Electrode Length (in).

Similarly, for metric units, line speed in meters per minute shall be determined as follows:

$\text{Meters per minutes} = \frac{1}{50} \times$ Frequency (Hz) × Electrode Length (mm).

Therefore:

Meters per minute $_{(max)} = 50 \times$ Electrode Length (mm) at 2.50 kHz.

NEMA Standard 11-20-1986.

2.1.3.2 MINIMUM

The minimum acceptable line speed shall be determined based on the maximum frequency of 3.50 kHz as follows:

Where Max. frequency = 3.50 kHz, Max. No. of cycles per given area = 600, and for one (1) inch of electrode length at $\frac{3.50\ \text{kHz}}{600\ \text{cycles}}$, then $\text{fpm}_{(min)}$

$= \frac{5.833\ \text{inch}}{\text{second}} \times \frac{60\ \text{seconds}}{\text{minute}} \times \frac{1\ \text{foot}}{12\ \text{inches}} = 29.2 \times$ Electrode Length (in)

Similarly, for metric units:

$\text{Meters per minute}_{(min)} = \frac{29.2\ \text{feet}}{\text{minute}/\text{inch}} \times \frac{.305\ \text{meter}}{\text{foot}}$

$\times \frac{.0394\ \text{millimeter}}{1\ \text{inch}} = .35 \times$ Electrode length (mm)

NEMA Standard 11-20-1986.

Copyright National Electrical Manufacturers Association
Provided by IHS under license with NEMA
No reproduction or networking permitted without license from IHS
Not for Resale

2.2 FAULT IDENTIFICATION

If any dielectric failures occur, they shall be cut out or suitably identified for subsequent removal, together with at least 2 inches (50.8 mm) of wire on each side of the fault. The equipment shall be wired to automatically de-energize the high voltage when the wire is stopped. During the string-up of a new length, every attempt shall be made to expose the entire length, including ends, to the specified voltage. Any ends not tested shall be clearly marked and removed subsequent to this test.

NEMA Standard 11-20-1986.

2.3 CALIBRATION AND FORM FACTOR

The instrument voltmeter and waveform shall be checked for compliance with this standard at 25, 50, 75, and 100 percent of each intended operating voltage scale by means of a calibrated electrostatic voltmeter with peak detecting attachment. The voltmeter without attachment shall be used to measure the rms voltage; the crest voltage shall be measured with the peak detecting attachment and the same electrostatic voltmeter shall be used for measurement of the rms value. The ratio of the crest value to the rms value constitutes the form factor which must fall within the limits specified in 1.2, under no load and full load conditions.

NEMA Standard 11-20-1986.

2.4 VENTILATION OF WORK AREA

Provisions for ventilation may have to be made when using the equipment described in this standard in a closed room, in order to remove any excess ozone which may be formed during the testing, particularly at higher voltages.

Authorized Engineering Information 11-20-1986.

Copyright National Electrical Manufacturers Association
Provided by IHS under license with NEMA
No reproduction or networking permitted without license from IHS

Not for Resale

September 1984

NEMA STANDARDIZATION

The purpose of NEMA Standards, their classification and status are set forth in certain clauses of the NEMA Bylaws, which are quoted below:

Purpose of Standards

National Electrical Manufacturers Association Standards are adopted in the public interest and are designed to eliminate misunderstandings between the manufacturer and the purchaser and to assist the purchaser in selecting and obtaining the proper product for its particular need. Existence of a National Electrical Manufacturers Association Standard does not in any respect preclude any member or nonmember from manufacturing or selling products not conforming to the standard.

(Bylaw—Art. V, Sec. 1)

Definition of a Standard

A standard of the National Electrical Manufacturers Association defines a product, process or procedure with reference to one or more of the following: nomenclature, composition, construction, dimensions, tolerances, safety, operating characteristics, performance, rating, testing, and the service for which they are designed.

(Bylaw—Art. V, Sec. 2, Subsection A)

Dimensions

Where dimensions are given for interchangeability purposes, alternate dimensions satisfying the other provisions of the standards publication may be capable of otherwise equivalent performance.

(NEMA Policy Memorandum 84-2, dated June 7, 1984)

Classes of Standards

National Electrical Manufacturers Association Standards are of two classes:

1. NEMA Standard, which relates to a product commercially standardized and subject to repetitive manufacture, which standard has been approved by at least 90 percent of the members of the Subdivision eligible to vote thereon;
2. Suggested Standard for Future Design, which may not have been regularly applied to a commercial product, but which suggests a sound engineering approach to future development, which standard has been approved by at least two-thirds of the members of the Subdivision eligible to vote thereon.

(Bylaw—Art. V, Sec. 2, Subsection B)

Authorized Engineering Information

Authorized Engineering Information consists of explanatory data and other engineering information of an informative character not falling within the classification of NEMA Standard or Suggested Standard for Future Design.

(Bylaw—Art. V, Sec. 6, 1st Sentence)

Official Standards Proposal

An Official Standards Proposal is an official draft of a proposed standard which is formally recommended to an outside organization(s) for consideration, comment and/or approval.

(Bylaw—Art. V, Sec. 4, Subsection A)

Identification of Status

Standards in NEMA Standards Publications are identified in the foreword or following each standard as "NEMA Standard" or "Suggested Standard for Future Design." These indicate the status of the standard. These words are followed by a date which indicates when the standard was adopted in its present form by the Association.

The material identified as "Authorized Engineering Information" and "Official Standards Proposal" is designated similarly.

Copyright National Electrical Manufacturers Association
Provided by IHS under license with NEMA
No reproduction or networking permitted without license from IHS
Not for Resale

HIGH TEMPERATURE INSULATED WIRE AND CABLE SECTION OF THE NATIONAL ELECTRICAL MANUFACTURERS ASSOCIATION

MEMBER COMPANIES

Barcel Wire and Cable Corp.
Irvine, CA

Belden Electrical Wire Products
/Cooper Industries
Geneva, IL

Cable USA, Inc.
Naples, FL

Champlain Cable Corp.
Winooski, VT

Continental Wire and Cable/Ericsson, Inc.
York, PA

Eaton Corp./Polymer Products Div.
Aurora, OH

General Electric Co.
Bridgeport, CT

Harbour Industries, Inc.
Shelburne, VT

The Kerite Co./Subs. of Hubbell, Inc.
Seymour, CT

Independent Cable, Inc.
Hudson, MA

Markel Corp.
Norristown, PA

Micro-TEK Corp.
Cinnaminson, NJ

Mohawk Wire & Cable Corp.
Leominster, MA

NEK, Cable, Inc.
Ronkonkoma, NY

Newcon Wire and Cable Corp.
New Haven, CT

The Okonite Co.
Ramsey, NJ

Philadelphia Insulated Wire Co.
Moorestown, NJ

Prestolite Wire Corp.
Farmington Hills, MI

Quirk Wire Co., Inc./DBA Wirecraft Products
West Brookfield, MA

Radix Wire Co.
Cleveland, OH

The Rockbestos Co.
New Haven, CT

Siecor
Charlotte, NC

Specialty Cable Corp.
Wallingford, CT

Surprenant Wire and Cable/Div. of
F. L. Industries, Inc.
Clinton, MA

Teledyne Thermatics
Elm City, NC

Thermo Electric Co., Inc.
Saddle Brook, NJ

Thermax Wire Corp.
Flushing, NY

Times Fiber Communications, Inc.
Wallingford, CT

Wirekraft/Div. of Bristol Corp.
Rolling Prairie, IN

Copyright National Electrical Manufacturers Association
Provided by IHS under license with NEMA
No reproduction or networking permitted without license from IHS
Not for Resale

ELECTRONIC WIRE AND CABLE SECTION
OF THE
NATIONAL ELECTRICAL MANUFACTURERS ASSOCIATION

MEMBER COMPANIES

Cable USA, Inc.
Naples, FL

Carol Cable Co., Inc.
Pawtucket, RI

Champlain Cable Corp.
Winooski, VT

Chicago Magnet Wire Corp.
Elk Grove Village, IL

Continental Wire & Cable/Ericsson, Inc.
York, PA

Eaton Corp./Polymer Products Div.
Aurora, OH

Ericsson, Inc.
Overland Park, KS

Essex Group, Inc./Power Conductor Div.
Marion, IN

General Electric Co./Wire and Cable Department
Bridgeport, CT

General Cable Co./Electrical Distributor Div.
Greenwich, CT

Kris-Tech Wire Co., Inc.
Rome, NY

Mohawk Wire & Cable Corp.
Leominster, MA

Newcon Wire and Cable Corp.
New Haven, CT

The Okonite Co.
Ramsey, NJ

Pacific Electricord Co.
Gardena, CA

Philadelphia Insulated Wire Co.
Moorestown, NJ

Pirelli Cable Corp.
Greenwood, SC

Prestolite Wire Corp.
Farmington Hills, MI

Surprenant/Div. of F. L. Industries, Inc.
Clinton, MA

Teledyne Thermatics
Elm City, NC

Thermo Electric Company, Inc.
Saddle Brook, NJ

Triangle PWC, Inc./Subs. of Triangle Industries, Inc.
New Brunswick, NJ

Wirekraft/Div. of Bristol Corp.
Rolling Prairie, IN

Copyright National Electrical Manufacturers Association
Provided by IHS under license with NEMA
No reproduction or networking permitted without license from IHS
Not for Resale