ANSI/ICEA T-27-581
NEMA WC 53

STANDARD TEST METHODS FOR EXTRUDED DIELECTRIC POWER, CONTROL, INSTRUMENTATION, AND PORTABLE CABLES FOR TEST

--`,,`-`-`,,`,,`,`,,`---

Copyright National Electrical Manufacturers Association
Provided by IHS under license with NEMA
No reproduction or networking permitted without license from IHS

Not for Resale

--`,,`,,`-`-`,,`,,`,`,,`---

Copyright National Electrical Manufacturers Association
Provided by IHS under license with NEMA
No reproduction or networking permitted without license from IHS

Not for Resale

Approved as an American National Standard
ANSI Approval Date: July 23, 2002

Insulated Cable Engineers Assoc., Inc. Publication No. T-27-581-2002
NEMA Standards Publication No. WC 53-2000

Standard Test Methods for Extruded Dielectric Power, Control, Instrumentation, and Portable Cables for Test

Published by:

National Electrical Manufacturers Association
1300 North 17th Street, Suite 1847
Rosslyn, Virginia 22209

www.nema.org

© Copyright 2003 by the National Electrical Manufacturers Association and the Insulated Cable Engineers Association, Incorporated (ICEA). All rights including translation into other languages reserved under the Universal Copyright Convention, the Berne Convention for the Protection of Literary and Artistic Works, and the International and Pan American Copyright Conventions.

Copyright National Electrical Manufacturers Association
Provided by IHS under license with NEMA
No reproduction or networking permitted without license from IHS
Not for Resale

NOTICE AND DISCLAIMER

The information in this publication was considered technically sound by the consensus of persons engaged in the development and approval of the document at the time it was developed. Consensus does not necessarily mean that there is unanimous agreement among every person participating in the development of this document.

The National Electrical Manufacturers Association (NEMA) and the Insulated Cable Engineers Association (ICEA) standards and guideline publications, of which the document contained herein is one, are developed through a voluntary consensus standards development process. This process brings together persons who have an interest in the topic covered by this publication. While NEMA and ICEA administers the process and establishes rules to promote fairness in the development of consensus, they do not independently test, evaluate, or verify the accuracy or completeness of any information or the soundness of any judgements contained in its standards and guideline publications.

NEMA and ICEA disclaims liability for personal injury, property, or other damages of any nature whatsoever, whether special, indirect, consequential, or compensatory, directly or indirectly resulting from the publication, use of, application, or reliance on this document. NEMA and ICEA disclaims and makes no guaranty or warranty, expressed or implied, as to the accuracy or completeness of any information published herein, and disclaims and makes no warranty that the information in this document will fulfill any of your particular purposes or needs. NEMA and ICEA do not undertake to guarantee the performance of any individual manufacturer or seller's products or services by virtue of this standard or guide.

In publishing and making this document available, NEMA and ICEA are not undertaking to render professional or other services for or on behalf of any person or entity, nor is NEMA and ICEA undertaking to perform any duty owed by any person or entity to someone else. Anyone using this document should rely on his or her own independent judgement or, as appropriate, seek the advice of a competent professional in determining the exercise of reasonable care in any given circumstances. Information and other standards on the topic covered by this publication may be available from other sources, which the user may wish to consult for additional views or information not covered by this publication.

NEMA and ICEA have no power, nor do they undertake to police or enforce compliance with the contents of this document. NEMA and ICEA do not certify, test, or inspect products, designs, or installations for safety or health purposes. Any certification or other statement of compliance with any health or safety-related information in this document shall not be attributable to NEMA and ICEA and is solely the responsibility of the certifier or maker of the statement.

© Copyright 2003 by the National Electrical Manufacturers Association and the Insulated Cable Engineers Association, Incorporated.

Copyright National Electrical Manufacturers Association
Provided by IHS under license with NEMA
No reproduction or networking permitted without license from IHS
Not for Resale

CONTENTS

Page

Foreword……iv
Scope……v

Section 1 INDUSTRY STANDARDS REFERENCED IN THIS STANDARD
Section 2 ELECTRICAL METHODS

2.1 Conductor DC Resistance……2
2.1.1 Method When Sample Nominal Resistance is 1 Ohm or More……2
2.1.2 Method When Sample Nominal Resistance is Less Than 1 Ohm……2
2.1.3 Precautions for Short Sample Method……2
2.1.4 Converting Measured Conductor Resistance to Resistance at 25 °C……3
2.2 Voltage Tests on Completed Cables……3
2.2.1 General……3
2.2.2 AC Voltage Test……4
2.2.3 DC Voltage Test……4
2.2.4 Spark Testing……4
2.3 Insulation Resistance……6
2.3.1 Single Conductor Cables……6
2.3.2 Multiple Conductor Cables……6
2.3.3 Method to Determine the 1°F Coefficient Factor for an Insulation……6
2.3.4 Converting Insulation Resistance to Insulation Resistance Constant……7
2.4 Dissipation Factor (Df), Capacitance (C), and Dielectric Constant……9
2.5 Suitability of Insulation Compounds for Use on DC Circuits in Wet Locations……9
2.6 Accelerated Water Absorption Test, Electrical Method at 60 Hz (EM-60)……10
2.7 Dielectric Constant and Voltage Withstand for Nonconducting Stress Control Layers……10
2.8 Specific Surface Resistivity……11
2.9 U-Bend Discharge Resistance……11
2.10 Track Resistance……11
2.11 Volume Resistivity……12
2.11.1 Conductor Stress Control……12
2.11.2 Insulation Shield……12
2.12 Semiconducting Jacket Radial Resistivity Test……13
2.12.1 Sample Preparation……13
2.12.2 Test Equipment Setup……14
2.12.3 Calculation……14
2.13 Dry Electrical Test for EPR Class III Insulation(Shielded Medium Voltage Only)……15
2.13.1 Test Samples……15
2.13.2 Test Procedure……15
2.13.3 Electrical Measurements……15
2.14 Discharge Resistance Test for EPR Class IV Insulation Only……15
2.14.1 Test Specimens……15
2.14.2 Test Environment……15
2.14.3 Test Electrodes……15
2.15 Dissipation Factor Characterization Test……16
2.15.1 Test Samples……16
2.15.2 Thermal Conditioning……16
2.15.3 Dissipation Factor Testing……16
2.16 High Voltage Time Test……16
2.17 Hot Impulse Test……17
2.18 Cyclic Aging……17
2.18.1 Test Samples……17
2.18.2 Sample Preparation……17

© Copyright 2003 by the National Electrical Manufacturers Association and the Insulated Cable Engineers Association, Incorporated.

Copyright National Electrical Manufacturers Association
Provided by IHS under license with NEMA
No reproduction or networking permitted without license from IHS
Not for Resale

2.18.3 Conduit 17
2.18.4 Load Cycle 17
2.19 Accelerated Water Treeing Test (AWTT) 17
2.19.1 General 17
2.19.2 Sample Preparation 18
2.19.3 Aging Time 18
2.19.4 Test Procedure 18
2.19.5 Water pH 19
2.20 Thermomechanical Qualification Test - Optional for Jacketed Cable Only 19
2.20.1 Procedure 19
Section 3 DIMENSIONAL METHODS
3.1 Conductor Cross-Sectional Area by Diameter Measurements 20
3.2 Thickness of Components over a Conductor 20
3.2.1 Optical Measuring Device Method for Any Component 20
3.2.2 Micrometer Method for Unbonded Components 20
3.2.3 Extruded Insulation or Insulation Shield or Jacket 20
3.2.4 Tape 20
3.2.5 Sheath 20
3.2.6 Bedding and Servings 21
3.3 Diameter over Cable Components 21
3.3.1 Micrometer Method for Conductors 21
3.3.2 Method for any Component except Conductors 21
3.3.3 Tape Method for any Component having a Diameter 0.750 inch (19.1 mm) or Greater 21
3.4 Protrusion, Indentation and Irregularity Measurement 21
Section 4 PHYSICAL METHODS
4.1 Adhesion (Stripping Force) 23
4.2 Cold Bend 23
4.3 Heat Deformation (Distortion) 23
4.3.1 Insulation Deformation 23
4.3.2 Deformation of Jackets, Insulating and Conducting 25
4.4 Flexibility Test for Interlocked Armor 25
4.5 Tear Resistance 25
4.6 Gravimetric Water Absorption 26
4.7 Direction and Length of Lay 27
4.8 Jacket Irregularity Inspection 27
4.9 Hot Creep Test 28
4.10 Vertical Tray Flame Test 28
4.10.1 70,000 BTU 28
4.10.2 210,000 BTU 28
4.11 Physical and Aging Tests for Insulation, Jackets,and Nonmetallic Conducting Materials 28
4.11.1 Sampling 28
4.11.2 Number of Test Specimens 28
4.11.3 Size and Preparation of Specimens 28
4.11.4 Calculation for Area of Test Specimens 29
4.11.5 Physical Test Procedures 29
4.11.6 Retests 30
4.11.7 Tensile Strength Test 30
4.11.8 Tensile Stress Test 30
4.11.9 Elongation Test 30
4.11.10 Set Test 30
4.11.11 Aging Tests 31
4.11.12 Physical Tests for Nonmetallic Conducting Materials Intended for Extrusion 31

© Copyright 2003 by the National Electrical Manufacturers Association and the Insulated Cable Engineers Association, Incorporated.

Copyright National Electrical Manufacturers Association
Provided by IHS under license with NEMA
No reproduction or networking permitted without license from IHS
Not for Resale

4.12 Absorption Coefficient 32
4.13 Heat Shock 32
4.14 Environmental Cracking 32
4.14.1 Test Specimens 32
4.14.2 Test Procedures 32
4.15 Method for Flexibility Test for Continuous Corrugated Armor 32
4.16 Shrinkback Test 33
4.16.1 Sample Preparation 33
4.16.2 Test Procedure 33
4.17 Wafer Boil Test for Conductor and Insulation Shields 33

LIST OF TABLES

Table 2-1 FACTORS FOR CONVERTING MEASURED DC RESISTANCE OF CONDUCTORS TO 25°C 3
Table 2-2 TEMPERATURE CORRECTION FACTORS (TCF) FOR CONVERTING INSULATION RESISTANCE TO 15.6°C 8
Table 4-1 LOAD VS. CONDUCTOR SIZE IN HEAT DEFORMATION TEST 24
Table 4-2 JACKET IRREGULARITY INSPECTION 27

© Copyright 2003 by the National Electrical Manufacturers Association and the Insulated Cable Engineers Association, Incorporated.

Copyright National Electrical Manufacturers Association
Provided by IHS under license with NEMA
No reproduction or networking permitted without license from IHS
Not for Resale

Foreword

This Standard Test Methods Publication for Extruded Dielectric Power, Control, Instrumentation and Portable Cables was developed by the Insulated Cable Engineers Association, Inc. (ICEA) and was approved by the National Electrical Manufactures Association (NEMA).

ICEA/NEMA Standards are adopted in the public interest and are designed to eliminate misunderstandings between the manufacturers and the user and to assist the user in selecting and obtaining the proper product for his or her particular need. The user of this Standards Publication is cautioned to observe any health or safety regulations and rules relative to the use of the test procedures covered by this document.

Requests for interpretation of this standard must be submitted in writing to:

Insulated Cable Engineers Association, Inc.
P.O. Box 1568
Carrollton, GA 30112

An official written interpretation will be made by the Association.

Suggestions for improvements gained in the use of this publication will be welcomed by the Association.

© Copyright 2003 by the National Electrical Manufacturers Association and the Insulated Cable Engineers Association, Incorporated.

--`,,`,,`-`-`,,`,,`,`,,`---

Copyright National Electrical Manufacturers Association
Provided by IHS under license with NEMA
No reproduction or networking permitted without license from IHS
Not for Resale

Scope

This standard applies to the testing of extruded dielectric insulated power, control, instrumentation, and portable cables.

Included in this standard are many, but not all, of the test methods to which reference is made in ICEA/NEMA Standards for Cables.

Additional test methods that may be germane to several cable designs are described in various ASTM documents and in the following ICEA Publications:

T-24-380 *Guide for Partial Discharge Test Procedure*
T-25-425 *Guide for Establishing Stability of Volume Resistivity of Conducting Polymeric Component of Power Cables*
T-26-465 *Guide for Frequency of Sampling Extruded Dielectric Power, Control, Instrumentation, and Portable Cables for Test*
T-28-562 *Test Method for Hot Creep of Polymeric Insulations*
T-29-520 *Procedure for Conducting Vertical Cable Tray Flame Tests with a Theoretical Heat Input Rate of 210,000 B.T.U./Hour*
T-30-520 *Procedure for Conducting Vertical Cable Tray Flame Tests with a Theoretical Heat Input Rate of 70,000 B.T.U./Hour*
T-31-610 *Guide for Conducting a Longitudinal Water Penetration Resistance Test for Sealed Conductor*
T-32-645 *Guide for Establishing Compatibility of Sealed Conductor Filler Compounds with Conducting Stress Control Materials*
T-34-664 *Guide for Conducting a Longitudinal Water Penetration Resistance Tests on Longitudinal Water Blocked Cables*

Not all the tests mentioned above are relevant for a given cable design or a given application.

A few specialized test methods are described in ICEA/NEMA Standard Publications, for example, S-19-81/WC 3, Rubber Insulated Wires and Cables.

When a procedure for measuring a specified parameter is not specified, that parameter shall be determined by any suitable means.

When another standard is referenced in this document, its title and date of issue may be found in Section 1. The reference is only to that specified document.

In this standard, temperatures are expressed in degrees Celsius, weights in grams, and metal resistivities in nanoohm-meter. Other properties are expressed in non-metric units used in the U.S.A.

Room temperature is defined as 25±5°C. Where this temperature range cannot be maintained, (test) measurements may be made at the prevailing ambient room temperature, which shall be recorded.

The Fahrenheit equivalents for Celsius degrees may be calculated by the equation

$$\deg F = \left[1.8\left(\deg \quad C\right)\right] + 32$$

The ounce equivalents to grams may be calculated by dividing the number of grams by 28.4.
The ohm cmil per ft equivalents to nanoohm•meter may be calculated by multiplying the nanoohm•meter value by 0.602.

© Copyright 2003 by the National Electrical Manufacturers Association and the Insulated Cable Engineers Association, Incorporated.

Copyright National Electrical Manufacturers Association
Provided by IHS under license with NEMA
No reproduction or networking permitted without license from IHS
Not for Resale

Conductor size is expressed in cross-sectional area in thousand circular mils (kcmil). For convenience, in the text and tables, only the equivalent AWG size is used for 211.6 kcmil (4/0 AWG) and smaller. For kcmil values of AWG sizes see the following table:

AWG	kcmil	AWG	kcmil	AWG	kcmil
22	0.640	13	5.18	4	41.74
21	0.812	12	6.53	3	52.62
20	1.02	11	8.23	2	66.36
19	1.29	10	10.38	1	83.69
18	1.62	9	13.09	1/0	105.6
17	2.05	8	16.51	2/0	133.1
16	2.58	7	20.82	3/0	167.8
15	3.26	6	26.24	4/0	211.6
14	4.11	5	33.09		

To convert values in a non-metric unit to the approximate value in an appropriate metric unit, multiply the value in the non-metric unit by the appropriate number from the following table:

From	To	Multiplier
inches (in)	millimeters (mm)	25.4
feet (ft)	meter (m)	0.305
ohms per 1000 feet (Ω/1000 ft)	milliohms per meter (mΩ/m)	3.28
square inch (in^2)	square millimeter (mm^2)	645.0
thousand circular mils (kcmil)	square millimeter (mm^2)	0.507
kilovolts per inch or volts per mil (kV/in or V/mil)	megavolts per meter or kilovolts per millimeter (MV/m or kV/mm)	0.0394
pounds per square inch (psi)	kilopascals (kPa)	6.89
pounds tension or force per inch (lb/in)	Newtons per meter (N/m)	175.0
megohms-1000 ft (MΩ-1000 ft)	megohms-meter (MΩ-m)	305.0
gigaohms-1000 ft (GΩ-1000 ft)	gigaohms-meter (GΩ-m)	305.0
liquid ounces (liq oz)	cubic centimeter (cm^3)	29.6

In this standard the following nomenclature is used:

Jacket- polymeric (nonmetallic) protective covering
Insulation Shield- conducting polymeric (nonmetallic) layer
Cable Shield-metallic layer
Sheath-metallic layer
Armor-metallic layer

© Copyright 2003 by the National Electrical Manufacturers Association and the Insulated Cable Engineers Association, Incorporated.

Copyright National Electrical Manufacturers Association
Provided by IHS under license with NEMA
No reproduction or networking permitted without license from IHS
Not for Resale

Section 1
INDUSTRY STANDARDS REFERENCED IN THIS DOCUMENT

Copies of the above documents may be obtained from the appropriate source as follows:

American Society for Testing and Materials (ASTM)
100 Barr Harbor Drive
West Conshohocken, PA 19428-2959

ASTM B 193-95	*Resistivity of Electrical Conductor Materials, Test Method for*
ASTM D 257-93	*DC Resistance or Conductance of Insulating Materials, Test Method for*
ASTM D 412-98a	*Vulcanized Rubber and Thermoplastic Elastomers — Tension*
ASTM D 471-98	*Rubber Property — Effect of Liquids, Test Method for*
ASTM D 746-98	*Brittleness Temperature of Plastics and Elastomers by Impact*
ASTM D 2132-98	*Dust-and-Fog Tracking and Erosion Resistance of Electrical Insulating Materials*, Test Method for
ASTM D 2275-95	*Voltage Endurance of Solid Electrical Insulating Materials Subjected to Partial Discharge (Corona) on the Surface, Test Method for*
ASTM D 2765-95	*Determination of Gel Content and Swell Ratio of Crosslinked Ethylene Plastics, Test Method for*
ASTM D3349-93	*Absorption Coefficient of Ethylene Polymer Material Pigmented with Carbon Black, Test Method for*

Global Engineering Documents
15 Inverness Way East
Englewood, CO 80112-5776

ICEA T-28-562	*Measurement of Hot Creep of Polymeric Insulations, Test Methods for*
ICEA T-29-520	*Procedure for Conducting Vertical Cable Tray Flame Tests with a Theoretical Heat Input Rate of 210,000 B.T.U./Hour*
ICEA T-30-520	*Procedure for Conducting Vertical Cable Tray Flame Tests with a Theoretical Heat Input Rate of 70,000 B.T.U./Hour*

National Technical Information Service
U.S. Department of Commerce
Springfield, VA 22161

National Bureau of Standards Handbook No. 100	*Copper Wire Tables (February 4, 1966)*
National Bureau of Standards Handbook No. 109	*Aluminum Wire Tables (February 1972)*

© Copyright 2003 by the National Electrical Manufacturers Association and the Insulated Cable Engineers Association, Incorporated.

Copyright National Electrical Manufacturers Association
Provided by IHS under license with NEMA
No reproduction or networking permitted without license from IHS
Not for Resale

Section 2
ELECTRICAL METHODS

2.1 CONDUCTOR DC RESISTANCE

DC resistance shall be determined on a sample of any length of a ft or longer. When the nominal resistance of the sample is 1 ohm or more, the procedure in 2.1.1 shall be followed. When the nominal resistance of the sample is less than 1 ohm, the procedure in 2.1.2 shall be followed. Other measuring techniques may be suitable if the accuracy is determined to meet the requirements of 2.1. When a sample is cut from a longer length, either for the original measurement or to verify the measurement on the long length, the procedure in 2.1.2 and precautions in 2.1.3 shall be followed.

2.1.1 Method When Sample Nominal Resistance is 1 Ohm or More

The dc resistance shall be measured with a Kelvin bridge, a potentiometer, or a Wheatstone bridge.

2.1.2 Method When Sample Nominal Resistance is Less Than 1 Ohm

The dc resistance shall be measured with a Kelvin bridge or a potentiometer.

2.1.3 Precautions for Short Sample Method

When measurements are made on a short sample, the following precautions shall be taken:

Current contacts shall be made in such a way as to ensure essentially uniform current density among the wires.

When potential leads are used, the distance between each potential contact and the corresponding current contact shall be at least equal to 1.50 times the circumference of the specimen. When a Kelvin-type bridge is used, the yoke resistance (between reference standard and test specimen) shall be appreciably smaller than that of either the reference standard or the test specimen unless a suitable lead compensation is used or it is known that the coil and lead ratios are sufficiently balanced so that variation in yoke resistance will not decrease the bridge accuracy below that given in 2.1.3.4.

The distance between potential electrodes shall be measured to an accuracy of ± 0.05 percent. To ensure this accuracy in measuring the length between potential contacts, the surface in contact with the test specimen shall be a substantially sharp knife-edge.

Resistance measurements shall be made to an accuracy of ± 0.15 percent. To ensure a correct reading, the reference standard and the test specimen should be allowed to come to the same temperature as the surrounding medium. (If the reference standard is made of manganin, it is possible to obtain correct readings with the test specimen at reference temperatures other than room temperature.)

In all resistance measurements, the measuring current raises the temperature of the medium. Therefore, the magnitude of the current shall be low and the time of its use short enough so that changes in resistance cannot be detected with the galvanometer.

In bridge measurements, the potential contact resistance shall be as low as possible. If low contact resistance cannot be achieved, appropriate contact-resistance corrective circuits shall be used. To eliminate errors due to contact potential, two readings, one direct and one with current reversed, shall be taken in direct succession. Check tests may be made by turning the specimen end for end and repeating the test. The material used for the two potential contacts shall be the same to minimize imbalanced contact potentials. If necessary, the contact surfaces shall be cleaned.

© Copyright 2003 by the National Electrical Manufacturers Association and the Insulated Cable Engineers Association, Incorporated.

Copyright National Electrical Manufacturers Association
Provided by IHS under license with NEMA
No reproduction or networking permitted without license from IHS
Not for Resale

2.1.4 Converting Measured Conductor Resistance to Resistance at 25 °C

To convert measured resistance to resistance at 25 °C, the formulas and tabulated factors given in Table 2-1 or the procedure in ASTM B 193 shall be used.

The conversion factors given in Table 2-1 are satisfactory for most applications. They are based upon copper having 100 percent conductivity (resistivity = 17.582 nanoohm•meter at 25 °C) and aluminum having 61 percent conductivity (resistivity = 28.834 nanoohm•meter at 25 °C) The factors are derived from the formulas:

$$R_1 = R_2\left[\frac{259.5}{234.5 + T_2}\right] \quad \text{for copper} \qquad R_1 = R_2\left[\frac{253.0}{228.0 + T_2}\right] \quad \text{for aluminum}$$

Where:
R_1=Resistance at 25 °C
R_2= Measured Resistance at Temperature T_2

For more accurate determination of resistance, allowing for different conductivity, see Copper Wire Tables, National Bureau of Standards, Handbook No. 100 or Aluminum Wire Tables, National Bureau of Standards Handbook 109 and ASTM B 193.

Table 2-1
FACTORS FOR CONVERTING MEASURED DC RESISTANCE OF CONDUCTORS TO 25°C

Temperature °C	Multiplying Factor for Copper	Multiplying Factor for Aluminum
0	1.107	1.110
5	1.084	1.085
10	1.061	1.063
15	1.040	1.041
20	1.020	1.020
25	1.000	1.000
30	0.981	0.981
35	0.963	0.962
40	0.945	0.944
45	0.928	0.927
50	0.912	0.910
55	0.896	0.894
60	0.881	0.878
65	0.866	0.863
70	0.852	0.849
75	0.838	0.835
80	0.825	0.821
85	0.812	0.808
90	0.800	0.796

2.2 VOLTAGE TESTS ON COMPLETED CABLES

2.2.1 General

These tests consist of voltage tests on each length of completed cable. Except for the dc spark test and the ac spark test the voltage shall be applied between the conductor or conductors and the metallic sheath, metallic shield, metallic armor, or water and the rate of increase from the initially applied voltage to the specified test voltage shall be approximately uniform and shall be not more than 100 percent in 10 seconds nor less than 100 percent in 60 seconds.

© Copyright 2003 by the National Electrical Manufacturers Association and the Insulated Cable Engineers Association, Incorporated.

Copyright National Electrical Manufacturers Association
Provided by IHS under license with NEMA
No reproduction or networking permitted without license from IHS
Not for Resale

2.2.1.1 Cables Without Metallic Sheath Metallic Shield, Or Metallic Armor

2.2.1.1.1 Single Conductor Cable and Assemblies without an Overall Jacket

Single conductor cable and assemblies of single conductor cables shall be tested by either the ac voltage test in water (see 2.2.2), the dc voltage test in water (see 2.2.3), the ac spark test (see 2.2.4) or the dc spark test (see 2.2.5).

When wet testing is utilized, the following shall apply:

a. Single conductor cable and parallel assemblies of single conductor cable shall be immersed in water for at least 6 hours and tested while immersed.
b. Twisted assemblies of two or more conductors without an overall jacket or covering, shall be immersed in water for at least 1 hour and tested while immersed.
c. Each insulated conductor shall be tested against all other conductors connected to the grounded water.

2.2.1.1.2 Multiple-conductor Cable with an Overall Jacket

Multiple-conductor cables shall be tested prior to application of the jacket by either sparking testing or wet testing (see 2.2.1.1.1). After the overall jacket is applied, each insulated conductor shall be tested against all other conductors connected to ground. Immersion in water is not required.

2.2.1.2 Cables With Metallic Sheath Metallic Shield, Or Metallic Armor

All cables of this type shall be tested with the metallic sheath, shield or armor grounded, without immersion in water, at the test voltage specified. For cables having a metallic sheath, shield or armor over the individual conductor(s), the test voltage shall be applied between insulated conductor(s) and ground. For multi-conductor cables with nonshielded individual conductors having a metallic sheath, shield or armor over the cable assembly, the test voltage shall be applied between each insulated conductor and all other conductors and ground.

2.2.2 AC Voltage Test

This test shall be made with an alternating potential from a transformer and generator of ample capacity but in no case less than 5 kVa. The frequency of the test voltage shall be nominally between 49 and 61 hertz and shall have a wave shape approximating a sine wave as closely as possible.

The initially applied ac test voltage shall be not greater than the rated ac voltage of the cable under test.

The duration of the ac voltage test shall be 5 minutes.

2.2.3 DC Voltage Test

This test shall be made after the insulation resistance test described in 2.3. The equipment for the dc voltage test shall consist of a battery, generator, or suitable rectifying equipment and shall be of ample capacity.

The initially applied dc voltage shall be not greater than 3.0 times the rated ac voltage of the cable.

The duration of the dc voltage test shall be 15 minutes for cables with insulation shield and 5 minutes for cables without insulation shield.

2.2.4 Spark Testing

Use of spark test equipment to evaluate irregularities of jackets over metal components is covered in 4.8.

© Copyright 2003 by the National Electrical Manufacturers Association and the Insulated Cable Engineers Association, Incorporated.

Copyright National Electrical Manufacturers Association
Provided by IHS under license with NEMA
No reproduction or networking permitted without license from IHS
Not for Resale

2.2.4.1 Equipment

A spark tester shall include a suitable source of ac or dc potential, an electrode, a voltmeter, a fault-signal device or system, and the necessary electrical connections.

Under all normal conditions of leakage current, the potential source of a spark tester shall maintain the specified test voltage between the electrode and ground. The core of a transformer as well as one end of its secondary winding shall be reliably connected to ground (earth). A potential source shall not be connected to more than one electrode.

The electrode shall be of the link- or bead-chain or other type capable of maintaining contact throughout its length with the periphery of the cable being tested. The bottom of the metal electrode enclosure shall be U or V shaped, the chains shall have a length appreciably greater than the depth of the enclosure, and the width of the trough shall be approximately 1.5 in. greater than the diameter of the largest size of wire that is tested.

If a bead-chain electrode is used, the beads shall have a diameter of 3/16 inch. The longitudinal spacing of the chains shall not be more than ½ inch. The transverse spacing of the chains shall not be more than 3/8 inch but a spacing of ½ inch is acceptable if the transverse rows of chain are staggered.

The electrode shall be provided with a grounded (earthed) metal screen or an equivalent guard to prevent persons from touching the electrode.

The voltmeter shall be connected in the circuit to indicate the actual test potential at all times.

The equipment shall include a light, counter, or other device or system that gives a visible signal in the event of a fault. When a fault is detected, the signal shall be maintained until the indicator is reset manually.

2.2.4.2 Procedure

The length of the electrode is not specified, but the rate of speed at which the wire travels through the electrode shall ensure that any point on the wire is in contact with the electrode for not less than 0.05 seconds with dc or 9 cycles with ac.

The electrode shall make contact with the entire exposed surface of a single-conductor cable and of an assembly of twisted single-conductor cables.

Where an assembly of twisted single-conductor cables is subjected to the ac or dc spark test, the individual conductors shall be similarly tested prior to assembly.

The conductor, cable shield, sheath or armor, as applicable, of the cable shall be connected to ground (earthed) during the spark test. A ground (earth) connection shall be made at both the pay-off and take-up reels except that, if the conductor, cable shield, sheath or armor was tested for continuity prior to conduct of the spark test and found to be of one integral length, the ground (earth) connection need be made at only one point-at either the take-up or pay-off reel. In any case, a reel at which a ground (earth) connection is made shall be bonded directly to the ground (earth) on the potential source of the spark tester.

The maximum speed of the cable under ac spark test may be determined in either U.S. customary units or in metric equivalents as follows: (This paragraph is approved by NEMA as Authorized Engineering Information.)

a. U.S. Customary Units Formula for Determining Maximum Speed of Cable

© Copyright 2003 by the National Electrical Manufacturers Association and the Insulated Cable Engineers Association, Incorporated.

Copyright National Electrical Manufacturers Association
Provided by IHS under license with NEMA
No reproduction or networking permitted without license from IHS
Not for Resale

$$MS = \frac{5}{9}(F)(EL)$$

Where:
MS = Maximum speed in ft per minute
F = Frequency in Hertz
EL = Electrode length in inches

b. Equivalent Metric Formula for Determining Maximum Speed of Cable.

$$MS = \frac{1}{50}(F)(EL)$$

Where:
MS = Maximum speed in meters per minute
F = Frequency in Hertz
EL = Electrode length in mm

2.2.4.3 Failure

Any indication by the fault indicator shall constitute a failure.

2.3 INSULATION RESISTANCE

The test apparatus shall be in accordance with ASTM D 257. Measurements shall be taken according to 2.3.1 or 2.3.2. The conductor under the test shall be connected to the negative terminal of the test equipment and readings shall be taken after an electrification of 60 seconds with a dc voltage of 300 ± 200 volts.

2.3.1 Single Conductor Cables

Measurements shall be taken between the conductor and cable shield or water.

2.3.2 Multiple Conductor Cables

2.3.2.1 Nonshielded Cables

Measurements shall be taken between each conductor and all other conductors connected to ground.

2.3.2.2 Shielded Cables

Measurements shall be taken between the conductor and cable shield.

2.3.3 Method to Determine the 1°F Coefficient Factor for an Insulation

Three representative samples shall be obtained. Preferred are 14 AWG wires with a 0.045 inch wall of insulation. The samples shall be of sufficient length to yield insulation resistance values that are within the calibrated range of the measuring instrument at the lowest water bath temperature.

The three samples shall be immersed in a water bath equipped with heating, cooling, and circulating facilities, with the ends of the samples extended at least 2 ft above the surface of the water and properly prepared for minimum leakage. The samples shall be left in the water at room temperature for 16 hours before adjusting the bath temperature to 10 °C or before transferring the samples to 10°C test temperature bath.

© Copyright 2003 by the National Electrical Manufacturers Association and the Insulated Cable Engineers Association, Incorporated.

--`,,`,,`-`-`,,`,,`,`,,`---
Copyright National Electrical Manufacturers Association
Provided by IHS under license with NEMA
No reproduction or networking permitted without license from IHS
Not for Resale

The resistance of the conductor shall be measured at suitable intervals until it remains unchanged for at least 5 minutes. The insulation will then be at the temperature of the bath as read on the bath thermometer. Insulation resistance shall then be measured in accordance with 2.3.

Each of the three samples shall be exposed to successive water temperature of 10, 16, 22, 28, and 35 °C and, returning, 28, 22, 16, and 10 °C. Insulation resistance readings shall be taken at each temperature after equilibrium has been established.

The two sets of readings taken at the same temperature shall be averaged and, together with the reading at 35 °C plotted on semi-log paper with temperature along the linear axis. The insulation resistance value at 15.6 °C (60 °F) shall be read from the plot.
The 1 °F coefficient shall be calculated by dividing the insulation resistance at 15.6 °C (60 °F) by that at 16.1 °C (61°F).

The resistivity coefficient, C_{IR}, rounded off to two decimal places, shall be used to enter the appropriate column in Table 2-2 in order to find the factor for converting to insulation resistance at 15.6 °C (60 °F) the insulation resistance measured at the temperature, t, of the production or shipping length.

2.3.4 Converting Insulation Resistance to Insulation Resistance Constant

The measured insulation resistance (IR), converted to resistance at 15.6 °C (60 °F), shall be converted to insulation resistance constant (IRK) by use of measured diameters and the following equation:

$$IRK = \frac{IR(TCF)}{\log_{10}\frac{D}{d}}$$

Where:

IRK	=	Insulation resistance constant in megohms-1000 ft
IR	=	Insulation resistance in megohms-1000 ft, at 15.6 °C
TCF	=	Temperature correction factor for converting insulation resistance to 15°C
D	=	Diameter over the insulation in inches
d	=	Diameter over conductor stress control layer, when present, or over conductor, in inches

NOTE—It may be more convenient, at times, to express IR and IRK in gigaohms- or teraohms-1000 ft. A gigaohm equals 10^9ohms, a teraohm equals 10^{12}ohms, while a megohm equals 10^6ohms.

© Copyright 2003 by the National Electrical Manufacturers Association and the Insulated Cable Engineers Association, Incorporated.

Copyright National Electrical Manufacturers Association
Provided by IHS under license with NEMA
No reproduction or networking permitted without license from IHS
Not for Resale

Table 2-2
TEMPERATURE CORRECTION FACTORS (TCF) FOR CONVERTING INSULATION RESISTANCE TO 15.6 °C

Temperature		1 °F Coefficient*									
°F	°C	1.03	1.04	1.05	1.06	1.07	1.08	1.09	1.10	1.11	1.12
40	4.4	0.55	0.46	0.38	0.31	0.26	0.22	0.18	0.15	0.12	0.10
41	5.0	0.57	0.48	0.40	0.33	0.28	0.23	0.19	0.16	0.14	0.12
42	5.6	0.59	0.49	0.42	0.35	0.30	0.25	0.21	0.18	0.15	0.13
43	6.1	0.60	0.51	0.44	0.37	0.32	0.27	0.23	0.20	0.17	0.15
44	6.7	0.62	0.53	0.46	0.39	0.34	0.29	0.25	0.22	0.19	0.16
45	7.2	0.64	0.56	0.48	0.42	0.36	0.32	0.28	0.24	0.21	0.18
46	7.8	0.66	0.58	0.50	0.44	0.39	0.34	0.30	0.26	0.23	0.20
47	8.3	0.68	0.60	0.53	0.47	0.42	0.37	0.33	0.29	0.26	0.23
48	8.9	0.70	0.62	0.56	0.50	0.44	0.40	0.36	0.32	0.29	0.26
49	9.4	0.72	0.65	0.59	0.53	0.48	0.42	0.39	0.35	0.32	0.29
50	10.0	0.74	0.68	0.61	0.56	0.51	0.46	0.42	0.39	0.35	0.32
51	10.6	0.77	0.70	0.64	0.59	0.54	0.50	0.46	0.42	0.39	0.36
52	11.1	0.79	0.73	0.68	0.63	0.58	0.54	0.50	0.47	0.43	0.40
53	11.7	0.81	0.76	0.71	0.67	0.62	0.58	0.55	0.51	0.48	0.45
54	12.2	0.84	0.79	0.75	0.70	0.67	0.63	0.60	0.56	0.54	0.51
55	12.8	0.86	0.82	0.78	0.75	0.71	0.68	0.65	0.62	0.59	0.57
56	13.3	0.89	0.86	0.82	0.79	0.76	0.74	0.71	0.68	0.66	0.64
57	13.9	0.92	0.89	0.86	0.84	0.82	0.79	0.77	0.75	0.73	0.71
58	14.4	0.94	0.93	0.91	0.89	0.87	0.86	0.84	0.83	0.81	0.80
59	15.0	0.97	0.95	0.94	0.95	0.94	0.93	0.92	0.91	0.90	0.89
60	15.6	1.00	1.00	1.00	1.00	1.00	1.00	1.00	1.00	1.00	1.00
61	16.1	1.03	1.04	1.05	1.06	1.07	1.08	1.09	1.10	1.11	1.12
62	16.7	1.06	1.08	1.10	1.12	1.14	1.17	1.19	1.21	1.23	1.25
63	17.2	1.09	1.12	1.16	1.19	1.23	1.26	1.30	1.33	1.37	1.40
64	17.8	1.13	1.17	1.22	1.26	1.31	1.36	1.41	1.46	1.52	1.57
65	18.3	1.16	1.22	1.28	1.34	1.40	1.47	1.54	1.61	1.69	1.76
66	18.9	1.19	1.27	1.34	1.42	1.50	1.59	1.68	1.77	1.87	1.97
67	19.4	1.23	1.32	1.41	1.50	1.61	1.71	1.83	1.95	2.08	2.21
68	20.0	1.27	1.37	1.48	1.59	1.72	1.85	1.99	2.14	2.30	2.48
69	20.6	1.30	1.42	1.55	1.69	1.84	2.00	2.17	2.36	2.56	2.77
70	21.1	1.34	1.48	1.63	1.79	1.97	2.16	2.37	2.59	2.84	3.11
71	21.7	1.38	1.54	1.71	1.90	2.10	2.33	2.58	2.85	3.15	3.48
72	22.2	1.43	1.60	1.80	2.01	2.25	2.52	2.81	3.14	3.50	3.90
73	22.8	1.47	1.67	1.89	2.13	2.41	2.72	3.07	3.45	3.88	4.36
74	23.3	1.51	1.73	1.98	2.26	2.58	2.94	3.34	3.80	4.31	4.89
75	23.9	1.56	1.80	2.08	2.40	2.76	3.17	3.64	4.18	4.78	5.47
76	24.4	1.60	1.87	2.18	2.54	2.95	3.43	3.97	4.59	5.31	6.13
77	25.0	1.65	1.65	2.29	2.69	3.16	3.70	4.33	5.05	5.90	6.87
78	25.6	1.70	2.03	2.41	2.85	3.38	4.00	4.72	5.56	6.54	7.69
79	26.1	1.75	2.11	2.53	3.30	3.62	4.32	5.14	6.12	7.26	8.61
80	26.7	1.81	2.19	2.65	3.21	3.87	4.66	5.60	6.73	8.06	9.65
81	27.2	1.86	2.28	2.79	3.40	4.14	5.03	6.11	7.40	8.95	10.8
82	27.8	1.92	2.37	2.93	3.60	4.43	5.44	6.66	8.14	9.93	12.1
83	28.3	1.97	2.46	3.07	3.82	4.74	5.87	7.26	8.95	11.0	13.6
84	28.9	2.03	2.56	3.23	4.05	5.07	6.34	7.91	9.85	12.2	15.2
85	29.4	2.09	2.67	3.39	4.29	5.43	6.85	8.62	10.8	13.6	17.0

*Calculated from the following formula: $TCF=C_{IR}^{(t-60)}$ where C_{IR} is determined in accordance with 2.3.3 and t is the cable temperature in degrees Fahrenheit.

© Copyright 2003 by the National Electrical Manufacturers Association and the Insulated Cable Engineers Association, Incorporated.

Copyright National Electrical Manufacturers Association
Provided by IHS under license with NEMA
No reproduction or networking permitted without license from IHS
Not for Resale

2.4 DISSIPATION FACTOR (DF), CAPACITANCE (C), AND DIELECTRIC CONSTANT

The minimum length of a cable sample for measuring DF and C shall be 15 ft.

C and DF shall be determined at the specified frequency and temperature, using a suitable ac bridge, e.g., a Schering or a Transformer-Ratio-Arm bridge. The measurements shall be made at U_0 (the voltage between conductor and ground of a three-phase system). U_0 is the rated phase to phase voltage divided by the square root of three. The measured capacitance shall be length adjusted to picofarads per ft, using the measured length of cable between electrodes.

The equivalent geometric capacitance (C_0), shall be calculated from the formula:

$$C_0 = \frac{7.354}{\log_{10} \frac{D}{d}}$$

Where:
C_0 = Equivalent geometric capacitance, in picofarads per ft
D = Diameter over insulation, in inches
d = Diameter over conductor stress control layer, when present, or over conductor, in inches

The ratio of the measured capacitance divided by the geometric capacitance (C/C_0) shall be the Dielectric Constant of the sample.

2.5 SUITABILITY OF INSULATION COMPOUNDS FOR USE ON DC CIRCUITS IN WET LOCATIONS

Samples:

a. Test specimen shall have a nominal 14 AWG solid conductor with 0.047 inch (1.2 mm) insulation, or the nominal thickness for the applicable voltage rating, whichever is thinner, (no further coverings) conforming to ICEA dimensional tolerances.

b. Three identical specimens shall be used. The center 10 ft (2.54 m) section of each specimen shall be immersed in water with adequate end sections at least 12 in. (305 mm) long. These three specimens shall be immersed in the same or identical glass containers (bath).

Water Bath: The water bath (test tank) shall be made of glass and maintained at the specified temperature ± 1°C, and shall contain tap water with a pH of 6.0 to 8.0. The water bath shall be connected to ground to serve as the grounded electrode. Only bare copper electrodes shall be used. A suitable cover shall be placed over the water bath and the water maintained at a constant level flush with the surface of the cover.

Test Potential: A negative dc potential of 600 volts shall be applied to the conductors of the three test specimens immediately after immersion and shall be so maintained for the duration of the test except during the measuring intervals. The positive electrode shall be connected to the water bath and ground.

Test Period: Method EM-60 ac measurements in accordance with 2.6 shall be made on each test specimen after a total immersion period of 1 day, 1 week, 2 weeks, and each 2 week period thereafter for a total period of 16 weeks unless sample failure occurs before this period. Immediately previous to the above measurements, a 60 Hz test potential of 5000 volts for 5 minutes is to be applied to each specimen at each measuring interval. The stability factor for each measuring method shall be in accordance with 2.6.

© Copyright 2003 by the National Electrical Manufacturers Association and the Insulated Cable Engineers Association, Incorporated.

Copyright National Electrical Manufacturers Association
Provided by IHS under license with NEMA
No reproduction or networking permitted without license from IHS
Not for Resale

2.6 ACCELERATED WATER ABSORPTION TEST, ELECTRICAL METHOD AT 60 Hz (EM-60)

This test shall be a type test. It shall be performed on insulations or composite insulations that are not in excess of (45 ± 4) mils [(1.1 ± 0.1)mm] thick. The conductor size shall be 4 AWG or smaller. There shall be no nonconducting separator between the conductor and insulation. There shall be no coverings over the insulation(s). The cable sample shall be at least 15 ft (3.81 m) long. The middle 10 ft (2.54 m) of the cable sample shall be immersed in tap water that is maintained at the temperature specified for the insulation or composite insulation being tested for a period of 14 days, keeping not less than 2.5 ft (762 mm) at each end above water as leakage insulation. The test measurements shall be made at the specified test temperature. The water level shall be kept constant.

Capacitance. The capacitance of the insulation shall be determined at an average stress of 80 kV/in (3.2 kV/mm) at approximately 60 Hz after 1, 7, and 14 days immersion. The increase in capacitance from 1 to 14 days and from 7 to 14 days shall be expressed as a percentage of the 1 and 7 day values, respectively. The dissipation factor of the insulation at an average stress of 80 kV/in (3.2 kV/mm) and 40 kV/in (1.6 kV/mm) shall be determined after 1 and 14 days immersion. The dissipation factor shall be expressed to the nearest 0.001.

Stability Factor. The stability factor is 100 times the difference between dissipation factor at 80 kV/in (3.2 kV/mm) and 40 kV/in (1.6 kV/mm) after the test specimen has been immersed in water at the specified test temperature for the specified time. The alternate to the stability factor is the stability factor at the specified time minus stability factor at one day.

Dielectric Constant Calculation. The dielectric constant of the insulation at 60 Hz shall be calculated as follows:

$$Dielectric\ Constant = 13600 C \log_{10} \frac{D}{d}$$

Where:
C = Capacitance in microfarads of the 10 ft (3.05 meter) section.
D = Diameter over the insulation
d = Diameter under the insulation

2.7 DIELECTRIC CONSTANT AND VOLTAGE WITHSTAND FOR NONCONDUCTING STRESS CONTROL LAYERS

The sample shall be a (18 ± 1) inch [(457 ± 25.4) mm] long conductor over which (0.015-0.030) inch [(0.381-0.762)mm] of nonconducting stress control material has been extruded. The central (12 ± 1) inch [(305 ± 25.4) mm] length shall be shielded using a silver-painted electrode or equivalent applied to the stress control layer surface. The dielectric constant of the layer shall be determined at the required temperatures in accordance with 2.4 except that a low voltage 60-Hz capacitance bridge shall be used. Following the dielectric constant determination and while the specimen is kept at the specified temperature, a 60-Hz ac potential shall be applied between the conductor and the grounded shield (painted electrode) with a rate of rise not in excess of 100 volts per second until dielectric failure occurs. The dielectric withstand stress shall be calculated as follows:

$$S = \frac{2V}{D - d}$$

Where:
S = Dielectric withstand stress, in kV per inch
V = Actual breakdown level, in kilovolts
D = Diameter over stress control layer, in inches
d = Diameter under stress control layer, in inches

© Copyright 2003 by the National Electrical Manufacturers Association and the Insulated Cable Engineers Association, Incorporated.

Copyright National Electrical Manufacturers Association
Provided by IHS under license with NEMA
No reproduction or networking permitted without license from IHS
Not for Resale

2.8 SPECIFIC SURFACE RESISTIVITY

A sample of the completed cable of suitable length shall be immersed, except for the ends, in water at room temperature for 48 hours. At the end of this period, the sample shall be removed from the water, blotted, and allowed to remain at room temperature for 10 minutes. Two 1-inch wide foil electrodes spaced 6 in. apart shall be wound around the cable surface that was immersed. A (375±125) volt dc potential shall be applied between the two electrodes and the resistance shall be measured in accordance with ASTM D 257. The specific surface resistivity shall the calculated as follows:

$$P=0.524\ R\ (D)$$

Where:
P = Specific surface resistivity, in megohm
R = Measured resistance in megohm per 6-inch spacing
D =Cable diameter in inches

2.9 U-BEND DISCHARGE RESISTANCE

A sample of the completed cable shall be bent, in the form of a U, 180 degrees around a mandrel having the specified diameter.

The bent sample after removal from the mandrel shall be mounted with the apex of the U above and in contact with a smooth metal plate and with the legs of the U perpendicular to the plate. After not less than 30 minutes nor more than 45 minutes following the bending, a source of 49-61-Hz ac potential at the specified voltage shall be applied between the conductor and the metal plate continuously for the specified time and temperature.

2.10 TRACK RESISTANCE

Track resistance shall be determined in accordance with Method A or Method B.

Method A. The track resistance shall be determined in accordance with ASTM D 2132 modified as followed:

a. Three test specimens of insulated conductor, each 5 ½ in. (140 mm) long, shall be used.

b. Seven electrodes shall be applied to each test specimen, with a ¾ inch (19 mm) minimum space between each electrode. Each electrode shall consist of at least one turn of a 12 AWG coated copper wire wrapped tightly around the specimen.

c. Three test specimens shall be placed horizontally in the test chamber at right angles to the axis of the spray and equidistant from the nozzle. The upper half of each specimen shall be dusted. The dust shall then be removed for approximately a 0.05-inch width immediately adjacent to both sides of the three electrodes that are to be energized.

d. The end electrodes, each alternate electrode and the conductor in each test specimen shall be grounded. A 60-Hz potential shall be applied to the remaining three electrodes of each specimen.

e. The test potential shall be raised to 1500 volts and the fog deposit adjusted to give a current between 4 and 10 milliamperes. Failure occurs when the circuit breaker trips.

NOTE—For further information see IEEE Transactions on Power Apparatus and Systems, Volume 84, 1965, page 815 (paper 31 TP 6), Discharge Resistant Characteristics of Polyethylenes for Wire and Cable by E. K. Duffy, S. Jovanovitch, and I. J. Marwick.

© Copyright 2003 by the National Electrical Manufacturers Association and the Insulated Cable Engineers Association, Incorporated.

Copyright National Electrical Manufacturers Association
Provided by IHS under license with NEMA
No reproduction or networking permitted without license from IHS
Not for Resale

Method B. The track resistance shall be determined in accordance with the following:

a. The test specimen shall be a strip 2 in. (50.8 mm) long and at least 0.060 in. (1.52 mm) thick and shall be taken from the outside of the insulation. The conductor stress control layer shall be removed.

b. An electrode shall be attached near one end of the specimen and to the surface that was the outside surface of the insulation.

c. The specimen shall be immersed in a 0.1 percent solution of ammonium chloride at ground potential until the electrode contacts the surface of the solution and then withdrawn 1 inch (25.4mm) of its immersed length. This procedure shall be repeated four times per minute of a minimum of 10 cycles and a maximum of 50 cycles or until failure occurs. Failure occurs when an arc is maintained for two successive cycles between the electrode and solution across 1 inch (25.4) of specimen.

d. A 60-Hz test potential shall be applied to the electrode attached to the specimen. The tracking voltage is the voltage at which no failures occur on five consecutive test specimens.

NOTE—For further information, see IEEE Transactions on Electrical Insulation, December 1967, Vol. El-2, No. 3, Page 137 (Paper 31 TP66-360), Dip-Track Test by C. F. Wallace and C. A. Bailey.

2.11 VOLUME RESISTIVITY

2.11.1 Conductor Stress Control

The sample shall be cut in half longitudinally and the conductor removed. Four silver-painted electrodes shall be applied to the conductor stress control layer. The two potential electrodes shall be at least 2 in. (50.8 mm) apart. A current electrode shall be placed at least 1 inch (25.4 mm) beyond each potential electrode. Where a high degree of accuracy is not required, the test may be made with only two electrodes spaced at least 2 in. (50.8 mm) apart.

The power of the test circuit shall not exceed 100 milliwatts. The test shall be made at the specified temperature with either ac or dc voltage.

The volume resistivity shall be calculated as follows:

$$\rho = \frac{R\left(D^2 - d^2\right)}{100L}$$

Where:
ρ = Volume Resistivity in ohm-meters.
R = Measured resistance in ohms.
D = Diameter over the conductor stress control layer in inches.
d = Diameter over the conductor in inches.
L = Distance between potential electrodes in inches.

2.11.2 Insulation Shield

Four silver-painted electrodes shall be applied to the insulation shield layer. The two potential electrodes shall be at least 2 in. (50.8mm) apart. A current electrode shall be placed at least 1 inch (25.4 mm) beyond each potential electrode. Where a high degree of accuracy is not required, the test may be made with only two electrodes spaced at least 2 in. (50.8 mm) apart.

The power of the test circuit shall not exceed 100 milliwatts. The test shall be made at the specified temperature with either ac or dc voltage.

© Copyright 2003 by the National Electrical Manufacturers Association and the Insulated Cable Engineers Association, Incorporated.

Copyright National Electrical Manufacturers Association
Provided by IHS under license with NEMA
No reproduction or networking permitted without license from IHS
Not for Resale

The volume resistivity shall be calculated as follows:

$$\rho = \frac{2R\left(D^2 - d^2\right)}{100L}$$

Where:
ρ = Volume Resistivity in ohm-meters.
R = Measured resistance in ohms.
D = Diameter over the insulation shield layer in inches.
d = Diameter over the insulation in inches.
L = Distance between potential electrodes in inches.

2.12 SEMICONDUCTING JACKET RADIAL RESISTIVITY TEST

This procedure is designed for testing short samples of cable having semiconducting jackets in contact with the metallic shield. The resistance of the jacket is obtained from measuring the voltage drop across the sample at room temperature. This is created by passing a constant dc or 60 Hz ac current through the sample in a radial direction. The apparent resistivity of the jacket is calculated from the electrical measurement and geometry of the cable.

2.12.1 Sample Preparation

A sample of cable at least 6 in. (150 mm) long will be prepared as shown in Figure 2-1. The metallic shield forms one measuring electrode and a 2-inch (50.8 mm) band of conducting paint covering the surface of the jacket provides the second measuring electrode. Two separate bands of conducting paint ½ inch (13 mm) wide and covering the surface of the jacket form the guard electrodes. The bands are separated approximately 1/8 inch (3.2 mm) from the measuring electrode.

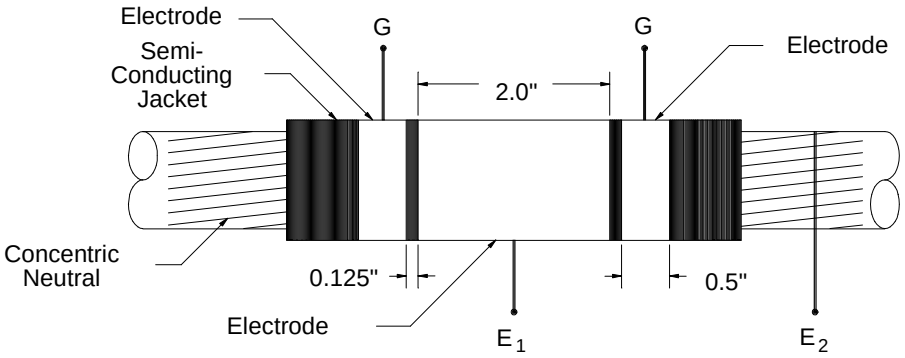

Figure 2-1
SAMPLE PREPARATION FOR RADIAL RESISTIVITY MEASUREMENT OF SEMI-CONDUCTING JACKETS

Legend:
- E_1 - Measuring electrode, conducting paint on the surface of the jacket
- E_2 - Measuring electrode, metallic tape shield, lead sheath or wires tied together
- G - Guard electrode, conducting paint on the surface of the jacket

The sample shall be tested in air at room temperature.

© Copyright 2003 by the National Electrical Manufacturers Association and the Insulated Cable Engineers Association, Incorporated.

Copyright National Electrical Manufacturers Association
Provided by IHS under license with NEMA
No reproduction or networking permitted without license from IHS
Not for Resale

2.12.2 Test Equipment Setup

The equipment needed to perform the test consists of two high input impedance (>1 megohm) voltmeters, an ammeter, an adjustable resistor and an adjustable voltage dc or 60 Hz ac power supply. The measuring circuit is connected as shown in Figure 2-2.

Adjustable resistor R_c is used to control the potential of the guard electrodes to the same value as E_1. This is done to prevent surface current from affecting the measurement. As it is adjusted, the measured voltage V_1 may go through a minimum point. The voltage V_2 and current measurements shall be made with R_c adjusted such that V_1 is as close to zero as possible.

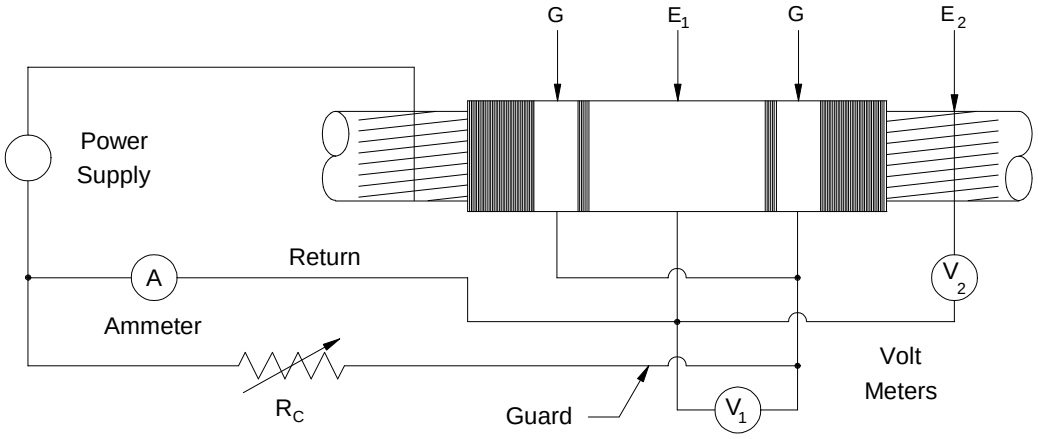

Figure 2-2
CIRCUIT FOR RADIAL RESISTIVITY MEASUREMENT OF SEMI-CONDUCTING JACKETS

Legend: E_1, E_2 and G are the same notations used in Figure 2-1.

2.12.3 Calculation

Calculate the resistance R of the cable jacket from the measurements of voltage V_2 and current obtained using the circuit in Figure 2-2 ($R = V_2/I$). Using the value R and the appropriate dimensions of the cable sample, calculate the apparent resistivity as follows:

$$\rho_v = \frac{R \times 2\pi \times L}{\ln\left(\frac{D}{d}\right)}$$

Where:

ρ_v = apparent resistivity in ohm-meters
R = calculated resistance in ohms
L = electrode length in meters
D = diameter over the semiconducting jacket in mm
d = pitch diameter* of the wires with out separator tape or mean diameter of corrugated tape or corrugated sheath or the diameter over the separator tape, smooth metallic sheath or flat tape in mm.

*The pitch diameter d is measured from center to center of two concentric wires which are diametrically opposite from each other.

© Copyright 2003 by the National Electrical Manufacturers Association and the Insulated Cable Engineers Association, Incorporated.

Copyright National Electrical Manufacturers Association
Provided by IHS under license with NEMA
No reproduction or networking permitted without license from IHS
Not for Resale

2.13 DRY ELECTRICAL TEST FOR EPR CLASS III INSULATION (SHIELDED MEDIUM VOLTAGE ONLY)

2.13.1 Test Samples

At least three samples shall be tested. A sample shall consist of a 1/0 AWG Aluminum or Copper 15kV cable utilizing a 100% insulation level (nominal 175 mil)wall thickness along with a conductor shield and an outer insulation shield with any suitable metallic shield. The samples shall be 30 ft (9.1 m) long.

2.13.2 Test Procedure

The test shall be performed with the sample cable in a 3 inch (76 mm) nominal diameter polyethylene or PVC conduit [(minimum 15 ft) (4.5 m)]. The effective length between terminals shall be at least 20 ft (6.1 m). The sample shall be current loaded at 140 °C at rated phase-to-ground voltage for three weeks continuously. The loading may be interrupted, if necessary, for equipment or sample maintenance provided the total time is achieved.

2.13.3 Electrical Measurements

The capacitance and dissipation factor shall be measured initially at room temperature, 105 °C and 140 °C. After the test has been completed, the same properties shall be measured at the three temperatures and recorded.

The partial discharge shall be measured and recorded on the initial specimens and after the current loading test has been completed.

2.14 DISCHARGE RESISTANCE TEST FOR EPR CLASS IV INSULATION ONLY

The test shall be performed in accordance with ASTM D 2275 using the following standard specimens and conditions.

2.14.1 Test Specimens

From each test sample, three test specimens, each having a minimum diameter of 4 in. (101.6 mm) and a thickness of (0.060 ± 0.004) inch [(1.52 ± 0.1) mm], shall be molded and suitably cured. The prepared specimens shall be held for a minimum of 72 hours at room temperature followed by 16 hours minimum in the same environment as the electrical discharge test.

2.14.2 Test Environment

The discharge test shall be performed in an area provided with a controlled-draft flow of conditioned air to maintain the required relative humidity and temperature and with suitable venting to remove ozone and other gasses.

2.14.3 Test Electrodes

The electrodes shall be of stainless steel Type 309 or 310, with a surface finish of 16 µin (0.406 µm). Each upper electrode, to which the test voltage is applied, shall be a cylindrical rod having a diameter of (0.250 ± 0.010) inch [(6.35 ± 0.254) mm] and a length adjusted to provide a contact weight of (30 ± 3) grams when positioned vertically atop the center of the insulation specimen. The contacting end shall be flat except for edges rounded to a radius of (0.035 ± 0.005) in. [(0.89 ± 0.127) mm]. The lower electrode(s) shall be electrically grounded and may be either (1) a common plate under, and extending at least 2 in. (50.8 mm) beyond, the array of upper electrodes or (2) individual flat discs of 1.25 in. (31.75 mm) minimum diameter, centered under each upper electrode.

© Copyright 2003 by the National Electrical Manufacturers Association and the Insulated Cable Engineers Association, Incorporated.

Copyright National Electrical Manufacturers Association
Provided by IHS under license with NEMA
No reproduction or networking permitted without license from IHS
Not for Resale

2.15 DISSIPATION FACTOR CHARACTERIZATION TEST

2.15.1 Test Samples

Samples for this test shall be rated 15 kV with a 100% insulation level nominal wall thickness of 0.175 in. (4.45 mm). They shall have a #1/0 AWG compressed, Class B, stranded aluminum or copper conductor and be unjacketed with a metallic shield.

2.15.2 Thermal Conditioning

Conditioning may be accomplished using an air oven or by circulating current in the conductor. If an oven is used, the sample shall be placed in the oven for 72 hours at a temperature of 75 °C. If conductor current is used, ac current shall be applied or induced to obtain a conductor temperature of 90 °C for 72 hours. The sample shall be supported in air (no conduit and not lying on the floor), with no test voltage applied. Alternatively, conditioning may consist of the 14 day cycling aging test as defined in 2.19.

The sample selected for this test shall have a minimum active length of 20 ft (6.1 m) with sufficient additional length to apply terminations.

2.15.3 Dissipation Factor Testing

The dissipation factor of the sample shall be measured at the rated phase to ground voltage using the following sequence of conductor temperatures:

a. Rated emergency temperature of the insulation.
b. Room Temperature

The conductor temperature shall be achieved by inducing ac current in the conductor. The sample shall be supported in air (no conduit and not lying on the floor). The dissipation factor shall be measured after the temperature has stabilized at the required temperature. The time to elevated temperature should be minimized.

2.16 HIGH VOLTAGE TIME TEST

The voltage test frequency shall be 49-61 Hz. The test shall be performed with the cable at room temperature. Test samples shall have a minimum active length of 15 ft (4.5 m) or as otherwise specified. A test voltage equal to 100 V/mil (3.9 kV/mm) shall be applied held for a period of 5 minutes. The voltage shall then be increased in 40 V/mil (1.6 kV/mm) steps and held for 5 minutes at each value, continuing to cable breakdown. The V/mil (kV/mm) stress is calculated based on the nominal specified thickness.

The results of each cable test, cable failure dissection, wall thickness at failure site, and examination should also be recorded and reported.

When testing samples removed from the accelerated water treeing test, the HVTT should be performed within 24 hours after the termination of the treeing test. The water in the conductor shall not be drained before the HVTT is performed. If the test is not performed within 24 hours of completing the water treeing test, the samples shall be stored in water with the same characteristics as the water used during the test until the HVTT can be completed.

If a termination failure occurs, the test shall be considered finished only if the 1100 V/mil (43.3 Kv/mm) step has been completed. A termination failure is defined as a failure outside of the active length.

If a terminal failure occurs and the 1100 V/mil (43.3 kV/mm) step has not been completed, the sample may be reterminated and retested. To retest, the sample shall have a minimum shielded length of 10 ft (3.1 m) after reterminating. The voltage shall be reapplied starting at 100 V/mil (3.9 kV/mm) for 30 seconds. It shall be increased in 40 V/mil (1.6 kV/mm) steps and held for 30 seconds at each step, continuing to the step at

© Copyright 2003 by the National Electrical Manufacturers Association and the Insulated Cable Engineers Association, Incorporated.

Copyright National Electrical Manufacturers Association
Provided by IHS under license with NEMA
No reproduction or networking permitted without license from IHS
Not for Resale

which the terminal failure occurred. The voltage shall be held for 5 minutes at this step and then increased in 40 V/mil (1.6 kV/mm) steps and held for 5 minutes at each step until breakdown occurs.

2.17 HOT IMPULSE TEST

A hot impulse test shall be made in accordance with IEEE Specification No. 82, "Test Procedure for Impulse Voltage Tests on Insulated Conductors". The minimum active length is 8 ft (2.4 m). Hot impulse tests shall be made with the sample placed in a 3 in. (76.2 mm) nominal diameter polyethylene or PVC conduit with a minimum length of 6 ft (1.8 m). The conduit ends shall be closed to prevent air circulation into or out of the conduit.

For hot impulse tests, the temperature of the conductor shall be equal to the rated emergency overload temperature of the cable +0/-5 °C. The temperature shall be achieved by circulating current in the conductor with no current in the metallic shield.

Ten impulses of each polarity with magnitude equal to the BIL (110 kV) shall be applied. The voltage shall then be raised over the BIL values listed in steps of approximately 25% of BIL with three impulses of negative polarity applied at each step and continuing to cable breakdown outside the terminals.

Impulse breakdown sites shall be dissected and the results shall be recorded and reported.

2.18 CYCLIC AGING

Cyclic aging is conducted to provide thermal conditioning to remove a large amount of the volatiles found in freshly manufactured cable.

2.18.1 Test Samples

Sufficient sample length is required to provide aged cable for other tests to be completed. Samples for this test shall be rated 15 kV with a 100% insulation level nominal wall thickness of 0.175 in.. (4.45 mm). They shall have a #1/0 AWG compressed, Class B, unblocked, stranded aluminum or copper conductor. They shall be unjacketed with a concentric wire neutral.

2.18.2 Sample Preparation

Prior to the application of current, the overall jacket, if any, shall be removed. A minimum of seven days must pass from the time the cable is insulated until these tests are performed.

2.18.3 Conduit

The cable shall be installed in a 3 inch (76.2 mm) nominal diameter polyethylene or PVC conduit with ends closed to prevent air from escaping or entering the conduit. The conduit may be smooth or corrugated. Elevated conductor temperatures are achieved by circulating ac current in the conductor with no current in the metallic shield.

2.18.4 Load Cycle

The cable shall be subjected to 14 thermal load cycles. A load cycle is defined as a 24 hour period during which the current is on for the first 8 hours and off for the remaining 16 hours. The conductor temperature inside the conduit shall be equal to the rated emergency overload temperature of the cable during the last 4 hours of the current on period. During the current-off period, the cable conductor shall fall to within 5 °C of the ambient temperature. No voltage is applied during the load cycle. Temperatures shall be established before the test is performed by placing a thermocouple on the conductor of a "dummy" cable which is load cycled in a manner similar to a test sample.

2.19 ACCELERATED WATER TREEING TEST (AWTT)

2.19.1 General

The cable conditioned in 2.18 is used for this test. Each cable is aged at the test voltage with the cable placed in a tap water filled, 3 inch (76.2 mm) nominal diameter polyethylene or PVC conduit and with the conductor interstices filled with tap water throughout the test.

© Copyright 2003 by the National Electrical Manufacturers Association and the Insulated Cable Engineers Association, Incorporated.

Copyright National Electrical Manufacturers Association
Provided by IHS under license with NEMA
No reproduction or networking permitted without license from IHS
Not for Resale

2.19.2 Sample Preparation

Sufficient cable shall be aged to perform tests. Each sample on test shall have a minimum metallic shielded length of 12 ft (3.7 m) inside the water-filled conduit plus enough cable to provide for sufficient test terminations. The aging test may be conducted with individual samples or in one continuous length which is subsequently cut into individual samples.

2.19.3 Aging Time

Three samples are aged for 120 days then subjected to a High Voltage Time Test (HVTT) (2.17). Three samples are aged for 180 days and subjected to a HVTT. Three samples are aged for 360 days and subjected to a HVTT.

2.19.4 Test Procedure

The aging parameters for the accelerated water treeing test are outlined as follows:

Test Voltage:

(150 ± 5) V/mil [(5.9 ± 0.2) kV/mm] average stress, based on the nominal thickness of 0.175 in. (4.45 mm).

Test Frequency:

49-61 Hz (report nominal frequency utilized)

Test Cycle:

The cables shall age with voltage applied continuously 7 days a week (except during equipment or sample maintenance). During each week, the cables shall experience 5 consecutive 24 hour load cycle periods followed by 2 consecutive non-load cycle periods.

Dummy Load Cycle:

To establish the 24 hour temperature profile for the 5 consecutive load cycle periods, a sample of dummy cable shall be installed in a conduit exactly as it will be installed in the aging test. To monitor the temperature of the sample, thermocouples shall be placed on the conductor in air, on the conductor in water (near the center of the conduit) and on the insulation shield in water (also near the center of the conduit). Current shall be induced in the conductor for 8 hours followed by 16 hours with no current (one load cycle period). No voltage is applied to the dummy cable. The current magnitude shall be sufficient to achieve an in-water insulation shield temperature of (45 ± 3) °C by the end of the current-on period. To achieve the required in-water insulation shield temperature requirements may require the use of a thin blanket of thermal insulation around the conduit. The 24 hour time-temperature profile for the conductor in air and water and the insulation shield in water shall be reported graphically in the qualification test report. The 24 hour load cycle temperature profile for the insulation shield in water shall be followed during the cable aging load cycle.

Aging Load Cycle:

Thermocouples shall be attached to the in-water insulation shield of several samples (near the center of the conduit) to verify that the cables achieve the correct temperature. Conductor current shall be induced 8 hours on and 16 hours off (one load cycle period) for 5 consecutive days a week. During each load cycle, the in-water insulation shield temperature profile established for the dummy cable shall be followed. Generally, the current magnitude established during the dummy cable test is used during the aging test. However, the conductor current may be adjusted to achieve the correct temperature if the thermal environment of the test facility changes during the test. The current shall be off for 2 consecutive

© Copyright 2003 by the National Electrical Manufacturers Association and the Insulated Cable Engineers Association, Incorporated.

Copyright National Electrical Manufacturers Association
Provided by IHS under license with NEMA
No reproduction or networking permitted without license from IHS
Not for Resale

days during each week. Voltage shall be applied continuously (7 days a week) during the aging period except when replenishing water in the conductor or the conduit or for general maintenance. One day of aging equals 24 hours of continuous voltage application if the temperature requirements are met and the voltage is within the specified limits. If the temperature or voltage falls below the specified value during a 24 hour test period (load cycle or non-load cycle), that period shall be repeated. The test may be interrupted between load cycles for equipment or sample maintenance.

2.19.5 Water pH

The pH of the water in the conduit shall be measured at 0, 120, and 360 days of aging

2.20 THERMOMECHANICAL QUALIFICATION TEST - Optional for Jacketed Cable Only

2.20.1 Procedure

2.20.1.1 Fixture

A 3-inch (76.2 mm) nominal diameter conduit shall be used for cables up to 1.5 in. (38.1 mm) in diameter, and a 4 inch (101.6 mm) nominal diameter conduit shall be used for cables larger than 1.5 in. (38.1 mm) in diameter. The test fixture shall consist of two pieces of conduit, each 15 ft (4.6 m) long, joined together at one end by a U-bend with a radius of 13 in. (330 mm) for the 3 inch (76.2 mm) nominal conduit and a radius of 16 in. (406 mm) for the 4 inch (101.6 mm) nominal conduit.

2.20.1.2 Load Cycling

The cable shall be subjected to 14 load cycles. Each load cycle is defined as a 24 hour time span with a current-on period and a current-off period. During the current-on period, sufficient alternating current shall be passed through the conductor to achieve a cable conductor temperature equal to the rated emergency overload temperature +0/-5 °C for a period of 6 hours. There shall be no current in the cable metallic shield. Voltage on the conductor is not required during load cycling. When the conductor is at the required temperature, the maximum temperature gradient shall be within 40 °C for insulation wall thickness of 345 mils or greater and 30 °C for an insulation wall thickness less than 345 mils. The reference location for all conductor temperature requirements is the longitudinal center of the cable inside the conduit (In center of U-bend). These temperatures shall be established before the test is performed by placing a thermocouple on the conductor of a "dummy" cable which is load cycled in a manner similar to a test sample.

During the current-off period, the cable conductor temperature should drop to within 5 °C of the ambient air temperature. If this condition cannot be met, the test shall be interrupted at the end of the fifth and tenth cycle. During this interruption, the current shall remain off for a period of at least 24 hours to allow the cables to cool to ambient temperature. The load cycle shall be resumed at the end of the interruption period. This interrupted procedure may also be followed even if the temperature drop requirement during the current-off period can be met.

The test specimens must complete 14 load cycles. The 24 hour interruption periods are not considered part of a load cycle.

If, for any reason, the temperature falls below the specified level during any given load cycle, that load cycle must be repeated. Load cycles may be contiguous or there may be periods with no current between load cycle to accommodate schedule variations or equipment failures or maintenance.

© Copyright 2003 by the National Electrical Manufacturers Association and the Insulated Cable Engineers Association, Incorporated.

Copyright National Electrical Manufacturers Association
Provided by IHS under license with NEMA
No reproduction or networking permitted without license from IHS
Not for Resale

Section 3
DIMENSIONAL METHODS

3.1 CONDUCTOR CROSS-SECTIONAL AREA BY DIAMETER MEASUREMENTS

The cross-sectional area of a conductor shall be calculated as follows:

$$A = 10^{-3} \sum_{i=1}^{n} d_i^2$$

Where:

A = Cross-section in kcmil

d_i = Diameter of the ith wire in 0.001 inch units (mils) determined according to the micrometer method for conductor diameter

n = Total number of wires in conductor When n = 1, the average of three measurements of diameter shall be used for d.

3.2 THICKNESS OF COMPONENTS OVER A CONDUCTOR

When a thickness measurement is required, it shall be made by one of the following methods:

3.2.1 Optical Measuring Device Method for Any Component

The thickness of any component may be determined with an optical measuring device graduated with at least 0.001-inch divisions. The specimen shall be cut perpendicular to the axis of the sample so as to expose the full cross-section. The average of the minimum and maximum thickness shall be taken as the average thickness, unless otherwise specified.

3.2.2 Micrometer Method for Unbonded Components

The thickness of an unbonded component may be determined with a micrometer graduated with at least 0.001-inch divisions.

3.2.3 Extruded Insulation or Insulation Shield or Jacket

Thickness shall be the minimum or maximum point thickness or average thickness of the material, as required.

3.2.4 Tape

Thickness shall be the average of five readings taken at different points of the tape after removal of the tape from at least 6 in. of the cable. The micrometer shall be designed for the tape type as follows:

3.2.4.1 Polymeric Tapes

Shall be measured with a presser foot (0.25 ± 0.01) inch [(6.35 ± 0.254) mm] in diameter and exerting a total force of 85 ± 3 grams, the load being applied by means of a weight.

3.2.4.2 Metallic Tapes

Shall be measured with a micrometer having flat surfaces on both the anvil and the end of spindle. The sample shall be taken from at least 6 in. of core or cable.

3.2.5 Sheath

Thickness shall be the average of 10 measurements, five of which were made approximately equally spaced around the circumference of a sample [at least 3 in. (76.2 mm) long] cut perpendicular to the cable axis at one end of the cable length, the other five being made similarly on a sample from the other end.

© Copyright 2003 by the National Electrical Manufacturers Association and the Insulated Cable Engineers Association, Incorporated.

Copyright National Electrical Manufacturers Association
Provided by IHS under license with NEMA
No reproduction or networking permitted without license from IHS
Not for Resale

3.2.6 Bedding and Servings

The thickness of bedding and serving shall be determined by the use of a diameter tape and shall be considered as ½ of the difference between the measurements under and over the bedding or serving. The measurement in each case shall be the average of five readings taken at different points along the cable.

3.3 DIAMETER OVER CABLE COMPONENTS

3.3.1 Micrometer Method for Conductors

Diameter measurements shall be made with a micrometer or other suitable instrument graduated with at least 0.0001-in. divisions. Measurements shall be taken around the circumference of the conductor perpendicular to the axis of the conductor and on the extensions of a line through the center of the conductor and through the center of two wires, which are 180 degrees apart, in the outer layer. The average of three measurements taken 120 degrees apart shall be taken as the diameter.

Exception: For solid conductors, the diameter measurements shall be made at each end of the sample and one near the middle of the sample. The average of the three measurements shall be taken as the diameter.

3.3.2 Method for Any Component Except Conductors

When a diameter measurement is required, it shall be made by one of the following methods.

3.3.2.1 Micrometer Method

Diameter measurements shall be made with a micrometer or other suitable instrument graduated with at least 0.001-in. divisions. Measurements shall be taken around the circumference of the component perpendicular to the axis of the component and on the extensions of a line through the center of the component. The average of three measurements taken 120 degrees apart shall be taken as the diameter.

3.3.2.2 Optical Measuring Device Method

The diameter over any component may be determined with an optical measuring device graduated with at least 0.001-inch divisions. The specimen shall be cut perpendicular to the axis of the sample so as to expose the full cross-section.

3.3.3 Tape Method for Any Component Having a Diameter 0.750 inch (19.1 mm) or Greater

A diameter tape graduated with at least 0.01-in. divisions shall be wrapped one turn (360°) around the circumference of the component, tightly and perpendicular to the axis of the component. The average diameter of the component shall be read directly from the diameter tape.

3.4 Protrusion, Indentation and Irregularity measurement

To measure the size of protrusions, indentations and conductor shield irregularities in wafers, the wafers shall be viewed in an optical comparator or similar device which displays the wafer so that a straight edge can be used to facilitate the measurement or may be accomplished through digital imaging and computer programming. Protrusion and indentations shall be measured as shown in Figure 3-1. Conductor shield irregularities shall be measured as shown in Figure 3-2. This procedure is used on cable wafers with the conductor, jacket and metallic shield removed.

© Copyright 2003 by the National Electrical Manufacturers Association and the Insulated Cable Engineers Association, Incorporated.

Copyright National Electrical Manufacturers Association
Provided by IHS under license with NEMA
No reproduction or networking permitted without license from IHS
Not for Resale

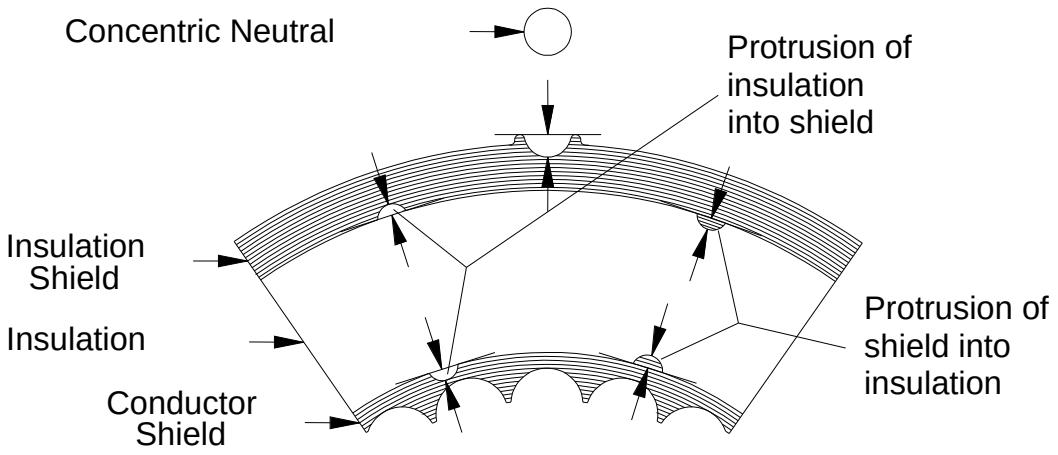

Figure 3-1
PROCEDURE TO MEASURE PROTRUSIONS AND INDENTATIONS

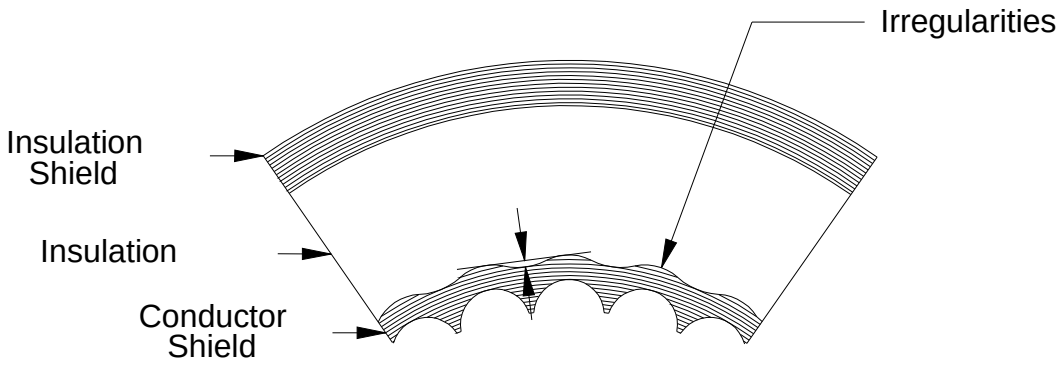

Figure 3-2
PROCEDURE TO MEASURE IRREGULARITIES

© Copyright 2003 by the National Electrical Manufacturers Association and the Insulated Cable Engineers Association, Incorporated.

Copyright National Electrical Manufacturers Association
Provided by IHS under license with NEMA
No reproduction or networking permitted without license from IHS
Not for Resale

Section 4
PHYSICAL METHODS

4.1 ADHESION (STRIPPING FORCE)

From cable samples approximately 15 in. (381 mm) long, remove all coverings over the insulation shield.

Starting at one end of the sample, two parallel longitudinal cuts 1/2 inch (12.7 mm) apart and not less than 12 in. (305 mm) long shall be made through the insulation shield. The specimen shall be rotated 180 degrees, and two identical cuts shall be made starting from the same end. Each 1/2 inch (12.7 mm) strip shall be peeled back from the cut end for a distance of 2 in. (50.8 mm).

The specimen shall be held securely at each end. The 2-inch (50.8 mm) end of the peeled strip shall be gripped in such a manner that it can be pulled at an angle of 90 degrees to the cable axis.

Each strip shall be peeled from the cable at approximately 1/2 inch per second for a distance of not less than 10 in. (254 mm). The angle of pull shall be maintained as close to 90 degrees as possible throughout the test.

The force necessary to remove the strip shall be monitored continuously, and the minimum and maximum value shall be recorded.

4.2 COLD BEND

To determine compliance with a cold bend withstand requirement, a sample of completed cable of the specified length shall be subjected to the specified temperature for 1 hour and then bent 180 degrees around a mandrel of the specified diameter immediately upon its removal from the cooling chamber. The bend shall be made at a uniform rate, and the time required to remove the sample from the cooling chamber and complete the test shall not exceed 1 minute.

4.3 HEAT DEFORMATION (DISTORTION)

4.3.1 Insulation Deformation

4.3.1.1 Test Specimens

a. Insulated Conductors 4/0 AWG and smaller. The initial diameter of a 1 inch long specimen of the insulated conductor shall be measured with a micrometer caliper having a flat surface on both the anvil and spindle. The diameter of the uninsulated conductor shall be measured also. The thickness, T_1, shall be calculated as follows:

$$T_1 = \frac{D - C}{2}$$

Where:

T_1 = Thickness prior to the heat distortion test.
D = Initial diameter of the insulated conductor.
C = Diameter of the uninsulated conductor.

b. Insulated Conductors larger than 4/0 AWG. A sample of insulation approximately 8 in. (203 mm) long shall be prepared to have a thickness of (0.05 ±0.01) in. [(1.27 ±0.254) mm] and smooth surfaces. From this sample, test specimens 1 inch (25.4 mm) long and (9/16 ±1/16) in. [(14.3 ± 1.6)mm] wide shall be prepared. The thickness of the specimen, T_1, shall be

© Copyright 2003 by the National Electrical Manufacturers Association and the Insulated Cable Engineers Association, Incorporated.

Copyright National Electrical Manufacturers Association
Provided by IHS under license with NEMA
No reproduction or networking permitted without license from IHS
Not for Resale

measured with a Randall & Stickney, or equivalent, gauge having a 3/8-inch (9.5 mm) diameter foot with no loading other than the 85 grams of the gauge.

4.3.1.2 Test Procedure

The following steps shall be completed in 3 hours. A Randall & Stickney, or equivalent, gauge with a load as indicated in Table 4-1 on the foot, shall be placed in an oven that is preheated to the specified temperature. At the end of 1 hour, the test specimen shall be placed in the oven, and both the gauge and the test specimen shall remain in the oven for 1 hour. At the end of this 1 hour period, the specimen shall be placed directly under the foot of the gauge and allowed to remain in the oven under load for 1 hour at the specified temperature.

At the end of this period, the dial of the gauge shall be read for one of the following:

a. *The value of F for insulated conductors 4/0 AWG and smaller.* The thickness, T_2, shall then be calculated as follows:

$$T_2 = \frac{F - C}{2}$$

Where:
T_2 = Thickness after the heat distortion test.
F = Final outside diameter as read from the gauge.
C = Diameter of the uninsulated conductor.

b. *The value of T_2 for insulated conductors larger than 4/0 AWG.*

4.3.1.3 Calculation of Deformation

The deformation shall be calculated as follows:

$$Deformation\ Percent = 100\,\frac{T_1 - T_2}{T_1}$$

Table 4-1
LOAD VS. CONDUCTOR SIZE IN HEAT DEFORMATION TEST

Conductor Size (AWG)	Gross Load on Gauge (grams)
22-20	150
19-18	300
16	400
14-8	500
6-1	750
1/0-4/0	1000
Smoothed Samples from Conductors Larger than 4/0	2000

© Copyright 2003 by the National Electrical Manufacturers Association and the Insulated Cable Engineers Association, Incorporated.

Copyright National Electrical Manufacturers Association
Provided by IHS under license with NEMA
No reproduction or networking permitted without license from IHS
Not for Resale

4.3.2 Deformation of Jackets, Insulating and Conducting

4.3.2.1 Test Specimen

A sample of the jacket, either insulating or conducting (including materials used as jacket and insulation shield) approximately 8 in. (203 mm) long shall be prepared to have a thickness of (0.05 ± 0.01) inch [(1.27 ±0.254) mm] and smooth surfaces. From this sample, test specimens 1 inch (25.4 mm) long and 9/16 inch (14.3 mm) wide shall be prepared.

Where the diameter of the cable does not permit the preparation of a specimen 9/16 inch (14.3 mm) wide, a molded sheet of the same compound may be used.

The thickness of the specimen, T_1, shall be measured at room temperature with a Randall & Stickney, or equivalent, gauge having a 3/8 in. (9.5 mm) diameter foot with no loading other than the 85 grams of the gauge.

4.3.2.2 Test Procedure

The following steps shall be completed in three hours.

The Randall & Stickney, or equivalent, gauge with a load of 2000 grams on the foot shall be placed in an oven which is preheated to the specified temperature. At the end of 1 hour, the test specimen shall be placed in the oven, and both the gauge and the test specimen shall remain in the oven for 1 hour. At the end of this 1-hour period, the specimen shall be placed directly under the foot of the gauge and allowed to remain in the oven under the load for 1 hour at the specified temperature. At the end of this period, the thickness, T_2, shall be read on the dial of the gauge.

4.3.2.3 Calculation of Deformation

The deformation shall be calculated as follows:

$$Deformation\ percent = 100\,\frac{T_1 - T_2}{T_1}$$

4.4 FLEXIBILITY TEST FOR INTERLOCKED ARMOR

A suitable length of armored cable shall be bent 180° around the specified mandrel with sufficient tension so it conforms closely to the periphery of the cylinder. While the sample is in this position the armor shall be examined for openings, splits, and cracks. The sample is then straightened, the armor removed, and the conductor assembly examined for damage.

4.5 TEAR RESISTANCE

Each specimen shall be cut with a sharp knife or die. After irregularities, corrugations, and reinforcing cords or wires have been removed, each test specimen shall be not more than 0.150 inch (3.81 mm) and not less than 0.040 inch (1.02 mm) thick. Specimens shall be cut longitudinally with a new razor blade to a point 0.150 inch (3.81 mm) from the wider end.

The two halves of the split end of the test specimen shall be placed in the jaws of the testing machine and the jaws separated at the rate of (20 ±2) inches [(508 ± 50.8) mm] per minute. The tear resistance shall be determined by dividing the load in pounds required to tear the section by the thickness of the test specimen in inches.

© Copyright 2003 by the National Electrical Manufacturers Association and the Insulated Cable Engineers Association, Incorporated.

Copyright National Electrical Manufacturers Association
Provided by IHS under license with NEMA
No reproduction or networking permitted without license from IHS
Not for Resale

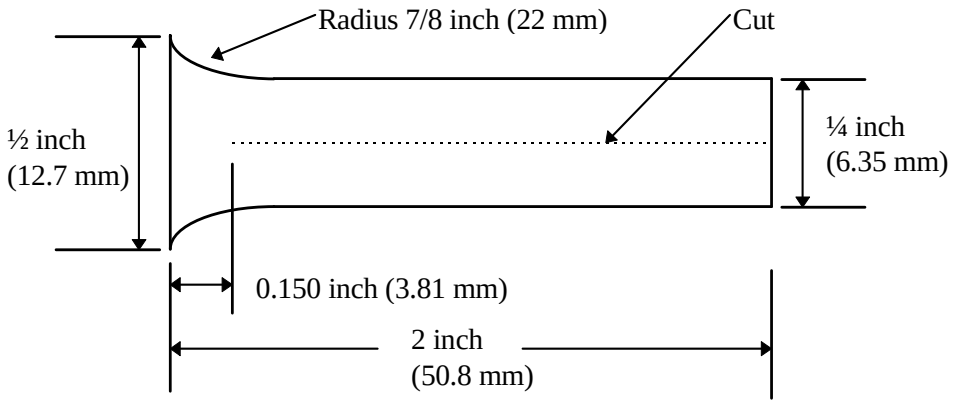

Figure 4-1
TEST SPECIMEN FOR TEAR TEST

4.6 GRAVIMETRIC WATER ABSORPTION

The sample of polymeric material to be tested shall be in the form of a covered wire (weighing less than 100 grams), or a covering removed from a wire and smoothed, or a pressed slab.

The surface of the sample shall be cleaned by scrubbing with a lintless cloth moistened with water, dried for 48 hours in a vacuum of 5 mm of mercury or less over calcium chloride at (70±2) °C, and then weighed to the nearest milligram, Weight A.

The surface area, S, shall be the number of square in. immersed in water in a 10 in (254 mm) length of a covered wire or the total area in square in. immersed in water of other samples.

A covered wire sample shall be bent in the shape of a U around a mandrel having a diameter not less than three times the diameter of the sample. The ends shall be inserted in tightly fitting holes in the cover of a 16-oz (liquid) jar so that 10 in. (254 mm) of the sample will be immersed when the jar is completely filled with water and the cover applied.

A covering removed from a wire or a pressed slab shall be completely immersed.

Using freshly boiled distilled water, which has been cooled and maintained to the specified temperature ± 1 °C, immerse the sample for 168 hours. The level of the water shall be maintained flush with the undersurface of the cover during the soaking period. After 168 hours, the water shall be cooled to room temperature. The sample shall be removed and the adhering water shaken off. It shall be blotted lightly with lintless cloth and weighed within 3 minutes to the nearest milligram, Weight B.

The sample shall be dried in a vacuum of 5 mm of mercury or less over calcium chloride at (70±2) °C for 48 hours and then weighed to the nearest milligram, Weight C.

© Copyright 2003 by the National Electrical Manufacturers Association and the Insulated Cable Engineers Association, Incorporated.

Copyright National Electrical Manufacturers Association
Provided by IHS under license with NEMA
No reproduction or networking permitted without license from IHS
Not for Resale

The water absorption shall be calculated in terms of milligrams per square inch of surface as follows:

$$Water\ Absorption\ (if\ C\ is\ less\ than\ A) = \frac{B - C}{S}$$

$$Water\ Absorption\ (if\ C\ is\ greater\ than\ A) = \frac{B - A}{S}$$

Where:

A = Weight of the sample in milligrams before immersion.
B = Weight of the sample in milligrams after immersion.
C = Weight of the sample in milligrams after drying in vacuum.
S = Total immersed area in square in. of the sample.

4.7 DIRECTION AND LENGTH OF LAY

Direction of lay - The direction of lay shall be determined visually. When looking along the axis of a conductor, member or cable assembly, a right-hand lay recedes from the observer in clockwise rotation; left-hand recedes in a counterclockwise rotation.

Length of lay - The lay length shall be determined by measuring the axial length of one turn of the helix of a wire, or member of an assembly. The lay length shall be measured using a straight specimen or section with any suitable scale or instrument to an accuracy of 0.1 inch (2.54 mm) or better.

4.8 JACKET IRREGULARITY INSPECTION

Three methods for jacket irregularity inspection are indicated in Table 4-2. The equipment for Method A is human sight, with the procedure at the discretion of the organization doing the inspection.

The equipment and procedure for methods B and C shall be in accordance with 2.2.4, Spark Testing.

Methods B and C are appropriate only when a metallic component, suitable for the spark test ground (earth) connection, is present under the jacket.

Table 4-2
JACKET IRREGULARITY INSPECTION

Thickness of Jacket		Method A	Method B	Method C
			ac Spark Test Voltage	
mils	mm		kV	kV
40	1.02	Visual Inspection	1.5	3.5
45	1.14	"	2.0	4.0
50	1.27	"	2.0	4.5
60	1.52	"	2.5	5.5
65	1.65	"	2.5	6.0
75	1.90	"	3.0	6.5
80	2.03	"	3.0	7.0
85	2.16	"	3.5	7.5
95	2.41	"	4.0	8.5
110	2.79	"	4.5	10.0
140	3.56	"	5.5	12.5

© Copyright 2003 by the National Electrical Manufacturers Association and the Insulated Cable Engineers Association, Incorporated.

Copyright National Electrical Manufacturers Association
Provided by IHS under license with NEMA
No reproduction or networking permitted without license from IHS
Not for Resale

The function of Methods B and C is to ensure against jacket mechanical defects. Inspection for such defects should be conducted by Method A if:

a. Spark test voltage levels will cause breakdown due to the intrinsic dielectric strength of the jacket material.

b. The insulating quality of an underlying tape will prohibit detection of defects at the applicable spark test voltage level.

c. The jacket is conducting.

4.9 HOT CREEP TEST

When a method of determining degree of crosslinking of polymeric electrical cable insulation is required, the procedures as described in ICEA T-28-562 shall be followed.

4.10 VERTICAL TRAY FLAME TEST

When a type test is required on cable determining the relative ability to resist flame propagation in vertical tray, the procedures shall be per 4.10.1 or 4.10.2.

4.10.1 70,000 BTU

The 70,000 BTU vertical tray flame test shall be performed in accordance with ICEA T-30-520.

4.10.2 210,000 BTU

The 210,000 BTU vertical tray flame test shall be performed in accordance with ICEA T-29-520.

4.11 PHYSICAL AND AGING TESTS FOR INSULATION, JACKETS, AND NONMETALLIC CONDUCTING MATERIALS

4.11.1 Sampling

4.11.1.1 Insulations

Samples shall be taken after vulcanization and prior to the application of any covering except those applied before vulcanization. Cable tapes applied prior to vulcanization shall be removed from the samples prior to testing.

4.11.1.2 Jackets

No tests shall be made on jackets less than 30 mils (0.76mm) in thickness.

4.11.1.3 Nonmetallic Conducting Materials

Sample shall be molded from material intended for extrusion on cable.

4.11.2 Number of Test Specimens

Three test specimens shall be prepared from each of the samples selected in accordance with 4.11.1.

When one sample is selected in accordance with 4.11.1, all three test specimens shall be tested and the results averaged. When additional samples are required only one test specimen out of three for each additional sample shall be tested and the other two specimens held in reserve.

4.11.3 Size and Preparation of Specimens

The test specimens shall be prepared using either ASTM D412 Die B or E with specimen length not less than 6 in. (152 mm) or ASTM D 412 Die C or D with specimen length not less than 4.5 in. (114 mm). The specimens shall be free of surface incisions and shall be as free as possible from other imperfections. For wire and cable smaller than 6 AWG having an insulation thickness of 90 mils (2.29 mm) or less, the test specimen may be the entire section of the insulation. When the full cross-section is used, the

© Copyright 2003 by the National Electrical Manufacturers Association and the Insulated Cable Engineers Association, Incorporated.

Copyright National Electrical Manufacturers Association
Provided by IHS under license with NEMA
No reproduction or networking permitted without license from IHS
Not for Resale

specimens shall not be cut longitudinally. For wire and cable 6 AWG and larger, or for wire and cable smaller than 6 AWG having an insulation thickness greater than 90 mils (2.29 mm), specimens rectangular in section with a cross-section not greater than 0.025 square inch (16 mm^2) shall be cut from the insulation. [(In extreme cases, it may be necessary to use a segmental specimen. Except when a full cross-section is used, surface irregularities such as corrugations due to stranding, and so forth, shall be removed so that the test specimen will be smooth and of uniform thickness.

Specimens for tests on jacket compounds shall be taken from the completed wire or cable and cut parallel to the axis of the wire or cable. The test specimen shall be a segment cut with a sharp knife, or a shaped specimen cut out with a die, and shall have a cross-sectional area not greater than 0.025 square inch (16mm^2) after irregularities corrugations, and reinforcing cords or wires have been removed.

Where jackets are bonded to the insulation, separate smoothed samples of the insulation and jacket shall be prepared. Test specimens shall be die-cut from the samples after they have been allowed to recover for at least 30 minutes.

4.11.4 Calculation for Area of Test Specimens

Where the total cross-section of the insulation is used, the area shall be taken as the difference between the area of the circle whose diameter is the average outside diameter of the insulation and the area of the conductor. The area of a stranded conductor shall be calculated from its maximum diameter.

Where a slice cut from the insulation by a knife held tangent to the wire is used and when the cross-section of the slice is the cross-section of a segment of a circle, the area shall be calculated as that of the segment of a circle whose diameter is that of the insulation. The height of the segment is the wall of insulation on the side form which the slice is taken [The values may be obtained from a table giving the areas of segments of a unit circle for the ratio of the height of the segment to the diameter of the circle].

When the cross-section of the slice is not a segment of a circle, the area shall be calculated from a direct measurement of the volume or from the specific gravity and the weight of a known length of the specimen having a uniform cross-section.

When the conductor is large and the insulation thin and when a portion of a sector of a circle has to be taken, the area shall be calculated as the thickness times the width.

This applies either to a straight test piece or to one stamped out with a die and assumes that corrugations have been removed.

When the conductor is large and the insulation thick and when a portion of a sector of a circle has to be taken, the area shall be calculated as the proportional part of the area of the total cross-section.

The dimensions of specimens to be aged shall be determined before the aging test.

4.11.5 Physical Test Procedures

Physical tests on both the unaged and aged test specimens shall be made at approximately the same time. Tests shall be made not earlier than 24 hours nor later than 60 days after vulcanization.

4.11.5.1 Test Temperature

Physical tests shall be made at room temperature not less than 20 °C nor more than 30 °C unless otherwise specified in the test procedure. The test specimens shall be kept at room temperature for not less than 30 minutes prior to test.

4.11.5.2 Type of Testing Machine

The testing machine shall be in accordance with 6.1 of ASTM D 412.

© Copyright 2003 by the National Electrical Manufacturers Association and the Insulated Cable Engineers Association, Incorporated.

Copyright National Electrical Manufacturers Association
Provided by IHS under license with NEMA
No reproduction or networking permitted without license from IHS
Not for Resale

4.11.6 Retests

If any specimen fails to meet the requirements of any test, either before or after aging, that test shall be repeated on two additional specimens taken from the sample. Failure of either of the additional specimens shall indicate failure of the sample to conform to this standard.

When ten or more samples are selected from any single lot, all coils or reels shall be considered as not conforming to this standard if more than 10 percent of the samples fail to meet the requirements. If 10% or less fail, each coil or reel shall be tested and shall be judged upon the results of such individual tests. Where the number of samples selected in any single lot is less than ten, all coils or reels shall be considered as not conforming to this standard if more than 20 percent of the samples fail. If 20 percent or less fail, each coil, reel, or length shall be tested and shall be judged upon the results of such individual tests.

4.11.7 Tensile Strength Test

The tensile strength test shall be made with specimens prepared in accordance with 4.11.2 and 4.11.3. The length of all of the specimens for the test shall be equal. Gauge marks shall be 2 in. (51 mm) when using 6 inch (152 mm) specimens and 1 inch (25.4mm) apart when using 4.5 inch (114 mm) specimens except that 1 inch (25.4 mm) shall be used for polyethylene regardless of specimen length and shall have its cross-sectional area between gauge marks determined in accordance with 4.11.4. Each specimen shall be placed in the jaws of the testing machine with a maximum distance between jaws of 4 in. (102 mm), except 2.5 in. (63.5 mm) for polyethylene. Each specimen shall be stretched at the rate of (20 ± 2) in. [(508 ± 50.8)mm] per minute (jaw speed) until it breaks. The tensile strength shall be calculated in accordance with ASTM D 412, using only those specimens which break between the gauge marks. The tensile strength shall be calculated on the area of the unstretched specimen.

The tensile and elongation determinations for compounds for which the compound manufacturer certifies that the base resin content is more than 50 percent by weight of high density polyethylene (having a density of 0.926mg/m^3 or greater) or total base polyethylene resin content (having a density of 0.926mg/m^3 or greater) shall be permitted to be tested at a jaw separation rate of 2 in. per minute (51 mm per minute) as an alternate to 20 in. per minute (508 mm per minute).

Specimen length gauge mark distance and jaw speed shall be recorded with the results.

4.11.8 Tensile Stress Test

The tensile stress test shall be made in conjunction with the tensile strength test by recording the load when the gauge marks indicate that the specimen is at its prescribed elongation. The tensile stress shall be calculated in accordance with ASTM D 412. The tensile stress shall be calculated on the area of the unstretched specimen.

4.11.9 Elongation Test

Elongation at rupture shall be determined simultaneously with the test for tensile strength and on the same specimens.

The elongation shall be taken as the distance between the gauge marks at rupture less the original gauge length marked on the specimen. The percentage of elongation at rupture is the elongation divided by the original gauge length and multiplied by 100. Specimen length, gauge mark distance, and jaw speed shall be reported with the results.

4.11.10 Set Test

The set test shall be made on test specimens which have been prepared, marked and stretched in accordance with 4.12 until the gauge marks are 6 in. (152 mm) apart. The test specimens shall be held in the stretched position for 5 seconds and then released. The distance between gauge marks shall be determined 1 minute after the release of tension. The set is the difference between this distance and the original 2 inch (50.8 mm) gauge length, expressed as a percentage of the original gauge length.

© Copyright 2003 by the National Electrical Manufacturers Association and the Insulated Cable Engineers Association, Incorporated.

Copyright National Electrical Manufacturers Association
Provided by IHS under license with NEMA
No reproduction or networking permitted without license from IHS
Not for Resale

4.11.11 Aging Tests

4.11.11.1 Test Specimens

Test specimens of similar size and shape shall be prepared from each sample selected in accordance with 4.11.1 through 4.11.3, three for the determination of the initial or unaged properties and three for each aging test required for the insulation or jacket being tested.

When the entire cross-section of insulation is used, the insulation shall be subjected to the aging condition with the conductor removed and each end of the specimen suitably plugged.

Die-cut specimens shall be smoothed before being subjected to the accelerated aging test when the thickness of the specimens is 90 mils (2.29 mm) or greater before smoothing.

Simultaneous aging of different compounds should be avoided.

The test specimens shall be suspended vertically in such a manner that they are not in contact with each other or with the sides of the container.

The aged specimens shall have a rest period of not less than 16 hours nor more than 96 hours between the completion of the aging tests and the determination of tensile strength and elongation.

4.11.11.2 Air Oven Test

The test specimens shall be heated at the required temperature for the specified period in an oven having forced circulation of fresh air. The oven temperature shall be controlled to within ± 1 °C and recorded continuously.

4.11.11.3 Oil Immersion Test for Polyvinyl-Chloride Jacket

The test specimens shall be immersed in ASTM Oil No. 2 or IRM 901, described in Table 1 of ASTM D 471, at (70 ± 1) °C for 4 hours. At the end of this time, the specimens shall be removed form the oil and blotted.

The calculations for tensile strength shall be based on the cross-sectional area of the specimen obtained before immersion in oil. The elongation shall be based on gauge marks applied to the specimen before immersion in oil.

4.11.11.4 Oil Immersion Test for Thermosetting Jacket

The test specimens shall be completely immersed in ASTM Oil No. 2 or IRM 901, described in Table 1 of ASTM D 471, at (121 ± 1) °C for 18 hours. The specimens shall than be removed from the oil, blotted lightly, and suspended in air at room temperature for only 4 hours ± ½ hour before being tested for tensile strength and elongation.

The calculation for tensile strength shall be based on the cross-sectional area of the specimen obtained before immersion in oil. The elongation shall be based on the gauge marks applied to the specimen before immersion in the oil.

4.11.12 Physical Tests for Nonmetallic Conducting Materials Intended for Extrusion

4.11.12.1 Test Sample

See 4.11.1.3

4.11.12.2 Test Specimens

For each test, three test specimens, each approximately 6 in. (152 mm) long and not greater than 0.25 square inch (16 mm^2) in cross-section, shall be die-cut from the test sample. All three specimens shall be tested and the results averaged.

© Copyright 2003 by the National Electrical Manufacturers Association and the Insulated Cable Engineers Association, Incorporated.

Copyright National Electrical Manufacturers Association
Provided by IHS under license with NEMA
No reproduction or networking permitted without license from IHS
Not for Resale

4.11.12.3 Elongation

Elongation shall be determined in accordance with 4.14 and 4.16.1.

4.11.12.4 Brittleness

Brittleness shall be determined in accordance with ASTM D 746, using Specimen A.

4.12 ABSORPTION COEFFICIENT

Three test specimens shall be taken from each sample. One test specimen of the three shall be tested, and the other two specimens held in reserve, except when only one sample is selected, then all three test specimens shall be tested and the average of the results reported. The absorption coefficient of jacket compounds shall be determined in accordance with ASTM D3349.

4.13 HEAT SHOCK

Each sample of jacketed cable selected shall be wound tightly around a mandrel having a diameter in accordance with the following table, held in place, and subjected to a temperature of (121 ± 1) °C for 1 hour.

Outside Diameter of Wire or Cable			Diameter of Mandrel as
In.	mm	Number of Adjacent Turns	Multiple of outside Diameter of Cable
0-0.750	0-19.05	6	3
0.751-1.500	19.08-38.10	180-degree bend	8
1.501 and larger	38.13 and larger	180-degree bend	12

4.14 ENVIRONMENTAL CRACKING

Except as otherwise specified in 4.14.1 and 4.14.2 the test shall be made in accordance with ASTM D 1693.

4.14.1 Test Specimens

Three test specimens, approximately 1.5 in. (38.1 mm) long, 0.5 in. (12.7 mm) wide, shall be molded from material taken from the completed cable. The thickness shall be 0.125 in. (3.18 mm) thick for low density polyethylene (Type I) and 0.075 in. (1.9 mm) thick for medium and high density polyethylene (Type II and Type III). The temperature of the molded specimens shall be lowered at any suitable rate. A slit made with a razor blade, approximately 0.075 in. (1.9 mm) long and from 0.020 to 0.025 in. (0.51 to 0.64 mm) deep for Type I and from 0.012 to 0.015 in. (0.3 to 0.38 mm) deep for Type II and Type III, shall be centrally located on one of the (1.5 x 0.5) inch [(38.1 x 12.7) mm] surfaces.

4.14.2 Test Procedures

The specimens shall be bent with the slit on the outside and placed in a test tube 200 mm long and 32 mm in outside diameter. The cracking agent (Igepal CO-630 made by the GAF Corporation, or its equivalent) shall be added to completely cover the specimen. The test tube, suitably closed by means such as a foil-covered cork, shall be placed in an oven at 50 °C ± 1 °C for 48 hours. At the end of this period, the specimens shall be removed, allowed to cool to room temperature, and inspected for cracking.

4.15 METHOD FOR FLEXIBILITY TEST FOR CONTINUOUS CORRUGATED ARMOR

A suitable length of armored cable with jacket removed, if any, shall be bent in a “U” bend around a mandrel having a diameter equal to not greater than 14 times the cable diameter with sufficient tension so it conforms closely to the periphery of the cylinder, straightened, and then bent 180 degrees in the reverse direction completing one cycle. The rate of bend shall be such that the test is completed within 1 minute. The test is performed at room temperature.

© Copyright 2003 by the National Electrical Manufacturers Association and the Insulated Cable Engineers Association, Incorporated.

Copyright National Electrical Manufacturers Association
Provided by IHS under license with NEMA
No reproduction or networking permitted without license from IHS
Not for Resale

4.16 SHRINKBACK TEST

4.16.1 Sample Preparation

Five samples, each 1.5 ft (0.45 m) are required for the test. A length of the cable 17.5 ft (5.25 m) long is to be laid out and straightened. The cable is to be marked at a point 5.0 ft (1.5 m) from one end and then marked at 1.5 ft (0.45 m) intervals for a distance of 7.5 ft (2.25 m). The cable is to be cut using a fine tooth saw at the 1.5 ft (0.45 m) intervals marked on the cable. The two 5.0 ft (1.5 m) end pieces from the original cable length are to be discarded.

4.16.2 Test Procedure

The five 1.5 ft (0.45 m) long cable samples shall be heated in a forced air convection oven until they reach a temperature of 50 °C ± 5°C for a period of two hours. After the two hour period, the samples shall be removed from the oven and allowed to cool for 2 hours at room temperature. At the end of the cooling period, the samples shall be measured for shrinkback using a micrometer, or preferably an optical measuring device. The selected measuring device shall have a minimum resolution of 1 mil (0.025 mm). One reading is to be made from each end of each samples between the end of the conductor and the edge of the conductor shield interface at the point of circumference of the conductor where the shrinkback is maximum.

The heating and cooling cycle shall be performed three times, if required.

4.17 WAFER BOIL TEST FOR CONDUCTOR AND INSULATION SHIELDS

Any outer covering and the conductor shall be removed. A representative cross section containing the extruded conductor shield and insulation shield, shall be cut from the cable. The resulting wafer shall be at least 25 mils (0.64 mm) thick. The wafer may be further separated into concentric rings by careful separation of the shield from the insulation. This may include the use of a punch to separate the conductor shield or insulation shield from most of the insulation.

The resulting wafer(s) or rings shall then be immersed in boiling decahydronaphthalene with 1 percent by weight Antioxdant 2246 (or other reagents specified in ASTM D 2765, such as xylene) for 5 hours using the equipment specified in ASTM D2765. (This solution may be reused for subsequent tests provided that it works as effectively as a fresh solution.) The wafer(s) shall then be removed from the solvent and examined for shield/insulation interface continuity with a minimum 15-power magnification.

Total or partial separation of the semiconducting shields from the insulation is permissible. Partial loss of the shields is also permissible provided each shield is a continuous ring. If the conductor shield dissolves or cracks such that it does not maintain a continuous ring, the cable lot shall be rejected. If the insulation shield dissolves such that it does not maintain a continuous ring, the cable lot shall either be rejected by the manufacturer or a sample of insulation shield from the same lot shall be subjected to the requirements of ICEA T-28-562 Hot Creep Test.

© Copyright 2003 by the National Electrical Manufacturers Association and the Insulated Cable Engineers Association, Incorporated.

Copyright National Electrical Manufacturers Association
Provided by IHS under license with NEMA
No reproduction or networking permitted without license from IHS
Not for Resale

< This page is intentionally left blank.>

© Copyright 2003 by the National Electrical Manufacturers Association and the Insulated Cable Engineers Association, Incorporated.

Copyright National Electrical Manufacturers Association
Provided by IHS under license with NEMA
No reproduction or networking permitted without license from IHS
Not for Resale