9009279 0002757 94T

IPCEA Pub. No. S-69-530 (Second Edition)
NEMA Pub. No. WC 41-1975

IPCEA-NEMA Standards Publication Coaxial Communication Cable (CATV)



INSULATED POWER CABLE ENGINEERS ASSOCIATION



NATIONAL ELECTRICAL MANUFACTURERS ASSOCIATION

Copyright National Electrical Manufacturers Association
Provided by IHS under license with NEMA
No reproduction or networking permitted without license from IHS

Not for Resale

9009279 0002758 886

IPCEA Pub. No. S-69-530 (Second Edition)

NEMA Pub. No. WC 41-1975

IPCEA-NEMA Standards Publication Coaxial Communication Cable (CATV)

This publication supersedes
IPCEA Pub. No. S-69-530 (First Edition)
NEMA Pub. No. WC 41-1971

Approved January 21, 1975, by
INSULATED POWER CABLE ENGINEERS ASSOCIATION

Approved as a NEMA Standard January 21, 1975, by
NATIONAL ELECTRICAL MANUFACTURERS ASSOCIATION

Copyright National Electrical Manufacturers Association
Provided by IHS under license with NEMA
No reproduction or networking permitted without license from IHS

Not for Resale

9009279 0002759 712

© 1975 by

Insulated Power Cable Engineers Association and
National Electrical Manufacturers Association

Copies available from

National Electrical Manufacturers Association
155 East 44th Street
New York, N.Y. 10017

Printed in U.S.A.

Copyright National Electrical Manufacturers Association
Provided by IHS under license with NEMA
No reproduction or networking permitted without license from IHS

Not for Resale

9009279 0002760 434

FOREWORD

This Standards Publication for coaxial communication cable (CATV) was developed by the Electronic Wire and Cable Section of NEMA and approved by the Insulated Power Cable Engineers Association. It has been developed in close coordination with user needs and end-use requirements for military as well as industrial applications through consultation with, and help from, technical groups such as Underwriters Laboratories Inc., the American Society for Testing and Materials, appropriate government agencies, and standards groups within applicable end user companies.

User comments and recommendations are solicited on all aspects of these standards. They should be addressed to:

Technical Director
Manager, Engineering and Safety Regulations Department
National Electrical Manufacturers Association
155 East 44th Street
New York, New York 10017

Copyright National Electrical Manufacturers Association
Provided by IHS under license with NEMA
No reproduction or networking permitted without license from IHS
Not for Resale

9009279 0002761 370

TABLE OF CONTENTS

Page

Part 1, GENERAL
1.0 Scope 1

Part 2, TEST METHODS
2.0 Calibration of Test Equipment 1
2.1 Continuity 1
2.2 Direct-current Resistance
2.2.1 Apparatus 1
2.2.2 Test Procedure 1
2.3 Dielectric Strength
2.3.1 Apparatus 1
2.3.2 Test Procedure 1
2.4 Capacitance
2.4.1 Apparatus 2
2.4.2 Test Procedure 2
2.5 Velocity of Propagation
2.5.1 Apparatus 2
2.5.2 Test Procedure 2
2.6 Characteristic Impedance 3
2.7 Structural Return Loss
2.7.1 Apparatus 3
2.7.2 Calibration 3
2.7.3 Test Procedure 3
2.8 Attenuation
2.8.1 Apparatus 5
2.8.2 Test Procedure 5
2.8.2.1 Method 1—Fixed Frequency Attenuation Measurement 5
2.8.2.2 Method 2—Swept Frequency Attenuation Measurement 6

Part 3, MEASUREMENT PROCEDURE FOR COMPARATIVE SHIELD EFFECTIVENESS OF 75-OHM COAXIAL CABLES
3.0 Scope 7
3.1 Description of Fixture 7
3.2 Sample
3.2.1 Connector Attachment 7
3.2.2 Termination 7
3.2.3 Mechanical Support 7
3.3 Fixture Leakage
3.3.1 Procedure 7
3.3.2 Requirement 7
3.4 Procedure
3.4.1 Apparatus 7
3.4.2 Equipment Set-up 8
3.4.3 Measurements 8
3.5 Comparative Shield Effectiveness
3.5.1 Definition and Interpretation 8

APPENDIX A—FIXTURE
A.1 General Description 9
A.2 Detailed Description 9

Copyright National Electrical Manufacturers Association
Provided by IHS under license with NEMA
No reproduction or networking permitted without license from IHS
Not for Resale

9009279 0002762 207

IPCEA-NEMA Standards Publication

Coaxial Communication Cable (CATV)

Part 1
GENERAL

1.0 SCOPE. These standards apply to the electrical testing of thermoplastic-insulated coaxial cables which are used for the transmission of radio frequency (rf) energy.

Part 2
TEST METHODS

2.0 CALIBRATION OF TEST EQUIPMENT. Test equipment shall be calibrated by the manufacturer or a commercial facility utilizing the reference standards (or interim standards) whose calibration is certified as being traceable to the National Bureau of Standards.

2.1 CONTINUITY. A direct-current potential shall be applied through an indicator to the conductor under test.

2.2 DIRECT-CURRENT RESISTANCE

2.2.1 Apparatus. A Kelvin-type double bridge shall be used for the measurement of conductors with resistance values less than 1.0 ohm and may be used for resistance values up to 10.0 ohms. A Wheatstone-type bridge may be used for measuring resistance values in excess of 1.0 ohm. The accuracy of the test bridge shall be ± 0.25 percent or better.

2.2.2 Test Procedure. The inner conductor and the outer conductor shall be measured separately. The direct-current resistance may be converted to 68°F (20°C) by the following formula:

$$R_{t1} = \frac{R_{t2}}{1 + \alpha (T_2 - 68)}$$

where—

R_{t1} = Resistance in ohms at 68°F (20°C).

R_{t2} = Measured resistance in ohms at T_2.

T_2 = Measured temperature in degrees Fahrenheit at the time of the resistance measurement.

α = Temperature coefficient of resistivity of the conductor.

2.3 DIELECTRIC STRENGTH

2.3.1 Apparatus. A high-potential test set capable of supplying the required test voltage shall be used.

2.3.2 Test Procedure. The test voltage shall be raised slowly to the specified value and shall be applied between the center conductor and the outer conductor for the specified interval of time. The outer conductor shall be grounded.

The cable shall be considered as having passed the dielectric strength test if voltage breakdown does not occur at any time during the test at the specified test voltage.

Copyright National Electrical Manufacturers Association
Provided by IHS under license with NEMA
No reproduction or networking permitted without license from IHS
Not for Resale

9009279 0002763 143

2.4 CAPACITANCE

2.4.1 Apparatus. A capacitance-type bridge shall be used for the measurement. The accuracy of the test bridge shall be ± 0.1 percent or better.

2.4.2 Test Procedure. The capacitance shall be measured between the inner conductor and outer conductor on a suitable length of finished cable at a frequency which will provide equivalent results if measured above 1 megahertz.

2.5 VELOCITY OF PROPAGATION

2.5.1 Apparatus

(a) Signal generator with a broad frequency range output capability from 10 megahertz on up.

(b) Frequency counter in the frequency range produced by the signal generator with an accuracy of ± 0.1 percent or better.

(c) Detector.

(d) Pad.

(e) Tees.

2.5.2 Test Procedure. The velocity of propagation is determined in terms of the percentage of the velocity of wave propagation along the cable, to the velocity of an electromagnetic wave in free space.

The velocity of propagation shall be measured as follows (see Fig. 2-1). The signal generator shall be carefully tuned for a minimum (sharp null) reading at the detector; the frequency shall be carefully noted and shall be not less than 10 megahertz. This shall be repeated at the next two minimums occurring above and below the original minimum.

Starting at the highest frequency, each succeeding lower frequency shall be subtracted, resulting in four difference-frequencies. The arithmetic mean of these frequencies shall be determined and shall be considered to be the resultant frequency (f_r in the following equation).

$$\text{Percent velocity of propagation} = \frac{f_r \times L}{4.92}$$

where—

f_r = Resultant frequency in megahertz.

L = Length of cable in feet.

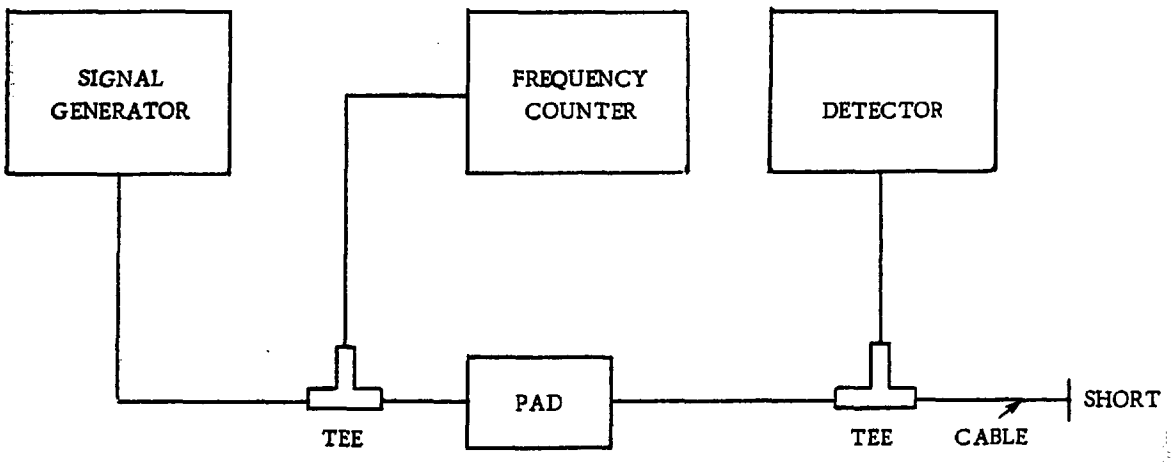

Fig. 2-1

Copyright National Electrical Manufacturers Association
Provided by IHS under license with NEMA
No reproduction or networking permitted without license from IHS
Not for Resale

9009279 0002764 08T

2.6 CHARACTERISTIC IMPEDANCE. The characteristic impedance shall be read from the impedance indicator on the variable bridge used in the structural return loss measurement (see 2.7) or calculated from the following formula:

$$Z_0 \text{ in ohms} = \frac{101,600}{\left(\begin{array}{c}\text{velocity of}\\ \text{propagation}\\ \text{in percent}\end{array}\right)\left(\begin{array}{c}\text{capacitance in}\\ \text{picofarads}\\ \text{per foot}\end{array}\right)}$$

2.7 STRUCTURAL RETURN LOSS

2.7.1 Apparatus

(a) Sweep Generator. The sweep generator shall be capable of linearly sweeping a preselected frequency spectrum at a rate of approximately 60 times per second with a level sufficient to meet the requirements given in item (e) for the detector sensitivity.

(b) Coaxial Switch. The coaxial switch shall be in synchronization with the generator and capable of automatically switching approximately sixty times per second so that no discernible noise is perceived in the detector.

(c) Reference Attenuator. The reference attenuator shall be capable of measuring at least 50 decibels in steps not greater than 0.5 decibel with an accuracy of ± 0.4 decibel.

(d) Variable Bridge. The bridge shall have a minimum balance 20 decibels higher than the minimum structural return loss requirement in order to obtain a bridge measurement accuracy of ± 10 percent. The balance shall be checked with the aid of a standard resistor in a coaxial mount whose value is 75 ± 0.1 ohms and its voltage standing wave ratio (VSWR) not greater than 1.0063. The standard resistor is plugged into the bridge and the R and C arms of the bridge adjusted until the minimum reflection is obtained. The reflection pattern should be below the minimum balance reference line.

(e) Detector. The detector system shall be capable of responding to fast rise-time spikes and very high frequency spikes. This may be accomplished by control of either the sweep width or sweep speed without adjusting the bridge or termination settings. The sweep width and/or sweep speed should be reduced to permit maximum detector output (reflected-signal indication). The detector system, in conjunction with the reference attenuator, shall be capable of displaying on the oscilloscope a 30-decibel reference pattern at least 5 centimeters above the base line.

2.7.2 Calibration. The variable resistance arm of the bridge shall be calibrated by setting the R knob pointer on the dial to the value of the standard resistor and setting the C knob to zero (0). Keeping C at zero, the R arm shall be turned until the average reflection specified in the following table is reached. The corresponding "R" in the table is the true value and should be marked on the bridge.

Average Reflection, Decibels	Actual R
37.6	77
43.5	76
43.5	74
37.4	73

The calibrated variable resistance arm of the bridge shall be set to 75 ohms. The cable terminals of the bridge shall be shorted. The output of the "reference branch" shall be adjusted to equal the voltage across the detector from the "unknown branch" by inserting loss pads in the "reference branch."

2.7.3 Test Procedure. The structural return loss (SRL) for a specified frequency spectrum shall be measured in accordance with Fig. 2-2, Page 4.

Copyright National Electrical Manufacturers Association
Provided by IHS under license with NEMA
No reproduction or networking permitted without license from IHS
Not for Resale

9009279 0002765 T16

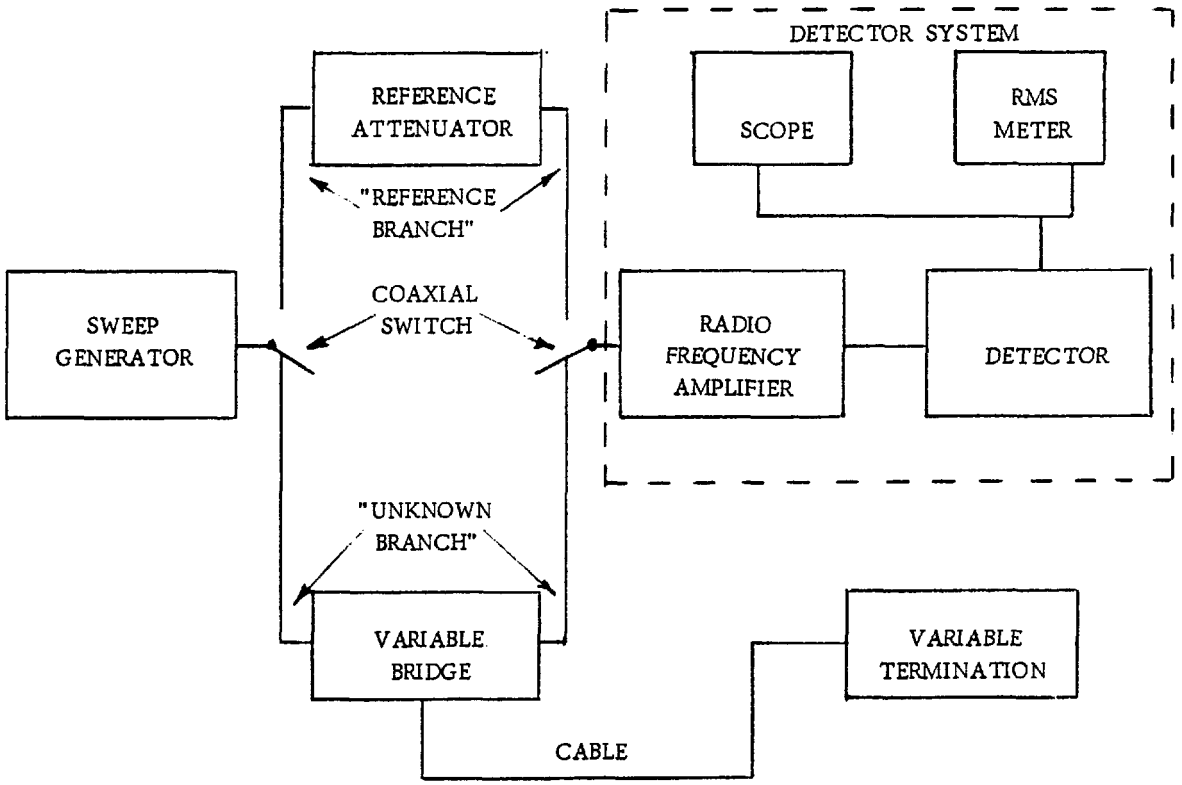

The measuring technique consists of adjusting the R and C dials of the variable bridge arms, as well as those of the variable termination at the far end of the cable under test, to give a minimum indication on the rms voltmeter. The R setting on the bridge represents the average characteristic impedance of the cable since it is adjusted to match the cable. The maximum SRL level is determined by adjusting the reference signal from the "reference branch" to the same level as the crest of the SRL largest spike and reading the attenuator setting in decibels.

Fig. 2-2

Copyright National Electrical Manufacturers Association
Provided by IHS under license with NEMA
No reproduction or networking permitted without license from IHS
Not for Resale

9009279 0002766 952

2.8 ATTENUATION

2.8.1 Apparatus

(a) Signal generator which produces either a single frequency output or a linear swept preselected frequency spectrum with sufficient level to meet the requirements for the detector sensitivity.

(b) Frequency counter in the frequency range produced by the signal generator with an accuracy of ± 0.1 percent or better.

(c) Calibrated variable attenuator capable of measuring at least 50 decibels in steps not greater than 0.5 decibel with an accuracy of ± 0.4 decibel.

(d) Coaxial switch which is in synchronization with the sweep generator and capable of automatically switching approximately sixty times per second so that no discernible noise is perceived in the detector.

(e) Detector.

(f) Pads.

2.8.2 Test Procedure. Cable attenuation, expressed in decibels per 100 feet at 68°F, shall be measured at a sufficiently low power level so that the resulting temperature rise will be negligible. Attenuation shall be measured by one of the following methods:

2.8.2.1 Method 1—Fixed Frequency Attenuation Measurement. Connect the test equipment and insert the test cable as shown in Fig. 2-3.

Adjust the signal generator for the desired frequency and the attenuator to produce a reference indication at the tuned detector. Record this attenuator setting as a_1.

Remove the test cable and reconnect the test circuit using a converter adapter or a very short length of cable.

Adjust the attenuator (add attenuation) to reproduce the reference indication at the tuned detector. Record this attenuator setting as a_2.

Calculate the cable attenuation as follows:

$$a = \frac{100}{L} (a_2 - a_1)$$

where—

a = Cable attenuation in decibels per 100 feet.

a_1 = Attenuator setting with cable in circuit.

a_2 = Attenuator setting with cable out of circuit.

L = Length of cable under test in feet.

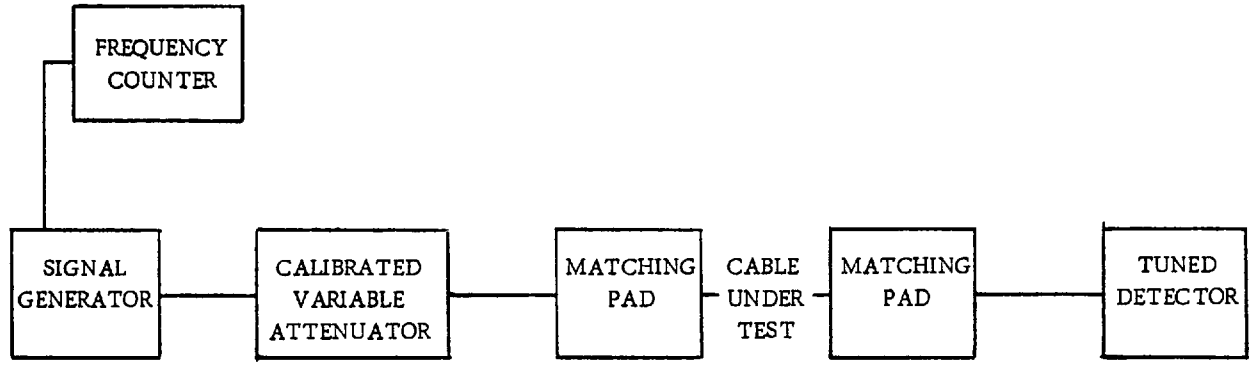

Fig. 2-3

Copyright National Electrical Manufacturers Association
Provided by IHS under license with NEMA
No reproduction or networking permitted without license from IHS
Not for Resale

9009279 0002767 899

2.8.2.2 Method 2—Swept Frequency Attenuation Measurement. Connect the test equipment and insert the test cable as shown in Fig. 2-4.

Adjust the sweep generator for the test frequency range.

Adjust the attenuator until the two displayed traces intersect and record this as a_1 at the test frequency (determined by the frequency counter).

Calculate the cable attenuation as follows:

$$a = \frac{100\ a_1}{L}$$

where—

a = Cable attenuation in decibels per 100 feet.

a_1 = Attenuator setting at trace intersection.

L = Length of cable under test in feet.

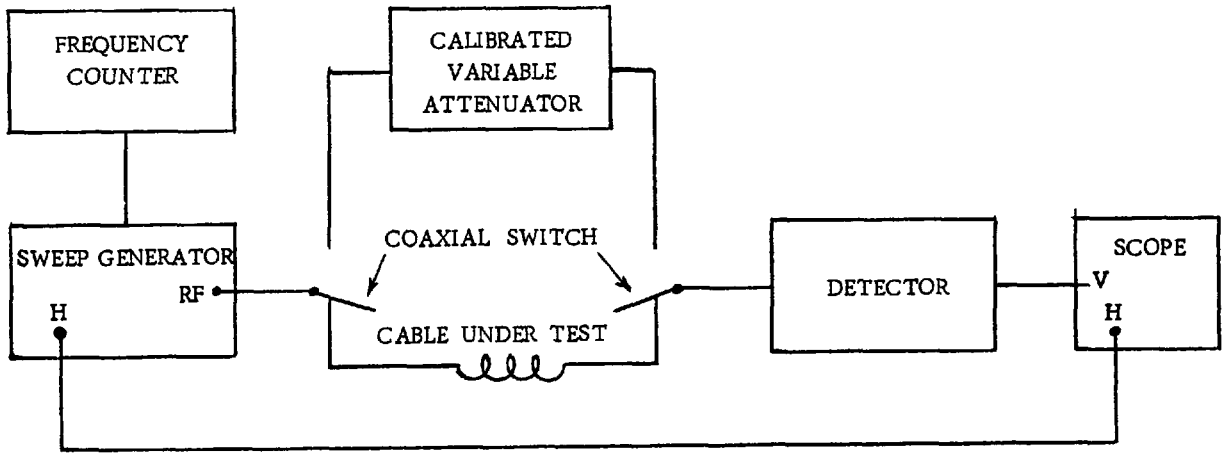

H = horizontal RF = radio frequency V = vertical

Fig. 2-4

Copyright National Electrical Manufacturers Association
Provided by IHS under license with NEMA
No reproduction or networking permitted without license from IHS
Not for Resale

9009279 0002768 725

Part 3
MEASUREMENT PROCEDURE FOR COMPARATIVE SHIELD EFFECTIVENESS OF 75-OHM COAXIAL CABLES

3.0 SCOPE. Part 3 describes the fixture, cable sample and procedure for making reproducible measurements to compare the shielding effectiveness over the frequency range from 5 to 300 megahertz of 75-ohm coaxial cable shields which have essentially the same diameter but different construction features. It may also be used as a quality control check to monitor the lot-to-lot uniformity of cables made to the same design. It applies primarily to cables used as CATV drop wire.

3.1 DESCRIPTION OF FIXTURE. The fixture shall be that described in Appendix A, or the equivalent.

3.2 SAMPLE

3.2.1 Connector Attachment. The sample of cable to be tested shall be fitted at each end with suitable connectors. The same type of connector shall be used for the test samples which are being compared.

The length of the sample over the connector ends shall be 36 inches. Extreme care shall be used to minimize signal leakage at the connector. All shield components, including foils and drain wires, shall be carried inside the connector.

3.2.2 Termination. One end of the sample shall be terminated with a shielded 75-ohm load.

3.2.3 Mechanical Support. Flexible cable samples shall be supported in the center of the inner conductor of the fixture by using the plastic tube described in Appendix A, par. A.2 and Fig. A-2 detail F, or the equivalent. Semi-rigid samples shall be as straight as possible and may be supported by their connector at the end plate and by a suitable pierced plastic disc or C-washer near the load.

3.3 FIXTURE LEAKAGE

3.3.1 Procedure. Prior to making measurements on cables, the leakage of the fixture itself (especially of the connector and 75-ohm termination which will be used with the sample) shall be checked. This shall be done by connecting the 75-ohm termination to the center connector on the inside of the end plate by means of a double male adapter and performing all of the steps described in 3.4.1 through 3.4.3.

3.3.2 Requirement. The leakage shall be at least 6 decibels better than that obtained on a sample of cable over the frequency range of interest.

3.4 PROCEDURE

3.4.1 Apparatus. The apparatus shall consist of the following:

(a) The fixture described in 3.1.

(b) A shielded 50-ohm termination having a male type N connector.

(c) Signal source and detector. Either swept or point-by-point fixed frequency techniques may be used. It is essential that the combination of the maximum output level of the signal source (including any associated amplifiers) and the maximum usable sensitivity of the detector and readout device provide a dynamic range at least 10 decibels greater than the maximum shield effectiveness which will be measured. The detector should be a narrow-band device to minimize interference from other sources.

(d) Hybrid splitter. A commercial 75-ohm two-set couplet which has been found to give equal output from the two output ports over the frequency range of interest.

(e) Matching transformer, 50 to 75 ohms, if the signal source is 50 ohms.

(f) Attenuators. Fixed attenuators (General Radio type 874-G-10 and G-20 or the equivalent) to provide up to 50 decibels in 10-decibel steps or a variable attenuator providing up to 50 decibels in 10-decibel steps; the impedance should be 50 ohms.

(g) Shielded coaxial interconnecting cables with appropriate connectors. Care shall be taken to insure that the input and output interconnecting cables are sufficiently isolated to meet the requirements of 3.3.

Copyright National Electrical Manufacturers Association
Provided by IHS under license with NEMA
No reproduction or networking permitted without license from IHS
Not for Resale

9009279 0002769 661

3.4.2 Equipment Set-up. The 50-ohm termination shall be attached to the 3 1/8 inch to N adapter on the fixture.

The sample, prepared and terminated in accordance with 3.2, shall be connected to the center connector on the inside of the end plate. The fixture shall be closed and bolted, taking care to insure that the banana plug on the end plate mates with the jack on the inner conductor of the fixture.

The remaining apparatus shall be connected as shown in the block diagram in Fig. 3-1. Direct coupling between input and output leads and components shall be minimized to permit meeting the requirements of 3.3.

3.4.3 Measurements. With the detector connected to the test fixture, the signal source and detector shall be adjusted to obtain a signal which is clearly distinguishable from the background noise. This value shall be recorded.

Without changing the signal source level, the detector shall be disconnected from the text fixture and connected to the attenuators in the other leg of the splitter output. These attenuators and any attenuators in the detector shall be adjusted to obtain a reading which is approximately equal to that obtained in the preceding paragraph.

3.5 COMPARATIVE SHIELD EFFECTIVENESS

3.5.1 Definition and Interpretation. The leakage of the sample shall be the algebriac sum in decibels of the attenuation of the external attenuators, the change in attenuation of the attenuators in the detector, and the decrease in the indicated detector reading. (An increase in decibels in the detector reading should be subtracted.)

The numerical leakage value has no valid significance when taken by itself. The significant value is the comparative shield effectiveness which is the difference, in decibels, between this leakage value and the leakage value obtained when the identical measurement is performed on another cable sample which is to be compared with the first.

The data for a given sample, plotted as a function of frequency, will exhibit some variation, primarily because of resonances. However, the data for two cables having essentially the same dimensions but different shields will plot essentially parallel because the resonances will occur at essentially the same frequencies for both cables.

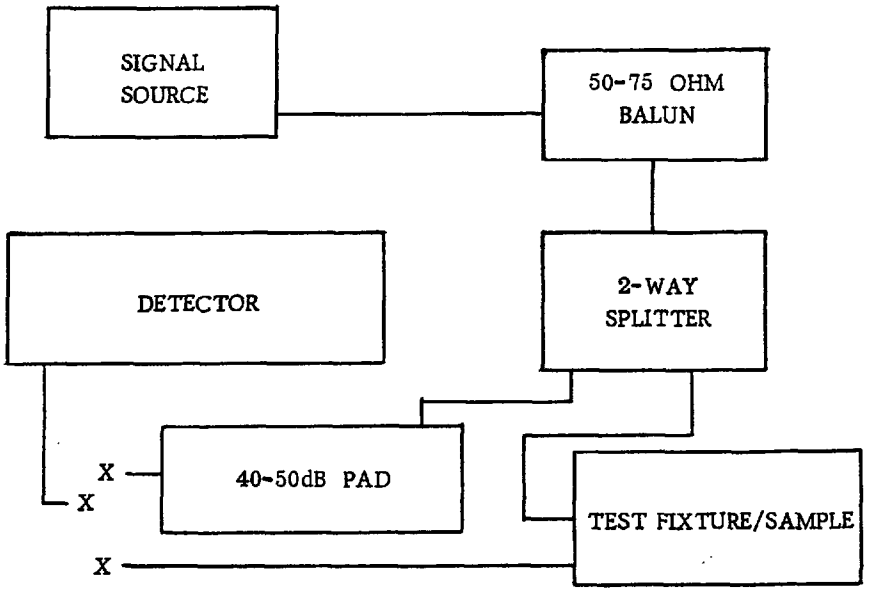

Fig. 3-1
BLOCK DIAGRAM

Copyright National Electrical Manufacturers Association
Provided by IHS under license with NEMA
No reproduction or networking permitted without license from IHS
Not for Resale

9009279 0002770 383

APPENDIX A*
FIXTURE

The following description is based on Belden SEED™ fixture part YR-14017, for which Patent 3,839,672 was granted on October 1, 1974. The fixture itself or a royalty free license to make (or have made) and to use the fixture may be secured from the Belden Corporation, 2000 South Batavia Avenue, Geneva, Illinois 60134. Any other fixture which performs the same function is adequate for the purposes of this publication.

A.1 GENERAL DESCRIPTION. The fixture is a quadraxial device made from 3 1/8-inch 50-ohm rigid coaxial transmission line hardware as described in the Electronic Industries Association (EIA) Standard RS-225.

A.2 DETAILED DESCRIPTION. A cut-away drawing of the fixture is shown in Fig. A-1.

The outer conductor is the outer conductor of a 3 1/8-inch 50-ohm rigid coaxial transmission line with a flange on each end. The length over the flanges is 60 inches ± 1/64 inch.

The inner conductor is the inner conductor of a 3 1/8-inch 50-ohm rigid coaxial transmission line, SPECIFIED TO BE WITHOUT CENTERING PEGS, NOT PIERCED. The overall length should be such that a 1/8-inch gap will exist between the end of the conductor and the inner surface of the end plate when the other end of the conductor is properly mated with the connector on the 3 1/8-inch to N adapter and this adapter is bolted to the outer conductor flange.

The inner conductor has a female banana jack in a rectangular mounting block brazed to its outer surface near the end next to the end plate. (See Fig. A-2 detail B.) This mates with the center pin of the off-center connector in the end plate.

The inner conductor is supported near the end plate by means of a 3 1/8-inch connector insulator which has been modified by enlarging the center hole to form a press fit over the inner conductor and turning down the outside diameter to form a slip fit inside the outer conductor. (See Fig. A-2 detail C.)

The end plate is made from a 3 1/8-inch blank end plate having a 1/8-inch-thick center portion. A type BNC double female feed-through connector (UG-492A/U) is installed in the center of the end plate. A modified General Radio type 874-CA connector (see Fig. A-2 detail D and detail E) is installed off center in the end plate (see Fig. A-2 detail A and detail E) to mate with the banana jack on the inner conductor.

To assist in centering the sample being tested within the inner conductor tube, it is suggested that a polyethylene or acrylic plastic tube having an inside diameter slightly larger than the diameter of the sample and having a lengthwise slot slightly wider than the diameter of the sample be used. (See Fig. A-2 detail F.) This plastic tube may be centered by means of "C" shaped nylon washers which form a slip fit inside the inner conductor and a snug fit on the plastic tube. (See Fig. A-2 detail G.)

* This Appendix is approved by NEMA as Authorized Engineering Information.

Copyright National Electrical Manufacturers Association
Provided by IHS under license with NEMA
No reproduction or networking permitted without license from IHS
Not for Resale

9009279 0002771 21T

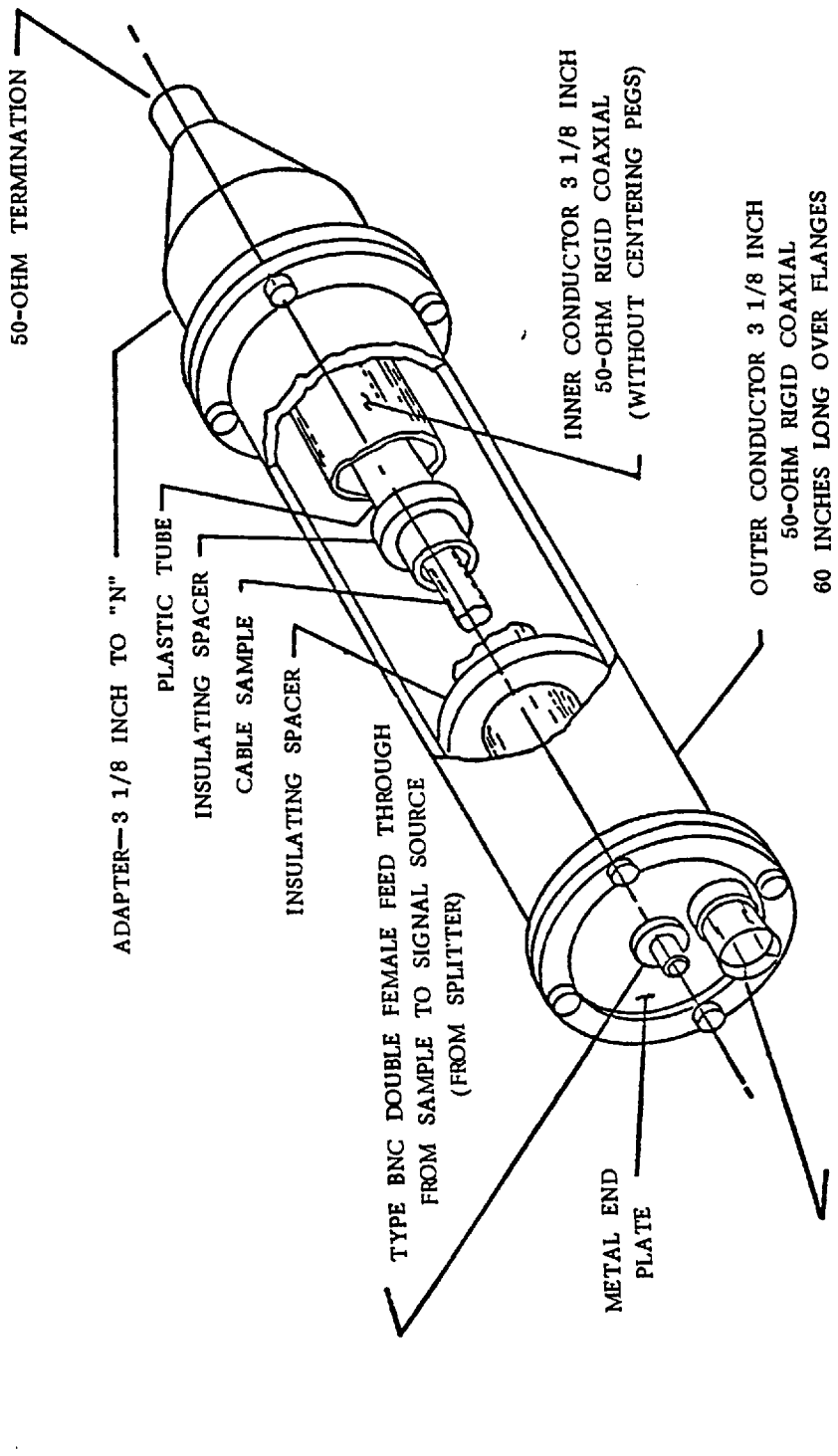

CABLE SAMPLE IS 36 INCHES OVER FACES OF MALE BNC CONNECTORS—TERMINATED IN SHIELDED 75 OHM LOAD

Fig. A-1

Copyright National Electrical Manufacturers Association
Provided by IHS under license with NEMA
No reproduction or networking permitted without license from IHS
Not for Resale

9009279 0002772 156

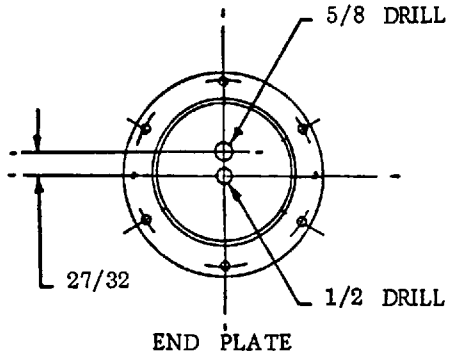

DETAIL "A" NO SCALE

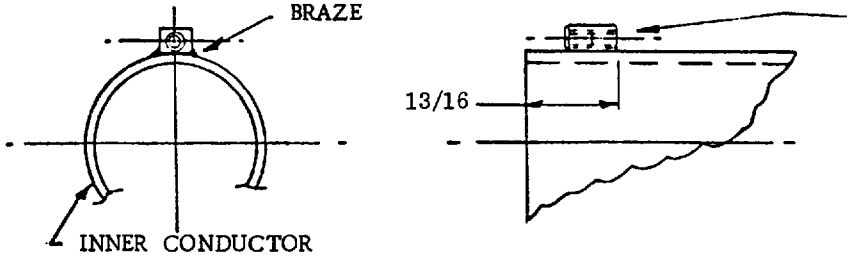

DETAIL "B" NO SCALE

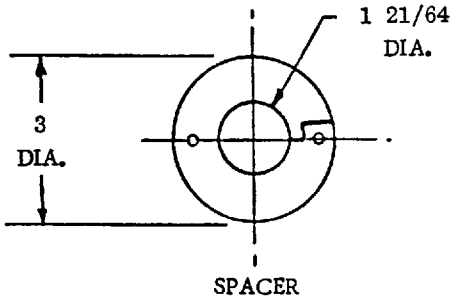

DETAIL "C" NO SCALE

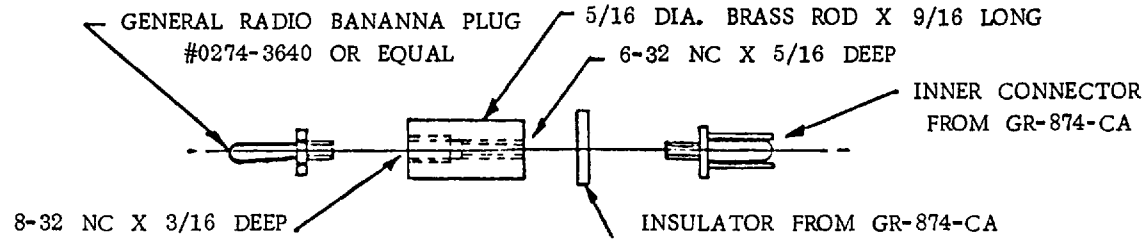

DETAIL "D"

All dimensions in inches.

Fig. A-2

Copyright National Electrical Manufacturers Association
Provided by IHS under license with NEMA
No reproduction or networking permitted without license from IHS
Not for Resale

9009279 0002773 092

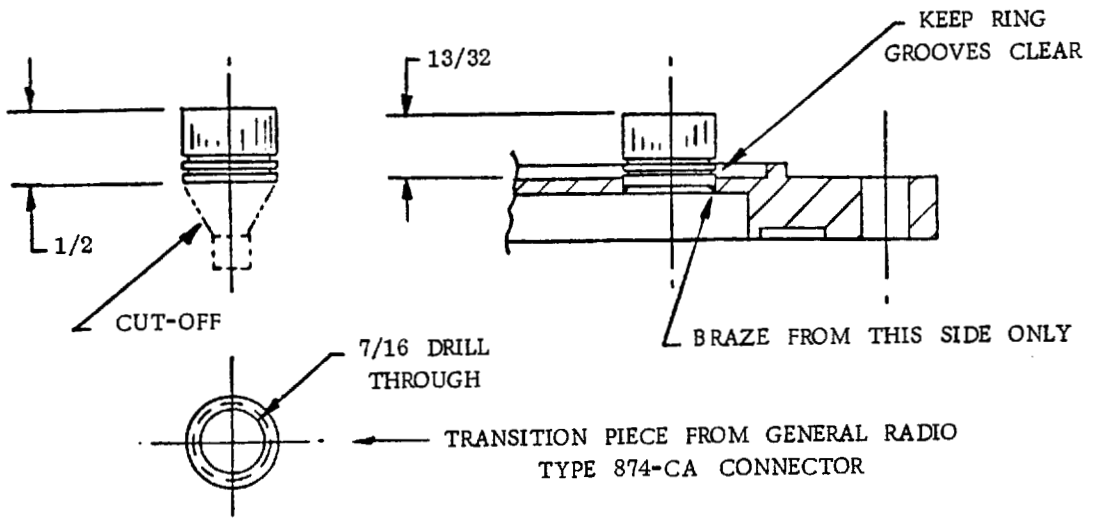

DETAIL "E" NO SCALE

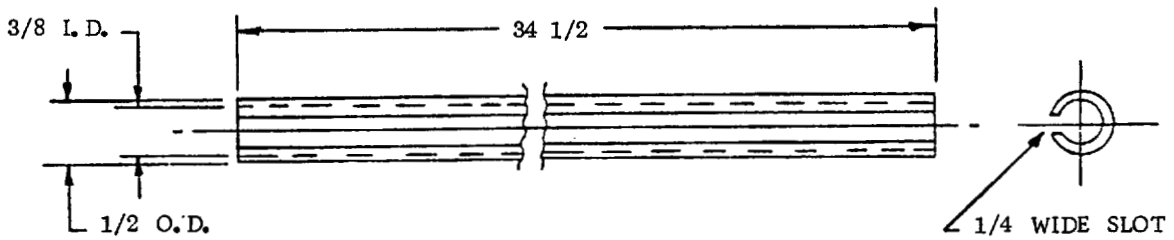

POLYETHYLENE OR ACRYLIC TUBING

DETAIL "F" NO SCALE

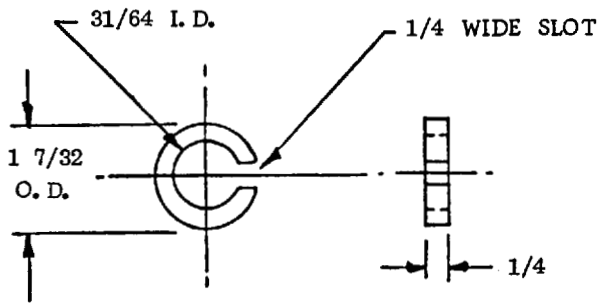

NYLON—3 REQUIRED

DETAIL "G" NO SCALE

All dimensions in inches.

Fig. A-2

Copyright National Electrical Manufacturers Association
Provided by IHS under license with NEMA
No reproduction or networking permitted without license from IHS
Not for Resale

September 1984

NEMA STANDARDIZATION

The purpose of NEMA Standards, their classification and status are set forth in certain clauses of the NEMA Bylaws, which are quoted below:

Purpose of Standards

National Electrical Manufacturers Association Standards are adopted in the public interest and are designed to eliminate misunderstandings between the manufacturer and the purchaser and to assist the purchaser in selecting and obtaining the proper product for its particular need. Existence of a National Electrical Manufacturers Association Standard does not in any respect preclude any member or nonmember from manufacturing or selling products not conforming to the standard.

(Bylaw—Art. V, Sec. 1)

Definition of a Standard

A standard of the National Electrical Manufacturers Association defines a product, process or procedure with reference to one or more of the following: nomenclature, composition, construction, dimensions, tolerances, safety, operating characteristics, performance, rating, testing, and the service for which they are designed.

(Bylaw—Art. V, Sec. 2, Subsection A)

Dimensions

Where dimensions are given for interchangeability purposes, alternate dimensions satisfying the other provisions of the standards publication may be capable of otherwise equivalent performance.

(NEMA Policy Memorandum 84-2, dated June 7, 1984)

Classes of Standards

National Electrical Manufacturers Association Standards are of two classes:

1. NEMA Standard, which relates to a product commercially standardized and subject to repetitive manufacture, which standard has been approved by at least 90 percent of the members of the Subdivision eligible to vote thereon;
2. Suggested Standard for Future Design, which may not have been regularly applied to a commercial product, but which suggests a sound engineering approach to future development, which standard has been approved by at least two-thirds of the members of the Subdivision eligible to vote thereon.

(Bylaw—Art. V, Sec. 2, Subsection B)

Authorized Engineering Information

Authorized Engineering Information consists of explanatory data and other engineering information of an informative character not falling within the classification of NEMA Standard or Suggested Standard for Future Design.

(Bylaw—Art. V, Sec. 6, 1st Sentence)

Official Standards Proposal

An Official Standards Proposal is an official draft of a proposed standard which is formally recommended to an outside organization(s) for consideration, comment and/or approval.

(Bylaw—Art. V, Sec. 4, Subsection A)

Identification of Status

Standards in NEMA Standards Publications are identified in the foreword or following each standard as "NEMA Standard" or "Suggested Standard for Future Design." These indicate the status of the standard. These words are followed by a date which indicates when the standard was adopted in its present form by the Association.

The material identified as "Authorized Engineering Information" and "Official Standards Proposal" is designated similarly.

Copyright National Electrical Manufacturers Association
Provided by IHS under license with NEMA
No reproduction or networking permitted without license from IHS
Not for Resale