NEMA WC*3 80 ■ 6470247 0019341 1 ■

A-33-11

National Electrical Manufacturers Association
2101 L Street, N.W. Suite 300
Washington, D.C. 20037 (202) 457-8400

PROPOSED, NEW AND REVISED STANDARDS

VRS Page 133
December 8, 1989

To: All Representatives of Member Companies in the Power and Control Cable Section

Subject: Revision No. 6 to NEMA Standards Publication for *Rubber-insulated Wire and Cable for the Transmission and Distribution of Electrical Energy,* NEMA Pub. No. **WC 3-1980 (R 1986)**, ICEA Pub. No. **S-19-81**

Dear Representative:

Revision No. 6, consisting of printed pages dated **MAR 1989** and **MAY 1989**, is enclosed for insertion into your copy of the subject publication. Also enclosed is a new title page to indicate that your book now contains Revision No. 6.

To bring your copy up to date, please insert the attached revised pages in their proper place and delete the pages they replace.

Sincerely,

Krystyna McIver
Standards Publications Editor

Encl: Revision No. 6 to **ICEA S-19-81**, NEMA **WC3-1980 (R 1986)**
Copies to: All known holders of **WC 3**.

Copyright National Electrical Manufacturers Association
Provided by IHS under license with NEMA
No reproduction or networking permitted without license from IHS
Not for Resale

WC 3-80 6470247 0006572 T
A-33-11

National Electrical Manufacturers Association
2101 L Street, N.W. Suite 300
Washington, D.C. 20037 (202) 457-8400

PROPOSED, NEW AND REVISED STANDARDS

VRS Page 130
June 13, 1988

TO ALL REPRESENTATIVES OF MEMBER COMPANIES IN THE
POWER AND CONTROL CABLE SECTION

Subject: Revision No. **5** to NEMA Standards Publication for *Rubber-Insulated Wire and Cable for the Transmission and Distribution of Electrical Energy*, NEMA Pub. No. **WC 3-1980 (R 1986)**, ICEA Pub. No. **S-19-81**.

Dear Representative:

Revision No. **5**, consisting of a printed page dated MAY 1988 is enclosed for insertion into your copy of the subject publication. Also enclosed is a new title page to indicate that your book now contains Revision Nos. **1–5** as dated on the title page.

Please note that two pages preceding the MAY 1988 revised copy are enclosed due to an error in the last revision No. 4. These pages, with revisions dated JULY 1987, were mistakenly backed up to unchanged copy instead of the DECEMBER 1984 revised copy which is now enclosed. Please delete these pages from your publication and insert the enclosed copy in its place. Your patience in this matter has been much appreciated.

Thank you.

Sincerely yours,

Krystyna McIver

Krystyna McIver
Standards Editor

cc: Technical Committee
All known holders of WC 3.

Copyright National Electrical Manufacturers Association
Provided by IHS under license with NEMA
No reproduction or networking permitted without license from IHS
Not for Resale

WC 3-80 6470247 0004634 7
A-33-11

National Electrical Manufacturers Association
2101 L Street, N.W. Suite 300
Washington, D.C. 20037 (202) 457-8400

PROPOSED, NEW AND REVISED STANDARDS

VRS Page 129
February 24, 1988

TO ALL REPRESENTATIVES OF MEMBER COMPANIES IN THE
POWER AND CONTROL CABLE SECTION

Subject: Revision No. **4** to NEMA Standards Publication for *Rubber-Insulated Wire and Cable for the Transmission and Distribution of Electrical Energy,* NEMA Pub. No. **WC 3-1980 (R 1986)**, ICEA Pub. No. **S-19-81**.

Dear Representative:

Revision No. **4**, consisting of printed pages dated JULY 1987 is enclosed for insertion into your copy of the subject publication. Also enclosed is a new title page to indicate that your book now contains Revision Nos. **1—4** as dated on the title page.

To bring your copy of ICEA Publication No. S-19-81, WC 3 up to date, please insert the attached revised pages in their proper place and delete the pages they replace.

Sincerely,

Krystyna McIver
Standards Publications Editor
NEMA

Encl: Revision No. **4** to ICEA S-19-81, WC 3-1980 (R 1986).
Copies to: All known holders of WC 3.

Copyright National Electrical Manufacturers Association
Provided by IHS under license with NEMA
No reproduction or networking permitted without license from IHS
Not for Resale

A-33-11

National Electrical Manufacturers Association
2101 L Street, N.W. Suite 300
Washington, D.C. 20037 (202) 457-8400

PROPOSED, NEW AND REVISED STANDARDS

VRS Page 125
March 31, 1987

TO ALL REPRESENTATIVES OF MEMBER COMPANIES IN THE POWER AND CONTROL CABLE SECTION

Subject: Revision No. **3**, to the NEMA Standards Publication for *Rubber-Insulated Wire and Cable for the Transmission and Distribution of Electrical Energy,* NEMA Pub. No. **WC 3-1980 (R 1986), ICEA S-19-81**

Dear Representative:

Reaffirmation and Revision No. **3**, consisting of printed pages dated JUNE 1985 and AUGUST 1986, is enclosed for insertion into your copy of the subject publication. Also enclosed is an undated cover and a new title page to indicate that your book now contains Revision Nos. **1, 2,** and **3** as dated on the title page.

To bring your copy of ICEA Publication No. S-19-81, WC 3 up to date, please insert the attached revised pages in their proper place and delete the pages they replace. Note also that all of 5.6.2 has been deleted, referencing Part 7. Please delete the pages following this reference: Part 5, Pages 2, 3, and 4.

Sincerely,

Krystyna Bagnato

Krystyna Bagnato
Standards Publications Editor
NEMA

Encl: Revision No. **3** to ICEA S-19-81, WC 3-1980 (R1986).
Copies to: All known holders of WC 3.

Copyright National Electrical Manufacturers Association
Provided by IHS under license with NEMA
No reproduction or networking permitted without license from IHS
Not for Resale

WC 3-80 6470247 0004636 0

A-33-11

NATIONAL ELECTRICAL MANUFACTURERS ASSOCIATION

2101 L STREET N.W. WASHINGTON, D.C. 20037

TO ALL REPRESENTATIVES OF MEMBER COMPANIES
IN THE POWER AND CONTROL CABLE SECTION

Subject: Revision No. **2** to the ICEA/NEMA Standards Publication for *Rubber-Insulated Wire and Cable for the Transmission and Distribution of Electrical Energy,* ICEA Publication No. S-19-81 (Sixth Edition), NEMA Publication No. **WC 3-1980**

Dear Representative:

The second set of revised printed pages, dated December 1984, is enclosed for insertion in your copy of the subject publication. These pages will bring your book completely up to date.

A new cover, indicating that your book now includes Revisions 1 and 2, is enclosed. Also, enclosed are a revised checklist of pages and revised pages of the detailed table of contents.

Please insert the revised pages carefully as extra copies are not available.

Sincerely yours,

Carol Cross

Carol Cross
Standards Publications Editor

Copies to: All known holders of WC 3-1980
Technical Committee

CC/fa

Copyright National Electrical Manufacturers Association
Provided by IHS under license with NEMA
No reproduction or networking permitted without license from IHS
Not for Resale
C407

WC 3-80 6470247 0004637 2
A-33-11

NATIONAL ELECTRICAL MANUFACTURERS ASSOCIATION
2101 L STREET N.W. WASHINGTON, D.C. 20037

TO ALL REPRESENTATIVES OF MEMBER COMPANIES
IN THE POWER AND CONTROL CABLE SECTION

Subject: Revision No. 1 to the ICEA/NEMA Standards Publication for *Rubber-Insulated Wire and Cable for the Transmission and Distribution of Electrical Energy*, ICEA Publication No. S-19-81 (Sixth Edition), NEMA Publication No. **WC 3-1980**

Dear Representative:

Revision No. 1 to the subject publication is enclosed for insertion in your copy of the publication. Also, included is a new ICEA/NEMA cover.

Please insert the revised pages carefully as extra copies are not available.

Sincerely yours,

Carol Cross

Carol Cross
Standards Publications Editor

Enclosure

Copies to: All known holders of WC 3-1980

Copyright National Electrical Manufacturers Association
Provided by IHS under license with NEMA
No reproduction or networking permitted without license from IHS
Not for Resale

WC 3-80 6470247 0004638 4

A-33-11

ICEA Publication No. S-19-81
NEMA Publication No. WC 3

icea/nema

Rubber-Insulated Wire and Cable for the Transmission and Distribution of Electrical Energy

NATIONAL ELECTRICAL MANUFACTURERS ASSOCIATION ■ 2101 L STREET, N.W., WASHINGTON, D.C. 20037
INSULATED CABLE ENGINEERS ASSOCIATION ■ PO BOX P, SOUTH YARMOUTH, MA 02664

Copyright National Electrical Manufacturers Association
Provided by IHS under license with NEMA
No reproduction or networking permitted without license from IHS
Not for Resale

ICEA PUB. NO. S-19-81
NEMA WC 3-1980 (R 1986)

WC 3

RUBBER-INSULATED WIRE AND CABLE FOR THE TRANSMISSION AND DISTRIBUTION OF ELECTRICAL ENERGY

Revision No. 1—January 1983
Revision No. 2—December 1984
Revision No. 3—August 1986
Revision No. 4—July 1987
Revision No. 5—May 1988
Revision No. 6—May 1989

Approved by Insulated Cable Engineers Association , Inc.

Published by

National Electrical Manufacturers Association
2101 L Street, N.W.
Washington, D.C. 20037

©1989 by National Electrical Manufacturers Association

Copyright National Electrical Manufacturers Association
Provided by IHS under license with NEMA
No reproduction or networking permitted without license from IHS

Not for Resale

Foreword

This Standards Publication for Insulated Wire and Cable for the Transmission and Distribution of Electrical Energy was developed by the Insulated Cable Engineers Association and approved by the National Electrical Manufacturers Association.

ICEA/NEMA Standards are adopted in the public interest and are designed to eliminate misunderstanding between the manufacturer and the user and to assist the user in selecting and obtaining the proper product for his particular need. Existence of an ICEA/NEMA Standard does not in any respect preclude the manufacture or use of products not conforming to the standard. The user of this standard is cautioned to observe any health or safety regulations and rules relative to the manufacture and use of cable made in conformity with this standard.

Requests for interpretation of this standard must be submitted in writing to the Insulated Cable Engineers Association, P.O. Box P, South Yarmouth, Massachusetts 02664. An official written interpretation will be provided. Suggestions for improvements gained in the use of this publication will be welcomed by the Association.

TABLE OF CONTENTS—CONDENSED•▲

Part 1 General
Part 2 Conductors
Part 3 Insulation
Part 4 Shielding and Coverings
Part 5 Assembly, Fillers and Conductor Identification
Part 6 Testing and Test Methods
Part 7 Constructions of Specific Types
Part 8 Appendices

• A more detailed Table of Contents follows.

Throughout text, please read "kcmil" wherever text says "MCM". The preferred "kcmil" will be inserted as revisions are made to other text on a page. ●

For the sake of uniformity, all appendices in NEMA WC 3-1980 (ICEA S-19-81 Sixth Edition), NEMA WC 5-1973 (R 1979) (ICEA S-61-402 Third Edition), NEMA WC 7-1982 (ICEA S-66-524 Second Edition), and NEMA WC 8-1976 (R 1982) (ICEA S-68-516) are lettered the same. ●

▲ Editorially revised.
● Added editorially.

Copyright National Electrical Manufacturers Association
Provided by IHS under license with NEMA
No reproduction or networking permitted without license from IHS
Not for Resale

Table of Contents—Detailed ▲

	Paragraph	Part	Page
GENERAL			
Scope	1.1	1	1
General Information	1.2	1	1
Information to be Supplied by Purchaser	1.3	1	1
Characteristics of System on Which Cable is to be Used	1.3.1	1	1
Quantities and Description of Cable	1.3.2	1	1
CONDUCTORS			
Wires, Physical and Electrical Properties	2.1	2	1
Copper Wires	2.1.1	2	1
Aluminum Wires	2.1.2	2	1
Solid Conductors	2.2	2	1
Stranded Conductors	2.3	2	1
Conductor Size Units	2.4	2	2
Conductor dc Resistance Per Unit Length	2.5	2	2
Direct Measurement of dc Resistance Per Unit Length	2.5.1	2	2
Calculation of dc Resistance Per Unit Length	2.5.2	2	3
Conductor Diameter	2.6	2	3
Stress Control Layer (Conductor Shield)	2.7	2	4
INSULATION			
Material	3.1	3	1
Insulation Thicknesses	3.2	3	1
Additional Insulation Thickness for Nonsheathed Submarine Cables	3.3	3	1
Series Lighting Circuits	3.4	3	1
Repairs	3.5	3	1
Insulation Grades and Requirements	3.6	3	2
Grades and General Characteristics	3.6.1	3	2
Voltage Tests	3.6.2	3	2
Insulation Resistance Constants	3.6.3	3	2
Synthetic Rubber 60°C	3.7	3	7
Physical and Aging Requirements	3.7.1	3	7
Electrical Requirements	3.7.2	3	7
Voltage Tests	3.7.2.1	3	7
Insulation Resistance Test	3.7.2.2	3	7
Synthetic Rubber, Moisture Resisting, 60°C	3.8	3	7
Physical and Aging Requirements	3.8.1	3	7
Electrical Requirements	3.8.2	3	7
Voltage Tests	3.8.2.1	3	7
Insulation Resistance Test	3.8.2.2	3	7
Accelerated Water Absorption Requirements	3.8.3	3	8

2474

Copyright National Electrical Manufacturers Association
Provided by IHS under license with NEMA editorially revised.
No reproduction or networking permitted without license from IHS

Not for Resale

Table of Contents—Detailed (Continued)

	Paragraph	Part	Page
INSULATION (Continued)			
Natural Rubber 60 °C	3.9	3	8
Physical and Aging Requirements	3.9.1	3	8
Electrical Requirements	3.9.2	3	8
Voltage Tests	3.9.2.1	3	8
Insulation Resistance Tests	3.9.2.2	3	8
Synthetic Rubber 75 °C	3.10	3	8
Physical and Aging Requirements	3.10.1	3	8
Electrical Requirements	3.10.2	3	8
Voltage Tests	3.10.2.1	3	8
Insulation Resistance Test	3.10.2.2	3	8
Synthetic Rubber, Heat Resisting 75 °C or Moisture Resisting 60 °C	3.11	3	9
Physical and Aging Requirements	3.11.1	3	9
Electrical Requirements	3.11.2	3	9
Voltage Tests	3.11.2.1	3	9
Insulation Resistance Test	3.11.2.2	3	9
Accelerated Water Absorption Requirements	3.11.3	3	9
Natural Rubber 75 °C	3.12	3	9
Physical and Aging Requirements	3.12.1	3	9
Electrical Requirements	3.12.2	3	10
Voltage Tests	3.12.2.1	3	10
Insulation Resistance Test	3.12.2.2	3	10
Synthetic Rubber, Heat and Moisture Resisting, 75 °C	3.13	3	10
Physical and Aging Requirements	3.13.1	3	10
Electrical Requirements	3.13.2	3	10
Voltage Tests	3.13.2.1	3	10
Insulation Resistance Test	3.13.2.2	3	10
Accelerated Water Absorption Requirements	3.13.3	3	10
Ozone-resisting Natural or Synthetic Rubber	3.14	3	10
Physical and Aging Requirements	3.14.1	3	10
Electrical Requirements	3.14.2	3	11
Voltage Tests	3.14.2.1	3	11
Insulation Resistance Test	3.14.2.2	3	11
Partial-discharge Extinction Level	3.14.2.3	3	11
Requirements for Tests on Samples	3.14.3	3	11
Short-time Dielectric Strength Test	3.14.3.1	3	11
Cold-bending and Long-time Dielectric Strength Test	3.14.3.2	3	11
Capacity and Power Factor	3.14.3.3	3	11
Ozone Resistance	3.14.3.4	3	11
Accelerated Water Absorption	3.14.3.5	3	11
Ozone-resisting Butyl Rubber	3.15	3	11
Physical and Aging Requirements	3.15.1	3	11
Electrical Requirements	3.15.2	3	12
Voltage Tests	3.15.2.1	3	12
Insulation Resistance Test	3.15.2.2	3	12
Partial-discharge Extinction Level	3.15.2.3	3	12
Requirements for Tests on Samples	3.15.3	3	12
Capacity and Power Factor	3.15.3.1	3	12
Ozone Resistance	3.15.3.2	3	12
Accelerated Water Absorption	3.15.3.3	3	12

Copyright National Electrical Manufacturers Association
Provided by IHS under license with NEMA
No reproduction or networking permitted without license from IHS

Not for Resale

WC 3-80 6470247 0004643 8

Table of Contents—Detailed (Continued)

INSULATION (Continued)	PARAGRAPH	PART	PAGE
Synthetic Rubber 90°C	3.16	3	12
Physical and Aging Requirements	3.16.1	3	12
Electrical Requirements	3.16.2	3	13
Voltage Tests	3.16.2.1	3	13
Insulation Resistance Test	3.16.2.2	3	13
Ozone-resisting Silicone Rubber	3.17	3	13
Physical and Aging Requirements	3.17.1	3	13
Electrical Requirements	3.17.2	3	13
Voltage Tests	3.17.2.1	3	13
Insulation Resistance Test	3.17.2.2	3	13
Partial-discharge Extinction Level	3.17.2.3	3	13
Requirements for Tests on Samples	3.17.3	3	13
Ozone Resistance	3.17.3.1	3	13
Accelerated Water Absorption	3.17.3.2	3	13
Chlorosulfonated Polyethylene	3.18	3	14
Physical and Aging Requirements	3.18.1	3	14
Electrical Requirements	3.18.2	3	14
Voltage Tests	3.18.2.1	3	14
Insulation Resistance Test	3.18.2.2	3	14
Requirements for Tests on Samples	3.18.3	3	14
Accelerated Water Absorption	3.18.3.1	3	14
Flame Resistance for Sizes 14 AWG and Larger	3.18.3.2	3	14

SHIELDING AND COVERINGS			
Shielding of Insulated Cable	4.1	4	1
Shielding Limits for Power Cable for Fixed Locations	4.2	4	1
Coverings—General	4.3	4	4
Number of Coverings for Single-conductor Wires and Cables	4.3.1	4	4
Covering of Twin Wires and Multiple-conductor Power Cables	4.3.2	4	4
Identification of Multiple-conductor Control Cable	4.3.3	4	4
Tapes	4.4	4	4
Compound-filled Tape	4.4.1	4	4
Application	4.4.2	4	4
Cotton Braids	4.5	4	4
Classes of Braids	4.5.1	4	4
Materials	4.5.2	4	4
Angle of Braid	4.5.3	4	4
Thickness of Cotton Braid	4.5.4	4	4
Carriers, Ends and Picks	4.5.5	4	5
Measurements of Braids	4.5.6	4	6
Cotton Wraps or Servings	4.6	4	6
Materials	4.6.1	4	6
Angle of Servings	4.6.2	4	6
Double Servings	4.6.3	4	6
Construction of Servings	4.6.4	4	6
Saturants and Finishes	4.7	4	14
Indoor and Conduit Installations	4.8	4	14
Flame-retarding Requirements	4.8.1	4	14
Moisture-resisting Requirements	4.8.2	4	14
Bending Requirements	4.8.3	4	14
Methods of Test	4.8.4	4	14

Copyright National Electrical Manufacturers Association
Provided by IHS under license with NEMA
No reproduction or networking permitted without license from IHS

Not for Resale

Table of Contents—Detailed (Continued)

SHEILDING AND COVERINGS (Continued)	PARAGRAPH	PART	PAGE
Aerial and Outdoor Installations	4.9	4	14
Saturant	4.9.1	4	14
Finish	4.9.2	4	14
Mineral Filler	4.9.3	4	15
Bending Requirements	4.9.4	4	15
Melting Requirement	4.9.5	4	15
Dripping Requirement	4.9.6	4	15
Finish of Identification Coverings for Individual Conductors of Multiple-conductor Cables	4.10	4	15
Nonmetallic Jackets—General	4.11	4	15
Composite Jackets	4.12	4	15
Bending Requirement	4.12.1.1	4	15
Moisture-absorption Requirement	4.12.1.2	4	15
Rubber or Thermoplastic Jackets	4.13	4	15
Natural Rubber	4.13.1	4	15
Synthetic Rubber	4.13.2	4	16
Neoprene, Heavy-duty Black	4.13.3	4	16
Neoprene, General Purpose	4.13.4	4	16
Polyvinyl Chloride	4.13.5	4	16
Polyethylene, Black	4.13.6	4	16
Chlorinated Polyethylene, Thermoplastic	4.13.7	4	17
Nitrile-butadiene/Polyvinyl-chloride, Heavy Duty	4.13.8	4	17
Nitrile-butadiene/Polyvinyl-chloride, General-purpose Duty	4.13.9	4	17
Chlorosulfonated Polyethylene, Heavy Duty	4.13.10	4	17
Chlorinated Polyethylene, Heavy-Duty, Cross-Linked	4.13.11	4	17
Jacket Thicknesses	4.13.12	4	18
Separator Under Jacket	4.13.13	4	18
Discharge-resisting Jackets	4.13.14	4	18
Spark Test of Jackets Over Metallic Shielded Power Cable	4.13.15	4	18
Metallic and Associated Coverings	4.14	4	20
Scope	4.14.1	4	20
General	4.14.2	4	20
Unusual Conditions	4.14.2.1	4	20
Types of Metallic Coverings	4.14.2.2	4	20
Division I Coverings for Insulated Cables			
Scope	4.14.3	4	20
Metallic Sheath	4.14.4	4	21
Type of Lead	4.14.4.1	4	21
Thickness of Lead	4.14.4.2	4	21
Measurement of Thickness of Lead	4.14.4.3	4	21
Reapplication of Lead Sheaths	4.14.4.4	4	21
Type of Aluminum	4.14.4.5	4	21
Thickness of Aluminum	4.14.4.6	4	21
Measurement of Thickness of Aluminum	4.14.4.7	4	22
Reapplication of Aluminum Sheaths	4.14.4.8	4	22
Jute Serving over Metallic Sheath without Metallic Armor	4.14.5	4	22
Jute Servings	4.14.5.1	4	22
Application	4.14.5.2	4	22
Flat Metal Tape Armor	4.14.6	4	22
Scope	4.14.6.1	4	22
Tensile Strength and Elongation	4.14.6.2	4	22
Galvanizing Test	4.14.6.3	4	22
Width	4.14.6.4	4	23
Thickness	4.14.6.5	4	23
Application, Lay and Spacing	4.14.6.6	4	23

Copyright National Electrical Manufacturers Association
Provided by IHS under license with NEMA
No reproduction or networking permitted without license from IHS
Not for Resale

WC 3-80 6470247 0006575 5

Table of Contents—Detailed (Continued)

	Paragraph	Part	Page
SHIELDING AND COVERINGS (Continued)			
Metallic and Associated Coverings (Continued)			
Division I Coverings for Insulated Cables (Continued)			
Interlocked Metal Tape Armor	4.14.7	4	23
Scope	4.14.7.1	4	23
Steel Tape	4.14.7.2	4	23
Width	4.14.7.3	4	23
Thickness	4.14.7.4	4	24
Nonmagnetic Tape	4.14.7.5	4	24
Continuously Corrugated Metal Armor	4.14.7a	4	24
Scope	4.14.7a.1	4	24
Type of Metal	4.14.7a.2	4	24
Flexibility	4.14.7a.3	4	24
Corrosion Protection	4.14.7a.4	4	24
Galvanized Steel Wire Armor	4.14.8	4	24A
Scope	4.14.8.1	4	24A
Tensile Strength, Elongation and Torsion	4.14.8.2	4	24A
Galvanizing Tests	4.14.8.3	4	24A
Size of Armor	4.14.8.4	4	25
Lay	4.14.8.5	4	25
Direction of Lay	4.14.8.6	4	25
Jute Bedding for Armored Cable	4.14.9	4	26
Application	4.14.9.1	4	26
Direction of Lay	4.14.9.2	4	26
Thickness	4.14.9.3	4	26
Jute Serving Overall for Armored Cable	4.14.10	4	26
Application	4.14.10.1	4	26
Direction of Lay	4.14.10.2	4	26
Jute for Interlocked Armored Cable	4.14.11	4	26
Jute Bedding	4.14.11.1	4	26
Jute Serving Overall	4.14.11.2	4	26
Core Covering for Nonsheathed and Nonjacketed Cable with Metallic Armor	4.14.12	4	26
Core Covering	4.14.12.1	4	26
Compound-filled Tape	4.14.12.2	4	26
Core Covering for Thermosetting and Thermoplastic Jacketed Cable under Armor	4.14.13	4	27
Flat Steel Tape Armor	4.14.13.1	4	27
Interlocked Armor	4.14.13.2	4	27
Round Wire Armor	4.14.13.3	4	27
Thermosetting Jackets over Metallic Sheath	4.14.14	4	27
Thermosetting Jacket	4.14.14.1	4	27
Thickness	4.14.14.2	4	27
Thickness of Lead Sheath	4.14.14.3	4	27
Thickness of Aluminum Sheath	4.14.14.4	4	27
Thermoplastic Jackets over Metallic Sheath	4.14.15	4	28
Thermoplastic Jackets	4.14.15.1	4	28
Thickness	4.14.15.2	4	28
Tightness of Application of Polyethylene Jackets to Sheath	4.14.15.3	4	28
Cold Bend	4.14.15.4	4	28
Spark Test	4.14.15.5	4	28
Thickness of Lead Sheath	4.14.15.6	4	28
Thickness of Aluminum Sheath	4.14.15.7	4	28
Jackets over Metallic Armor	4.14.16	4	29
Thermoplastic Types	4.14.16.1	4	29
Crosslinked Types	4.14.16.2	4	29
Thickness	4.14.16.3	4	29
Irregularity Inspection	4.14.16.4	4	29

Copyright National Electrical Manufacturers Association
Provided by IHS under license with NEMA
No reproduction or networking permitted without license from IHS
Not for Resale

WC 3-80 6470247 0004646 3

Table of Contents—Detailed (Continued)

	Paragraph	Part	Page
SHIELDING AND COVERINGS (Continued)			
Metallic and Associated Coverings (Continued)			
Division II Round Wire Armor for Borehole, Dredge, Shaft, and Vertical Riser Cable			
Scope	4.14.17	4	29
General	4.14.18	4	29
Borehole Cable (Suspended at One End Only)	4.14.19	4	29
Armor	4.14.19.1	4	29
Size of Armor Wire	4.14.19.2	4	29
Lay	4.14.19.3	4	29
Dredge Cable	4.14.20	4	30
Armor	4.14.20.1	4	30
Size of Armor Wire	4.14.20.2	4	30
Pitch Ratio	4.14.20.3	4	30
Shaft Cable	4.14.21	4	30
Vertical Riser Cable (Suspended at One End Only)	4.14.22	4	30
Nonsheathed Cable for Installation within Buildings	4.14.22.1	4	30
Size of Armor Wire for Sheathed Cable	4.14.22.2	4	30
Wire-band Serving	4.14.23	4	30
Division III Round Wire Armor for Buried Cable			
Scope	4.14.24	4	31
General	4.14.25	4	31
Armor Wire and Jute Servings (Sheathed and Nonsheathed Cables)	4.14.26	4	31
ASSEMBLY, FILLERS, BINDERS, AND CONDUCTOR IDENTIFICATION			
Assembly of Multiple-conductor Cables	5.1	5	1
Multiple-conductor Round Cables	5.2	5	1
Flat Twin Cables	5.3	5	1
Fillers	5.4	5	1
Binder	5.5	5	1
Conductor Identification	5.6	5	1
Power Cables	5.6.1	5	1
Control Cables	5.6.2	5	1
Individual Color Coding of Braidless Conductors	5.6.2.1	5	1
Colored Compounds with Tracers	5.6.2.1.1	5	1
Neutral Colored Compounds with Tracers	5.6.2.1.2	5	3
Neutral or Single-color Compounds with Surface Printing of Numbers and Color Designations	5.6.2.1.3	5	3
Neutral or Single-color Compounds with Surface Printing of Numbers	5.6.2.1.4	5	3
Individual Color Coding with Braids	5.6.2.2	5	3
Layer Identification	5.6.2.3	5	4
Color Coding of Paired Conductors	5.6.2.4	5	4

Copyright National Electrical Manufacturers Association
Provided by IHS under license with NEMA
No reproduction or networking permitted without license from IHS
Not for Resale

Table of Contents—Detailed (Continued)

TESTING AND TEST METHODS	PARAGRAPH	PART	PAGE
Testing	6.1	6	1
Tests on Samples	6.2	6	1
Conductor Test Methods	6.3	6	1
Method for Direct-current Resistance Determination	6.3.1	6	1
Methods for Cross-sectional Area Determination	6.3.2	6	1
Methods for Diameter Determination	6.3.3	6	3
Diameter by Micrometer Measurement	6.3.3.1	6	3
Diameter by Tape Measurement	6.3.3.2	6	3
Test Samples and Specimens for Physical and Aging Tests	6.4	6	3
General	6.4.1	6	3
Number of Thickness Measurements	6.4.2	6	3
Measurement of Thickness	6.4.3	6	3
Sampling of Insulation for Physical and Aging Tests	6.4.4	6	5
Sampling of Jacket for Physical and Aging Tests	6.4.5	6	5
Number of Test Specimens	6.4.6	6	5
Size of Specimens	6.4.7	6	5
Preparation of Specimens of Insulation and Jacket	6.4.8	6	5
Specimens with Thin Jackets Vulcanized to Insulation	6.4.9	6	5
Specimen for Tear Test	6.4.10	6	6
Specimen for Accelerated Aging Test	6.4.11	6	6
Calculation of Area of Test Specimens	6.4.12	6	6
Physical Test Procedures	6.4.13	6	6
Test Temperature	6.4.13.1	6	6
Type of Testing Machine	6.4.13.2	6	7
Tensile Strength Test	6.4.13.3	6	7
Set Test	6.4.13.4	6	7
Elongation Test	5.4.13.5	6	7
Tensile Stress Test	6.4.13.6	6	7
Tear Test	6.4.13.7	6	7
Cold Bend Test	6.4.13.8	6	7
Aging Test	6.4.14	6	7
Aging Test Specimens	6.4.14.1	6	7
Oxygen Pressure Test	6.4.14.2	6	8
Air Oven Test	6.4.14.3	6	8
Air Pressure Heat Test	6.4.14.4	6	8
Oil Immersion Test for Thermosetting Jacket	6.4.14.5	6	8
Oil Immersion Test for Polyvinyl Chloride Jacket	6.4.14.6	6	8
Physical Tests for Semiconducting Material Intended for Extrusion	6.4.15	6	8
Test Sample	6.4.15.1	6	8
Test Specimens	6.4.15.2	6	8
Elongation	6.4.15.3	6	8
Brittleness Test	6.4.15.4	6	8
Retests for Physical and Aging Properties and Thickness	6.4.16	6	9
Short-time Dielectric Strength Test on Insulated Conductors	6.5	6	9
Cold Bending and Long-time Dielectric Strength Test	6.6	6	9
Capacity and Power Factor Tests	6.7	6	10
Ozone Resisting Test	6.8	6	10
Samples	6.8.1	6	10
Test Apparatus	6.8.2	6	10
Test Specimens	6.8.3	6	11
Test Procedure	6.8.4	6	12
Determination of Ozone Concentration	6.8.5	6	12
Chemical Analysis	6.8.5.1	6	12
Direct Measurement with an Ozonometer	6.8.5.2	6	13
Accelerated Water Absorption Tests	6.9	6	15
Electrical Method	6.9.2	6	15

Copyright National Electrical Manufacturers Association
Provided by IHS under license with NEMA
No reproduction or networking permitted without license from IHS

Not for Resale

Table of Contents—Detailed (Continued)

TESTING AND TEST METHODS (Continued)	PARAGRAPH	PART	PAGE
Thickness of Tapes	6.10	6	15
Compound-filled Tape	6.10.1	6	15
Metallic Shielding Tape or Steel Tape	6.10.2	6	15
Measurements of Braids	6.11	6	16
Determination of Yarn Size of Wraps	6.12	6	17
Braided Cables for Indoor Installations	6.13	6	17
Sampling of Cable for Tests	6.13.1	6	17
Horizontal Flame Test	6.13.2	6	18
Moisture and Bending Tests of Fibrous Coverings	6.13.3	6	18
Saturant for Fibrous Covering for Aerial Cables	6.14	6	19
Braided Cables for Outdoor Installations	6.15	6	20
Sampling of Cable for Tests	6.15.1	6	20
Mineral Filler Content	6.15.2	6	20
Bending Test	6.15.3	6	20
Melting Test	6.15.4	6	21
Dripping Test	6.15.5	6	21
Fibrous or Composite Jackets	6.16	6	21
Test Samples	6.16.1	6	21
Bending Test	6.16.2	6	21
Moisture Absorption Test	6.16.3	6	21
Thickness of Metallic Sheaths	6.17	6	21
Thickness of Jute Beddings and Servings	6.18	6	21
Tests for Thermoplastic Jackets	6.19	6	22
Heat Shock	6.19.1	6	22
Heat Distortion	6.19.2	6	22
Cold Bend	6.19.3	6	22
Environmental Cracking	6.19.4	6	22
Absorption Coefficient Test for Jackets	6.19.5	6	23
Flame Test	6.19.6	6	23
Tests for Discharge-resisting Jackets	6.20	6	23
Surface Resistivity	6.20.1	6	23
U-bend Discharge	6.20.2	6	24
Volume Resistivity	6.21	6	24
Test Sample	6.21.1	6	24
Conductor Stress Control	6.21.2	6	24
Insulation Shield	6.21.3	6	24
Stripping Test	6.22	6	24
Retests for Tests on Samples	6.23	6	25
Electrical Tests on Completed Cables			
Voltage Tests	6.24	6	25
General	6.24.1	6	25
Alternating-current Voltage Test	6.24.2	6	25
Direct-current Voltage Test	6.24.3	6	25
Alternating-current Spark Test	6.24.4	6	25
Application	6.24.4.1	6	25
Test Apparatus	6.24.4.2	6	25
Test Procedure	6.24.4.3	6	25
Failure	6.24.4.4	6	26
Direct-current Spark Test	6.24.5	6	26
Fibrous-covered Cables without Metallic Sheath, Metallic Shield, or Metallic Armor	6.24.6	6	26
Jacketed Cables without Metallic Sheath, Metallic Shield, or Metallic Armor	6.24.7	6	26
Cables with Metallic Sheath, Metallic Shield, or Metallic Armor	6.24.8	6	26
Voltage Tests After Installation	6.24.9	6	26

Copyright National Electrical Manufacturers Association
Provided by IHS under license with NEMA
No reproduction or networking permitted without license from IHS
Not for Resale

Table of Contents—Detailed (Continued)

TESTING AND TEST METHODS (Continued)	PARAGRAPH	PART	PAGE
Electrical Tests on Completed Cables (Continued)			
Insulation Resistance	6.25	6	26
Test Apparatus	6.25.1	6	26
Test Procedure	6.25.2	6	26
Determination of Temperature Correction Factors for Insulation Resistance	6.25.3	6	28
Partial Discharge Test Procedure	6.26	6	28
Method for Flexibility Test for Continuously Corrugated Armor	6.27	6	28
Method for Determining Permittivity (S.I.C.) and Dielectric Strength of Extruded Nonconducting Polymeric Stress Control Layers	6.28	6	28
CONSTRUCTIONS OF SPECIFIC TYPES			
Mine Power Cables	7.2	7	1
Scope	7.2.1	7	1
Conductors	7.2.2	7	1
Insulation	7.2.3	7	2-4
Insulation Shielding	7.2.4	7	2-4
Identification	7.2.5	7	2-4
Conductor Assembly	7.2.6	7	2-4
Jacket	7.2.7	7	2-4
Outside Diameters	7.2.8	7	2-4
Tests	7.2.9	7	2-4
Preassembled Aerial Cable	7.3	7	8
Scope	7.3.1	7	8
Conductors	7.3.2	7	8
Insulation	7.3.3	7	8
Coverings	7.3.4	7	8
Conductor Identification	7.3.5	7	10
Assembly	7.3.6	7	10
Messenger Sizes	7.3.7	7	10
Design Criteria	7.3.8	7	10
Tests	7.3.9	7	10
Neutral-supported Secondary and Service Drop Cable	7.4	7	11
Scope	7.4.1	7	11
Conductors	7.4.2	7	11
Insulation—Physical and Aging Requirements	7.4.3	7	12
Assembly	7.4.4	7	12
Tests	7.4.5	7	12
Portable Arc-welding Cables	7.5	7	13
Scope	7.5.1	7	13
Conductors	7.5.2	7	13
Separator	7.5.3	7	13
Jackets	7.5.4	7	14
Number of Wires, Outside Diameters, and Diameter Tolerances	7.5.5	7	15

Copyright National Electrical Manufacturers Association
Provided by IHS under license with NEMA
No reproduction or networking permitted without license from IHS

Not for Resale

Table of Contents—Detailed (Continued)

CONSTRUCTIONS OF SPECIFIC TYPES (Continued)	PARAGRAPH	PART	PAGE
Portable Single- and Multiple-conductor Power Cables	7.6	7	16
Scope	7.6.1	7	16
General Description of Completed Cable			
Single-conductor Cable, Nonshielded	7.6.2	7	16
Two-conductor Cable	7.6.3	7	16
Three- and Four-conductor Cables	7.6.4	7	16
Shielded Cables	7.6.5	7	17
Five- and Six-conductor 600-volt Cables	7.6.6	7	17
Type PG, Two and Three Power Conductor with Single Grounding Conductor, 600 Volts	7.6.7	7	18
Type PGC, Two and Three Power Conductor with Control Conductors and Single Grounding Conductor, 600 Volts	7.6.8	7	18
Single-conductor Nonshielded Cables for Temporary Grounding of Overhead Lines	7.6.9	7	18
Power Conductors	7.6.10	7	18
Control and Ground Check Conductors	7.6.11	7	18
Grounding Conductors	7.6.12	7	18
Insulation	7.6.13	7	19
Electrical Tests	7.6.14	7	19
Tapes and Braids	7.6.15	7	19
Conductor Identification	7.6.16	7	19
Shielding	7.6.17	7	20
Conductor Assembly	7.6.18	7	20
Jackets	7.6.19	7	20
Completed Cable	7.6.20	7	21
Marking	7.6.21	7	22
Tests	7.6.22	7	22
Single- and Multiple-conductor Flexible Cords	7.7	7	37
Scope	7.7.1	7	37
Conductors	7.7.2	7	37
Insulation	7.7.3	7	37
Conductor Assembly	7.7.4	7	38
Jackets	7.7.5	7	38
Overall Diameters	7.7.6	7	39
Strength of Completed Cord	7.7.7	7	39
Tests	7.7.8	7	39
Control Cables	7.8	7	42
Scope	7.8.1	7	42
Conductors	7.8.2	7	42
Insulation	7.8.3	7	42
Covering Over Insulation for Multiple-conductor Cables	7.8.4	7	42
Conductor Identification	7.8.5	7	43
Assembly	7.8.6	7	43
Jackets and Coverings	7.8.7	7	43
Tests	7.8.8	7	44

Copyright National Electrical Manufacturers Association
Provided by IHS under license with NEMA
No reproduction or networking permitted without license from IHS
Not for Resale

Table of Contents—Detailed (Continued)

CONSTRUCTIONS OF SPECIFIC TYPES (Continued)	PARAGRAPH	PART	PAGE
Metal-clad Cables with Grounding Conductors	7.10	7	46
Scope	7.10.1	7	46
Conductors	7.10.2	7	46
Conductor Shielding	7.10.3	7	46
Insulation	7.10.4	7	46
Insulation Shielding	7.10.5	7	46
Covering	7.10.6	7	46
Assembly	7.10.7	7	46
Armor	7.10.8	7	46
Tests	7.10.9	7	46
Nonshielded Single-conductor Power Cable	7.11	7	47
Scope	7.11.1	7	47
Conductors	7.11.2	7	47
Insulation	7.11.3	7	47
Jacket	7.11.4	7	47
Length of Lay	7.11.5	7	47
Tests	7.11.6	7	47

APPENDICES	APPENDIX		
Abbreviations and Symbols	A	8	1
Representative Tensile Strength and Elongation of Nonmagnetic Metals	B	8	1
Definitions for Maximum Temperatures of Conductors in Insulated Wire and Cable	C	8	1
Emergency Overload Ratings for Rubber-Insulated Cables	D	8	1
Referenced ICEA Publications and ASTM Standards	E	8	2
Shielding	G	8	3
Recommended Bending Radii for Cables	H	8	4
Ampacities for Three-Conductor Mine Power Cables 2001 to 1500 Volts Copper and Aluminum	I	8	6
Ampacities and Voltage Ratings of Portable Cables	J	8	7
Additional Conductor Information	L	8	8
Ampacities for Preassembled Aerial Cables	M	8	16
Flexible Cords and Remote Control and Drill Cords	N	8	17
Jacket Thicknesses for Portable Cables Not Covered by Tables 7.6-2 and 7.6-13	O	8	18

NOTE: Appendices F and K not included.

Copyright National Electrical Manufacturers Association
Provided by IHS under license with NEMA
No reproduction or networking permitted without license from IHS

Not for Resale

Part 1
GENERAL

1.1 SCOPE ▲

These standards apply to materials, constructions, and testing of cross-linked rubber-insulated wires and cables which are used for the transmission and distribution of electrical energy for normal conditions of installation and service, either indoors, aerial, underground, or submarine.

In classifying cross-linked insulations and jackets in these standards, the term "rubber" when used alone without further description shall mean either natural rubber or synthetic rubber, or a combination of these materials.

1.2 GENERAL INFORMATION ▲

These standards cover the requirements for conductors, the insulations and protective coverings, and general constructional and dimensional details common to most standard types of wires and cables. Constructions of specific types are covered in Part 7. Where a conflict exists between the requirements of Part 7 and those of Parts 1 to 6, inclusive, the requirements of Part 7 shall apply. See Appendix E for complete titles and dates of ICEA publications and ASTM Standards to which reference is made in this publication. See Part 6 for test procedures not elsewhere referenced.

Insulation thicknesses are designated in terms of cable insulation levels (see 3.2).

In classifying jackets and sheaths in these standards, the term "jacket" refers to a continuous nonmetallic covering and "sheath" to a continuous metallic covering.

In these standards, units are expressed in the English system. For information only, their approximate metric equivalents are included.

1.3 INFORMATION TO BE SUPPLIED BY PURCHASER*

When requesting proposals from cable manufacturers, the prospective purchaser should furnish the following information:

1.3.1 Characteristics of System on Which Cable is to be Used ▲

1. Current—alternating or direct.
2. Frequency—hertz.
3. Normal operating voltage between phases or, if direct current, between conductors.
4. Number of phases and conductors. If series lighting, give open-circuit voltage and state whether system is operated with or without protectors.
5. Cable insulation level (see 3.2).
6. Minimum temperature at which cable will be installed.
7. Description of installation.
   a. In buildings.
   b. In underground ducts.
   c. Aerial.
      (1) On messenger in metal rings.
      (2) On messenger with marlin ties.
      (3) Preassembled.
      (4) Field spun.
   d. Direct burial in ground.
   e. Submarine.
   f. Descriptions other than the foregoing.
8. Conditions of installations.
   a. Ambient temperature.
   b. Number of loaded cables in duct bank or conduit. If in conduit, give type of conduit (metallic or nonmetallic), number of loaded conduits, enclosed or exposed, and spacing between conduits.
   c. Load factor.
   d. Method of bonding and grounding of metallic coverings (including shields).
   e. Wet or dry location.
   f. Thermal resistivity (rho) of soil.

1.3.2 Quantities and Description of Cable

1. Total number of feet, including test lengths, and lengths if specific lengths are required.
2. Type of cable. Describe as single conductor, two-conductor flat, two-conductor round, etc.
3. Rated circuit voltage, phase to phase.
4. Type of conductor—copper or aluminum.
5. Size of conductor—AWG or circular mils. If conditions require other than standard stranding, a complete description should be given.
▲6. Insulation.
7. Thickness of insulation in mils.
8. Type of outer covering.
9. Maximum allowable overall diameter in inches. When duct space is not limited, it is desirable not to restrict the overall diameter.
10. Method of conductor identification.

* This paragraph has been approved by NEMA as Authorized Engineering Information.

▲ Editorially revised.

Copyright National Electrical Manufacturers Association
Provided by IHS under license with NEMA
No reproduction or networking permitted without license from IHS

Part 2
CONDUCTORS

2.0 Requirements of a referenced ASTM standard shall be determined in accordance with the procedure or method designated in the referenced ASTM standard unless otherwise specified in the standard.

The following technical information on typical conductors may be found in Appendix L: ▲

a. Approximate diameters of individual wires in stranded conductors.

b. Approximate diameters of conductors not listed in Table 2-6.

c. Approximate conductor weights.

NEMA Authorized Engineering Information 7-14-1982.

2.1 WIRES, PHYSICAL AND ELECTRICAL PROPERTIES

The wires used in conductors shall be copper in accordance with 2.1.1 or aluminum in accordance with 2.1.2.

2.1.1 Copper Wires

Copper wires shall meet the requirements of 2.1.1.1 and either 2.1.1.2 or 2.1.1.3. The 2.1.1.3 option shall apply only to non-compressed and non-compact conductors.

2.1.1.1 Copper wires shall meet the chemical requirements of ASTM B 5.

2.1.1.2 Soft or annealed copper wires intended for a stranded conductor shall meet the elongation, finish, and coating continuity requirements of one of the following:

1. ASTM B 3 for uncoated wires.
2. ASTM B 33 for tin-coated wires.
3. ASTM B 189 for lead or lead-alloy-coated wires.

2.1.1.3 Copper wires removed from a concentric lay stranded conductor, annealed after stranding, shall meet the elongation requirements of ASTM B 8, Sections 7.4, 7.5, and 7.6.

2.1.2 Aluminum Wires

Aluminum wires shall meet the requirements of 2.1.2.1 and either 2.1.2.2 or 2.1.2.3. The 2.1.2.3 option shall apply only to non-compressed and non-compact conductors. The requirements of 2.1.2.2 or 2.1.2.3 shall not apply if the requirements of 2.3.1 or 2.3.2 are met.

2.1.2.1 Aluminum 1350 wires shall meet the chemical requirements of ASTM B 233. Aluminum alloy wires shall contain a minimum of 97 percent aluminum by weight.

2.1.2.2 Aluminum 1350 and aluminum alloy wires intended for a stranded conductor shall meet one of the following:

1. Hard-drawn wire shall meet the tensile, elongation, finish, and brittleness requirements of ASTM B 230.
2. Annealed or intermediate temper wire shall meet the tensile and finish requirements of ASTM B 609.

2.1.2.3 Aluminum 1350 and aluminum alloy wires removed from a concentric lay stranded conductor shall meet the tensile requirements and bending properties of ASTM B 231, Sections 8.5 and 8.6 or 9.2 and 9.4.

2.2 SOLID CONDUCTORS

Solid conductors shall meet the requirements of 2.2.1 or 2.2.2.

2.2.1 A solid copper conductor shall consist of a single round wire meeting the requirements given in 2.1.1.1 and 2.1.1.2.

2.2.2 A solid aluminum 1350 or aluminum alloy conductor shall consist of a single round wire meeting the requirements given in 2.1.2.1, 2.2.2.1, and Table 2-1 and the finish requirements of ASTM B230. Tensile strength of aluminum 1350 and aluminum alloy conductors and elongation of aluminum alloy conductors shall be determined according to ASTM B 230.

2.2.2.1 Size 12 to 8 American Wire Gauge (AWG) solid aluminum conductors shall be an aluminum alloy with an elongation at rupture of not less than 10 percent in 10 inches.

2.3 STRANDED CONDUCTORS

Stranded conductors shall consist of a number of wires individually meeting the appropriate requirements of 2.1. All wires in a stranded conductor shall be of the same material and temper.

Copyright National Electrical Manufacturers Association
Provided by IHS under license with NEMA
No reproduction or networking permitted without license from IHS
C480

Not for Resale

Table 2-1
Solid Aluminum 1350 and Aluminum Alloy Conductors

Conductor Size	Tensile Strength			
	Aluminum 1350		Aluminum Alloy	
AWG	psi	MPa	psi	MPa
12-8	...	...	15000-22000	103-152
7-1	12000-22000	83-152	12000-22000	83-152
1/0 and larger	8500-22000	59-152	8500-22000	59-152

Exception: Coated wires shall be permitted to be used in only the outer layer of an uncoated conductor in order to obtain free stripping of the adjacent polymeric layer. The direct current resistance of the resulting conductor shall not exceed the value specified for an uncoated conductor of the same size.

The requirements for lay, joints, and number of wires shall be in accordance with one of the following:

1. ASTM B 8 for concentric-lay Class B, C, or D stranded copper conductors.
2. ASTM B 172 for rope-lay stranded copper conductors with bunch-stranded members.
3. ASTM B 173 for rope-lay stranded copper conductors with concentric-stranded members.
4. ASTM B 174 for bunch-stranded copper conductors.
5. ASTM B 496 for compact-round stranded copper conductors.
6. ASTM B 231 for concentric-lay Class B, C, or D stranded aluminum 1350 or aluminum alloy conductors.
7. ASTM B 400 for compact-round stranded aluminum 1350 or aluminum alloy conductors.

2.3.1 Concentric-lay-stranded aluminum conductors, including compressed strand, if tested as a unit as an alternative to 2.1.2.2 or 2.1.2.3 and before application of any coverings, shall meet the tensile requirements and bending properties of ASTM B 231, Sections 8.2 to 8.4 and 8.6 or Sections 9.3 and 9.4.

2.3.2 Compact stranded aluminum conductors, if tested as a unit as an alternative to 2.1.2.2 and before application of any coverings, shall meet the tensile requirements of ASTM B 400, Section 8.2 or Section 9.

2.4 CONDUCTOR SIZE UNITS

Conductor size shall be expressed by cross-sectional area in thousand circular mils (kcmil). The AWG equivalents for small sizes shall be found in Table 2-7.

2.5 CONDUCTOR DC RESISTANCE PER UNIT LENGTH

The dc resistance per unit length of each conductor in a production or shipping length of completed cable shall not exceed the value determined from the schedule of maximum dc resistances specified in Table 2-3 when using the appropriate nominal value specified in Table 2-4, Table 2-5 and Table 2-6. The dc resistance shall be determined in accordance with 2.5.1 or 2.5.2. ▲

Where the resistance is measured on a sample taken from a multiple conductor cable, or where the resistance is calculated, the appropriate maximum resistance value specified for a single conductor cable shall apply.

2.5.1 Direct Measurement of dc Resistance Per Unit Length

The dc resistance per unit length shall be determined by dc resistance measurements made in accordance with 6.3.1 to an accuracy of 2 percent or better. If measurements are made at a temperature other than 25 °C (77 °F), the measured value shall be converted to resistance at 25 °C (77 °F) by using either of the following:

1. The appropriate multiplying factor from Table 6-1.
2. A multiplying factor calculated using the applicable formula in the footnote to Table 6-1.

If verification is required for the direct-current resistance measurement made on an entire length of completed cable, a sample at least 1 foot (30.5 cm) long shall be cut from that reel length, and the direct-current resistance of each conductor shall be measured using a Kelvin-type bridge or a potentiometer.

Where an uninsulated conductor is in contact with another metallic or conductive component of the cable, measurements shall be made on a sample taken from the completed cable.

2487

Copyright National Electrical Manufacturers Association
Provided by IHS under license with NEMA
No reproduction or networking permitted without license from IHS
Not for Resale

2.5.2 Calculation of dc Resistance Per Unit Length

The dc resistance per unit length at 25 °C (77 °F) shall be calculated using the following formula:

$$R = K\rho/A$$

Where:

R = Conductor resistance in Ω/1000 ft.

K = Weight increment factor, as given in Table 2-2.

ρ = Volume resistivity in Ω·cmil/ft., determined in accordance with ASTM B 193 using round wires

A = Cross-sectional area of conductor in kcmil, determined in accordance with 6.3.2.1 or 6.3.2.2 for solid, concentric-lay, rope-lay, and bunch-stranded conductors or 6.3.2.2 for compressed or compact-stranded conductors.
When the volume resistivity is expressed in nanoohm meter (nΩ·m) and area is expressed in square millimeters (mm^2) the resistance is expressed in milliohm per meter (mΩ/m).

2.6 CONDUCTOR DIAMETER

The diameter of a conductor having a diameter less than 0.750 inch (19 mm) shall be measured in accordance with 6.3.3.1. The diameter of a conductor having a diameter 0.750 inch (19 mm) or larger shall be measured in accordance with 6.3.3.1 or 6.3.3.2. The diameter shall not differ from the nominal values shown in Table 2-7 by more than plus or minus 5 percent.

2.6.1 The 5 percent diameter tolerance for solid and stranded conductors is provided to enable a designer of connectors to determine the range of conductor sizes which will fit a particular connector; however, a conductor meeting the minimum diameter requirement does not necessarily meet the requirement for maximum dc resistance given in 2.5. ▲

NEMA Authorized Engineering Information 7-14-1982.

Table 2-2
Weight Increment Factors*, K

Solid Conductors	1
Concentric-lay Strand, Class B, C, and D	
up to 2000 kcmil	1.02
>2000—3000 kcmil	1.03
>3000—4000 kcmil	1.04
>4000—5000 kcmil	1.05
Rope-lay Strand Having Concentric Stranded Members, Classes G and H	
49 wires	1.03
133 wires	1.04
259 wires	1.045
427 wires	1.05
Over 427 wires	1.06
Bunched Strand, single bunches	
All sizes	1.02
Rope-lay Strand Having Bunch-stranded Members, Classes I, K and M	
7 bunch stranded members	1.04
19	1.05
37	1.05
61	1.05
7 × 7 bunch stranded members	1.06
19 × 7	1.07
37 × 7	1.07
61 × 7	1.07

* Based on the method specified in either ASTM B 8, ASTM B 496, ASTM B 400, ASTM B 231 ASTM B 172, ASTM B 173 or ASTM B 174 as applicable.

Copyright National Electrical Manufacturers Association
Provided by IHS under license with NEMA
No reproduction or networking permitted without license from IHS
Not for Resale

2.6.2 If one or more layers of any concentric lay stranded Class B, C, or D conductor is compressed to reduce the noncompressed outside diameter, the compression shall not exceed 3 percent.

2.7 STRESS CONTROL LAYER (CONDUCTOR SHIELD)

Conductors to be insulated for a rated circuit voltage above 2000 volts shall be covered with a separate stress controlling material compatible with the conductor and the insulation. The material shall have allowable operating temperatures at least equal to those given for the insulation.

2.7.1 The stress control layer shall be a polymeric covering consisting of a conducting tape, extruded material or extruded material over conducting tape. The layer shall have a minimum thickness of 2.5 mils (0.06 mm).

2.7.1.1 Extrudable material, prior to application to the conductor, when tested according to 6.4.15 shall meet the following requirements:

Elongation after air oven test at 121 °C ± 1 °C for 168 hours minimum percent	100
Brittleness temperature not warmer than °C	−10

2.7.1.1.1 The resistivity of an extruded conducting material when measured according to 6.21 shall not exceed 1000 ohm-meter at room temperature and at the maximum normal operating temperature of the cable.

2.7.1.2 An extruded nonconducting stress controlling material, when measured according to 6.28, shall meet the following requirements at room temperature and at the maximum normal operating temperature of the cable:

Permittivity (SIC), range	10 – 1000
60 hz ac voltage withstand stress, volts per mil, minimum	1500/permittivity

Copyright National Electrical Manufacturers Association
Provided by IHS under license with NEMA
No reproduction or networking permitted without license from IHS

Not for Resale

Table 2-3 ▲
Schedule for Establishing Maximum Direct Current Resistance Per Unit Length of Completed Cable

Non-Portable Cables

Cable Type	Maximum dc Resistance
Single Conductor Cables and Flat Parallel Cables	Table 2-4[a] Value Plus 2% (R max = R × 1.02)
Multiple Conductor Cables and Twisted Assemblies of Single Conductor Cables	Table 2-4[a] Value Plus 2% Plus One of the Following: 2% - One Layer of Conductors (R max = R × 1.02 × 1.02) 3% - More than One Layer of Conductors (R max = R × 1.02 × 1.03) 4% - Pairs or other Precabled Units (R max = R × 1.02 × 1.04)

Portable Cables and Flexible Cords

Cable Type	Maximum dc Resistance
Single Conductor Cables and Flat Parallel Cables	Table 2-5[a] or 2-6[a] Value Plus 2%[b] (R max = R × 1.02)
Multiple Conductor Cables and Twisted Assemblies of Single Conductor Cables	Table 2-5[a] or 2-6[a] Value Plus 2%[b] Plus 5% (R max = R × 1.02 × 1.05)

[a] For conductor strandings or sizes not listed in Tables 2-4 through 2-6 the nominal direct current resistance per unit length of a completed single conductor cable shall be calculated from the factors given in Table 2-8 using the following formula:

$R = 10^{-3} f/A$

Where: R = Conductor resistance in Ω/1000 ft
f = Factor from Table 2-8
A = Cross-sectional area of conductor in kcmil

See 2.5.2 for cross-sectional area determination

[b] For 20 AWG and 18 AWG Class K conductors specified in Table 2-6 this value shall be 3 percent.

▲ Editorially revised.

Copyright National Electrical Manufacturers Association
Provided by IHS under license with NEMA
No reproduction or networking permitted without license from IHS
Not for Resale

Nominal Direct Current Resistance in Ohms Per 1000 Feet** at 25 °C (77 °F) of Solid and Concentric Lay Stranded Conductor

Conductor Size AWG or kcmil	Solid			Concentric Lay Stranded*				
	Aluminum	Copper		Aluminum	Copper			
		Uncoated	Coated	Class B, C, D	Uncoated Class B, C, D	Coated Class B	Coated Class C	Coated Class D
22	27.1	16.5	17.2	27.4	16.7	17.9	...	...
20	16.9	10.3	10.7	17.3	10.5	11.1	...	...
19	13.5	8.20	8.52	13.7	8.33	8.83	...	...
18	10.7	6.51	6.76	10.9	6.67	7.07	...	...
17	8.45	5.15	5.35	8.54	5.21	5.52	...	...
16	6.72	4.10	4.26	6.85	4.18	4.43	...	...
15	5.32	3.24	3.37	5.41	3.30	3.43	...	...
14	4.22	2.57	2.67	4.31	2.63	2.73	2.79	2.83
13	3.34	2.04	2.12	3.41	2.08	2.16	2.21	2.22
12	2.66	1.62	1.68	2.72	1.66	1.72	1.75	1.75
11	2.11	1.29	1.34	2.15	1.31	1.36	1.36	1.39
10	1.67	1.02	1.06	1.70	1.04	1.08	1.08	1.11
9	1.32	0.808	0.831	1.35	0.825	0.856	0.856	0.874
8	1.05	0.640	0.659	1.07	0.652	0.678	0.678	0.680
7	0.833	0.508	0.522	0.851	0.519	0.538	0.538	0.538
6	0.661	0.403	0.414	0.675	0.411	0.427	0.427	0.427
5	0.524	0.319	0.329	0.534	0.325	0.338	0.339	0.339
4	0.415	0.253	0.261	0.424	0.258	0.269	0.269	0.269
3	0.329	0.201	0.207	0.336	0.205	0.213	0.213	0.213
2	0.261	0.159	0.164	0.266	0.162	0.169	0.169	0.169
1	0.207	0.126	0.130	0.211	0.129	0.134	0.134	0.134
1/0	0.164	0.100	0.102	0.168	0.102	0.106	0.106	0.106
2/0	0.130	0.0794	0.0813	0.133	0.0810	0.0842	0.0842	0.0842
3/0	0.103	0.0630	0.0645	0.105	0.0642	0.0667	0.0669	0.0669
4/0	0.0819	0.0500	0.0511	0.0836	0.0510	0.0524	0.0530	0.0530
250	0.0694	...	...	0.0707	0.0431	0.0448	0.0448	0.0448
300	0.0578	...	...	0.0590	0.0360	0.0374	0.0374	0.0374
350	0.0495	...	...	0.0505	0.0308	0.0320	0.0320	0.0320
400	0.0433	...	...	0.0442	0.0269	0.0277	0.0280	0.0280
450	0.0385	...	...	0.0393	0.0240	0.0246	0.0249	0.0249
500	0.0347	...	...	0.0354	0.0216	0.0222	0.0224	0.0224
550	...	...	...	0.0321	0.0196	0.0204	0.0204	0.0204
600	...	...	...	0.0295	0.0180	0.0187	0.0187	0.0187
650	...	...	...	0.0272	0.0166	0.0171	0.0172	0.0173
700	...	...	...	0.0253	0.0154	0.0159	0.0160	0.0160
750	...	...	...	0.0236	0.0144	0.0148	0.0149	0.0150
800	...	...	...	0.0221	0.0135	0.0139	0.0140	0.0140
900	...	...	...	0.0196	0.0120	0.0123	0.0126	0.0126
1000	...	...	...	0.0177	0.0108	0.0111	0.0111	0.0112
1100	...	...	...	0.0161	0.00981	0.0101	0.0102	0.0102
1200	...	...	...	0.0147	0.00899	0.00925	0.00934	0.00934
1250	...	...	...	0.0141	0.00863	0.00888	0.00897	0.00897
1300	...	...	...	0.0136	0.00830	0.00854	0.00861	0.00862
1400	...	...	...	0.0126	0.00771	0.00793	0.00793	0.00801
1500	...	...	...	0.0118	0.00719	0.00740	0.00740	0.00747
1600	...	...	...	0.0111	0.00674	0.00694	0.00700	0.00700
1700	...	...	...	0.0104	0.00634	0.00653	0.00659	0.00659
1750	...	...	...	0.0101	0.00616	0.00634	0.00640	0.00640
1800	...	...	...	0.00982	0.00599	0.00616	0.00616	0.00622
1900	...	...	...	0.00931	0.00568	0.00584	0.00584	0.00589
2000	...	...	...	0.00885	0.00539	0.00555	0.00555	0.00560
2500	...	...	...	0.00715	0.00436	0.00448	...	...
3000	...	...	...	0.00596	0.00363	0.00374	...	...
3500	...	...	...	0.00515	0.00314	0.00323	...	...
4000	...	...	...	0.00451	0.00275	0.00283	...	...
4500	...	...	...	0.00405	0.00247	0.00254	...	...
5000	...	...	...	0.00364	0.00222	0.00229	...	...

* Concentric lay stranded includes compressed and compact conductors.

** Resistance values in milliohms per meter shall be obtained by multiplying the above values by 3.28.

Copyright National Electrical Manufacturers Association
Provided by IHS under license with NEMA
No reproduction or networking permitted without license from IHS

Not for Resale

Table 2-5

Nominal Direct Current Resistance in Ohms Per 1000 Feet*
at 25 °C (77 °F) For Flexible Aluminum Conductors

Conductor Size	Class G	Class H	Class I
AWG or kcmil			
8	...	...	1.07
7	0.858	...	0.850
6	0.681	...	0.687
5	0.540	...	0.545
4	0.428	...	0.432
3	0.340	...	0.343
2	0.269	0.272	0.272
1	0.216	...	0.216
1/0	0.171	0.172	0.172
2/0	0.136	0.136	0.137
3/0	0.107	0.108	0.109
4/0	0.0852	0.0857	0.0861
250	0.0725	0.0728	0.0735
300	0.0604	0.0607	0.0613
350	0.0518	0.0520	0.0525
400	0.0453	0.0455	0.0460
450	0.0403	0.0405	0.0409
500	0.0363	0.0364	0.0368
550	0.0331	0.0334	0.0334
600	0.0304	0.0306	0.0306
650	0.0280	0.0283	0.0286
700	0.0260	0.0263	0.0265
750	0.0243	0.0245	0.0247
800	0.0228	0.0230	0.0232
900	0.0202	0.0204	0.0206
1000	0.0182	0.0184	0.0186
1100	0.0166	0.0167	0.0169
1200	0.0152	0.0153	0.0155
1250	0.0146	0.0147	0.0148
1300	0.0140	0.0141	0.0143
1400	0.0130	0.0131	0.0133
1500	0.0121	0.0123	0.0124
1600	0.0115	0.0115	0.0116
1700	0.0108	0.0108	0.0109
1750	0.0105	0.0105	0.0106
1800	0.0102	0.0102	0.0103
1900	0.00968	0.00968	0.00977
2000	0.00919	0.00919	0.00928

*Resistance values in milliohms per meter shall be obtained by multiplying the above values by 3.28.

Copyright National Electrical Manufacturers Association
Provided by IHS under license with NEMA
No reproduction or networking permitted without license from IHS

Not for Resale

Table 2-6

Nominal Direct Current Resistance in Ohms Per 1000 Feet* at 25 °C (77 °F) For Flexible Annealed Copper Conductors

Conductor Size	Uncoated					Coated				
	Class G	Class H	Class I	Class K	Class M	Class G	Class H	Class I	Class K	Class M
AWG or kcmil										
20	...	...	...	10.6	10.6	...	...	...	11.4	11.4
18	...	...	...	6.66	6.66	...	...	...	7.15	7.15
16	...	...	...	4.18	4.18	...	...	...	4.49	4.49
14	2.65	...	...	2.62	2.62	2.81	...	...	2.82	2.82
12	1.67	...	...	1.65	1.68	1.77	...	...	1.77	1.81
10	1.05	...	1.04	1.04	1.06	1.11	...	1.08	1.12	1.14
9	0.832	...	0.824	0.840	0.840	0.884	...	0.857	0.902	0.902
8	0.660	0.666	0.653	0.666	0.666	0.701	0.708	0.679	0.715	0.715
7	0.523	0.528	0.518	0.528	0.533	0.544	0.561	0.539	0.567	0.573
6	0.415	0.419	0.419	0.419	0.423	0.432	0.445	0.436	0.450	0.454
5	0.329	0.332	0.332	0.332	0.336	0.342	0.353	0.346	0.357	0.360
4	0.261	0.263	0.263	0.263	0.266	0.271	0.280	0.274	0.283	0.286
3	0.207	0.209	0.209	0.211	0.213	0.215	0.222	0.217	0.227	0.227
2	0.164	0.166	0.166	0.167	0.169	0.171	0.172	0.172	0.180	0.181
1	0.131	0.132	0.131	0.133	0.134	0.137	0.140	0.137	0.142	0.144
1/0	0.104	0.105	0.105	0.105	0.106	0.108	0.109	0.109	0.113	0.114
2/0	0.0826	0.0830	0.0834	0.0842	0.0850	0.0859	0.0863	0.0868	0.0904	0.0913
3/0	0.0655	0.0659	0.0662	0.0668	0.0674	0.0682	0.0685	0.0688	0.0717	0.0724
4/0	0.0520	0.0522	0.0525	0.0530	0.0535	0.0541	0.0543	0.0546	0.0569	0.0574
250	0.0442	0.0444	0.0448	0.0448	0.0453	0.0460	0.0462	0.0466	0.0481	0.0486
300	0.0368	0.0370	0.0374	0.0374	0.0377	0.0383	0.0385	0.0389	0.0401	0.0405
350	0.0316	0.0317	0.0320	0.0323	0.0323	0.0328	0.0330	0.0333	0.0347	0.0347
400	0.0276	0.0278	0.0280	0.0283	0.0283	0.0287	0.0289	0.0291	0.0304	0.0304
450	0.0246	0.0247	0.0249	0.0251	0.0251	0.0255	0.0257	0.0259	0.0270	0.0262
500	0.0221	0.0222	0.0224	0.0226	0.0226	0.0230	0.0231	0.0233	0.0243	0.0243
550	0.0202	0.0204	0.0204	0.0206	0.0206	0.0210	0.0212	0.0212	0.0221	0.0221
600	0.0185	0.0187	0.0187	0.0189	0.0189	0.0192	0.0194	0.0194	0.0203	0.0202
650	0.0171	0.0172	0.0174	0.0174	0.0174	0.0178	0.0179	0.0181	0.0187	0.0187
700	0.0159	0.0168	0.0162	0.0162	0.0162	0.0165	0.0167	0.0168	0.0174	0.0174
750	0.0148	0.0149	0.0151	0.0151	0.0151	0.0154	0.0155	0.0157	0.0162	0.0162
800	0.0139	0.0140	0.0141	0.0141	0.0141	0.0144	0.0146	0.0147	0.0152	0.0152
900	0.0123	0.0125	0.0126	0.0126	0.0126	0.0128	0.0130	0.0131	0.0135	0.0135
1000	0.0111	0.0112	0.0113	0.0113	0.0113	0.0115	0.0117	0.0118	0.0122	0.0121
1100	0.0101	0.0102	0.0103	...	...	0.0105	0.0106	0.0107	...	...
1200	0.00925	0.00934	0.00943	...	...	0.00962	0.00971	0.00981	...	...
1250	0.00888	0.00897	0.00905	...	...	0.00924	0.00933	0.00941	...	...
1300	0.00854	0.00862	0.00870	...	...	0.00888	0.00897	0.00905	...	...
1400	0.00793	0.00801	0.00808	...	...	0.00825	0.00833	0.00841	...	...
1500	0.00740	0.00747	0.00754	...	...	0.00770	0.00777	0.00785	...	...
1600	0.00701	0.00701	0.00707	...	...	0.00729	0.00729	0.00735	...	...
1700	0.00659	0.00659	0.00666	...	...	0.00686	0.00686	0.00692	...	...
1750	0.00641	0.00641	0.00647	...	...	0.00666	0.00666	0.00672	...	...
1800	0.00623	0.00623	0.00629	...	...	0.00648	0.00648	0.00654	...	...
1900	0.00590	0.00590	0.00596	...	...	0.00614	0.00614	0.00619	...	...
2000	0.00561	0.00561	0.00566	...	...	0.00583	0.00583	0.00588	...	...

* Resistance values in milliohms per meter shall be obtained by multiplying the above values by 3.28.

Copyright National Electrical Manufacturers Association
Provided by IHS under license with NEMA
No reproduction or networking permitted without license from IHS

Not for Resale

Table 2-7

Nominal Diameters for Copper and Aluminum Conductors

Conductor Size		Nominal Diameters*					
			Concentric Lay Stranded				
		Solid	Compact	Compressed	Class B	Class C	Class D
AWG	kcmil	Inch	Inch	Inch	Inch	Inch	Inch
22	0.812	0.0253	...	...	...	...	...
20	1.02	0.0320	...	...	...	...	...
19	1.29	0.0359	...	...	...	...	...
18	1.62	0.0403	...	...	...	...	...
17	2.05	0.0453	...	...	...	...	...
16	2.58	0.0508	...	...	...	...	...
15	3.26	0.0571	...	0.0629	0.0648	...	...
14	4.11	0.0641	...	0.0704	0.0727	0.0735	0.0735
13	5.18	0.0720	...	0.0792	0.0816	0.0825	0.0826
12	6.53	0.0808	...	0.0888	0.0915	0.0925	0.0931
11	8.23	0.0907	...	0.0998	0.103	0.104	0.104
10	10.38	0.1019	...	0.112	0.116	0.117	0.117
9	13.09	0.1144	...	0.126	0.130	0.131	0.132
8	16.51	0.1285	0.134	0.141	0.146	0.148	0.148
7	20.82	0.1443	...	0.158	0.164	0.166	0.166
6	26.24	0.1620	0.169	0.178	0.184	0.186	0.186
5	33.09	0.1819	...	0.200	0.206	0.208	0.209
4	41.74	0.2043	0.213	0.225	0.232	0.234	0.235
3	52.62	0.2294	0.238	0.252	0.260	0.263	0.264
2	66.36	0.2576	0.268	0.283	0.292	0.296	0.297
1	83.69	0.2893	0.299	0.322	0.332	0.333	0.333
1/0	105.6	0.3249	0.336	0.361	0.372	0.374	0.374
2/0	133.1	0.3648	0.376	0.406	0.418	0.420	0.420
3/0	167.8	0.4096	0.423	0.456	0.470	0.471	0.472
4/0	211.6	0.4600	0.475	0.512	0.528	0.529	0.530
	250	0.5000	0.520	0.558	0.575	0.576	0.576
	300	0.5477	0.570	0.611	0.630	0.631	0.631
	350	0.5916	0.616	0.661	0.681	0.681	0.682
	400	0.6325	0.659	0.706	0.728	0.729	0.729
	450	0.6708	0.700	0.749	0.772	0.773	0.773
	500	0.7071	0.736	0.789	0.813	0.814	0.815
	550	...	0.775	0.829	0.855	0.855	0.855
	600	...	0.813	0.866	0.893	0.893	0.893
	650	...	0.845	0.901	0.929	0.930	0.930
	700	...	0.877	0.935	0.964	0.965	0.965
	750	...	0.908	0.968	0.998	0.999	0.998
	800	...	0.938	1.000	1.030	1.032	1.032
	900	...	0.999	1.061	1.094	1.093	1.095
	1000	...	1.060	1.117	1.152	1.153	1.153
	1100	...	...	1.173	1.209	1.210	1.211
	1200	...	...	1.225	1.263	1.264	1.264
	1250	...	...	1.251	1.289	1.290	1.290
	1300	...	...	1.275	1.314	1.316	1.316
	1400	...	...	1.323	1.365	1.365	1.365
	1500	...	...	1.370	1.412	1.413	1.413
	1600	...	...	1.415	1.459	1.460	1.460
	1700	...	...	1.459	1.504	1.504	1.504
	1750	...	...	1.480	1.526	1.527	1.527
	1800	...	...	1.502	1.548	1.548	1.549
	1900	...	...	1.542	1.590	1.590	1.591
	2000	...	...	1.583	1.632	1.632	1.632

* Diameters in millimeters shall be obtained by multiplying the above values in inches by 25.4.

Copyright National Electrical Manufacturers Association
Provided by IHS under license with NEMA
No reproduction or networking permitted without license from IHS
Not for Resale

Table 2-8*

Factors** for Determining Nominal Resistance of Stranded Conductors Per 1000 Feet

Conductivity, Percent	All Sizes, Uncoated		Diameter of Individual Coated Copper Wires in Inches for Stranded Conductors				
	Aluminum	Copper	0.460 to 0.290, Inclusive	Under 0.290 to 0.103, Inclusive	Under 0.103 to 0.0201, Inclusive	Under 0.0201 to 0.0111, Inclusive	Under 0.0111 to 0.0010, Inclusive
	61	100	97.66	97.16	96.16	94.16	93.15
	25 °C	25 °C	25 °C	25 °C	25 °C	25 °C	25 °C
Rope Stranded							
49 strands	17865	10892	11153	11210	11327	11568	...
133 strands	18038	10998	11261	11319	11437	11681	...
259 strands	18125	11051	11315	11374	11492	11737	...
427 strands	18212	11104	11370	11428	11547	11793	...
Over 427 strands	18385	11209	11478	11537	11657	11905	...
Bunch Stranded							
All sizes	17691	10786	...	...	11217	11456	11579
Rope-stranded Bunches							
7 ropes of bunched strand	18038	10998	...	...	11437	11681	11806
19, 37, or 61 ropes of bunched strand	18212	11104	...	...	11547	11793	11920
7 × 7 ropes of bunched strand	18385	11209	...	...	11657	11905	12033
19, 37, or 61 × 7 ropes of bunched strand	18559	11315	...	...	11767	12018	12147
Concentric Stranded							
Up to 2000 kcmil	17692	10786	11045	11102	11217	11456	11580
> 2000 to 3000 kcmil	17865	10892	11153	11211	11327	11568	11694
> 3000 to 4000 kcmil	18039	10998	11261	11319	11437	11680	11807
> 4000 to 5000 kcmil	18212	11104	11369	11428	11547	11792	11921

* The factors given in Table 2-8 shall be based on the following:

A. Resistivity
1. A volume resistivity of 10.575 Ω·cmil/ft (100 % conductivity) at 25 °C for uncoated (bare) copper.
2. A 25 °C volume resistivity converted from the 20 °C values specified in ASTM B 33 or ASTM B 189 for coated copper.
3. A volume resistivity of 17.345 Ω·cmil/ft (61.0% conductivity) at 25 °C for aluminum.

B. Increase in Resistance Due to Stranding
1. The value of K (weight increment factor) given in Table 2-2.

** See Table 2-3 for Use of Factors.

Copyright National Electrical Manufacturers Association
Provided by IHS under license with NEMA
No reproduction or networking permitted without license from IHS

Not for Resale

Table 2-8
Copper Conductors, Class M
Each Individual Strand 34 AWG, 0.0063 Inch (0.160 mm)

Conductor Size, AWG or MCM	Suggested Construction*	Nominal Number of Strands	Approximate Outside Diameter†		Approximate Weight†	
			inches	mm	Pounds per 1000 Feet	kg/km
20	1×26	26	0.038	0.97	3.2	4.74
18	1×41	41	0.048	1.22	5.0	7.48
16	1×65	65	0.060	1.52	8.0	11.9
14	1×104	104	0.078	1.98	12.8	19.0
12	7×24	168	0.101	2.57	21.0	31.2
10	7×37	259	0.126	3.20	32.5	48.2
9	7×48	336	0.146	3.71	42	62.5
8	7×60	420	0.162	4.11	53	78.1
7	19×28	532	0.196	4.98	67	100.0
6	19×35	665	0.215	5.46	84	125
5	19×44	836	0.240	6.10	105	157
4	19×56	1064	0.269	6.83	134	200
3	7×7×27	1323	0.305	7.75	169	251
2	7×7×34	1666	0.337	8.56	212	316
1	7×7×43	2107	0.376	9.55	268	399
1/0	7×7×54	2646	0.423	10.7	337	501
2/0	19×7×25	3325	0.508	12.9	427	636
3/0	19×7×32	4256	0.576	14.6	547	814
4/0	19×7×40	5320	0.645	16.4	684	1020
250	19×7×48	6384	0.713	18.1	821	1220
300	19×7×57	7581	0.768	19.5	975	1450
350	37×7×34	8806	0.825	21.0	1130	1685
400	37×7×39	10101	0.901	22.9	1300	1930
450	37×7×44	11396	0.940	23.9	1465	2180
500	37×7×49	12691	0.997	25.3	1630	2430
550	61×7×32	13664	1.035	26.3	1755	2615
600	61×7×35	14945	1.084	27.5	1920	2860
650	61×7×38	16226	1.133	28.8	2085	3105
700	61×7×41	17507	1.183	30.0	2250	3350
750	61×7×44	18788	1.207	30.7	2415	3595
800	61×7×47	20069	1.256	31.9	2580	3840
900	61×7×53	22631	1.331	33.8	2910	4330
1000	61×7×59	25193	1.404	35.7	3240	4820

* These constructions are given as information only. Manufacturing processes or applications may require other constructions.
† These columns are approved by NEMA as Authorized Engineering Information.

Table 2-9
Compact Round Stranded Conductors, Copper or Aluminum

Conductor Size, AWG or MCM	Number of Strands	Nominal Overall Diameter	
		Inches	mm
8	7	0.134	3.40
6	7	0.169	4.29
4	7	0.213	5.41
2	7	0.268	6.81
1	19	0.299	7.59
1/0	19	0.336	8.53
2/0	19	0.376	9.55
3/0	19	0.423	10.74
4/0	19	0.475	12.07
250	37	0.520	13.21
300	37	0.570	14.48
350	37	0.616	15.65
400	37	0.659	16.74
450	37	0.700	17.78
500	37	0.736	18.69
550	61	0.775	19.69
600	61	0.813	20.65
650	61	0.845	21.46
700	61	0.877	22.28
750	61	0.908	23.06
800	61	0.938	23.83
900	61	0.999	25.37
1000	61	1.060	26.92

Copyright National Electrical Manufacturers Association
Provided by IHS under license with NEMA
No reproduction or networking permitted without license from IHS
Not for Resale

Table 2-10
Nominal Direct-current Resistance of Aluminum and Annealed Uncoated Copper Conductors (Solid)

Conductor Size, AWG or MCM	20 °C				25 °C			
	Aluminum		Copper		Aluminum		Copper	
	ohms per 1000 Feet	ohms per km	ohms per 1000 Feet	ohms per km	ohms per 1000 Feet	ohms per km	ohms per 1000 Feet	ohms per km
22	...	...	16.2	53.2	...	...	16.5	54.2
20	16.6	54.5	10.1	33.2	16.9	55.6	10.3	33.9
19	13.2	43.3	8.05	26.4	13.5	44.2	8.21	26.9
18	10.5	34.3	6.39	21.0	10.7	35.0	6.51	21.4
17	8.29	27.2	5.05	16.6	8.45	27.7	5.15	16.9
16	6.59	21.6	4.02	13.2	6.72	22.1	4.10	13.4
15	5.21	17.1	3.18	10.4	5.32	17.5	3.24	10.6
14	4.14	13.6	2.52	8.28	4.22	13.8	2.57	8.44
13	3.28	10.8	2.00	6.56	3.35	11.0	2.04	6.69
12	2.60	8.54	1.59	5.21	2.66	8.72	1.62	5.31
11	2.07	6.78	1.26	4.14	2.11	6.92	1.29	4.22
10	1.64	5.37	0.999	3.28	1.67	5.48	1.02	3.34
9	1.30	4.26	0.793	2.60	1.33	4.35	0.808	2.65
8	1.03	3.38	0.628	2.06	1.05	3.45	0.640	2.10
7	0.817	2.68	0.498	1.63	0.833	2.73	0.508	1.67
6	0.648	2.13	0.395	1.30	0.661	2.17	0.403	1.32
5	0.514	1.69	0.313	1.03	0.524	1.72	0.320	1.05
4	0.407	1.34	0.249	0.815	0.416	1.36	0.253	0.831
3	0.323	1.06	0.197	0.647	0.330	1.08	0.201	0.659
2	0.256	0.841	0.156	0.513	0.261	0.858	0.159	0.523
1	0.203	0.667	0.124	0.407	0.207	0.680	0.126	0.415
1/0	0.161	0.528	0.0983	0.322	0.164	0.539	0.100	0.329
2/0	0.128	0.419	0.0779	0.256	0.130	0.428	0.0795	0.261
3/0	0.101	0.333	0.0618	0.203	0.103	0.339	0.0630	0.207
4/0	0.0804	0.264	0.0490	0.161	0.0820	0.269	0.0500	0.164
250	0.0680	0.223	...	...	0.0694	0.228	...	...
300	0.0567	0.186	...	...	0.0578	0.190	...	...
350	0.0486	0.159	...	...	0.0496	0.163	...	...
400	0.0425	0.139	...	...	0.0434	0.142	...	...
450	0.0378	0.124	...	...	0.0386	0.127	...	...
500	0.0340	0.112	...	...	0.0347	0.114	...	...

Table 2-11
Nominal Direct-current Resistance of Annealed Coated Copper Conductors, Solid

Conductor Size, AWG	20 °C		25 °C	
	Copper		Copper	
	ohms per 1000 Feet	ohms per km	ohms per 1000 Feet	ohms per km
22	16.9	55.3	17.2	56.4
20	10.5	34.6	10.7	35.2
19	8.37	27.5	8.53	28.0
18	6.64	21.8	6.77	22.2
17	5.26	17.2	5.36	17.6
16	4.18	13.7	4.26	14.0
15	3.31	10.9	3.37	11.1
14	2.63	8.61	2.67	8.78
13	2.08	6.83	2.12	6.96
12	1.65	5.42	1.68	5.53
11	1.31	4.30	1.34	4.39
10	1.04	3.41	1.06	3.48
9	0.816	2.68	0.832	2.73
8	0.647	2.12	0.659	2.16
7	0.513	1.68	0.523	1.72
6	0.407	1.33	0.415	1.36
5	0.323	1.06	0.329	1.08
4	0.256	0.839	0.261	0.856
3	0.203	0.666	0.207	0.679
2	0.161	0.528	0.164	0.538
1	0.128	0.418	0.130	0.427
1/0	0.101	0.330	0.103	0.337
2/0	0.0798	0.262	0.0814	0.267
3/0	0.0633	0.208	0.0645	0.212
4/0	0.0502	0.165	0.0512	0.168

Copyright National Electrical Manufacturers Association
Provided by IHS under license with NEMA
No reproduction or networking permitted without license from IHS

Not for Resale

Table 2-12
Nominal Direct-current Resistance of Aluminum and Annealed Uncoated Copper Conductors
Concentric Stranded Classes B, C and D and Compact Stranded

Conductor Size, AWG or MCM	20°C				25°C			
	Aluminum		Copper		Aluminum		Copper	
	ohms per 1000 Feet	ohms per km	ohms per 1000 Feet	ohms per km	ohms per 1000 Feet	ohms per km	ohms per 1000 Feet	ohms per km
22	...	...	...	...	...	...	...	...
20	...	...	10.3	33.9	...	...	10.5	34.6
19	...	...	...	...	...	...	...	...
18	...	...	6.51	21.4	...	...	6.64	21.8
17	...	...	...	...	...	...	...	...
16	...	...	4.10	13.4	...	...	4.18	13.7
15	...	...	...	...	...	...	...	...
14	...	...	2.57	8.45	...	...	2.63	8.61
13	...	...	2.04	6.69	...	...	2.08	6.83
12	2.66	8.71	1.62	5.32	2.71	8.89	1.65	5.42
11	2.11	6.92	1.29	4.22	2.15	7.06	1.31	4.30
10	1.67	5.48	1.02	3.34	1.70	5.59	1.04	3.41
9	1.33	4.35	0.808	2.65	1.35	4.44	0.824	2.70
8	1.05	3.45	0.641	2.10	1.07	3.52	0.653	2.14
7	0.833	2.73	0.508	1.67	0.850	2.79	0.518	1.70
6	0.661	2.17	0.403	1.32	0.674	2.21	0.411	1.35
5	0.524	1.72	0.320	1.05	0.535	1.75	0.326	1.07
4	0.416	1.36	0.253	0.832	0.424	1.39	0.258	0.848
3	0.330	1.08	0.201	0.660	0.336	1.10	0.205	0.673
2	0.261	0.857	0.159	0.523	0.267	0.875	0.163	0.533
1	0.207	0.680	0.126	0.415	0.211	0.694	0.129	0.423
1/0	0.164	0.539	0.100	0.329	0.168	0.550	0.102	0.335
2/0	0.130	0.428	0.0795	0.261	0.133	0.436	0.0811	0.266
3/0	0.103	0.339	0.0631	0.207	0.105	0.346	0.0643	0.211
4/0	0.0820	0.269	0.0500	0.164	0.0836	0.274	0.0510	0.167
250	0.0694	0.228	0.0423	0.139	0.0708	0.232	0.0432	0.142
300	0.0578	0.190	0.0353	0.116	0.0590	0.194	0.0360	0.118
350	0.0496	0.163	0.0302	0.0992	0.0506	0.166	0.0308	0.101
400	0.0434	0.142	0.0265	0.0868	0.0442	0.145	0.0270	0.0885
450	0.0385	0.126	0.0235	0.0771	0.0393	0.129	0.0240	0.0786
500	0.0347	0.114	0.0212	0.0694	0.0354	0.116	0.0216	0.0708
550	0.0315	0.103	0.0192	0.0631	0.0322	0.106	0.0196	0.0643
600	0.0289	0.0948	0.0176	0.0578	0.0295	0.0967	0.0180	0.0590
650	0.0267	0.0875	0.0163	0.0534	0.0272	0.0893	0.0166	0.0544
700	0.0248	0.0813	0.0151	0.0496	0.0253	0.0829	0.0154	0.0506
750	0.0231	0.0759	0.0141	0.0463	0.0236	0.0774	0.0144	0.0472
800	0.0217	0.0711	0.0132	0.0434	0.0221	0.0726	0.0135	0.0442
900	0.0193	0.0632	0.0118	0.0386	0.0197	0.0645	0.0120	0.0393
1000	0.0173	0.0569	0.0106	0.0347	0.0177	0.0580	0.0108	0.0354
1100	0.0158	0.0517	0.00962	0.0316	0.0161	0.0528	0.00987	0.0322
1200	0.0145	0.0474	0.00882	0.0289	0.0147	0.0484	0.00899	0.0295
1250	0.0139	0.0455	0.00846	0.0278	0.0142	0.0464	0.00863	0.0283
1300	0.0133	0.0438	0.00814	0.0267	0.0136	0.0447	0.00830	0.0272
1400	0.0124	0.0406	0.00756	0.0248	0.0126	0.0415	0.00771	0.0253
1500	0.0116	0.0379	0.00705	0.0231	0.0118	0.0387	0.00719	0.0236
1600	0.0108	0.0356	0.00661	0.0217	0.0111	0.0363	0.00674	0.0221
1700	0.0102	0.0335	0.00622	0.0204	0.0104	0.0341	0.00635	0.0208
1750	0.00991	0.0325	0.00605	0.0198	0.0101	0.0332	0.00616	0.0202
1800	0.00963	0.0316	0.00588	0.0193	0.00983	0.0323	0.00599	0.0197
1900	0.00913	0.0300	0.00557	0.0183	0.00931	0.0306	0.00568	0.0186
2000	0.00867	0.0285	0.00529	0.0174	0.00885	0.0290	0.00539	0.0177
2500	0.00701	0.0230	0.00427	0.0140	0.00715	0.0234	0.00436	0.0143
3000	0.00584	0.0192	0.00356	0.0117	0.00596	0.0195	0.00363	0.0119
3500	0.00505	0.0166	0.00308	0.0101	0.00515	0.0169	0.00314	0.0103
4000	0.00442	0.0145	0.00270	0.00885	0.00451	0.0148	0.00275	0.00902
4500	0.00397	0.0190	0.00242	0.00794	0.00405	0.0133	0.00247	0.00810
5000	0.00357	0.0117	0.00218	0.00715	0.00364	0.0120	0.00222	0.00729

Copyright National Electrical Manufacturers Association
Provided by IHS under license with NEMA
No reproduction or networking permitted without license from IHS
Not for Resale

Table 2-13
Nominal Direct-current Resistance of Annealed
Coated Copper Conductors, Concentric Stranded Class B

Conductor Size, AWG or MCM	20 °C		25 °C	
	ohms per 1000 Feet	ohms per km	ohms per 1000 Feet	ohms per km
22	...	...	...	...
20	11.0	36.0	11.2	36.7
19	...	...	...	...
18	6.92	22.7	7.05	23.1
17	...	...	...	...
16	4.35	14.3	4.44	14.6
15	...	...	...	...
14	2.68	8.78	2.73	8.96
13	2.12	6.96	2.16	7.10
12	1.69	5.53	1.72	5.64
11	1.34	4.39	1.36	4.47
10	1.06	3.48	1.08	3.54
9	0.841	2.76	0.857	2.81
8	0.666	2.19	0.679	2.23
7	0.528	1.73	0.539	1.77
6	0.419	1.38	0.427	1.40
5	0.333	1.09	0.339	1.11
4	0.267	0.865	0.269	0.882
3	0.209	0.686	0.213	0.699
2	0.166	0.544	0.169	0.555
1	0.131	0.431	0.134	0.440
1/0	0.104	0.342	0.106	0.349
2/0	0.0827	0.271	0.0843	0.277
3/0	0.0656	0.215	0.0669	0.219
4/0	0.0515	0.169	0.0525	0.172
250	0.0440	0.144	0.0449	0.147
300	0.0367	0.120	0.0374	0.123
350	0.0314	0.103	0.0321	0.105
400	0.0272	0.0893	0.0278	0.0911
450	0.0242	0.0794	0.0247	0.0809
500	0.0218	0.0714	0.0222	0.0729
550	0.0200	0.0656	0.0204	0.0669
600	0.0183	0.0602	0.0187	0.0613
650	0.0168	0.0550	0.0171	0.0560
700	0.0156	0.0510	0.0159	0.0520
750	0.0145	0.0476	0.0148	0.0486
800	0.0136	0.0447	0.0139	0.0455
900	0.0121	0.0397	0.0123	0.0405
1000	0.0109	0.0357	0.0111	0.0364
1100	0.00990	0.0325	0.0101	0.0331
1200	0.00907	0.0298	0.00925	0.0304
1250	0.00871	0.0286	0.00888	0.0291
1300	0.00838	0.0275	0.00854	0.0280
1400	0.00778	0.0255	0.00793	0.0260
1500	0.00726	0.0238	0.00740	0.0243
1600	0.00681	0.0223	0.00694	0.0228
1700	0.00641	0.0210	0.00653	0.0214
1750	0.00622	0.0204	0.00634	0.0208
1800	0.00605	0.0198	0.00617	0.0202
1900	0.00573	0.0188	0.00584	0.0192
2000	0.00544	0.0179	0.00555	0.0182
2500	0.00440	0.0144	0.00448	0.0147
3000	0.00367	0.0120	0.00374	0.0123
3500	0.00317	0.0104	0.00323	0.0106
4000	0.00278	0.00911	0.00283	0.00928
4500	0.00249	0.00817	0.00254	0.00833
5000	0.00224	0.00735	0.00229	0.00750

Copyright National Electrical Manufacturers Association
Provided by IHS under license with NEMA
No reproduction or networking permitted without license from IHS

Not for Resale

Table 2-14
Nominal Direct-current Resistance of Annealed Coated Copper Conductors, Concentric Stranded, Class C and D

Conductor Size, AWG or MCM	Class C				Class D			
	20 °C		25 °C		20 °C		25 °C	
	ohms per 1000 Feet	ohms per km	ohms per 1000 Feet	ohms per km	ohms per 1000 Feet	ohms per km	ohms per 1000 Feet	ohms per km
14	2.73	8.97	2.79	9.14	2.76	9.07	2.82	9.24
13	2.17	7.12	2.21	7.26	2.17	7.12	2.21	7.26
12	1.72	5.64	1.75	5.76	1.72	5.64	1.75	5.76
11	1.34	4.39	1.36	4.47	1.37	4.48	1.39	4.57
10	1.06	3.48	1.08	3.55	1.08	3.55	1.10	3.62
9	0.840	2.76	0.857	2.81	0.858	2.82	0.875	2.87
8	0.666	2.19	0.679	2.23	0.666	2.19	0.679	2.23
7	0.528	1.73	0.539	1.77	0.528	1.73	0.539	1.77
6	0.419	1.38	0.427	1.40	0.419	1.38	0.427	1.40
5	0.332	1.09	0.339	1.11	0.332	1.09	0.339	1.11
4	0.264	0.865	0.269	0.882	0.264	0.865	0.269	0.882
3	0.209	0.686	0.213	0.699	0.209	0.686	0.213	0.699
2	0.166	0.544	0.169	0.555	0.166	0.544	0.169	0.555
1	0.131	0.431	0.134	0.440	0.131	0.431	0.134	0.440
1/0	0.104	0.342	0.106	0.348	0.104	0.342	0.106	0.348
2/0	0.0827	0.271	0.0843	0.276	0.0827	0.271	0.0843	0.276
3/0	0.0656	0.215	0.0668	0.219	0.0656	0.215	0.0668	0.219
4/0	0.0520	0.171	0.0530	0.174	0.0520	0.171	0.0530	0.174
250	0.0440	0.144	0.0449	0.147	0.0440	0.144	0.0449	0.147
300	0.0367	0.120	0.0374	0.123	0.0367	0.120	0.0374	0.123
350	0.0314	0.103	0.0320	0.105	0.0314	0.103	0.0320	0.105
400	0.0275	0.0902	0.0280	0.0920	0.0275	0.0902	0.0280	0.0920
450	0.0244	0.0802	0.0249	0.0818	0.0244	0.0802	0.0249	0.0818
500	0.0220	0.0722	0.0224	0.0736	0.0220	0.0722	0.0224	0.0736
550	0.0200	0.0656	0.0204	0.0669	0.0200	0.0656	0.0204	0.0669
600	0.0183	0.0602	0.0187	0.0613	0.0183	0.0602	0.0187	0.0613
650	0.0169	0.0555	0.0173	0.0566	0.0169	0.0555	0.0173	0.0566
700	0.0157	0.0516	0.0160	0.0526	0.0157	0.0516	0.0160	0.0526
750	0.0147	0.0481	0.0150	0.0491	0.0147	0.0481	0.0150	0.0491
800	0.0138	0.0451	0.0140	0.0460	0.0138	0.0451	0.0140	0.0460
900	0.0122	0.0401	0.0125	0.0409	0.0122	0.0401	0.0125	0.0409
1000	0.0109	0.0357	0.0111	0.0364	0.0110	0.0361	0.0112	0.0368
1100	0.0100	0.0328	0.0102	0.0335	0.0100	0.0328	0.0102	0.0335
1200	0.00917	0.0301	0.00935	0.0307	0.00917	0.0301	0.00935	0.0307
1250	0.00880	0.0289	0.00897	0.0294	0.00880	0.0289	0.00897	0.0294
1300	0.00846	0.0278	0.00863	0.0283	0.00846	0.0278	0.00863	0.0283
1400	0.00778	0.0255	0.00793	0.0260	0.00786	0.0258	0.00801	0.0263
1500	0.00726	0.0238	0.00740	0.0243	0.00733	0.0241	0.00748	0.0245
1600	0.00688	0.0226	0.00701	0.0230	0.00688	0.0226	0.00701	0.0230
1700	0.00647	0.0212	0.00660	0.0216	0.00647	0.0212	0.00660	0.0216
1750	0.00629	0.0206	0.00641	0.0210	0.00629	0.0206	0.00641	0.0210
1800	0.00605	0.0198	0.00617	0.0202	0.00611	0.0201	0.00623	0.0204
1900	0.00573	0.0188	0.00584	0.0192	0.00579	0.0190	0.00590	0.0194
2000	0.00544	0.0179	0.00555	0.0182	0.00550	0.0180	0.00561	0.0184

Copyright National Electrical Manufacturers Association
Provided by IHS under license with NEMA
No reproduction or networking permitted without license from IHS
Not for Resale

Copyright National Electrical Manufacturers Association
Provided by IHS under license with NEMA
No reproduction or networking permitted without license from IHS
Not for Resale

WC 3-80
6470247 0004968 2

Table 2-15
Nominal Direct-current Resistance of Class G Stranded Conductors

Conductor Size, AWG or MCM	Annealed Uncoated Copper				Annealed Coated Copper				Aluminum			
	20 °C		25 °C		20 °C		25 °C		20 °C		25 °C	
	ohms per 1000 Feet	ohms per km	ohms per 1000 Feet	ohms per km	ohms per 1000 Feet	ohms per km	ohms per 1000 Feet	ohms per km	ohms per 1000 Feet	ohms per km	ohms per 1000 Feet	ohms per km
14	2.60	8.53	2.65	8.69	2.76	9.06	2.81	9.23	...	...	...	...
12	1.64	5.37	1.67	5.47	1.74	5.70	1.77	5.81	...	...	...	...
10	1.03	3.38	1.05	3.44	1.09	3.59	1.11	3.66	...	...	...	...
9	0.816	2.68	0.832	2.73	0.867	2.84	0.884	2.90	...	...	...	...
8	0.647	2.12	0.660	2.16	0.687	2.25	0.701	2.30	...	...	...	...
7	0.513	1.68	0.523	1.72	0.534	1.75	0.544	1.78	0.841	2.76	0.858	2.82
6	0.407	1.34	0.415	1.36	0.423	1.39	0.432	1.42	0.667	2.19	0.681	2.23
5	0.323	1.06	0.329	1.08	0.336	1.10	0.342	1.12	0.529	1.74	0.540	1.77
4	0.256	0.840	0.261	0.856	0.266	0.873	0.271	0.890	0.420	1.38	0.428	1.40
3	0.203	0.666	0.207	0.679	0.211	0.693	0.215	0.706	0.333	1.09	0.340	1.11
2	0.161	0.528	0.164	0.539	0.167	0.549	0.171	0.560	0.264	0.866	0.269	0.883
1	0.129	0.423	0.131	0.431	0.134	0.440	0.137	0.448	0.211	0.693	0.216	0.707
1/0	0.102	0.335	0.104	0.342	0.106	0.348	0.108	0.355	0.167	0.549	0.171	0.560
2/0	0.0810	0.266	0.0826	0.271	0.0843	0.276	0.0859	0.282	0.133	0.436	0.136	0.445
3/0	0.0643	0.211	0.0655	0.215	0.0668	0.219	0.0682	0.224	0.105	0.346	0.107	0.353
4/0	0.0510	0.167	0.0520	0.171	0.0530	0.174	0.0541	0.177	0.0836	0.274	0.0852	0.280
250	0.0434	0.142	0.0442	0.145	0.0451	0.148	0.0460	0.151	0.0711	0.233	0.0725	0.238
300	0.0361	0.119	0.0368	0.121	0.0376	0.123	0.0383	0.126	0.0592	0.194	0.0604	0.198
350	0.0310	0.102	0.0316	0.104	0.0322	0.106	0.0328	0.108	0.0508	0.167	0.0518	0.170
400	0.0271	0.0889	0.0276	0.0906	0.0282	0.0924	0.0287	0.0943	0.0444	0.146	0.0453	0.149
450	0.0241	0.0790	0.0246	0.0806	0.0250	0.0822	0.0255	0.0838	0.0395	0.130	0.0403	0.132
500	0.0217	0.0711	0.0221	0.0725	0.0225	0.0740	0.0230	0.0754	0.0355	0.117	0.0363	0.119
550	0.0198	0.0650	0.0202	0.0662	0.0206	0.0676	0.0210	0.0689	0.0325	0.106	0.0331	0.109
600	0.0182	0.0595	0.0185	0.0607	0.0189	0.0619	0.0192	0.0631	0.0298	0.0976	0.0304	0.0996
650	0.0168	0.0550	0.0171	0.0560	0.0174	0.0572	0.0178	0.0583	0.0275	0.0901	0.0280	0.0919
700	0.0156	0.0510	0.0159	0.0520	0.0162	0.0531	0.0165	0.0541	0.0255	0.0837	0.0260	0.0854
750	0.0145	0.0476	0.0148	0.0486	0.0151	0.0495	0.0154	0.0505	0.0238	0.0781	0.0243	0.0797
800	0.0136	0.0447	0.0139	0.0455	0.0142	0.0464	0.0144	0.0474	0.0223	0.0732	0.0228	0.0747
900	0.0121	0.0397	0.0123	0.0405	0.0126	0.0413	0.0128	0.0421	0.0198	0.0651	0.0202	0.0664
1000	0.0109	0.0357	0.0111	0.0364	0.0113	0.0372	0.0115	0.0379	0.0179	0.0586	0.0182	0.0598
1100	0.0099	0.0325	0.0101	0.0331	0.0103	0.0338	0.0105	0.0344	0.0162	0.0532	0.0166	0.0543
1200	0.00908	0.0298	0.00925	0.0304	0.00944	0.0310	0.00962	0.0316	0.0149	0.0488	0.0152	0.0498
1250	0.00871	0.0286	0.00888	0.0291	0.00906	0.0297	0.00924	0.0303	0.0143	0.0469	0.0146	0.0478
1300	0.00838	0.0275	0.00854	0.0280	0.00871	0.0286	0.00888	0.0291	0.0137	0.0451	0.0140	0.0460
1400	0.00778	0.0255	0.00793	0.0260	0.00809	0.0265	0.00825	0.0271	0.0128	0.0418	0.0130	0.0427
1500	0.00726	0.0238	0.00740	0.0243	0.00755	0.0248	0.00770	0.0253	0.0119	0.0390	0.0121	0.0398
1600	0.00687	0.0225	0.00701	0.0230	0.00715	0.0234	0.00729	0.0239	0.0113	0.0370	0.0115	0.0377
1700	0.00647	0.0212	0.00659	0.0216	0.00673	0.0221	0.00686	0.0225	0.0106	0.0348	0.0108	0.0355
1750	0.00628	0.0206	0.00641	0.0210	0.00653	0.0214	0.00666	0.0219	0.0103	0.0338	0.0105	0.0345
1800	0.00611	0.0200	0.00623	0.0204	0.00635	0.0208	0.00648	0.0212	0.0100	0.0328	0.0102	0.0335
1900	0.00579	0.0190	0.00590	0.0194	0.00602	0.0197	0.00614	0.0201	0.00949	0.0311	0.00968	0.0317
2000	0.00550	0.0180	0.00561	0.0184	0.00572	0.0188	0.00583	0.0191	0.00901	0.0296	0.00919	0.0302

Copyright National Electrical Manufacturers Association
Provided by IHS under license with NEMA
No reproduction or networking permitted without license from IHS

WC 3-80
6470247 0004669 4

Table 2-16
Nominal Direct-current Resistance of Class H Stranded Conductors

Conductor Size, AWG or MCM	Annealed Uncoated Copper				Annealed Coated Copper				Aluminum			
	20 °C		25 °C		20 °C		25 °C		20 °C		25 °C	
	ohms per 1000 Feet	ohms per km	ohms per 1000 Feet	ohms per km	ohms per 1000 Feet	ohms per km	ohms per 1000 Feet	ohms per km	ohms per 1000 Feet	ohms per km	ohms per 1000 Feet	ohms per km
8	0.653	2.14	0.666	2.19	0.694	2.28	0.708	2.32	...	...	...	...
7	0.518	1.70	0.528	1.73	0.550	1.81	0.561	1.84	...	...	...	...
6	0.411	1.35	0.419	1.38	0.437	1.43	0.445	1.46	...	...	...	...
5	0.326	1.07	0.332	1.09	0.346	1.14	0.353	1.16	...	...	...	...
4	0.258	0.848	0.263	0.864	0.274	0.900	0.280	0.918	...	...	...	...
3	0.205	0.673	0.209	0.686	0.218	0.714	0.222	0.728	...	...	...	...
2(133 Wire)	0.163	0.533	0.166	0.544	0.169	0.555	0.172	0.565	0.266	0.874	0.272	0.892
2 (259 Wire)	0.163	0.536	0.167	0.546	0.173	0.569	0.177	0.580	...	...	...	...
1	0.130	0.425	0.132	0.433	0.138	0.451	0.140	0.460	...	...	...	...
1/0	0.103	0.337	0.105	0.343	0.107	0.350	0.109	0.357	0.168	0.552	0.172	0.563
2/0	0.0814	0.267	0.0830	0.272	0.0847	0.278	0.0863	0.283	0.133	0.438	0.136	0.447
3/0 (259 Wire)	0.0646	0.212	0.0659	0.216	0.0672	0.220	0.0685	0.225	0.106	0.347	0.108	0.354
3/0 (427 Wire)	0.0649	0.213	0.0662	0.217	0.0689	0.226	0.0703	0.231	...	...	...	...
4/0 (259 Wire)	0.0512	0.168	0.0522	0.171	0.0533	0.175	0.0543	0.178	0.0840	0.275	0.0857	0.281
4/0 (427 Wire)	0.0515	0.169	0.0525	0.172	0.0535	0.176	0.0546	0.179	0.0844	0.277	0.0861	0.282
250	0.0436	0.143	0.0444	0.146	0.0453	0.149	0.0462	0.152	0.0714	0.234	0.0728	0.239
300	0.0363	0.119	0.0370	0.121	0.0378	0.124	0.0385	0.126	0.0595	0.195	0.0607	0.199
350	0.0311	0.102	0.0317	0.104	0.0324	0.106	0.0330	0.108	0.0510	0.167	0.0520	0.171
400	0.0272	0.0893	0.0278	0.0911	0.0283	0.0929	0.0289	0.0947	0.0446	0.146	0.0455	0.149
450	0.0242	0.0794	0.0247	0.0810	0.0252	0.0826	0.0257	0.0842	0.0397	0.130	0.0405	0.133
500	0.0218	0.0715	0.0222	0.0729	0.0227	0.0743	0.0231	0.0758	0.0357	0.117	0.0364	0.120
550	0.0200	0.0656	0.0204	0.0669	0.0208	0.0682	0.0212	0.0695	0.0328	0.108	0.0334	0.110
600	0.0183	0.0601	0.0187	0.0613	0.0191	0.0625	0.0194	0.0637	0.0300	0.0985	0.0306	0.101
650	0.0169	0.0555	0.0172	0.0566	0.0176	0.0577	0.0179	0.0588	0.0277	0.0910	0.0283	0.0928
700	0.0157	0.0515	0.0160	0.0525	0.0163	0.0536	0.0167	0.0546	0.0257	0.0845	0.0263	0.0862
750	0.0147	0.0481	0.0149	0.0490	0.0152	0.0500	0.0155	0.0510	0.0240	0.0788	0.0245	0.0804
800	0.0137	0.0451	0.0140	0.0460	0.0143	0.0469	0.0146	0.0478	0.0225	0.0739	0.0230	0.0754
900	0.0122	0.0401	0.0125	0.0409	0.0127	0.0417	0.0130	0.0425	0.0200	0.0657	0.0204	0.0670
1000	0.0110	0.0361	0.0112	0.0368	0.0114	0.0375	0.0117	0.0382	0.0180	0.0591	0.0184	0.0603
1100	0.00999	0.0328	0.0102	0.0334	0.0104	0.0341	0.0106	0.0347	0.0164	0.0538	0.0167	0.0548
1200	0.00916	0.0301	0.00934	0.0306	0.0953	0.0313	0.00971	0.0319	0.0150	0.0493	0.0153	0.0503
1250	0.00879	0.0289	0.00897	0.0294	0.00915	0.0300	0.00933	0.0306	0.0144	0.0473	0.0147	0.0483
1300	0.00846	0.0277	0.00862	0.0283	0.00879	0.0289	0.00897	0.0294	0.0139	0.0455	0.0141	0.0464
1400	0.00785	0.0258	0.00801	0.0263	0.00817	0.0268	0.00833	0.0273	0.0129	0.0422	0.0131	0.0431
1500	0.00733	0.0240	0.00747	0.0245	0.00762	0.0250	0.00777	0.0255	0.0120	0.0394	0.0123	0.0402
1600	0.00687	0.0225	0.00701	0.0230	0.00715	0.0234	0.00729	0.0239	0.0113	0.0370	0.0115	0.0377
1700	0.00647	0.0212	0.00659	0.0216	0.00673	0.0221	0.00686	0.0225	0.0106	0.0348	0.0108	0.0355
1750	0.00628	0.0206	0.00641	0.0210	0.00653	0.0214	0.00666	0.0219	0.0103	0.0338	0.0105	0.0345
1800	0.00611	0.0200	0.00623	0.0204	0.00635	0.0208	0.00648	0.0212	0.0100	0.0328	0.0102	0.0335
1900	0.00579	0.0190	0.00590	0.0194	0.00602	0.0197	0.00614	0.0201	0.00949	0.0311	0.00968	0.0317
2000	0.00550	0.0180	0.00561	0.0184	0.00572	0.0188	0.00583	0.0191	0.00901	0.0296	0.00919	0.0302

Not for Resale

Copyright National Electrical Manufacturers Association
Provided by IHS under license with NEMA
No reproduction or networking permitted without license from IHS

6470247 0004670 0

Table 2-17
Nominal Direct-current Resistance of Class I Stranded Conductors

Conductor Size, AWG or MCM	Annealed Uncoated Copper				Annealed Coated Copper				Aluminum			
	20 °C		25 °C		20 °C		25 °C		20 °C		25 °C	
	ohms per 1000 Feet	ohms per km	ohms per 1000 Feet	ohms per km	ohms per 1000 Feet	ohms per km	ohms per 1000 Feet	ohms per km	ohms per 1000 Feet	ohms per km	ohms per 1000 Feet	ohms per km
10	1.02	3.34	1.04	3.41	1.06	3.48	1.08	3.55	...	...	...	...
9	0.808	2.65	0.824	2.70	0.840	2.76	0.857	2.81	...	...	...	...
8	0.641	2.10	0.653	2.14	0.666	2.19	0.679	2.23	1.05	3.45	1.07	3.52
7	0.508	1.67	0.518	1.70	0.528	1.73	0.539	1.77	0.833	2.73	0.850	2.79
6	0.411	1.35	0.419	1.38	0.427	1.40	0.436	1.43	0.674	2.21	0.687	2.26
5	0.326	1.07	0.332	1.09	0.339	1.11	0.346	1.13	0.534	1.75	0.545	1.79
4	0.258	0.848	0.263	0.864	0.269	0.882	0.274	0.899	0.424	1.39	0.432	1.42
3	0.205	0.673	0.209	0.686	0.213	0.699	0.217	0.713	0.336	1.10	0.343	1.12
2	0.163	0.533	0.166	0.544	0.169	0.555	0.172	0.565	0.266	0.874	0.272	0.892
1	0.129	0.423	0.131	0.431	0.134	0.440	0.137	0.448	0.211	0.693	0.216	0.707
1/0	0.103	0.338	0.105	0.345	0.107	0.352	0.109	0.359	0.169	0.555	0.172	0.566
2/0	0.0818	0.268	0.0834	0.274	0.0851	0.279	0.0868	0.285	0.134	0.440	0.137	0.449
3/0	0.0649	0.213	0.0662	0.217	0.0675	0.221	0.0688	0.226	0.106	0.349	0.109	0.356
4/0	0.0515	0.169	0.0525	0.172	0.0535	0.176	0.0546	0.179	0.0844	0.277	0.0861	0.282
250	0.0440	0.144	0.0448	0.147	0.0457	0.150	0.0466	0.153	0.0721	0.237	0.0735	0.241
300	0.0366	0.120	0.0374	0.123	0.0381	0.125	0.0389	0.127	0.0601	0.197	0.0613	0.201
350	0.0314	0.103	0.0320	0.105	0.0327	0.107	0.0333	0.109	0.0515	0.169	0.0525	0.172
400	0.0275	0.0902	0.0280	0.0919	0.0286	0.0938	0.0291	0.0956	0.0451	0.148	0.0460	0.151
450	0.0244	0.0801	0.0249	0.0817	0.0254	0.0833	0.0259	0.0850	0.0400	0.131	0.0409	0.134
500	0.0220	0.0721	0.0224	0.0736	0.0229	0.0750	0.0233	0.0765	0.0360	0.118	0.0368	0.121
550	0.0200	0.0656	0.0204	0.0669	0.0208	0.0682	0.0212	0.0695	0.0328	0.108	0.0334	0.110
600	0.0183	0.0601	0.0187	0.0613	0.0191	0.0625	0.0194	0.0637	0.0300	0.0985	0.0306	0.101
650	0.0171	0.0560	0.0174	0.0571	0.0178	0.0582	0.0181	0.0594	0.0280	0.0918	0.0286	0.0937
700	0.0159	0.0520	0.0162	0.0530	0.0165	0.0541	0.0168	0.0552	0.0260	0.0853	0.0265	0.0870
750	0.0148	0.0485	0.0151	0.0495	0.0154	0.0505	0.0157	0.0515	0.0243	0.0796	0.0247	0.0812
800	0.0139	0.0455	0.0141	0.0464	0.0144	0.0473	0.0147	0.0483	0.0227	0.0746	0.0232	0.0761
900	0.0123	0.0405	0.0126	0.0412	0.0128	0.0421	0.0131	0.0429	0.0202	0.0663	0.0206	0.0677
1000	0.0111	0.0364	0.0113	0.0371	0.0115	0.0379	0.0118	0.0386	0.0182	0.0597	0.0186	0.0609
1100	0.0101	0.0331	0.0103	0.0337	0.0105	0.0344	0.0107	0.0351	0.0165	0.0543	0.0169	0.0554
1200	0.00925	0.0303	0.00943	0.0309	0.00962	0.0316	0.00981	0.0322	0.0152	0.0497	0.0155	0.0507
1250	0.00888	0.0291	0.00905	0.0297	0.00923	0.0303	0.00941	0.0309	0.0146	0.0477	0.0148	0.0487
1300	0.00854	0.0280	0.00870	0.0286	0.00888	0.0291	0.00905	0.0297	0.0140	0.0459	0.0143	0.0468
1400	0.00793	0.0260	0.00808	0.0265	0.00824	0.0270	0.00841	0.0276	0.0130	0.0426	0.0133	0.0435
1500	0.00740	0.0243	0.00754	0.0247	0.00769	0.0252	0.00785	0.0257	0.0121	0.0398	0.0124	0.0406
1600	0.00694	0.0228	0.00707	0.0232	0.00721	0.0237	0.00735	0.0241	0.0114	0.0373	0.0116	0.0381
1700	0.00653	0.0214	0.00666	0.0218	0.00679	0.0223	0.00692	0.0227	0.0107	0.0351	0.0109	0.0358
1750	0.00634	0.0208	0.00647	0.0212	0.00659	0.0216	0.00672	0.0221	0.0104	0.0341	0.0106	0.0348
1800	0.00617	0.0202	0.00629	0.0206	0.00641	0.0210	0.00654	0.0214	0.0101	0.0332	0.0103	0.0338
1900	0.00584	0.0192	0.00596	0.0195	0.00607	0.0199	0.00619	0.0203	0.00958	0.0314	0.00977	0.0320
2000	0.00555	0.0182	0.00566	0.0186	0.00577	0.0189	0.00588	0.0193	0.00910	0.0298	0.00928	0.0304

Not for Resale

Table 2-18
Nominal Direct-current Resistance of Class K Stranded Conductors

Conductor Size, AWG or MCM	Annealed Uncoated Copper				Annealed Coated Copper			
	20 °C		25 °C		20 °C		25 °C	
	ohms per 1000 Feet	ohms per km	ohms per 1000 Feet	ohms per km	ohms per 1000 Feet	ohms per km	ohms per 1000 Feet	ohms per km
20	10.4	34.0	10.6	34.7	11.1	36.5	11.4	37.2
18	6.53	21.4	6.66	21.8	7.01	23.0	7.15	23.4
16	4.10	13.5	4.18	13.7	4.40	14.4	4.49	14.7
14	2.57	8.44	2.62	8.61	2.76	9.07	2.82	9.24
12	1.62	5.32	1.65	5.42	1.74	5.71	1.77	5.82
10	1.02	3.34	1.04	3.41	1.09	3.59	1.12	3.66
9	0.824	2.70	0.840	2.76	0.885	2.90	0.902	2.96
8	0.653	2.14	0.666	2.19	0.701	2.30	0.715	2.35
7	0.518	1.70	0.528	1.73	0.556	1.83	0.567	1.86
6	0.411	1.35	0.419	1.38	0.441	1.45	0.450	1.48
5	0.326	1.07	0.332	1.09	0.350	1.15	0.357	1.17
4	0.258	0.848	0.263	0.864	0.277	0.910	0.283	0.928
3	0.207	0.679	0.211	0.692	0.222	0.729	0.227	0.743
2	0.164	0.538	0.167	0.549	0.176	0.578	0.180	0.589
1	0.130	0.427	0.133	0.435	0.140	0.458	0.142	0.467
1/0	0.103	0.338	0.105	0.345	0.111	0.363	0.113	0.370
2/0	0.0826	0.271	0.0842	0.276	0.0887	0.291	0.0904	0.297
3/0	0.0655	0.215	0.0668	0.219	0.0703	0.231	0.0717	0.235
4/0	0.0520	0.170	0.0530	0.174	0.0558	0.183	0.0569	0.187
250	0.0440	0.144	0.0448	0.147	0.0472	0.155	0.0481	0.158
300	0.0366	0.120	0.0374	0.123	0.0393	0.129	0.0401	0.132
350	0.0317	0.104	0.0323	0.106	0.0340	0.112	0.0347	0.114
400	0.0277	0.0910	0.0283	0.0928	0.0298	0.0977	0.0304	0.0996
450	0.0247	0.0809	0.0251	0.0825	0.0265	0.0869	0.0270	0.0886
500	0.0222	0.0728	0.0226	0.0742	0.0238	0.0782	0.0243	0.0797
550	0.0202	0.0662	0.0206	0.0675	0.0217	0.0711	0.0221	0.0725
600	0.0185	0.0607	0.0189	0.0619	0.0199	0.0651	0.0203	0.0664
650	0.0171	0.0560	0.0174	0.0571	0.0183	0.0601	0.0187	0.0613
700	0.0159	0.0520	0.0162	0.0530	0.0170	0.0558	0.0174	0.0569
750	0.0148	0.0485	0.0151	0.0495	0.0159	0.0521	0.0162	0.0531
800	0.0139	0.0455	0.0141	0.0464	0.0149	0.0489	0.0152	0.0498
900	0.0123	0.0405	0.0126	0.0412	0.0132	0.0434	0.0135	0.0443
1000	0.0111	0.0364	0.0113	0.0371	0.0119	0.0391	0.0122	0.0399

Copyright National Electrical Manufacturers Association
Provided by IHS under license with NEMA
No reproduction or networking permitted without license from IHS
Not for Resale

Table 2-19
Nominal Direct-current Resistance of Class M Stranded Conductors

Conductor Size, AWG or MCM	Annealed Uncoated Copper				Annealed Coated Copper			
	20 °C		25 °C		20 °C		20 °C	
	ohms per 1000 Feet	ohms per km	ohms per 1000 Feet	ohms per km	ohms per 1000 Feet	ohms per km	ohms per 1000 Feet	ohms per km
20	10.4	34.0	10.6	34.7	11.1	36.5	11.4	37.2
18	6.53	21.4	6.66	21.8	7.01	23.0	7.15	23.4
16	4.10	13.5	4.18	13.7	4.40	14.4	4.49	14.7
14	2.57	8.44	2.62	8.61	2.76	9.07	2.82	9.24
12	1.65	5.42	1.68	5.53	1.77	5.82	1.81	5.93
10	1.04	3.41	1.06	3.48	1.12	3.66	1.14	3.73
9	0.824	2.70	0.840	2.76	0.88	2.90	0.902	2.96
8	0.653	2.14	0.666	2.19	0.701	2.30	0.715	2.35
7	0.523	1.72	0.533	1.75	0.561	1.84	0.573	1.88
6	0.415	1.36	0.423	1.39	0.446	1.46	0.454	1.49
5	0.329	1.08	0.336	1.10	0.353	1.16	0.360	1.18
4	0.261	0.856	0.266	0.87	0.280	0.919	0.286	0.937
3	0.209	0.685	0.213	0.69	0.222	0.729	0.227	0.743
2	0.166	0.543	0.169	0.554	0.178	0.583	0.181	0.595
1	0.131	0.431	0.134	0.439	0.141	0.463	0.144	0.472
1/0	0.104	0.342	0.106	0.348	0.112	0.367	0.114	0.374
2/0	0.0834	0.279	0.0850	0.279	0.0895	0.294	0.0913	0.299
3/0	0.0661	0.217	0.0674	0.221	0.0710	0.233	0.0724	0.237
4/0	0.0524	0.172	0.0535	0.175	0.0563	0.185	0.0574	0.188
250	0.0444	0.146	0.0453	0.148	0.0477	0.156	0.0486	0.159
300	0.0370	0.121	0.0377	0.123	0.0397	0.130	0.0405	0.133
350	0.0317	0.104	0.0323	0.106	0.0340	0.112	0.0347	0.114
400	0.0277	0.0910	0.0283	0.0928	0.0298	0.0977	0.0304	0.0996
450	0.0247	0.0809	0.0251	0.0825	0.0256	0.0841	0.0262	0.0858
500	0.0222	0.0728	0.0226	0.0742	0.0238	0.0782	0.0243	0.0797
550	0.0202	0.0662	0.0206	0.0675	0.0217	0.0711	0.0221	0.0725
600	0.0185	0.0607	0.0189	0.0619	0.0199	0.0651	0.0202	0.0664
650	0.0171	0.0560	0.0174	0.0571	0.0183	0.0601	0.0187	0.0613
700	0.0159	0.0520	0.0162	0.0530	0.0170	0.0558	0.0174	0.0569
750	0.0148	0.0485	0.0151	0.0495	0.0159	0.0521	0.0162	0.0531
800	0.0139	0.0455	0.0141	0.0464	0.0149	0.0489	0.0152	0.0498
900	0.0123	0.0405	0.0126	0.0412	0.0132	0.0434	0.0135	0.0443
1000	0.0111	0.0364	0.0113	0.0371	0.0119	0.0391	0.0121	0.0399

Copyright National Electrical Manufacturers Association
Provided by IHS under license with NEMA
No reproduction or networking permitted without license from IHS

Not for Resale

Copyright National Electrical Manufacturers Association
Provided by IHS under license with NEMA
No reproduction or networking permitted without license from IHS

Table 2-20

Factors for Determining Nominal Resistance of Stranded Conductors per 1000 Feet

	All Sizes, Uncoated				Diameter of Individual Coated Copper Wires in Inches for Stranded Conductors									
					0.460 to 0.290, Inclusive		Under 0.290 to 0.103, Inclusive		Under 0.103 to 0.0201, Inclusive		Under 0.0201 to 0.0111, Inclusive		Under 0.0111 to 0.0030, Inclusive	
	Aluminum		Copper											
Minimum Conductivity, Percent	61		100		97.66		97.16		96.16		94.16		93.15	
	20°C	25°C	20°C	25°C	20°C	25°C	20°C	25°C	20°C	25°C	20°C	25°C	20°C	25°C
Concentric Stranded														
Up to 2000 MCM	17342	17691	10579	10786	10832	11045	10888	11102	11001	11217	11235	11456	11356	11579
Rope Stranded														
49 strands	17512	17865	10682	10892	10938	11153	10994	11210	11109	11327	11345	11568	...	...
133 strands	17682	18038	10786	10998	11044	11261	11101	11319	11217	11437	11455	11681	...	...
259 strands	17767	18125	10838	11051	11097	11315	11155	11374	11271	11492	11511	11737	...	...
427 strands	17852	18212	10890	11104	11150	11370	11208	11428	11325	11547	11566	11793	...	...
Over 427 strands	18022	18385	10993	11209	11257	11478	11315	11537	11432	11657	11676	11905	...	...
Bunch Stranded														
All sizes	17342	17691	10579	10786	...	...	...	...	11001	11217	11235	11456	11356	11579
Rope-stranded Bunches														
7 ropes of bunched strand	17682	18038	10786	10998	...	...	...	...	11217	11437	11455	11681	11579	11806
19, 37, or 61 ropes of bunched strand	17852	18212	10890	11104	...	...	...	...	11325	11547	11566	11793	11690	11920
7 x 7 ropes of bunched strand	18022	18385	10993	11209	...	...	...	...	11432	11657	11676	11905	11801	12033
19, 37, or 61 x 7 ropes of bunched strand	18192	18559	11097	11315	...	...	...	...	11540	11767	11786	12018	11913	12147

The direct-current resistance of the conductor per 1 000 feet at 20 °C or 25 °C shall not exceed by more than 2 percent the value calculated by dividing the appropriate factor from the above table by the nominal circular mil area of the conductor as given in 2.5.1.2. For the resistance of conductors of multiple-conductor cables, see 2.5.2.3.

The factors in the above table are based on the following:

A. Copper
   1. A resistance of 10.371 ohms—circular mil/foot at 20 °C and 10.575 ohms—circular mil/foot at 25 °C for 100 percent conductivity.
   2. Conductivity for coated copper wire corresponding to resistivities specified in ASTM B 33 or ASTM B 189 (see Appendix D).

B. Aluminum
   1. A resistance of 17.002 ohms—circular mil/foot at 20 °C and 17.345 ohms—circular mil/foot at 25 °C for 61 percent conductivity.

C. Weight and resistance allowance for stranding.
   1. For concentric stranded, Classes B, C and D, up to 2,000 MCM 2%
   2. For rope stranded, Clases G and H
      49 Strands 3%
      133 Strands 4%
      259 Strands 4.5%
      427 Strands 5%
      Over 427 Strands 6%
   3. Bunch stranded (single bunches)—all sizes 2%
   4. Rope-stranded bunches
      7 ropes of bunched strands 4%
      19, 37 or 61 ropes of bunched strands 5%
      7×7 ropes of bunched strands 6%
      19, 37 or 61×7 ropes of bunched strands 7%

C-13
Not for Resale

Part 3

INSULATION

3.1 Material. The insulation shall be a vulcanized rubber compound meeting the dimensional, electrical and physical requirements specified in Part 3. The rubber hydrocarbon in the insulation shall consist essentially of natural rubber or synthetic rubber as specified in Table 3-1. The insulation shall be applied directly to the surface of the conductor or conductor covering and shall fit tightly to that surface.

3.2 Insulation Thicknesses. The insulation thicknesses given in Table 3-2 are based on the rated circuit voltage, phase to phase, and on the cable insulation level.

The thicknesses of insulation given in Table 3-2 shall apply to single-conductor cables and to the individual conductors of multiple-conductor cables, except nonsheathed submarine cables and series lighting cables. For nonsheathed submarine cables, see 3.3. For series lighting cables, see 3.4.

The average thickness of the insulation shall be not less than that given in Table 3-2. The minimum thickness shall be not less than 90 percent of the values given in Table 3-2. (See 6.4.3 for method of measurement.)

3.2.1 The thickness of insulation for the various systems shall be determined as follows:

3.2.1.1 *For Three-phase Systems with 100 or 133 Percent Insulation Level (Grounded or Ungrounded Neutral).* Use the thickness values given in the respective columns of Table 3-2.

3.2.1.2 *For Delta Systems Rated 2001 Volts and Over Where One Leg May Be Grounded for Periods Over 1 Hour.* See 173 percent level in † note following Table 3-2.

3.2.1.3 *For Single- and Two-phase Systems With 100 Percent Insulation Level (Grounded).* Multiply the voltage to ground by 1.73 and use the resulting voltage value to select the corresponding insulation thickness in the 100 percent insulation level columns of Table 3-2.

3.2.1.4 *For Single- and Two-phase Systems With 133 Percent Insulation Level (Ungrounded).* Select the thickness for the circuit voltage (phase to phase) from the 133 percent insulation level column of Table 3-2.

3.2.1.5 *For Direct-current Systems Up to and Including 2000 Volts.* Consider the same as single-phase alternating-current systems in accordance with 3.2.1.3 and 3.2.1.4. For direct-current systems over 2000 volts, consult the manufacturer.

3.3 Additional Insulation Thickness for Nonsheathed Submarine Cables. For submarine power and control cables without metallic sheaths, 30 mils (0.76 mm) shall be added to the insulation thicknesses given in Table 3-2 for voltage classifications up through 5 kV.

3.4 Series Lighting Circuits. The average thickness of insulation for cables for use on series lighting circuits shall be not less than that given in Table 3-3. The minimum thickness shall be not less than 90 percent of the values given in Table 3-3. (See 6.4.3 for method of measurement.)

3.5 Repairs. Repairs or joints in the insulation shall conform to the limitations on insulation thickness given in 3.2. Each length of insulated conductor containing repairs or joints shall meet the electrical requirements of 3.7 through 3.17, as applicable.

Copyright National Electrical Manufacturers Association
Provided by IHS under license with NEMA
No reproduction or networking permitted without license from IHS

Not for Resale

3.6 Insulation Grades and Requirements

3.6.1 The grades of insulation and their general characteristics are given in Table 3-1.

3.6.2. Voltage Tests. Completed cable shall be tested in accordance with the paragraphs specified in the following table. The cable shall withstand, without failure, the test voltages given in Table 3-2 or 3-3, as applicable.

The test voltages shall be based on the rated voltage of the cable and the size of the conductor and not on the apparent thickness of the insulation.

3.6.3 Insulation Resistance Constants. The insulation resistance constants of insulations shall be in accordance with 3.7 to 3.17, inclusive, as applicable (see 6.25 for test method).

	Single-conductor Cables	Assemblies of Insulated Single Conductors	Assemblies of Insulated and Uninsulated Conductors	Multiple-conductor Cables with Common Covering
1. Cables Without Insulation Shield				
a. 0–2000 Volts				
▲ (1) Without metallic sheath or armor	6.24.2 or 6.24.3 or 6.24.4 or 6.24.5	6.24.2 or 6.24.3 or 6.24.4 or 6.24.5	6.24.2 or 6.24.3	6.24.2 or 6.24.3
(2) With metallic sheath or armor	6.24.2 or 6.24.3	6.24.2 or 6.24.3	6.24.2 or 6.24.3	6.24.2 or 6.24.3
b. 2001–5000 Volts	6.24.2 or 6.24.3	6.24.2 or 6.24.3	6.24.2 or 6.24.3	6.24.2 or 6.24.3
2. Cables With Insulation Shield				
a. 0–5000 Volts	6.24.2	6.24.2	6.24.2	6.24.2
b. 5001 Volts and over	6.24.2 and 6.24.3	6.24.2 and 6.24.3	6.24.2 and 6.24.3	6.24.2 and 6.24.3

▲See Part 6 for:
6.24.2 alternating-current voltage test.
6.24.3 direct-current voltage test.
6.24.4 alternating-current spark test.
6.24.5 direct-current spark test.

▲Revised 10-29-1979.

Copyright National Electrical Manufacturers Association
Provided by IHS under license with NEMA
No reproduction or networking permitted without license from IHS
Not for Resale

Copyright National Electrical Manufacturers Association
Provided by IHS under license with NEMA
No reproduction or networking permitted without license from IHS

Table 3-1
General Characteristics of Rubber Insulations

Grade of Insulation	Maximum Temperature* C	Maximum Temperature* F	Suitability for Dry or Wet Locations†	Rated Circuit Voltage, Phase to Phase‡ 100 Percent Insulation Level	Rated Circuit Voltage, Phase to Phase‡ 133 Percent Insulation Level	Complies with Paragraph	Similar to but may Differ from the Following# ASTM Pub. No.	Similar to but may Differ from the Following# UL Type
Synthetic Rubber 60 C	60	140	Dry	2000	2000	3.7	D 755	...
Synthetic Rubber, Moisture Resisting 60 C	60	140	Dry or Wet	2000	2000	3.8	D 1521	...
Natural Rubber 60 C	60	140	Dry	2000	2000	3.9	D 353	...
Synthetic Rubber 75 C	75	167	Dry	2000	2000	3.10	D 754	RH
Synthetic Rubber								
Heat Resisting 75 C, or	75	167	Dry	2000	2000	3.11	D 1520	...
Moisture Resisting 60 C	60	140	Wet	2000	2000	3.11	D 1520	...
Natural Rubber 75 C	75	167	Dry	2000	2000	3.12	D 469	RH
Synthetic Rubber, Heat and Moisture Resisting 75 C	75	167	Dry or Wet	2000	2000	3.13	D 1679	RHW
Ozone-resisting Natural or Synthetic Rubber	75	167	Dry or Wet	8000	8000	3.14	D 574	...
	70	158	Dry or Wet	28000	15000	3.14	D 574	...
Ozone-resisting Butyl Rubber	85	185	Dry or Wet	15000	15000	3.15	D 1352	...
	80	176	Dry or Wet	28000	15000	3.15	D 1352	...
Synthetic Rubber 90 C	90	194	Dry	2000	2000	3.16	D 1523	RHH
Ozone-resisting Silicone Rubber	125	257	Dry or Wet	5000	5000	3.17	...	SA
Chlorosulfonated Polyethylene	90	194	Dry or Wet	2000	2000	3.18	...	...

* For emergency overload ratings, see Appendix D. ▲
† Dry locations are environments free from moisture, such as in dry conduits, on insulators, or under continuous metallic sheath.
‡ The rated circuit voltage as covered by this table is for cables as defined in the Scope of this publication and does not apply to submarine, bore hole or specific types as covered in Part 7.
# These columns are approved by NEMA as Authorized Engineering Information.

▲ Editorially revised.

Not for Resale

Copyright National Electrical Manufacturers Association
Provided by IHS under license with NEMA
No reproduction or networking permitted without license from IHS
Not for Resale

WC 3-80
6470247 0004677 3

Table 3-2
Conductor Sizes, Insulation Thicknesses and Test Voltages for Rubber Insulations
(See Table 3-1 for Voltage Limitations of Various Grades of Insulation)

Rated Circuit Voltage Phase to Phase Volts*	Conductor Size, AWG or kcmil ▲	Insulation Thickness, 100 and 133 Percent Insulation Level†		a-c Test Voltage, kV		d-c Test Voltage, kV		d-c Spark Test Voltage, kV for 100 and 133 Percent Insulation Levels†		a-c Spark Test Voltage, kV for 100 and 133 Percent Insulation Levels†
				Other Than Ozone-resisting Insulations	Ozone-resisting Insulations	Other Than Ozone-resisting Insulations	Ozone-resisting Insulations			
		mils	mm	100 and 133 Percent Insulation Level†	100 and 133 Percent Insulation Level†	100 and 133 Percent Insulation Level†	100 and 133 Percent Insulation Level†	Other Than Ozone-resisting Insulations	Ozone-resisting Insulations	
0–600	18–16	30	0.76	1.0	1.0	...	...	...	...	...
	14–9	45	1.14	3.0	4.5	9.0	13.5	9.0	13.5	7.5
	8–2	60	1.52	3.5	6.0	10.5	18.0	10.5	18.0	10.0
	1–4/0	80	2.03	4.0	7.5	12.0	22.5	12.5	22.5	12.5
	225–500	95	2.41	5.0	8.5	15.0	25.5	15.0	25.5	15.0
	525–1000	110	2.79	6.0	10.0	18.0	30.0	18.0	30.0	17.5
	Over 1000	125	3.18	7.0	11.5	21.0	34.5	21.0	34.5	20.0
601–1000	14–8	60	1.52	5.0	6.0	15.0	18.0	15.0	18.0	...
	7–2	80	2.03	6.0	7.5	18.0	22.5	18.0	22.5	...
	1–4/0	95	2.41	7.5	8.5	22.5	25.5	22.5	25.5	...
	225–500	110	2.79	9.0	10.0	27.0	30.0	27.0	30.0	...
	525–1000	125	3.18	10.0	11.5	30.0	34.5	30.0	34.5	...
	Over 1000	140	3.56	11.0	11.5	33.0	34.5	33.0	34.5	...
1001–2000	14–8	80	2.03	6.0	7.5	18.0	22.5	18.0	22.5	12.5
	7–2	95	2.41	7.5	8.5	22.5	25.5	22.5	25.5	15.0
	1–4/0	110	2.79	9.0	10.0	27.0	30.0	27.0	30.0	17.5
	225–500	125	3.18	10.0	11.5	30.0	34.5	30.0	34.5	20.0
	Over 500	140	3.56	11.0	11.5	33.0	34.5	33.0	34.5	22.5
		100 Percent Insulation Level†		133 Percent Insulation Level†			100 Percent Insula-tion Level†	133 Percent Insula-tion Level†	100 Percent Insula-tion Level†	133 Percent Insula-tion Level†			
		mils	mm	mils	mm								
2001–5000**	8–4/0	155	3.94	155	3.94	...	13	13	...	35††	35††	...	...	...
	225–1000	170	4.32	170	4.32	...	13	13	...	35††	35††	...	...	...
	Over 1000	190	4.83	190	4.83	...	13	13	...	35††	35††	...	...	...
5001–8000	6 and over	190	4.83	250	6.35	...	18	22	...	45	45	...	...	...
8001–15000	2 and over	295	7.49	...	...	...	27	...	...	70	...	...	...	...
	1 and over	...	...	420	10.67	...	...	33	...	...	80	...	...	...
15001–25000	1 and over	455	11.56	...	...	...	38	...	...	100	...	...	...	...
25001–28000	1 and over	500	12.70	...	...	...	42	...	...	105	...	...	...	...

Editorially revised.

Copyright National Electrical Manufacturers Association
Provided by IHS under license with NEMA
No reproduction or networking permitted without license from IHS
Not for Resale

Note 1–To limit the maximum voltage stress on the insulation at the conductor to a safe value, the minimum size of the conductor shall be in accordance with Table 3-2.

For cables or conditions of service where mechanical stresses govern, such as in submarine cables or long vertical risers, these minimum conductor sizes may not be strong enough.#

▲ Note 2—The a-c voltages are rms values.#

▲ Note 3—The a-c spark test voltages are equal to or 2.5 kV higher than those in Table 71.1, UL Standard 44, *Rubber Insulated Wires and Cables*, 10th Edition.#

*The actual operating voltage shall not exceed the rated circuit voltage by more than (a) 5 percent during continuous operation or (b) 10 percent during emergencies lasting not more than 15 minutes.

†The selection of the cable insulation level to be used in a particular installation shall be made on the basis of the applicable phase-to-phase voltage and the general system category as outlined in the following paragraphs:

100 Percent Level -Cables in this category may be applied where the system is provided with relay protection such that ground faults will be cleared as rapidly as possible, but in any case within 1 minute. While these cables are applicable to the great majority of cable installations which are on grounded systems, they may be used also on other systems for which the application of cables is acceptable‡ provided the above clearing requirements are met in completely de-energizing the faulted section.

133 Percent Level–This insulation level corresponds to that formerly designated for ungrounded systems. Cables in this category may be applied in situations where the clearing time requirements of the 100 percent level category cannot be met, and yet there is adequate assurance that the faulted section will be de-energized in a time not exceeding 1 hour. Also they may be used when additional insulation strength over the 100 percent level category is desirable.

173 Percent Level–Cables in this category should be applied on systems where the time required to de-energize a grounded section is indefinite. Their use is recommended also for resonant grounded systems. Consult the manufacturer for insulation thicknesses.

‡In common with other electrical equipment, the use of cables is not recommended on systems where the ratio of the zero to positive phase reactance of the system at the point of cable application lies between –1 and –40 since excessively high voltages may be encountered in the case of ground faults.

**Refer to 4.1 and 4.2 for limitations on the use of non-shielded cables rated 2001–5000 volts.

††Not applicable to shielded cables; see 3.6.2.

#This paragraph is approved by NEMA as Authorized Engineering Information.

▲Added 10-29-1979.

Copyright National Electrical Manufacturers Association
Provided by IHS under license with NEMA
No reproduction or networking permitted without license from IHS
Not for Resale

Table 3-3
Insulation Thickness for Series Lighting Circuits

Circuit Voltage, Volts*	Conductor Size, AWG	Insulation Thicknesses†		a-c Test Voltage, kV		d-c Test Voltage, kV		d-c Spark Test Voltage, kV	
		mils	mm	Other Than Ozone-resisting Insulations	Ozone-resisting Insulations	Other Than Ozone-resisting Insulations	Ozone-resisting Insulations	Other Than Ozone-resisting Insulations	Ozone-resisting Insulations
0–1000	10-8	60	1.52	5.0	6.0	15.0	18.0	15.0	18.0
	6-4	80	2.03	6.0	7.5	18.0	22.5	18.0	22.5
1001–2000	10-8	80	2.03	6.0	7.5	18.0	22.5	18.0	22.5
	6-4	95	2.41	7.5	8.5	22.5	25.5	22.5	25.5
2001–3000	10-8	110	2.79	...	10	...	30	...	...
	6-4	125	3.18	...	10	...	30	...	...
3001–6000	8-4	155	3.94	...	13	...	35	...	...
6001–9000	8-4	205	5.21	...	19	...	55	...	...

The following tabulation of series lighting transformer ratings is representative of those in common use‡:

Rating, Kilowatts	6.6 Ampere Secondary		20 Ampere Secondary	
	Full-load Voltage, Volts, With Protectors	Open-circuit Voltage, Volts, Without Protectors	Full-load Voltage, Volts, With Protectors	Open-circuit Voltage, Volts, Without Protectors
10	1515	2090	500	690
15	2272	3090	750	1020
20	3030	4115	1000	1360
25	3787	5110	1250	1685
30	4545	6130	1500	2020
40	6060	8180	2000	2700

*The highest circuit voltage at each step represents the maximum operating voltage recommended for the thickness of insulation.
†If protectors are employed, the thickness shall be determined by the full-load voltage. If the circuit is to be operated without protectors, the thickness shall be determined by the open-circuit voltage.
‡This paragraph is approved by NEMA as Authorized Engineering Information.

3.7 Synthetic Rubber 60°C. This insulation is suitable for use at conductor temperatures not exceeding 60°C (140°F) and in dry locations only.

▲3.7.1 Physical and Aging Requirements (See 6.4). The cross-linked insulation shall meet the requirements given in Column A except that, on test specimens taken from finished cables having rubber or other thermosetting jackets or braids which have been treated in accordance with 4.9, the insulation shall meet the requirements of Column B.

	Column A	Column B
▲ Physical requirements		
Tensile strength, minimum		
psi	700	600
MPa	4.83	4.14
Elongation at rupture, minimum, percent	300	250
▲ Aging requirements after oxygen pressure test at 70°C ± 1°C for 96 hours		
Tensile strength, minimum, percentage of unaged value	75	75
Elongation at rupture, minimum, percentage of unaged value	65	65

The foregoing values are applicable only to insulations having a nominal thickness of 30 mils (0.76 mm) or greater.

3.7.2 Electrical Requirements

3.7.2.1 *Voltage Tests. See 3.6.2.*

▲3.7.2.2 ***Insulation Resistance Test (See 6.25).*** Each insulated conductor in the completed cable shall have an insulation resistance not less than that corresponding to a constant of 2000 at 15.6°C (60°F). The insulation resistance test is not required when the direct-current spark test is performed (see 3.6.2).

Where a nonconducting separator is applied between the conductor and the insulation, or where an insulated conductor is covered with a nonmetallic jacket, the insulation resistance shall be not less than 60 percent of that required for the primary insulation, based on the thickness of that insulation.

3.8 Synthetic Rubber, Moisture Resisting, 60°C. This insulation is suitable for operation at conductor temperatures not exceeding 60°C (140°F) in dry or wet locations.

3.8.1 Physical and Aging Requirements (See 6.4). The cross-linked insulation shall meet the requirements given in Column A except that, on test specimens taken from finished cables having rubber or other thermosetting jackets or braids which have been treated in accordance with 4.9, the insulation shall meet the requirements of Column B.

	Column A	Column B
▲ Physical requirements		
Tensile strength, minimum		
psi	700	600
MPa	4.83	4.14
Elongation at rupture, minimum, percent	300	250
▲ Aging requirements after oxygen pressure test at 70°C ± 1°C for 96 hours		
Tensile strength, minimum, percentage of unaged value	75	75
Elongation at rupture, minimum, percentage of unaged value	65	65

The foregoing values are applicable only to insulations having a nominal thickness of 30 mils (0.76 mm) or greater.

3.8.2. Electrical Requirements

▲3.8.2.1 *Voltage Tests (See 3.6.2).*

▲3.8.2.2 ***Insulation Resistance Test (See 6.25).*** Each insulated conductor in the completed cable shall have an insulation resistance not less than that corresponding to a constant of 2000 at 15.6°C (60°F). The insulation resistance test is not required when the direct-current spark test is performed (see 3.6.2).

Where a nonconducting separator is applied between the conductor and the insulation, or where an insulated conductor is covered with a nonmetallic jacket, the insulation resistance shall be not less than 60 percent of that required for the primary insulation, based on the thickness of that insulation.

▲Editorially revised.

Copyright National Electrical Manufacturers Association
Provided by IHS under license with NEMA
No reproduction or networking permitted without license from IHS

Not for Resale

3.8.3 Accelerated Water Absorption Requirements (See 6.9). The insulation shall meet the following requirements:

Electrical Method	
EM-60, increase in capacitance, maximum, percent	
1 to 14 days	10.0
7 to 14 days	3.0
EM-60, stability factor after 14 days, maximum*	1.0
EM-60, alternate to stability factor—stability factor difference, 1 to 14 days, maximum*	0.5

*Only one of these two requirements need be satisfied, not both.

3.9 Natural Rubber 60 °C. This insulation is suitable for operation at conductor temperatures not exceeding 60°C (140°F) and in dry locations only.

▲3.9.1 Physical and Aging Requirements (See 6.4). The insulation shall meet the requirements given in Column A except that, on test specimens taken from finished cables having rubber or other thermosetting jackets or braids which have been treated in accordance with 4.9, the insulation shall meet the requirements of Column B.

	Column A	Column B
▲Physical requirements		
Tensile strength, minimum		
psi	1200	900
MPa	8.27	6.21
Tensile stress at 200 percent elongation, minimum		
psi	300	...
MPa	2.07	...
Elongation at rupture, minimum, percent	400	300
Set, maximum, percent	20	20
▲Aging requirements		
After air oven test at 70°C ± 1°C for 96 hours—tensile strength and elongation at rupture, minimum, percentage of unaged value	85	75
After oxygen pressure test at 70°C ± 1°C for 96 hours—tensile strength and elongation at rupture, minimum, percentage of unaged value	75	65

The foregoing values are applicable only to insulations having a nominal thickness of 30 mils (0.76 mm) or greater.

3.9.2 Electrical Requirements

3.9.2.1 *Voltage Tests (See 3.6.2).*

3.9.2.2 *Insulation Resistance Test (See 6.25).* Each insulated conductor in the completed cable shall have an insulation resistance not less than that corresponding to a constant of 10560 at 15.6°C (60°F). The insulation resistance test is not required when the direct-current spark test or the alternating-current spark test is performed (see 3.6.2).

Where a nonconducting separator is applied between the conductor and the insulation, or where an insulated conductor is covered with a nonmetallic jacket, the insulation resistance shall be not less than 60 percent of that required for the primary insulation, based on the thickness of that insulation.

3.10 Synthetic Rubber 75°C. This insulation is suitable for use at conductor temperatures not exceeding 75°C (167°F) and in dry locations only.

3.10.1 Physical and Aging Requirements (See 6.4). The insulation shall meet the requirements given in Column A except that, on test specimens taken from finished cables having rubber or other thermosetting jackets or braids which have been treated in accordance with 4.9, the insulation shall meet the requirements of Column B.

	Column A	Column B
▲Physical requirements		
Tensile strength, minimum		
psi	700	600
MPa	4.83	4.14
Elongation at rupture, minimum, percent	300	250
▲Aging requirements		
After air pressure heat test at 127°C ± 1°C for 20 hours—tensile strength and elongation at rupture, minimum, percentage of unaged value	50	50
After oxygen pressure test at 80°C ± 1°C for 168 hours—tensile strength and elongation at rupture, minimum, percentage of unaged value	50	50

The foregoing values are applicable only to insulations having a nominal thickness of 30 mils (0.76 mm) or greater.

3.10.2 Electrical Requirements

3.10.2.1 *Voltage Tests (See 3.6.2).*

3.10.2.2 *Insulation Resistance Test.* Each insulated conductor in the completed cable shall be

▲ Editorially revised.

Copyright National Electrical Manufacturers Association
Provided by IHS under license with NEMA
No reproduction or networking permitted without license from IHS

Not for Resale

tested in accordance with 6.25 and shall have an insulation resistance not less than that corresponding to a constant of 2000 at 15.6°C (60°F). The insulation resistance test is not required when the direct-current spark test or the alternating-current spark test is performed (see 3.6.2).

Where a nonconducting separator is applied between the conductor and the insulation, or where an insulated conductor is covered with a nonmetallic jacket, the insulation resistance shall be not less than 60 percent of that required for the primary insulation, based on the thickness of that insulation.

3.11 Synthetic Rubber, Heat Resisting 75°C or Moisture Resisting 60°C. This insulation is suitable for use at conductor temperatures not exceeding 75°C (167°F) in dry locations and 60°C (140°F) in wet locations.

3.11.1 Physical and Aging Requirements. When tested in accordance with 6.1 and 6.2, the vulcanized insulation shall meet the requirements given in Column A except that, on test specimens taken from finished cables having rubber or other thermosetting jackets or braids which have been treated in accordance with 4.9, the insulation shall meet the requirements of Column B.

	Column A	Column B
Physical requirements (see 6.4)		
Tensile strength, minimum		
psi	700	600
kgf/mm²	0.49	0.42
Elongation at rupture, minimum, percent	300	250
Aging requirements (see 6.4)		
After air pressure heat test at 127°C ● 1°C for 20 hours—tensile strength and elongation at rupture, minimum, percentage of unaged value	50	50
After oxygen pressure test at 80°C ± 1°C for 168 hours—tensile strength and elongation at rupture, minimum, percentage of unaged value	50	50

The foregoing values are applicable only to insulations having a nominal thickness of 30 mils (0.76 mm) or greater.

3.11.2 Electrical Requirements

3.11.2.1 *Voltage Tests. See 3.6.2.*

3.11.2.2 *Insulation Resistance Test.* Each insulated conductor in the completed cable shall be tested in accordance with 6.25 and shall have an insulation resistance not less than that corresponding to a constant of 2000 at 15.6°C (60°F). The insulation resistance test is not required when the direct-current spark test or the alternating-current spark test is performed (see 3.6.2).

Where a nonconducting separator is applied between the conductor and the insulation, or where an insulated conductor is covered with a nonmetallic jacket, the insulation resistance shall be not less than 60 percent of that required for the primary insulation, based on the thickness of that insulation.

▲ 3.11.3 Accelerated Water Absorption Requirements (See 6.9). The insulation shall meet the following requirements, when tested in accordance with the electrical method specified in 6.9:

Electrical Method	
EM-60, increase in capacitance, maximum, percent:	
1 to 14 days	10.0
7 to 14 days	3.0
EM-60, stability factor after 14 days, maximum*	1.0
EM-60, alternate to stability factor—stability factor difference, 1 to 14 days, maximum*	0.5

*Only one of these two requirements need be satisfied not both.

3.12 Natural Rubber 75°C. This insulation is suitable for use at conductor temperatures not exceeding 75°C (167°F) and in dry locations only.

3.12.1 Physical and Aging Requirements. When tested in accordance with 6.1 and 6.2, the vulcanized insulation shall meet the requirements given in Column A except that, on test specimens taken from finished cable having rubber or other thermosetting jackets or braids which have been treated in accordance with 4.9, the insulation shall meet the requirements of Column B.

	Column A	Column B
Physical requirements (see 6.4)		
Tensile strength, minimum		
psi	1500	1200
kgf/mm²	1.05	0.84
Tensile stress at 200 percent elongation, minimum		
psi	400	300
kgf/mm²	0.28	0.21
Elongation at rupture, minimum, percent	400	300
Set, maximum, percent	20	20
Aging requirements (see 6.4)		
After air pressure heat test at 127°C ± 1°C for 20 hours—tensile strength and elongation at rupture, minimum, percentage of unaged value	50	50
After oxygen pressure test at 80°C ± 1°C for 168 hours—tensile strength and elongation at rupture, minimum, percentage of unaged value	75	65

▲ Revised 5-12-1982.

Copyright National Electrical Manufacturers Association
Provided by IHS under license with NEMA
No reproduction or networking permitted without license from IHS

Not for Resale

The foregoing values are applicable only to insulations having a nominal thickness of 30 mils (0.76 mm) or greater.

3.12.2 Electrical Requirements

3.12.2.1 *Voltage Tests. See 3.6.2.*

3.12.2.2 *Insulation Resistance Test.* Each insulated conductor in the completed cable shall be tested in accordance with 6.25 and shall have an insulation resistance not less than that corresponding to a constant of 10560 at 15.6°C (60°F). The insulation resistance test is not required when the direct-current spark test or the alternating-current spark test is performed (see 3.6.2).

Where a nonconducting separator is applied between the conductor and the insulation, or where an insulated conductor is covered with a nonmetallic jacket, the insulation resistance shall be not less than 60 percent of that required for the primary insulation, based on the thickness of that insulation.

3.13 Synthetic Rubber, Heat and Moisture Resisting, 75°C. This insulation is suitable for use at conductor temperatures not exceeding 75°C (167°F) and in dry or wet locations.

3.13.1 Physical and Aging Requirements. When tested in accordance with 6.1 and 6.2, the vulcanized insulation shall meet the following requirements.

Physical requirements (see 6.4)	
Tensile strength, minimum	
psi	700
kgf/mm²	0.49
Elongation at rupture, minimum, percent	300
Set, maximum, percent	25
Aging requirements (see 6.4)	
After air pressure heat test at 127°C ± 1°C for 20 hours—tensile strength and elongation at rupture, minimum, percentage of unaged value	50
After oxygen pressure test at 80°C ± 1°C for 168 hours—tensile strength and elongation at rupture, minimum, percentage of unaged value	50

The foregoing values are applicable only to insulations having a nominal thickness of 30 mils (0.76 mm) or greater.

3.13.2 Electrical Requirements

3.13.2.1 *Voltage Tests. See 3.6.2.*

3.13.2.2 *Insulation Resistance Test.* Each insulated conductor in the completed cable shall be tested in accordance with 6.25 and shall have an insulation resistance not less than that corresponding to a constant of 4000 at 15.6°C (60°F). The insulation resistance test is not required when the direct-current spark test or the alternating-current spark test is performed (see 3.6.2).

Where a nonconducting separator is applied between the conductor and the insulation, or where an insulated conductor is covered with a nonmetallic jacket, the insulation resistance shall be not less than 60 percent of that required for the primary insulation, based on the thickness of that insulation.

▲ **3.13.3 Accelerated Water Absorption Requirements (See 6.9).** The insulation shall meet the following requirements when tested in accordance with the electrical method specified in 6.9, except that for the electrical tests the water shall be maintained at 75°C.

Electrical Method	
EM-60, dielectric constant after one day, maximum	6.0
EM-60, increase in capacitance, maximum, percent:	
1 to 14 days	10.0
7 to 14 days	4.0
EM-60, stability factor after 14 days, maximum*	1.0
EM-60, alternate to stability factor—stability factor difference, 1 to 14 days, maximum*	0.5

*Only one of these two requirements needs to be satisfied, not both.

3.14 Ozone-resisting Natural or Synthetic Rubber. This insulation is suitable for the transmission and distribution of electrical energy, under normal conditions of installation, at not over 15000 volts between phases at an insulation level of 133 percent or 28000 volts between phases at an insulation level of 100 percent. The conductor temperature shall not exceed 75°C (167°F) for voltages of 8000 volts or less at an insulation level of either 100 or 133 percent and shall not exceed 70°C (158°F) for voltages of 28000 volts or less at an insulation level of 100 percent or 15000 volts or less at an insulation level of 133 percent.

3.14.1 Physical and Aging Requirements. When tested in accordance with 6.1 and 6.2, the vulcanized insulation shall meet the following requirements.

▲ Revised 5-12-1982.

Copyright National Electrical Manufacturers Association
Provided by IHS under license with NEMA
No reproduction or networking permitted without license from IHS

Not for Resale

Physical requirements (see 6.4)	
Tensile strength, minimum	
psi	450
kgf/mm²	0.32
Elongation at rupture, minimum, percent	250
Set, maximum, percent	25
Aging requirements (see 6.4)	
After air oven test at 70°C ± 1°C for 168 hours	
Tensile strength, minimum	
psi	400
kgf/mm²	0.28
Elongation at rupture, minimum, percent	200
After oxygen pressure test at 70°C ± 1°C for 48 hours	
Tensile strength, minimum	
psi	400
kgf/mm²	0.28
Elongation at rupture, minimum, percent	200

The foregoing values are applicable only to insulations having a nominal thickness of 30 mils (0.76 mm) or greater.

3.14.2 Electrical Requirements

3.14.2.1 *Voltage Tests. See 3.6.2.*

3.14.2.2 *Insulation Resistance Test.* Each insulated conductor in the completed cable shall be tested in accordance with 6.25 and shall have an insulation resistance not less than that corresponding to a constant of 2000 at 15.6°C (60°F). The insulation resistance test is not required when the direct-current spark test or the alternating-current spark test is performed (see 3.6.2).

Where a nonconducting separator is applied between the conductor and the insulation, or where an insulated conductor is covered with a nonmetallic jacket, the insulation resistance shall be not less than 60 percent of that required for the primary insulation, based on the thickness of that insulation.

3.14.2.3 *Partial-discharge Extinction Level (See 6.26).* Each length of completed power cable rated for service at 2001 volts and above with insulation shielding on the individual conductors shall comply with the following table.

Rated Circuit Voltage, Phase to Phase, Volts	Minimum Partial-discharge Extinction Level, kV	
	100 Percent Insulation Level	133 Percent Insulation Level
2001–5000	4.0	5.0*
5001–8000	6.0	8.0
8001–15000	11.0	15.0
15001–25000	19.0	25.0
25001–28000	21.0	...

*Unless otherwise indicated, the cable will be rated at 100 percent insulation level.

▲ Revised 5-12-1982.

3.14.3 Requirements for Tests on Samples. When required and when tested in accordance with the methods described in 6.2, samples of the insulated conductor shall meet the following requirements:

3.14.3.1 *Short-time Dielectric Strength Test (See 6.5).* Test specimens of cable rated at 5001 volts and above shall withstand for 5 minutes an alternating-current test voltage which is double the voltage given in Table 3-2.

3.14.3.2 *Cold-bending and Long-time Dielectric Strength Test (See 6.6).* Test specimens of cable rated at 5001 volts and above shall withstand for 2 hours the alternating-current test voltage given in Table 3-2.

3.14.3.3 *Capacity and Power Factor (See 6.7).* The insulation on cables rated at 5001 volts and above shall show a specific inductive capacity not exceeding 5.0 and a power factor not exceeding 5.0 percent.

3.14.3.4 *Ozone Resistance (See 6.8).* The insulation shall show no cracks after 3 hours exposure to an ozone concentration of not less than 0.010 nor more than 0.015 percent by volume.

▲ **3.14.3.5** *Accelerated Water Absorption (See 6.9).* The insulation shall meet the following requirements when tested in accordance with the electrical (EM-60) method specified in 6.9:

Increase in capacitance, maximum, percent	
1 to 14 days	10.0
7 to 14 days	3.0
Stability factor after 14 days, maximum*	1.0
Alternate to stability factor—stability factor difference, 1 to 14 days, maximum*	0.5

*Only one of these two requirements needs to be satisfied, not both.

3.15 Ozone-resisting Butyl Rubber. This insulation is suitable for the transmission and distribution of electrical energy, under normal conditions of installation, at not more than 15000 volts between phases at an insulation level of 133 percent or 28000 volts between phases at an insulation level of 100 percent. The conductor temperature shall not exceed 85°C (185°F) for an operating voltage of 15000 volts or less, and shall not exceed 80°C (176°F) for an operating voltage above 15000 volts.

3.15.1 Physical and Aging Requirements. When tested in accordance with 6.1 and 6.2, the vulcan-

Copyright National Electrical Manufacturers Association
Provided by IHS under license with NEMA
No reproduction or networking permitted without license from IHS
Not for Resale

ized insulation shall meet the following requirements.

Physical requirements (see 6.4)	
Tensile strength, minimum	
psi	600
kgf/mm²	0.42
Elongation at rupture, minimum, percent	350
Set, maximum, percent	25
Aging requirements (see 6.4)	
After air oven test at 100°C ± 1°C for 168 hours—tensile strength and elongation at rupture, minimum, percentage of unaged value	60
After air pressure heat test at 127°C ± 1°C for 40 hours—tensile strength and elongation at rupture, minimum, percentage of unaged value	50

The foregoing values are applicable only to insulations having a nominal thickness of 30 mils (0.76 mm) or greater.

3.15.2 Electrical Requirements

3.15.2.1 *Voltage Tests. See 3.6.2.*

3.15.2.2 *Insulation Resistance Test.* Each insulated conductor in the completed cable shall be tested in accordance with 6.25 and shall have an insulation resistance not less than that corresponding to a constant of 20000 at 15.6°C (60°F). The insulation resistance test is not required when the direct-current spark test or the alternating-current spark test is performed (see 3.6.2).

Where a nonconducting separator is applied between the conductor and the insulation, or where an insulated conductor is covered with a nonmetallic jacket, the insulation resistance shall be not less than 60 percent of that required for the primary insulation, based on the thickness of that insulation.

3.15.2.3 *Partial-discharge Extinction Level (See 6.26).* Each length of completed power cable rated for service at 2001 volts and above with insulation shielding on the individual conductors shall comply with the following table:

Rated Circuit Voltage, Phase to Phase, Volts	Minimum Partial-discharge Extinction Level, kV	
	100 Percent Insulation Level	133 Percent Insulation Level
2001–5000	4.0	5.0*
5001–8000	6.0	8.0
8001–15000	11.0	15.0
15001–25000	19.0	25.0
25001–28000	21.0	...

*Unless otherwise indicated, the cable will be rated at 100 percent insulation level.

▲ Revised 5-12-1982.

3.15.3 Requirements for Tests on Samples. When required and when tested in accordance with the methods described in 6.2, samples of the insulated conductor shall meet the following requirements:

3.15.3.1 *Capacity and Power Factor (See 6.7).* The insulation on cables rated at 5001 volts and above shall show a specific inductive capacity not exceeding 4.5 and a power factor not exceeding 3.5 percent.

3.15.3.2 *Ozone Resistance (See 6.8).* The insulation shall show no cracks after 3 hours exposure to an ozone concentration of not less than 0.025 nor more than 0.030 percent by volume.

▲ **3.15.3.3** *Accelerated Water Absorption (See 6.9).* The insulation shall meet the following requirements when tested in accordance with the electrical (EM-60) method specified in 6.9, except that the water shall be maintained at 75°C ± 1°C in the EM-60 test.

Electrical Method	
Increase in capacitance, maximum, percent	
1 to 14 days	5.0
7 to 14 days	3.0
Stability factor after 14 days, maximum*	1.0
Alternate to stability factor—stability factor difference, 1 to 14 days, maximum*	0.5

*Only one of these two requirements needs to be satisfied, not both.

3.16 Synthetic Rubber 90°C. This insulation is suitable for use at conductor temperatures not exceeding 90°C (194°F) and in dry locations only.

3.16.1 Physical and Aging Requirements. When tested in accordance with 6.1 and 6.2, the vulcanized insulation shall meet the following requirements:

Physical requirements (see 6.4)	
Tensile strength, minimum	
psi	700
kgf/mm²	0.49
Elongation at rupture, minimum, percent	300
Set, maximum, percent	25
Aging requirements (see 6.4)	
After air oven test at 121°C ± 1°C for 168 hours—tensile strength and elongation at rupture, minimum, percentage of unaged value	60
After air pressure heat test at 127°C ± 1°C for 42 hours—tensile strength and elongation at rupture, minimum, percentage of unaged value	50

Copyright National Electrical Manufacturers Association
Provided by IHS under license with NEMA
No reproduction or networking permitted without license from IHS

Not for Resale

The foregoing values are applicable only to insulations having a nominal thickness of 30 mils (0.76 mm) or greater.

3.16.2 Electrical Requirements

3.16.2.1 *Voltage Tests.* *See 3.6.2.*

3.16.2.2 *Insulation Resistance Test.* Each insulated conductor in the completed cable shall be tested in accordance with 6.25 and shall have an insulation resistance not less than that corresponding to a constant of 4000 at 15.6°C (60°F). The insulation resistance test is not required when the direct-current spark test or the alternating-current spark test is performed (see 3.6.2).

Where a nonconducting separator is applied between the conductor and the insulation, or where an insulated conductor is covered with a nonmetallic jacket, the insulation resistance shall be not less than 60 percent of that required for the primary insulation, based on the thickness of that insulation.

3.17 Ozone-resisting Silicone Rubber. This insulation is suitable for the transmission and distribution of electrical energy for conductor sizes up to and including 1000 MCM, under normal conditions of installation at not more than 5000 volts between phases. The conductor temperature shall not exceed 125°C (257°F).

Because the maximum temperature rating of this insulation is 125°C (257°F), all of the coverings given in Part 4 are not necessarily suitable. Consult the manufacturer for further information.*

Conductor shielding is not required.

Insulation shielding is required to perform only those functions which are described in Appendix K, par. K2.2, items c, d and e.

* This paragraph is approved by NEMA as Authorized Engineering Information.

3.17.1 Physical and Aging Requirements. When tested in accordance with 6.1 and 6.2, the vulcanized insulation shall meet the following requirements:

Physical requirements (see 6.4)	
Tensile strength, minimum	
psi	800
kgf/mm²	0.56
Elongation at rupture, minimum, percent	250
Aging requirements (see 6.4) after air oven test at 200°C ± 2°C for 168 hours	
Tensile strength, minimum	
psi	500
kgf/mm²	0.35
Elongation at rupture, minimum, percent	125

▲ Revised 5-12-1982.

The foregoing values are applicable only to insulations having a nominal thickness of 30 mils (0.76 mm) or greater.

3.17.2 Electrical Requirements

3.17.2.1 *Voltage Tests.* *See 3.6.2.*

3.17.2.2 *Insulation Resistance Test.* Each insulated conductor in the completed cable shall be tested in accordance with 6.25 and shall have an insulation resistance not less than that corresponding to a constant of 4000 at 15.6°C (60°F). The insulation resistance test is not required when the direct-current spark test or the alternating-current spark test is performed (see 3.6.2).

Where a nonconducting separator is applied between the conductor and the insulation, or where an insulated conductor is covered with a nonmetallic jacket, the insulation resistance shall be not less than 60 percent of that required for the primary insulation, based on the thickness of that insulation.

3.17.2.3 *Partial-discharge Extinction Level (See 6.26).* Each length of completed power cable rated for service at 2001–5000 volts, with insulation shielding on the individual conductors, shall have a minimum partial-discharge extinction level of 4.0 kV for an insulation level of 100 percent and 5.0 kV for an insulation level of 133 percent. Unless otherwise indicated, the cable will be rated at 100 percent insulation level.

3.17.3 Requirements for Tests on Samples. When required and when tested in accordance with the methods described in 6.2, samples of the insulated conductor shall meet the following requirements:

3.17.3.1 *Ozone Resistance (See 6.8).* The insulation shall show no cracks after 3 hours exposure to an ozone concentration of not less than 0.025 nor more than 0.030 percent by volume.

▲ **3.17.3.2** *Accelerated Water Absorption (See 6.9).* The insulation shall meet the following requirements when tested in accordance with the electrical (EM-60) method specified in 6.9, except that the water shall be maintained at 75°C ± 1°C in the EM-60 test:

Electrical Method—Increase in capacitance, maximum, percent	
1 to 14 days	10.0
7 to 14 days	3.0

Copyright National Electrical Manufacturers Association
Provided by IHS under license with NEMA
No reproduction or networking permitted without license from IHS

Not for Resale

3.18 Chlorosulfonated Polyethylene. This insulation, with or without a covering, is suitable for use at conductor temperatures not exceeding 90°C (194°F) and at voltages up to 2000 volts between phases, in wet or dry locations.

3.18.1 Physical and Aging Requirements. When tested in accordance with 6.1 and 6.2, the vulcanized insulation shall meet the following requirements:

Physical requirements (see 6.4)	
Tensile strength, minimum	
psi	1500
kgf/mm^2	1.05
Elongation at rupture, minimum, percent	300
Aging requirements (see 6.4)	
After air-oven test at 121°C for 168 hours	
Tensile strength, minimum, percentage of unaged value	85
Elongation at rupture, minimum, percentage of unaged value	50
After oil-immersion test at 121°C for 18 hours	
Tensile strength, minimum, percentage of unaged value	60
Elongation at rupture, minimum, percentage of unaged value	60
Cold bend, −25°C ± 2°C (see 6.4.13.8)	no cracks

The foregoing values are applicable only to insulations having a nominal thickness of 30 mils (0.76 mm) or greater.

3.18.2 Electrical Requirements

3.18.2.1 *Voltage Tests. See 3.6.2.*

3.18.2.2 *Insulation Resistance Test.* Each insulated conductor in the completed cable shall be tested in accordance with 6.25 and shall have an insulation resistance not less than that corresponding to a constant of 1000 at 15.6°C (60°F). The insulation resistance test is not required when the direct-current spark test or the alternating-current spark test is performed (see 3.6.2).

Where a nonconducting separator is applied between the conductor and the insulation, or where an insulated conductor is covered with a nonmetallic jacket, the insulation resistance shall be not less than 60 percent of that required for the primary insulation, based on the thickness of that insulation.

3.18.3 Requirements for Tests on Samples. When required and when tested in accordance with the methods described in 6.2, samples of the insulated conductor shall meet the following requirements:

▲ **3.18.3.1** *Accelerated Water Absorption (See 6.9).* The insulation shall meet the following requirements when tested in accordance with the electrical method specified in 6.9, except that for the electrical test the water shall be maintained at 75 °C ± 1 °C.

Electrical Method	
Dielectric constant after 1 day, maximum	10.0
Increase in capacitance, maximum, percent	
1 to 14 days	6.0
7 to 14 days	2.0
Stability factor after 14 days, maximum*	1.0
Alternate to stability factor—stability factor difference, 1 to 14 days, maximum*	0.5

*Only one of these two requirements needs to be satisfied, not both.

3.18.3.2 *Flame Resistance for Sizes 14 AWG and Larger (See 6.19.6).* If more than 25 percent of the extended portion of the indicator is burned after the five applications of the flame, the wire is considered to have conveyed flame. The duration of burning of the specimen after the fifth application of the flame shall be noted, and any specimen which continues to burn for more than 1 minute shall be considered to have failed this test.

▲ Revised 5-12-1982.

Copyright National Electrical Manufacturers Association
Provided by IHS under license with NEMA
No reproduction or networking permitted without license from IHS

Not for Resale

Part 4
SHIELDING AND COVERINGS

SHIELDING (SEE APPENDIX G) ▲

4.1 SHIELDING OF INSULATED CABLE ▲

Shielding of insulated cables shall consist of a conductor stress control layer (see 2.7) and insulation shielding.

4.1.1 Insulation Shield System ▲

The insulation shield system shall consist of a nonmetallic covering directly over the insulation and a nonmagnetic metal component directly over or embedded in the nonmetallic covering. The nonmetallic covering shall comply with 4.1.1.1. The metal component shall comply with 4.1.1.2. The insulation shield system shall be resistant to or protected against chemical action from other cable components.

4.1.1.1 NONMETALLIC COVERING

A conducting nonmetallic covering which meets the requirements of Table 4-1 or Table 4-2 shall be applied over the insulation in one or more layers in direct contact and shall be plainly identified as being conducting. Identification shall be provided for each distinctive layer.

If one of the layers is a coating, it shall be applied directly over the insulation.

The tension necessary to remove an extruded covering from cable at room temperature shall be not less than 3 pounds (13.3N) for cables rated 2001 through 25000 volts and not less than 4 pounds (17.8N) for cables rated 25001 through 28000 volts (see Part 6). ▲

For removability of insulation shields, see Appendix G, par. G6. ▲

This sentence is approved by NEMA as Authorized Engineering Information.

4.1.1.2 METAL COMPONENT

A nonmagnetic metal component consisting of a tape or tapes, wires, straps, or sheaths shall be applied over or embedded in the conducting nonmetallic covering. The metal components shall be electrically continuous throughout each cable length and shall be in contact with the nonmetallic covering. Metal components shall be applied in such a manner that electrical continuity or contiguity will not be distorted or disrupted during normal installation bending (see Appendix H). ▲

Metal tape(s) shall be of copper at least 2.5 mils (0.0635 mm) thick or of other nonmagnetic metal tape(s) having equivalent conductance. Wires, straps, or sheaths shall be of copper and have a total area at any cross section of at least 5000 circular mils per inch (0.1 mm²/mm) of insulated conductor diameter, or of other nonmagnetic metals having equivalent conductance.

Metal tapes, wires, straps, and sheaths may be used in combination providing they are compatible and meet the requirements of the preceding paragraph.

Metal components embedded in a conducting nonmetallic covering shall not be exposed nor become exposed during normal installation bending (see Appendix H). ▲

NOTE—Additional conductance may be required in the metal component depending upon installation and electrical system characteristics, particularly in regard to the functioning of overcurrent protective devices, available fault current and the manner in which the system may be grounded.

This paragraph is approved by NEMA as Authorized Engineering Information.

4.1.2 Multiple-Conductor Cables (See 4.2) ▲

When shielding is required on multiple-conductor cables, the shields shall be applied over the individual conductors.

4.1.3 Conductor Identification (See 5.6) ▲

4.2 SHIELDING LIMITS FOR POWER CABLE FOR FIXED LOCATIONS ▲

4.2.1 Insulation shielding shall be used on power cables for fixed locations when intended for operation above the three-phase (line-to-line) operating voltages given in Table 4-3. To obtain the equivalent three-phase voltage for single-phase or two-phase alternating-current systems or for direct-current systems, multiply the line-to-line voltage by the factors given in Table 4-3. ▲

4.2.2* ● Shielding should be considered where any of the following conditions exists:

1. Connections to aerial lines.
2. Transition from conducting to nonconducting environment.
3. Transition from moist to dry earth.
4. Dry soil, such as in the desert.
5. Damp conduits.

* This section is approved by NEMA as Authorized Engineering Information.

Copyright National Electrical Manufacturers Association
Provided by IHS under license with NEMA
No reproduction or networking permitted without license from IHS.
Not for Resale

● **4.2.3 Single-conductor Series Lighting Cable.** Insulation shielding shall be used on single-conductor series lighting cable when intended for operation above the open-circuit voltages given in Table 4-3.

● **4.2.4 Multiple-conductor Series Lighting Cable.*** Manufacturer's recommendations should be obtained for shielding limits for multiple-conductor series lighting cables.

* This section is approved by NEMA as Authorized Engineering Information.

Table 4-1
Requirements for Nonmetallic Conducting Coverings using Nonembedded Metal Components

	Thermoplastic	Cross-linked
Aging Requirements (see 6.4)		
After air oven test at 100 °C ± 1 °C for 48 hours—elongation at rupture, minimum, percent	100*	...
After air oven test at 121 °C ± 1 °C for 168 hours—elongation at rupture, minimum, percent	...	100*
Brittleness Temperature (see 6.4.15), not warmer than	−10 °C*	−10 °C*
Volume Resistivity, maximum at room temperature and at rated temperature ± 1 °C (see 6.21), ohm-meters	500	500

* For extruded coverings only.

Table 4-2
Requirements for Extruded Nonmetallic Conducting Coverings using Embedded Metal Components

Thickness, Minimum (see 6.4)	
Total	in accordance with 4.13.12▲
Between insulation and metal component	
mils	5
mm	0.127
Physical Requirements (see 6.4)	
Tensile strength, minimum	
psi	1200
MPa	8.27
Elongation at rupture, minimum, percent	100
Aging Requirements (see 6.4)—after air oven test at 121 °C ± 1 °C for 168 hours	
Tensile strength, minimum, percentage of unaged value	85
Elongation at rupture, minimum, percent	100
Brittleness Temperature (see 6.4.15), not warmer than	−10 °C
Volume Resistivity, maximum at room temperature and at rated temperature ± 1 °C (see 6.21), ohm-meters	500

●Editorially renumbered.
▲Editorially revised.

Copyright National Electrical Manufacturers Association
Provided by IHS under license with NEMA
No reproduction or networking permitted without license from IHS

Not for Resale

Table 4-3
Operating Voltage Limits, kV, above which Insulation Shielding is Required
(see 4.1.1 and 4.1.2) (See Part 7 for Exceptions)

a. Power Cable—100 and 133 Percent Insulation Level	
1. Single Conductor (including assemblies of single conductors)	
a. With metallic sheath or armor	5kV
b. All others	2kV
2. Multiple conductor with common covering	
a. With discharge-resisting jacket	5kV
b. With nondischarge-resisting jacket	2kV
c. With fibrous covering	2kV
d. With metallic sheath or armor	5kV

B. Single-conductor Series Lighting Cable	Open-circuit Voltage	
	With Protectors	Without Protectors
1. With discharge-resisting jacket	7kV	5kV
2. With nondischarge-resisting jacket	4kV	3kV
3. With fibrous covering	4kV	3kV
4. With metallic sheath or armor	7kV	5kV

Multiplying Factors for Equivalent Three-phase Voltages
For Single- or Two-phase a-c Systems or for d-c Systems

	Single- and Two-phase a-c Systems* over 5 000 Volts	
Single- and Two-phase a-c Systems* and d-c Systems 5 000 Volts or Less	One Side Grounded	Ungrounded and Midpoint Grounded
1	1.73	0.866

*Where it is not definitely specified that a line operates as an isolated single- or two-phase system, it shall be considered as a branch of a 100 percent insulation level three-phase circuit, and the rating shall be the line-to-line voltage of this 100 percent insulation level three-phase circuit.

Copyright National Electrical Manufacturers Association
Provided by IHS under license with NEMA
No reproduction or networking permitted without license from IHS

Not for Resale

TAPES, BRAIDS, WRAPS AND SERVINGS

4.3 General

In the following sections where requirements are given for a specific kind of covering, such requirements pertain to the quality, design and construction of the particular kind of covering which is described. The use of that particular kind of covering, however, is not required.

4.3.1 Number of Coverings for Single-conductor Wires and Cables. Single-conductor wires and cables, sizes 8 AWG and smaller, rated at 600 volts or less shall have at least one covering. All other single-conductor wires and cables shall have at least two braids, or two servings, a tape and a braid or serving, or a serving and braid.

4.3.2 Covering of Twin Wires and Multiple-conductor Power Cables. A twin wire or a twisted pair wire shall have a covering consisting of either a tape, braid or serving on each individual conductor and, except when covered with an extruded metallic sheath or nonmetallic jacket, shall have in addition a covering enclosing the parallel or twisted conductors.

All other multiple-conductor power cables shall have a covering consisting of either a tape, braid or serving on each individual conductor except when conductor identification is obtained without the use of coverings (see 5.6.1).

If a tape is used to enclose parallel or cabled conductors, the tape shall not be the final covering of the cable.

4.3.3 Identification of Multiple-conductor Control Cable. Where a covering is used on individual conductors of multiple-conductor control cables for circuit identification, the covering shall be in accordance with 4.5.1.1, 4.6, 4.10 and 5.6, as applicable.

4.4 Tapes

Tapes may be used in place of braids or wraps, except that they shall not be used as the final covering of either a single- or multiple-conductor wire or cable.

Tapes used for special purposes such as reinforcing, barriers, etc. and semiconducting tape for strand and external shielding are not covered by this standard, except that semiconducting tapes shall be at least 2.5 mils (0.0635 mm) thick.*

* This paragraph is approved by NEMA as Authorized Engineering Information.

4.4.1 Compound-filled Tape. Compound-filled tape shall be made from cloth treated on one or both sides with an insulating compound. The thickness shall be not less than 10 mils (0.254 mm).

4.4.2 Application. Tape shall be applied helically and overlapped not less than 10 percent of its width. When applied directly over the insulation, it may be applied either before or after vulcanization.

4.5 Cotton Braids. Cotton braids shall be of one of the following three classes:

4.5.1 Classes of Braids

4.5.1.1 Class A braids shall be suitable for use in normal indoor installations. The thickness of Class A cotton braids shall be not less than specified in Table 4-4.

Colored identification braids on the individual conductors of multiple-conductor cable shall be Class A braids if of cotton except that 30/2 or 14/1 cotton may be used where the diameter under the braid is 0.250 inch (6.35 mm) or less. The colors shall be as given in 5.6.

4.5.1.2 Class B braids shall be suitable for use in cases where, for any reason, a closer braid than Class A is desirable. The thickness shall be not less than that specified in Table 4-4.

4.5.1.3 Class C braids shall be suitable for outdoor use and rough service. The thickness shall be not less than that specified in Table 4-4.

4.5.2 Materials. Braids shall consist of cotton thread or yarn. One- or two-ply cotton shall be used in Class A braids and for all marker or identification braids on diameters up to 0.800 inch (20.32 mm) under the braid. On larger diameters cotton of at least two plies shall be used. Cotton of at least two plies shall be used in Class B and C braids.

4.5.3 Angle of Braid. The braid shall be so constructed that the tangent of the angle between the cotton thread and a line in the braid surface parallel to the axis of the core shall be not less than that specified in Table 4-5.

4.5.4 Thickness of Cotton Braid. The thickness of cotton braids shall be not less than that specified in Table 4-4.

Copyright National Electrical Manufacturers Association
Provided by IHS under license with NEMA
No reproduction or networking permitted without license from IHS
Not for Resale

Table 4-4
Thickness of Cotton Braids

Calculated Diameter Under Braid		Minimum Thickness of Braid		Corresponding Minimum Size and Ply of Cotton Yarn
inches	mm	inches	mm	
Class A				
0–0.200	0–5.08	0.015	0.38	30/2 or 14/1
0.201–0.350	5.11–8.89	0.017	0.43	26/2 or 12/1
0.351–0.800	8.92–20.32	0.020	0.51	20/2 or 10/1
0.801–1.500	20.35–38.10	0.026	0.66	12/2
1.501–3.000	38.13–76.20	0.032	0.81	8/2
Class B				
0–0.200	0–5.08	0.016	0.41	30/2
0.201–0.350	5.11–8.89	0.017	0.43	26/2
0.351–0.800	8.92–20.32	0.020	0.51	20/2
0.801–1.500	20.35–38.10	0.026	0.66	12/2
1.501–3.000	38.13–76.20	0.032	0.81	8/2
Class C				
0–0.200	0–5.08	0.020	0.51	20/2
0.201–0.300	5.11–7.62	0.022	0.56	16/2
0.301–0.600	7.65–15.24	0.026	0.66	12/2
0.601–1.000	15.27–25.40	0.032	0.81	8/2
1.001–1.500	25.43–38.10	0.037	0.94	6/2
1.501–2.000	38.13–50.80	0.045	1.14	4/2
2.001–3.000	50.83–76.20	0.056	1.42	4/3

Table 4-5

Calculated Diameter Under Braid		Value of Tangent	Corresponding Braid Angle, Degrees
inches	mm		
0–1.000	0–25.40	0.700	35
1.001–1.500	25.43–38.10	0.839	40
1.501 and over	38.13 and over	1.000	45

Table 4-6
Values of K

	K
2 ply	1.60
3 ply	2.00
4 ply	2.36

Table 4-7
Values of X

Calculated Diameter Under Braid		Class A Braids	Class B and C Braids
inches	mm		
0–0.500	0–12.70	1.7	1.1
0.501 and over	12.73 and over	1.5	1.0

Table 4-8
Values of Z for Standard Braiders

Number of Carriers	Z
12	3.65
16	6.49
20	10.13
24	14.59
36	32.80
48	58.40

4.5.5 Carriers, Ends and Picks

4.5.5.1 *Carriers and Ends.* The number of carriers and the number of ends per carrier used in applying the braid shall be so selected that all requirements of 4.7 are met.

4.5.5.2 *Picks Per Inch.* The number of picks per inch shall in no case be less than the value computed by the following formula:

$$P = \sqrt{\left(\frac{1}{tE + M}\right)^2 - \left(\frac{C}{2\pi(D + T)}\right)^2}$$

where

P—Picks per inch
T—Thickness of braid, in inches = 2t
t—Diameter of one end of cotton, in inches = $\frac{0.0279K}{\sqrt{S}}$
S—Cotton size
E—Number of ends per carrier
C—Number of carriers
D—Diameter under braid, in inches
M—Space between each set of carrier threads, in inches = $X(0.011 + 7.0t^2E^2)$
K—Cabling factor for plied yarn, Table 4-6
X—Closeness constant, Table 4-7

For convenience in computing the more usual braid construction, the formula for picks may be reduced to:

Copyright National Electrical Manufacturers Association
Provided by IHS under license with NEMA
No reproduction or networking permitted without license from IHS
Not for Resale

$$P = \sqrt{Y - \frac{Z}{(D + T)^2}}$$

where

$$Y = \frac{1}{(tE + M)^2}$$

$$Z = 0.0253C^2$$

See Table 4-8, page 5, for values of Z and Table 4-9, page 7, for values of Y.

See the following for picks per inch for typical braids:

Class A braids—Table 10, page 8.
Class B braids—Table 11, page 10.
Class C braids—Table 12, page 12.

Note—To determine D for braids over twin wires, use 1.64 times the diameter of the individual conductor before twinning.

4.5.5.3 *Double Cotton Braids.* Where two braids are specified, the outer braid shall be determined by the diameter over the inner braid. Where two braids are applied in one operation, this standard shall apply to both braids except that the picks per inch and the angle of braid for inner braids shall be governed by the construction of the machine. The size and ply of cotton of the inner braid shall conform to this standard and the number of ends shall be not less than used in the outer braid.

4.5.6 Measurements of Braids. Methods for determining the number of carriers and ends, picks per inch, braid angle and braid thickness are given in 6.11.

4.6 Cotton Wraps or Servings

4.6.1 Materials. A cotton serving or wrap covering on an insulated conductor shall be composed of cotton yarn of a size and ply not less than that indicated in Table 4-13.

4.6.2 Angle of Servings. A cotton serving or wrap covering shall be so constructed that the tangent of the angle between the yarn and the axis of the core is not less than 0.649 (corresponding to an angle of 33 degrees) for conductors having a diameter under the serving of 0.800 inch (20.32 mm) or less.

Table 4-13

Calculated Diameter Under Serving		Minimum Size and Ply of Yarn
inches	mm	
0–0.200	0–5.08	14/1 or 30/2
0.201–0.350	5.11–8.89	12/1 or 26/2
0.351–0.800	8.92–20.32	10/1 or 20/2
0.801–1.500	20.35–38.10	12/2

4.6.3 Double Servings. If two wraps are specified, the angle of the outer serving shall be determined from the diameter over the inner serving.

If a fibrous covering consists of two or more servings, the lay of adjacent servings shall be in opposite directions.

4.6.4 Construction of Servings. The size and number of ends of yarn and the length of lay of a serving shall be such as to give not less than 80 percent coverage of the surface to which applied when computed by the formula:

$$\text{Percentage Coverage} = \frac{ND}{W} \times 100$$

where

N—number of ends of yarn in ribbon
D—constant for the yarn size used (see Table 4-14)
W—P cos A
P—mean circumference of serving in inches (measured) = L tan A
L—length of lay in inches (measured)
A—angle between yarn and axis of the core

Binder threads of a suitable fibrous material shall be applied helically to the outermost serving or wrap and in the opposite direction to the lay of the yarns in that serving. The binder threads shall be uniformly spaced and shall consist of materials of such strength and elasticity and shall be applied in such a manner that the completed wire or cable will withstand the bending test without breaking the binder threads.

The bending test described in 6.15.3 shall be conducted first (with adjacent turns in contact with each other) and the specimens then used for the moisture absorption test described in 6.13.3 with the helix elongated after removal from the mandrel so as to cause adjacent turns to be from 1/8 to 1/4 inch (3.18 to 6.35 mm) apart.

Table 4-14

Size and Ply of Yarn	Values of D
14/1 or 30/2	0.0096
12/1 or 26/2	0.0105
10/1 or 20/2	0.0114
12/2	0.0155

Copyright National Electrical Manufacturers Association
Provided by IHS under license with NEMA
No reproduction or networking permitted without license from IHS

Not for Resale

Copyright National Electrical Manufacturers Association
Provided by IHS under license with NEMA
No reproduction or networking permitted without license from IHS

E-4 Not for Resale

Table 4-9
Values of Y For Some of the Most Commonly Used Constructions

Size and Ply of Yarn	Thickness of Braid (T)		For Diameters 0.500 Inch (12.70 mm) and Under				For Diameters Over 0.500 Inch (12.70 mm)						
	inches	mm	2 End	3 End	4 End	5 End	2 End	3 End	4 End	5 End	6 End	7 End	8 End
CLASS A BRAIDS													
14/1	0.0150	0.381	755	453	...	...	...	...	...	...	...	...	...
12/1	0.0161	0.409	699	406	...	...	...	...	...	...	...	...	...
10/1	0.0176	0.447	625	351	212	136	...	...	...	...	...	...	...
8/1	0.0197	0.500	541	290	170	107	...	...	...	...	...	...	...
30/2	0.0163	0.414	693	397	246	161	...	...	...	...	...	...	...
28/2	0.0168	0.427	662	377	230	149	...	...	...	...	...	...	...
26/2	0.0175	0.444	631	355	215	138	...	...	...	...	...	...	...
24/2	0.0182	0.462	601	333	199	127	...	...	...	...	...	...	...
22/2	0.0190	0.483	568	310	183	115	...	...	...	...	...	...	...
20/2	0.0200	0.508	528	284	166	103	603	318	186	116	77	...	...
18/2	0.0210	0.533	497	260	150	92	563	292	168	103	68	...	...
16/2	0.0223	0.566	452	232	133	81	516	262	149	91	59	...	...
14/2	0.0238	0.605	412	207	115	69	465	232	129	78	50	...	...
12/2	0.0258	0.655	367	176	97	57	411	199	109	65	41	...	...
10/2	0.0282	0.716	316	148	79	46	355	166	88	52	32	...	...
8/2	0.0316	0.803	262	108	60	34	292	130	68	39	24	...	...
16/3	0.0278	0.706	322	152	81	47	362	170	91	53	33	...	...
14/3	0.0298	0.757	288	132	69	40	324	148	78	45	28	...	...
12/3	0.0322	0.818	252	112	57	32	282	126	65	37	22	...	...
10/3	0.0352	0.894	212	91	46	25	238	103	52	29	17	...	...
8/3	0.0394	1.001	171	70	34	18	191	79	39	21	13	...	...
CLASSES B AND C BRAIDS													
30/2	0.0163	0.414	1081	592	358	233	...	...	...	...	...	...	...
26/2	0.0175	0.444	982	526	312	220	...	...	...	...	...	...	...
24/2	0.0182	0.462	930	492	290	185	...	...	...	...	...	...	...
20/2	0.0200	0.508	807	416	241	151	878	446	259	163	...	...	...
16/2	0.0223	0.566	683	339	193	118	738	365	207	127	...	...	...
14/2	0.0238	0.605	616	302	168	103	664	324	180	111	...	...	...
12/2	0.0258	0.655	538	257	142	85	582	276	152	92	59	40	28
10/2	0.0282	0.716	462	214	115	68	497	231	125	74	48	32	22
8/2	0.0316	0.803	379	170	89	52	407	183	96	56	35	23	16

6470247 0004694 3

Copyright National Electrical Manufacturers Association
Provided by IHS under license with NEMA
No reproduction or networking permitted without license from IHS
Not for Resale

WC 3-80
6470247 0004695 5

Table 4-10*
Picks per Inch—Typical Class A Braids

Calculated Diameter Under Braid (D), inches (mm)	Number of Carriers	Size 14 Ply 1 Ends 2	14 1 3	30 2 2	30 2 3	26 2 2	26 2 3	24 2 2	24 2 3	20 2 2	20 2 3	20 2 4	16 2 2	16 2 3	16 2 4	12 2 2	12 2 3	12 2 4	10 2 3	10 2 4	8 2 3	8 2 4
0–0.090	12	20.6	12.7	19.2	11.5	17.8	...	...	...	...	...	...	...	...	...	...	...	...	...	...	...	...
(0–2.29)	16	16.2	...	15.3	...	...	...	...	...	...	...	...	...	...	...	...	...	...	...	...	...	...
0.091–0.110	12	21.8	13.3	20.5	12.6	19.4	...	...	...	...	...	...	...	...	...	...	...	...	...	...	...	...
(2.31–2.79)	16	17.0	...	16.7	...	15.2	...	...	...	...	...	...	...	...	...	...	...	...	...	...	...	...
0.111–0.125	12	23.4	15.7	22.2	13.9	20.8	12.5	...	...	...	...	...	...	...	...	...	...	...	...	...	...	...
(2.82–3.18)	16	19.7	...	18.2	...	16.6	...	...	...	...	...	...	...	...	...	...	...	...	...	...	...	...
0.126–0.150	12	24.4	17.3	23.2	15.6	21.9	14.3	...	...	...	...	...	...	...	...	...	...	...	...	...	...	...
(3.20–3.81)	16	21.9	13.2	20.4	11.5	19.0	11.4	...	...	...	...	...	...	...	...	...	...	...	...	...	...	...
	20	17.9	...	16.3	...	14.6	...	...	...	...	...	...	...	...	...	...	...	...	...	...	...	...
0.151–0.175	16	23.4	15.8	22.2	13.9	20.8	12.5	20.1	11.6	18.5	...	...	...	...	...	...	...	...	...	...	...	...
(3.84–4.44)	20	20.8	12.5	19.4	12.4	17.8	...	17.0	...	15.0	...	...	...	...	...	...	...	...	...	...	...	...
0.176–0.200	16	24.4	17.2	23.2	15.5	21.8	14.1	21.2	13.4	19.5	11.6	...	...	...	...	...	...	...	...	...	...	...
(4.47–5.08)	20	22.5	14.4	21.2	12.4	19.7	...	19.3	...	17.2	...	...	...	...	...	...	...	...	...	...	...	...
	24	20.1	...	18.5	...	16.8	...	16.1	...	13.8	...	...	...	...	...	...	...	...	...	...	...	...
0.201–0.225	16	...	...	...	...	22.5	15.2	21.9	14.5	20.2	12.8	...	...	...	...	...	...	...	...	...	...	...
(5.11–5.72)	20	...	...	...	...	21.0	12.8	20.3	12.0	18.5	9.9	...	...	...	...	...	...	...	...	...	...	...
	24	...	...	...	...	18.9	...	18.1	...	16.1	...	...	...	...	...	...	...	...	...	...	...	...
0.226–0.250	16	...	...	...	...	23.1	16.0	22.4	15.3	20.7	13.7	...	...	...	...	...	...	...	...	...	...	...
(5.74–6.35)	20	...	...	...	...	21.8	14.2	21.2	13.4	19.4	11.5	...	...	...	...	...	...	...	...	...	...	...
	24	...	...	...	...	20.2	11.4	19.4	10.5	17.6	...	...	...	...	...	...	...	...	...	...	...	...
0.251–0.300	16	...	...	...	...	23.6	16.7	23.1	16.0	21.3	14.5	...	19.4	12.6	...	...	...	...	...	...	...	...
(6.38–7.62)	20	...	...	...	...	22.6	15.4	22.0	14.7	20.3	13.0	...	18.4	10.9	...	...	...	...	...	...	...	...
	24	...	...	...	...	21.5	13.6	20.8	12.8	19.0	10.8	...	17.0	...	...	...	...	...	...	...	...	...
0.301–0.350	16	...	...	...	...	24.0	17.3	23.4	16.7	21.7	15.1	...	20.0	13.3	...	...	...	...	...	...	...	...
(7.65–8.89)	20	...	...	...	...	23.4	16.4	22.7	15.7	21.0	14.1	...	19.2	12.2	...	...	...	...	...	...	...	...
	24	...	...	...	...	22.5	15.2	21.9	14.5	20.2	12.7	...	18.2	10.5	...	...	...	...	...	...	...	...

(Continued)

Copyright National Electrical Manufacturers Association
Provided by IHS under license with NEMA
No reproduction or networking permitted without license from IHS

Table 4-10* (Continued)
Picks per Inch—Typical Class A Braids

Calculated Diameter Under Braid (D), inches (mm)	Number of Carriers	Size 14 Ply 1 Ends 2	14 1 3	30 2 2	30 2 3	26 2 2	26 2 3	24 2 2	24 2 3	20 2 2	20 2 3	20 2 4	16 2 2	16 2 3	16 2 4	12 2 2	12 2 3	12 2 4	10 2 3	10 2 4	8 2 3	8 2 4
0.351–0.400	20	...	...	...	...	...	...	...	...	21.5	14.8	...	19.7	12.9	...	17.7	10.6	...	...	...	...	...
(8.92–10.16)	24	...	...	...	...	...	...	...	...	20.8	13.8	...	18.9	11.8	...	16.9	9.3	...	...	...	...	...
0.401–0.450	20	...	...	...	...	...	...	...	...	21.8	15.2	...	20.0	13.5	...	18.1	11.2	...	...	...	...	...
(10.19–11.43)	24	...	...	...	...	...	...	...	...	21.3	14.5	...	19.5	12.6	...	17.4	10.2	...	...	...	...	...
0.451–0.500	20	...	...	...	...	...	...	...	...	22.1	15.6	...	20.3	13.8	...	18.3	11.6	...	...	...	...	...
(11.46–12.70)	24	...	...	...	...	...	...	...	...	21.6	15.0	...	19.8	13.2	...	17.9	10.8	...	...	...	...	...
0.501–0.600	20	...	...	...	...	...	...	...	...	...	16.9	12.4	...	15.2	10.9	...	13.0	8.9	...	...	...	...
(12.73–15.24)	24	...	...	...	...	...	...	...	...	...	16.5	11.9	...	14.7	10.2	...	12.4	8.1	...	...	...	...
0.601–0.800	20	...	...	...	...	...	...	...	...	...	17.3	12.9	...	15.6	11.4	...	13.4	9.5	12.1	8.3	...	...
(15.27–20.32)	24	...	...	...	...	...	...	...	...	...	17.0	12.5	...	15.3	11.0	...	13.1	9.1	11.8	7.8	...	...
0.801–1.000	20	...	...	...	...	...	...	...	...	...	...	...	...	...	...	...	13.7	9.9	12.4	8.7	10.9	7.5
(20.35–25.40)	24	...	...	...	...	...	...	...	...	...	...	...	...	...	...	...	13.5	9.6	12.2	8.4	10.6	7.2
1.001–1.200	24	...	...	...	...	...	...	...	...	...	...	...	...	...	...	...	13.7	9.9	12.5	8.7	10.9	7.6
(25.43–30.48)	36	...	...	...	...	...	...	...	...	...	...	...	...	...	...	...	13.1	9.1	12.0	7.9	10.2	6.8
	48	...	...	...	...	...	...	...	...	...	...	...	...	...	...	...	12.4	7.9	11.0	6.5	9.7	...
1.201–1.500	24	...	...	...	...	...	...	...	...	...	...	...	...	...	...	...	13.8	10.1	12.6	8.9	11.0	7.8
(30.51–38.10)	36	...	...	...	...	...	...	...	...	...	...	...	...	...	...	...	13.5	9.6	12.2	8.5	10.6	7.5
	48	...	...	...	...	...	...	...	...	...	...	...	...	...	...	...	13.0	8.9	11.6	7.5	10.0	6.1
1.501–2.000	24	...	...	...	...	...	...	...	...	...	...	...	...	...	...	...	...	...	...	...	11.2	8.0
(38.13–50.80)	36	...	...	...	...	...	...	...	...	...	...	...	...	...	...	...	...	...	...	...	11.0	7.6
	48	...	...	...	...	...	...	...	...	...	...	...	...	...	...	...	...	...	...	...	10.7	7.1
2.001–3.000	24	...	...	...	...	...	...	...	...	...	...	...	...	...	...	...	...	...	...	...	...	8.1
(50.83–76.2)	36	...	...	...	...	...	...	...	...	...	...	...	...	...	...	...	...	...	...	...	...	8.0
	48	...	...	...	...	...	...	...	...	...	...	...	...	...	...	...	...	...	...	...	...	7.7

Note—In Tables 4-10, 4-11 and 4-12 are tabulated the values of picks per inch as calculated by the formulae in 4.5.5 for braid applied with minimum size and ply of cotton and a definite number of ends per carrier. These are offered as a matter of convenience, and it is not intended to limit the braids furnished under this standard to those listed in the tables since heavier cotton or a variation in ends per carrier are permissible provided all the requirements of 4.5 are fulfilled.
* This table is approved by NEMA as Authorized Engineering Information.

Not for Resale

WC 3-80
6470247 0004696 7

Copyright National Electrical Manufacturers Association
Provided by IHS under license with NEMA
No reproduction or networking permitted without license from IHS

WC 3-80
6470247 0004697 9

Table 4-11*
Picks per Inch—Typical Class B Braids

Calculated Diameter Under Braid (D), inches (mm)	Number of Carriers	Size 30 Ply 2 Ends 2	30 2 3	26 2 2	26 2 3	24 2 2	24 2 3	20 2 2	20 2 3	20 2 4	20 2 5	16 2 2	16 2 3	16 2 4	16 2 5	12 2 2	12 2 3	12 2 4	12 2 5	8 2 3	8 2 4	8 2 5
0–0.090	12	27.7	...	...	...	...	...	...	...	...	...	...	...	...	...	...	...	...	...	...	...	...
(0–2.29)	16	22.6	...	20.6	...	...	...	...	...	...	...	...	...	...	...	...	...	...	...	...	...	...
0.091–0.110	12	28.6	...	...	...	...	...	...	...	...	...	...	...	...	...	...	...	...	...	...	...	...
(2.31–2.79)	16	24.7	...	22.6	...	...	...	...	...	...	...	...	...	...	...	...	...	...	...	...	...	...
0.111–0.125	12	29.8	...	...	...	...	...	...	...	...	...	...	...	...	...	...	...	...	...	...	...	...
(2.82–3.18)	16	27.0	...	25.1	...	...	...	...	...	...	...	...	...	...	...	...	...	...	...	...	...	...
0.126–0.150	12	30.6	...	...	...	...	...	...	...	...	...	...	...	...	...	...	...	...	...	...	...	...
(3.20–3.81)	16	28.6	17.8	26.7	...	...	...	...	...	...	...	...	...	...	...	...	...	...	...	...	...	...
0.151–0.175	16	29.8	19.7	28.0	18.1	27.1	17.2	...	...	...	...	...	...	...	...	...	...	...	...	...	...	...
(3.84–4.44)	24	25.3	12.3	23.1	...	22.0	...	...	...	...	...	...	...	...	...	...	...	...	...	...	...	...
0.176–0.200	16	30.6	20.9	28.7	19.3	27.8	18.4	...	...	...	...	...	...	...	...	...	...	...	...	...	...	...
(4.47–5.08)	24	27.0	15.5	25.2	13.4	24.2	12.2	...	...	...	...	...	...	...	...	...	...	...	...	...	...	...
0.201–0.225	16	...	...	29.3	20.1	28.5	19.3	26.2	17.3	11.0	...	...	...	...	...	...	...	...	...	...	...	...
(5.11–5.72)	24	...	...	26.6	15.8	25.6	14.8	23.2	12.2	...	...	...	...	...	...	...	...	...	...	...	...	...
0.226–0.250	16	...	...	29.7	20.6	28.9	19.8	26.6	17.9	12.0	...	...	...	...	...	...	...	...	...	...	...	...
(5.74–6.35)	24	...	...	27.6	17.4	26.6	16.4	24.2	14.0	...	...	...	...	...	...	...	...	...	...	...	...	...
0.251–0.300	16	...	...	30.2	21.2	29.3	20.2	26.9	18.2	12.9	8.7	...	...	...	...	...	...	...	...	...	...	...
(6.38–7.62)	24	...	...	28.6	18.9	27.6	18.0	25.3	15.8	...	...	...	...	...	...	...	...	...	...	...	...	...
0.301–0.350	16	...	...	30.4	21.7	29.6	20.9	27.2	19.0	13.7	9.8	25.1	16.9	11.8	...	...	...	...	...	...	...	...
(7.65–8.89)	24	...	...	29.4	20.1	28.4	19.2	26.0	17.1	10.9	...	23.7	14.8	8.5	...	...	...	...	...	...	...	...
0.351–0.400	16	...	...	...	...	...	...	27.6	19.4	14.1	...	25.4	17.2	12.3	...	...	...	...	...	...	...	...
(8.92–10.16)	24	...	...	...	...	...	...	26.5	18.0	12.2	...	24.3	15.7	10.0	...	...	...	...	...	...	...	...

(Continued)

Not for Resale

Copyright National Electrical Manufacturers Association
Provided by IHS under license with NEMA
No reproduction or networking permitted without license from IHS

Table 4-11* (Continued)
Picks per Inch—Typical Class B Braids

Calculated Diameter Under Braid (D), inches (mm)	Number of Carriers	Size	30	30	26	26	24	24	20	20	20	20	16	16	16	16	12	12	12	12	8	8	8
		Ply	2	2	2	2	2	2	2	2	2	2	2	2	2	2	2	2	2	2	2	2	2
		Ends	2	3	2	3	2	3	2	3	4	5	2	3	4	5	2	3	4	5	3	4	5
0.401–0.450	16		...	...	...	...	...	...	27.9	19.6	14.4	10.9	25.6	17.5	12.7	...	...	...	...	...	...	...	...
(10.19–11.43)	24		...	...	...	...	...	...	26.9	18.5	12.9	8.8	24.6	16.3	11.0	...	...	...	...	...	...	...	...
0.451–0.500	16		...	...	...	...	...	...	28.1	19.8	14.6	...	25.7	17.7	12.9	...	...	...	...	...	...	...	...
(11.46–12.70)	24		...	...	...	...	...	...	27.2	18.9	13.5	9.5	25.0	16.8	11.6	...	...	...	...	...	...	...	...
0.501–0.600	24		...	...	...	...	...	...	28.8	20.1	14.6	10.9	26.3	17.9	12.7	9.1	...	...	...	...	...	...	...
(12.73–15.24)																							
0.601–0.800	24		...	...	...	...	...	...	29.1	20.5	15.2	11.6	26.6	18.4	13.4	10.0	23.6	15.7	11.2	8.0	...	...	...
(15.27–20.32)	36		...	...	...	...	...	...	28.6	19.6	14.0	10.0	26.0	17.4	12.0	8.0	22.8	14.6	9.5	...	...	...	...
0.801–1.000	24		...	...	...	...	...	...	...	...	...	...	...	...	...	...	23.8	16.2	11.6	8.7	...	...	...
(20.35–25.40)	36		...	...	...	...	...	...	...	...	...	...	...	...	...	...	23.3	15.4	10.7	...	...	...	...
	48		...	...	...	...	...	...	...	...	...	...	...	...	...	...	22.7	14.5	9.2	...	...	...	...
1.001–1.200	24		...	...	...	...	...	...	...	...	...	...	...	...	...	...	23.9	16.3	11.9	9.0	13.1	9.2	6.7
(25.43–30.48)	36		...	...	...	...	...	...	...	...	...	...	...	...	...	...	23.6	15.8	11.2	8.1	12.5	8.4	5.5
	48		...	...	...	...	...	...	...	...	...	...	...	...	...	...	23.1	15.2	10.3	...	12.1	7.1	...
1.201–1.500	24		...	...	...	...	...	...	...	...	...	...	...	...	...	...	24.0	16.4	12.0	9.2	13.2	9.4	6.9
(30.51–38.10)	36		...	...	...	...	...	...	...	...	...	...	...	...	...	...	23.8	16.1	11.6	8.6	12.8	8.9	6.2
	48		...	...	...	...	...	...	...	...	...	...	...	...	...	...	23.5	15.7	11.0	7.8	12.3	8.1	5.0
1.501–2.000	24		...	...	...	...	...	...	...	...	...	...	...	...	...	...	...	...	...	...	13.3	9.5	7.2
(38.13–50.80)	36		...	...	...	...	...	...	...	...	...	...	...	...	...	...	...	...	...	...	13.1	9.2	6.8
	48		...	...	...	...	...	...	...	...	...	...	...	...	...	...	...	...	...	...	12.8	8.8	6.1
2.001–3.000	24		...	...	...	...	...	...	...	...	...	...	...	...	...	...	...	...	...	...	13.4	9.6	7.2
(50.83–76.2)	36		...	...	...	...	...	...	...	...	...	...	...	...	...	...	...	...	...	...	13.3	9.5	7.1
	48		...	...	...	...	...	...	...	...	...	...	...	...	...	...	...	...	...	...	13.2	9.3	6.9

Note—In Tables 4-10, 4-11 and 4-12 are tabulated the values of picks per inch as calculated by the formulae in 4.5.5 for braid applied with minimum size and ply of cotton and a definite number of ends per carrier. These are offered as a matter of convenience, and it is not intended to limit the braids furnished under this standard to those listed in the tables since heavier cotton or a variation in ends per carrier are permissible provided all the requirements of 4.5 are fulfilled.
*This table is approved by NEMA as Authorized Engineering Information.

Not for Resale

Copyright National Electrical Manufacturers Association
Provided by IHS under license with NEMA
No reproduction or networking permitted without license from IHS

WC 3-80 6470247 0004699 2

Table 4-12*
Picks per Inch—Typical Class C Braids

Calculated Diameter Under Braid (D), inches (mm)	Number of Carriers	Size 20 Ply 2 Ends 2	20 2 3	16 2 2	16 2 3	16 2 4	12 2 2	12 2 3	8 2 3	8 2 4	8 2 5	6 2 2	6 2 3	6 2 4	4 2 3	4 2 4	4 2 5	4 3 3	4 3 4
0–0.090	12	22.6	...	...	...	...	...	...	...	...	...	...	...	...	...	...	...	...	...
(0–2.29)	16	16.5	...	...	...	...	...	...	...	...	...	...	...	...	...	...	...	...	...
0.091–0.110	12	23.6	...	...	...	...	...	...	...	...	...	...	...	...	...	...	...	...	...
(2.31–2.79)	16	18.9	...	...	...	...	...	...	...	...	...	...	...	...	...	...	...	...	...
0.111–0.125	12	24.8	...	...	...	...	...	...	...	...	...	...	...	...	...	...	...	...	...
(2.82–3.18)	16	21.5	...	...	...	...	...	...	...	...	...	...	...	...	...	...	...	...	...
0.126–0.150	12	25.7	...	...	...	...	...	...	...	...	...	...	...	...	...	...	...	...	...
(3.20–3.81)	16	23.3	...	...	...	...	...	...	...	...	...	...	...	...	...	...	...	...	...
0.151–0.175	16	24.8	14.9	...	...	...	...	...	...	...	...	...	...	...	...	...	...	...	...
(3.84–4.44)	24	19.2	...	...	...	...	...	...	...	...	...	...	...	...	...	...	...	...	...
0.176–0.200	16	25.5	16.4	...	...	...	...	...	...	...	...	...	...	...	...	...	...	...	...
(4.47–5.08)	24	21.6	...	...	...	...	...	...	...	...	...	...	...	...	...	...	...	...	...
0.201–0.225	16	...	...	23.8	14.9	...	20.6	12.0	...	...	...	...	...	...	...	...	...	...	...
(5.11–5.72)	24	...	...	20.4	...	...	16.7	...	...	...	...	...	...	...	...	...	...	...	...
0.226–0.250	16	...	...	25.8	15.6	9.8	21.0	12.8	...	...	...	...	...	...	...	...	...	...	...
(5.74–6.35)	24	...	...	21.6	11.1	...	18.1	...	...	...	...	...	...	...	...	...	...	...	...
0.251–0.300	16	...	...	...	16.3	10.9	21.6	13.6	...	...	...	...	...	...	...	...	...	...	...
(6.38–7.62)	24	...	...	...	13.2	...	19.4	...	...	...	...	...	...	...	...	...	...	...	...
0.301–0.350	16	...	...	...	...	...	22.0	14.3	...	...	...	...	...	...	...	...	...	...	...
(7.65–8.89)	24	...	...	...	...	...	20.5	11.8	...	...	...	...	...	...	...	...	...	...	...
0.351—0.400	16	...	...	...	...	...	22.3	14.7	...	...	...	...	...	...	...	...	...	...	...
(8.92–10.16)	24	...	...	...	...	...	21.1	12.9	...	...	...	...	...	...	...	...	...	...	...

(Continued)

Not for Resale

Copyright National Electrical Manufacturers Association
Provided by IHS under license with NEMA
No reproduction or networking permitted without license from IHS

6470247 0004700 5

Table 4-12* (Continued)
Picks per Inch—Typical Class C Braids

Calculated Diameter Under Braid (D), inches (mm)	Number of Carriers	Size / Ply / Ends	20 2 2	20 2 3	16 2 2	16 2 3	16 2 4	12 2 2	12 2 3	8 2 3	8 2 4	8 2 5	6 2 2	6 2 3	6 2 4	4 2 3	4 2 4	4 2 5	4 3 3	4 3 4
0.401–0.450	16		...	...	...	...	...	22.5	15.0	...	...	...	...	...	...	...	...	...	...	...
(10.19–11.43)	24		...	...	...	...	...	21.6	13.6	...	...	...	...	...	...	..	...	...	...	...
0.451–0.500	16		...	...	...	...	...	22.7	15.2	...	...	...	...	...	...	...	...	...	...	...
(11.46–12.70)	24		...	...	...	...	...	21.9	14.1	...	...	...	...	...	...	...	...	...	...	...
0.501–0.600	24		...	...	...	...	...	23.2	15.2	11.8	7.3	...	16.4	9.5	5.0	6.6	...	...	...	...
(12.73–15.24)																				
0.601–0.800	24		...	...	...	...	...	...	...	12.5	8.3	5.3	16.8	10.3	6.4	7.6	3.9	...	...	...
(15.27–20.32)	36		...	...	...	...	...	...	...	11.1	5.9	...	15.8	8.5	...	5.0	...	...	...	...
0.801–1.000	24		...	...	...	...	...	...	...	12.9	8.9	6.3	17.2	10.8	7.2	8.3	5.0	...	...	...
(20.35–25.40)	36		...	...	...	...	...	...	...	12.0	7.6	4.3	16.5	9.7	5.5	6.9	...	...	...	...
	48		...	...	...	...	...	...	...	10.8	...	...	15.6	8.1	...	4.4	...	...	...	...
1.001–1.200	24		...	...	...	...	...	...	...	...	...	...	17.3	11.0	7.5	8.7	5.7	...	...	...
(25.43–30.48)	36		...	...	...	...	...	...	...	...	...	...	17.0	10.3	6.5	8.0	4.6	...	...	...
	48		...	...	...	...	...	...	...	...	...	...	16.4	9.3	...	7.0	...	...	...	...
1.201–1.500	24		...	...	...	...	...	...	...	...	...	...	17.4	11.2	7.8	8.8	5.8	...	...	...
(30.51–38.10)	36		...	...	...	...	...	...	...	...	...	...	17.2	10.8	7.1	8.2	5.0	...	...	...
	48		...	...	...	...	...	...	...	...	...	...	16.8	10.2	6.1	7.4	...	...	...	...
1.501–2.000	24		...	...	...	...	...	...	...	...	...	...	...	...	...	9.0	6.1	4.3	6.6	4.3
(38.13–50.80)	36		...	...	...	...	...	...	...	...	...	...	...	...	...	8.6	5.6	3.6	6.3	3.6
	48		...	...	...	...	...	...	...	...	...	...	...	...	...	8.1	4.8	...	5.5	...
2.001–3.000	24		...	...	...	...	...	...	...	...	...	...	...	...	...	...	...	...	6.8	4.5
(50.83–76.2)	36		...	...	...	...	...	...	...	...	...	...	...	...	...	...	...	...	6.6	4.2
	48		...	...	...	...	...	...	...	...	...	...	...	...	...	...	...	...	6.3	3.7

Note—In Tables 4-10, 4-11, and 4-12 are tabulated the values of picks per inch, as calculated by the formulae in 4.5.5 for braid applied with minimum size and ply of cotton and a definite number of ends per carrier. These are offered as a matter of convenience, and it is not intended to limit the braids furnished under this standard to those listed in the tables since heavier cotton or a variation in ends per carrier are permissible provided all the requirements of 4.5 are fulfilled.
* This table is approved by NEMA as Authorized Engineering Information.

Not for Resale

4.7 Saturants and Finishes. Three types of finishes may be used on the fibrous coverings.

4.7.1 For wires and cables not exposed to the weather (such as indoor or conduit installations) (see 4.8).

4.7.2 For wires and cables exposed to the weather (such as outdoor and aerial installations) (see 4.9).

4.7.3 For identification coverings in multiple-conductor assemblies (see 4.10).

4.8 Indoor and Conduit Installations. Fibrous coverings on wires and cables for use indoors and in conduits shall be thoroughly saturated and finished with moisture-resisting compounds. Fibrous coverings on single conductors rated 600 volts only shall be thoroughly saturated and finished with flame-retarding and moisture-resisting compounds.

4.8.1 Flame-retarding Requirements. The flame-retarding properties of fibrous coverings, other than tapes, on single-conductor 600-volt wires not smaller than No. 14 AWG shall be such that the flaming section of a specimen subjected to the horizontal flame test described in 6.13.2 shall not extend in either direction for a distance greater than 2 inches (50.8 mm) from the center point of the application of the test flame after the flame has been applied for a period of 30 seconds.

4.8.2 Moisture-resisting Requirements. The moisture-resisting properties of fibrous coverings on single-conductor wires and cables shall be such that the saturated and finished covering will not absorb more than 20 percent of its weight of moisture when tested in accordance with 6.13.3 for a period of 24 hours.

4.8.3 Bending Requirements. The bending properties of the finished fibrous coverings shall be such that when a test specimen is bent around a mandrel in accordance with 6.13.3, no threads shall be broken. The finishing material shall not flake off without actual rubbing of the surface. Cracking of the finish shall not constitute failure.

4.8.4 Methods of Test. See 6.13 for methods of sampling and testing.

4.9 Aerial and Outdoor Installations

4.9.1 Saturant. The saturant used in fibrous coverings shall be an asphaltic base material, or an asphaltic base material blended with suitable high-melting-point waxes, but in neither case shall any volatile materials, such as paraffin, scale wax, wax tailings or flux oils, be added.

The physical characteristics of the saturant, before being placed in the saturating tank, shall conform to the following requirements:

(*a*) Ring-and-ball softening point, ASTM E 28, minimum degrees F.	145
(*b*) Penetration, ASTM D 5, 77°F, 100 grams, 5 seconds, tenths of a millimeter	20 to 35
(*c*) Loss on heating, ASTM D 6, 50-gram sample heated at 325°F for 5 hours, maximum loss in weight, percent	0.3
(*d*) Changes after loss on heating test (crust formed on sample during heating test removed):	
Softening point, maximum rise, degrees F	10
Penetration	
Maximum change, tenths of a millimeter	10
Minimum penetration, tenths of a millimeter	15

Note—The determination of the softening point after the loss on heating test shall be made in water if the test before before heating was made in water, or in glycerin if the test before heating was made in glycerin.

Saturation of the fibrous covering shall be so thorough that no white or unsaturated ends of fibre will be exposed by a diagonal cut through the covering.

4.9.2 Finish. The saturated fibrous covering shall be finished with a dark-colored flexible coating material, such as stearine pitch or high-softening-point asphalt, and coated with mica flake or other suitable nonconducting material to provide a smooth surface free of tackiness and meeting the bending, melting and dripping requirements described in 4.9.4, 4.9.5 and 4.9.6. Excess mica shall be avoided.

Copyright National Electrical Manufacturers Association
Provided by IHS under license with NEMA
No reproduction or networking permitted without license from IHS
Not for Resale

4.9.3 Mineral Filler. The outer fibrous covering of finished wires or cables, together with the compounds in and over this covering, shall contain not less than 5 percent nor more than 20 percent by weight, of well dispersed, nonmetallic commercial 90 percent 325 mesh, slate dust, or other finely divided dry mineral filler. If the cable construction involves two or more overall fibrous coverings, the inner covering may contain the mineral filler specified above, but in no case shall the complete covering exceed a mineral filler content of 15 percent by weight. The mineral filler content shall be determined in accordance with 6.15.2.

4.9.4 Bending Requirements. After the bending test described in 6.15.3, the yarn in the fibrous coverings shall not break under test nor shall the finishing material flake off without actual rubbing of the surface. Cracking of the finish shall not constitute failure.

4.9.5 Melting Requirement. After the melting test described in 6.15.4, the paper shall not adhere to the compound so as to prevent its removal intact, nor shall the compound have become sufficiently fluid to be transferred to the paper in sufficient quantity to form upon it a ridge perceptible to the finger. Discoloration of the paper by oily material absorbed from the compound shall not be considered as constituting failure to meet these requirements.

4.9.6 Dripping Requirement. After the dripping test described in 6.15.5, the compound shall not have dripped, formed globules on the lower side of the sample or formed bubbles upon its surface.

4.10 Finish of Identification Coverings for Individual Conductors of Multiple-conductor Cables. Where colored yarns are used as a means of circuit identification in the coverings of individual conductors of multiple-conductor cables, such coverings may be either dry or treated. If treated, the material used shall not obscure the identifying colors.

JACKETS ▲

4.11 General. Jackets shall be of one of the types covered in 4.12 or 4.13 except that, for cable with an embedded metal component, the jacket shall be a nonmetallic conducting covering meeting the requirements of Table 4-2. For jackets over metallic coverings, see 4.14. ▲

4.12 Composite Jackets. These jackets shall consist of fibrous or composition tapes, compounded jackets, mineral or vegetable fiber braids or servings and/or combinations of these. The total thickness of the jacket shall be not less than the following:

Single-conductor cable—155 mils (3.94 mm)
Multiple-conductor cable—190 mils (4.83 mm)

4.12.1 The completed cable shall meet the following requirements:

4.12.1.1 *Bending Requirement.* During the bending test described in 6.16.2, the jacket shall not break nor shall the saturating and finishing material flake off. Cracking of the finish or dusting of the mica flake shall not constitute failure.

4.12.1.2 *Moisture-absorption Requirement.* The weight of the jacket, that is, the weight of the completed cable minus the weight of the insulated conductors and fillers, when tested in accordance with 6.16.3, shall show not more than a 5 percent increase in weight after the surface moisture has been removed by a light application of blotting paper.

4.13 Rubber or Thermoplastic Jackets. These jackets consist of a durable moisture-resisting thermosetting natural- or synthetic-rubber compound or thermoplastic compound for use as the covering or jacket on insulated wires or cables. They shall meet the applicable requirements of 4.13.1 through 4.13.15. The tests shall be made only on jackets having a nominal wall thickness of 30 mils (0.76 mm) or greater. ▲

4.13.1 Natural Rubber. This jacket shall consist of a cross-linked rubber compound containing not less than 60 percent of natural rubber. When tested in accordance with 6.4, the jacket shall meet the following requirements:

Physical requirements	
Tensile strength, minimum	
psi	3500
▲ MPa	24.1
Tensile stress at 200 percent elongation, minimum	
psi	500
▲ Mpa	3.45
Elongation at rupture, minimum, percent	500
Set, maximum, percent	15
Aging requirements	
After oxygen pressure test at 70°C ± 1°C for 96 hours	
Tensile strength, minimum	
psi	2500
▲ MPa	17.2
Elongation at rupture, minimum, percent	400
Tear resistance, minimum	
pounds per inch	40
▲ KN/m	7.01

Copyright National Electrical Manufacturers Association
Provided by IHS under license with NEMA
No reproduction or networking permitted without license from IHS
Not for Resale

4.13.2 Synthetic Rubber. This jacket shall consist of a cross-linked SBR synthetic rubber compound. When tested in accordance with 6.4, the jacket shall meet the following requirements:

Physical requirements	
Tensile strength, minimum	
psi	1800
▲ MPa	12.4
Elongation at rupture, minimum, percent	300
Set, maximum, percent	20
Aging requirements	
After air oven test at 70°C ± 1°C for 168 hours	
Tensile strength, minimum	
psi	1600
▲ MPa	11.0
Elongation at rupture, minimum, percent	250
After oxygen pressure test at 70°C ± 1°C for 96 hours	
Tensile strength, minimum	
psi	1600
▲ MPa	11.0
Elongation at rupture, minimum, percent	250

4.13.3 Neoprene, Heavy-duty Black. This jacket shall consist of a cross-linked black neoprene compound. When tested in accordance with 6.4, the jacket shall meet the following requirements and, when applicable, the requirements given in 4.13.14:

Physical requirements	
Tensile strength, minimum	
psi	1800
▲ MPa	12.4
Tensile stress at 200 percent elongation, minimum	
psi	500
▲ MPa	3.45
Elongation at rupture, minimum, percent	300
Set, maximum, percent	20
Aging requirements	
After air oven test at 100°C ± 1°C for 168 hours—tensile strength and elongation at rupture, minimum, percentage of unaged value	50
After oil immersion test at 121°C ± 1°C for 18 hours—tensile strength and elongation, minimum, percentage of unaged value	60

4.13.4 Neoprene, General Purpose. This jacket shall consist of a cross-linked neoprene compound. When tested in accordance with 6.4, the jacket shall meet the following requirements and, when applicable, the requirements given in 4.13.14:

Physical requirements	
Tensile strength, minimum	
psi	1500
▲ MPa	10.3
Elongation at rupture, minimum, percent	250
Set, maximum, percent	20
Aging requirements	
After air oven test at 100°C ± 1°C for 168 hours—tensile strength and elongation at rupture, minimum, percentage of unaged value	50
After oil immersion test at 121°C ± 1°C for 18 hours—tensile strength and elongation, minimum, percentage of unaged value	60

4.13.5 Polyvinyl Chloride. This jacket shall consist of a polyvinyl chloride compound suitable for a minimum installing temperature of −10° C (+14° F). When tested in accordance with 6.4 and 6.19, the jacket shall meet the following requirements and, when applicable, the requirements given in 4.13.14:

Physical requirements	
Tensile strength, minimum	
psi	1500
▲ MPa	10.3
Elongation at rupture, minimum, percent	100
Aging requirements	
After air oven test at 100°C ± 1°C for 5 days	
Tensile strength, minimum, percentage of unaged value	85
Elongation at rupture, minimum, percentage of unaged value	60
After oil immersion test at 70°C ± 1°C for 4 hours	
Tensile strength, minimum, percentage of unaged value	80
Elongation at rupture, minimum, percentage of unaged value	60
Heat distortion, 121°C ± 1°C, maximum, percent	50
Heat shock, 121°C ± 1°C	No cracks
Cold bend, minus 35 ± 1°C	No cracks

4.13.6 Polyethylene, Black. This jacket shall consist of a black polyethylene compound suitable for exposure to sunlight and other atmospheric environments at temperatures between −55°C (−67°F) through +75°C (+167°F) and a minimum installing temperature of −40°C (−40°F). When tested in accordance with 6.4 [except that the gauge marks shall be 1 inch (25.4 mm) apart and the distance between jaws 2.5 inches (63.5 mm)] and 6.19, the jacket shall meet the following requirements and, when applicable, the requirements given in 4.13.14:

Physical requirements	
Tensile strength, minimum	
psi	1400
▲ MPa	9.65
Elongation at rupture, minimum, percent	350
Aging requirements	
After air oven test at 100°C ± 1°C for 48 hours—tensile strength and elongation at rupture, minimum, percentage of unaged value	75
Heat distortion, 90°C ± 1°C, maximum, percent	25
Absorption coefficient, minimum	
milli(absorbance/meter)	320*
Environmental cracking	No cracks

*In lieu of testing finished cable jackets, a certification by the manufacturer of the polyethylene compound that this requirement has been complied with shall suffice.

▲ Editorially revised.

Copyright National Electrical Manufacturers Association
Provided by IHS under license with NEMA
No reproduction or networking permitted without license from IHS

Not for Resale

● **4.13.7 Chlorinated Polyethylene, Thermoplastic.** This jacket shall consist of a thermoplastic chlorinated polyethylene compound. When tested in accordance with 6.4 and 6.19, the jacket shall meet the following requirements and, when applicable, the requirements in 4.13.14:

Physical requirements	
Tensile strength, minimum	
psi	1400
▲MPa	9.65
Tensile stress at 100 percent elongation, minimum	
psi	1000
▲MPa	6.89
Elongation at rupture, minimum, percent	150
Aging requirements	
After air oven test at 121 °C ± 1 °C for 168 hours	
Tensile strength, minimum, percentage of unaged value	85
Elongation at rupture, minimum, percentage of unaged value	50
After oil immersion test at 100 °C ± 1 °C for 18 hours	
Tensile strength and elongation at rupture, minimum, percentage of unaged value	60
Heat distortion, 121 °C ± 1 °C, maxomum, percent	25
Cold bend, minus 35 ± 1 °C	No cracks

4.13.8 Nitrile-butadiene/Polyvinyl-chloride, Heavy Duty. This jacket shall consist of a cross-linked acrylonitrile-butadiene/polyvinyl-chloride compound suitable for a minimum installing temperature of −25°C (−13°F). It shall be based on a fluxed blend of acrylonitrile-butadiene synthetic rubber and polyvinyl-chloride resin. When tested in accordance with 6.4, the jacket shall meet the following requirements and, when applicable, the requirements given in 4.13.14:

Physical requirements	
Tensile strength, minimum	
psi	1800
▲MPa	12.4
Tensile stress at 200 percent elongation, minimum	
psi	500
▲MPa	3.45
Elongation at rupture, minimum, percent	300
Set, maximum, percent	30
Aging requirements	
After air oven test at 100°C ± 1°C for 168 hours-tensile strength and elongation at rupture, minimum, percentage of unaged value	50
After oil immersion test at 121°C ± 1°C for 18 hours-tensile strength and elongation, minimum, percentage of unaged value	60

4.13.9 Nitrile-butadiene/Polyvinyl-chloride, General-purpose Duty. This jacket shall consist of a cross-linked acrylonitrile-butadiene/polyvinyl-chloride compound suitable for a minimum installing temperature of −25°C (−13°F). It shall be based on a fluxed blend of acrylonitrile-butadiene synthetic rubber and polyvinyl-chloride resin. When tested in accordance with 6.4, the jacket shall meet the following requirements and, when applicable, the requirements given in 4.13.14:

Physical requirements	
Tensile strength, minimum	
psi	1500
▲MPa	10.3
Elongation at rupture, minimum, percent	250
Set, maximum, percent	30
Aging requirements	
After air oven test at 100°C ± 1°C for 168 hours—tensile strength and elongation at rupture, minimum, percentage of unaged value	50
After oil immersion test at 121°C ± 1°C for 18 hours—tensile strength and elongation, minimum, percentage of unaged value	60

4.13.10 Chlorosulfonated Polyethylene, Heavy Duty. This jacket shall consist of a cross-linked chlorosulfonated-polyethylene compound. When tested in accordance with 6.4, the jacket shall meet the following requirements and, when applicable, the requirements given in 4.13.14:

Physical requirements	
Tensile strength, minimum	
psi	1800
▲MPa	12.4
Tensile stress at 200 percent elongation, minimum	
psi	500
▲MPa	3.45
Elongation at rupture, minimum, percent	300
Set, maximum, percent	30
Aging requirements	
After air oven test at 100°C ± 1°C for 168 hours	
Tensile strength, minimum, percentage of unaged value	85
Elongation at rupture, minimum, percentage of unaged value	65
After oil immersion test at 121°C ± 1°C for 18 hours	
Tensile strength and elongation at rupture, minimum, percentage of unaged value	60

● **4.13.11 Chlorinated Polyethylene, Heavy Duty, Cross-Linked.** This jacket shall consist of a cross-linked chlorinated polyethylene compound. When tested in accordance with 6.4, the jacket shall meet the following requirements and, when applicable, the requirements in 4.13.14:

Physical requirements	
Tensile strength, minimum	
psi	1800
MPa	12.4
Tensile stress at 200 percent elongation, minimum	
psi	500
MPa	3.45
Elongation at rupture, minimum, percent	300
Set, maximum, percent	30
Aging requirements	
After air oven test at 100°C ± 1°C for 168 hours	
Tensile strength, minimum, percentage of unaged value	85
Elongation at rupture, minimum, percentage of unaged value	65
After oil immersion test at 121°C ± 1°C for 18 hours	
Tensile strength and elongation at rupture, minimum, percentage of unaged value	60

Copyright National Electrical Manufacturers Association
Provided by IHS under license with NEMA
No reproduction or networking permitted without license from IHS 83.
Not for Resale

4.13.12 Jacket Thicknesses. The average thicknesses of jackets shall be not less than those given in Tables 4-15, 4-16, 4-17, 4-18, or 4-19. For the jacket thicknesses of cables not shown in these tables, see Table 4-20. The minimum thickness shall be not less than 80 percent of the values given in these tables. The tables do not apply to communication and portable cables and portable cords. (See 6.4.3 for method of measurement.)

4.13.13 Separator Under Jacket. If used, a separator shall consist of compatible material.

4.13.14 Discharge-resisting Jackets

● **4.13.14.1** The jackets described in 4.13.3 through 4.13.11, when used on single-conductor nonshielded cables rated 2001 through 5000 volts phase to phase (see Table 4-3), shall meet the following additional requirements when samples are selected in accordance with 6.8.1 and tested in accordance with 6.20.1 and 6.20.2.

4.13.14.2 *Specific Surface Resistivity.* The specific surface resistivity shall be not less than 200,000 megohms.

4.13.14.3 *U-Bend Discharge.* There shall be no cable failures or cracks in the jacket.

4.13.15 Irregularity Inspection of Jackets Over Metallic Shielded Power Cable. Jackets shall not have irregularities as determined by the procedure of paragraph 3.8 of ICEA T-27-581. The methods to be used for the jackets specified in paragraphs 4.13.1 through 4.13.11 inclusive are:

Method A	Method B	Method C
Neoprene (4.13.3)	Natural Rubber (4.13.1)	Polyvinyl Chloride (4.13.5)
Neoprene (4.13.4)	SBR (4.13.2)	Polyethylene (4.13.6)
		Chlorinated Polyethylene Thermoset (4.13.11)
	Chlorinated Polyethylene Thermoplastic (4.13.7)	
	Nitrile-butadiene/ Polyvinyl Chloride (4.13.8)	
	Nitrile-butadiene/ Polyvinyl Chloride (4.13.9)	
	*Chlorosulfonated Polyethylene (4.13.10)	

*Also known as Chlorosulfonyl Polyethylene

Table 4-15
Single-conductor Nonshielded Cable, 0–5000 Volts†
(For All Uses: Conduit, Trays, Troughs, Underground Duct, Aerial, and Direct Burial‡)

	Jacket Thickness▲							
	0–600 Volts		601–1000 Volts		1001–2000 Volts		2001–5000 Volts‡	
Size, AWG or kcmil▲	mils	mm	mils	mm	mils	mm	mils	mm
14	15	0.38	15	0.38	15	0.38	...	...
12	15	0.38	15	0.38	15	0.38	...	...
10	15	0.38	15	0.38	30	0.76	...	...
9	15	0.38	15	0.38	30	0.76	...	...
8	30	0.76	30	0.76	30	0.76	45	1.14
6	30	0.76	30	0.76	30	0.76	45	1.14
4	30	0.76	30	0.76	30	0.76	45	1.14
2	30	0.76	45	1.14	45	1.14	45	1.14
1	45	1.14	45	1.14	45	1.14	45	1.14
1/0	45	1.14	45	1.14	45	1.14	65	1.65
2/0	45	1.14	45	1.14	45	1.14	65	1.65
3/0	45	1.14	45	1.14	45	1.14	65	1.65
4/0	45	1.14	65	1.65	65	1.65	65	1.65
250	65	1.65	65	1.65	65	1.65	65	1.65
300	65	1.65	65	1.65	65	1.65	65	1.65
350	65	1.65	65	1.65	65	1.65	65	1.65
400	65	1.65	65	1.65	65	1.65	65	1.65
450	65	1.65	65	1.65	65	1.65	65	1.65
500	65	1.65	65	1.65	65	1.65	65	1.65
600	65	1.65	65	1.65	65	1.65	65	1.65
750	65	1.65	65	1.65	65	1.65	65	1.65
1000	65	1.65	65	1.65	65	1.65	95	2.41
1250	95	2.41	95	2.41	95	2.41	95	2.41
1500	95	2.41	95	2.41	95	2.41	95	2.41
1750	95	2.41	95	2.41	95	2.41	95	2.41
2000	95	2.41	95	2.41	95	2.41	95	2.41

† See 4.1 and 4.2 for shielding requirements.
‡ Single-conductor cables in sizes 9 AWG and smaller shall not be used for direct earth burial.

Copyright National Electrical Manufacturers Association
Provided by IHS under license with NEMA 9-15-1983.
No reproduction or networking permitted without license from IHS Not for Resale

Table 4-16
Single-Conductor Metallic Shielded Cable (For All Uses: Conduit, Trays, Troughs, Underground Duct, Aerial and Direct Burial)

Size, AWG or kcmil ▲	Jacket Thickness ▲									
	2001–5000 Volts*, 100 and 133 Percent Insulation Levels		5001–8000 Volts				8001–15000 Volts			
			100 Percent Insulation Level		133 Percent Insulation Level		100 Percent Insulation Level		133 Percent Insulation Level	
	mils	mm	mils	mm	mils	mm	mils	mm	mils	mm
8	60	1.52	...	...	...	...	...	...	...	...
6	60	1.52	60	1.52	80	2.03	...	...	...	...
4	60	1.52	80	2.03	80	2.03	...	...	...	...
2	80	2.03	80	2.03	80	2.03	80	2.03	...	...
1	80	2.03	80	2.03	80	2.03	80	2.03	80	2.03
1/0	80	2.03	80	2.03	80	2.03	80	2.03	80	2.03
2/0	80	2.03	80	2.03	80	2.03	80	2.03	80	2.03
3/0	80	2.03	80	2.03	80	2.03	80	2.03	80	2.03
4/0	80	2.03	80	2.03	80	2.03	80	2.03	80	2.03
250	80	2.03	80	2.03	80	2.03	80	2.03	110	2.79
300	80	2.03	80	2.03	80	2.03	80	2.03	110	2.79
350	80	2.03	80	2.03	80	2.03	80	2.03	110	2.79
400	80	2.03	80	2.03	80	2.03	80	2.03	110	2.79
450	80	2.03	80	2.03	80	2.03	80	2.03	110	2.79
500	80	2.03	80	2.03	80	2.03	110	2.79	110	2.79
600	80	2.03	80	2.03	110	2.79	110	2.79	110	2.79
750	80	2.03	80	2.03	110	2.79	110	2.79	110	2.79
1000	110	2.79	110	2.79	110	2.79	110	2.79	110	2.79

* See 4.1 and 4.2 for shielding requirements.
For all other sizes and voltages not tabulated above, see Table 4-20, Column 2.

Table 4-17
Individual Conductors of Multiple-conductor Cables Under a Common Jacket ▲

Calculated Diameter of Individual Conductor Under Jacket		Jacket Thickness	
inches	mm	mils*	mm
0.250 or less	6.35 or less	15	0.38
0.251–0.425	6.38–10.80	25	0.64
0.426–0.700	10.82–17.78	30	0.76
0.701–1.500	17.81–38.10	50	1.27
1.501–2.500	38.13–63.50	80	2.03

* These thicknesses apply to jackets only and do not apply to colored coatings on the individual conductors of multiple-conductor cables.

Table 4-18
Common Overall Jacket of Multiple-conductor Cable (For All Voltages and All Uses)

Calculated Diameter of Cable Under Jacket		Jacket Thickness ▲	
inches	mm	mils	mm
0.425 or less	10.80 or less	45	1.14
0.426–0.700	10.82–17.78	60	1.52
0.701–1.500	17.81–38.10	80	2.03
1.501–2.500	38.13–63.50	110	2.79
2.501 and larger	63.53 and larger	140	3.56

Note 1—Table 4-18 applies to all round multiple-conductor cables having a common overall jacket and to flat twin cables except those given in Table 4-19.

Note 2—For flat twin cable, use the calculated major core diameter under the jacket to determine the jacket thickness.

Table 4-19
Common Overall Jacket of Flat Twin Cable, 0–600 Volts (For All Uses)

Conductor Size, AWG	Jacket Thickness ▲	
	mils	mm
14–12	45	1.14
10–6	60	1.52
4–4/0	80	2.03

Copyright National Electrical Manufacturers Association
Provided by IHS under license with NEMA
No reproduction or networking permitted without license from IHS

Newly revised.

Not for Resale

Table 4-20
Single- and Multiple-conductor Wire and Cable—All Uses Except Communication and Portable Cables and Portable Cords‡

Calculated Diameter of Cable Under Jacket		Jacket Thickness							
		Single-conductor Cable				Multiple-conductor Cables*			
		Non-shielded (1)		Shielded (2)**		Individual Conductors (3)†		Overall (4)	
inches	mm	mils	mm	mils	mm	mils	mm	mils	mm
0.250 or less	6.35 or less	15	0.38	45	1.14	15	0.38	45	1.14
0.251–0.425	6.38–10.80	30	0.76	45	1.14	25	0.64	45	1.14
0.426–0.700	10.82–17.78	45	1.14	60	1.52	30	0.76	60	1.52
0.701–1.500	17.81–38.10	65	1.65	80	2.03	50	1.27	80	2.03
1.501–2.500	38.13–63.50	95	2.41	110	2.79	80	2.03	110	2.79
2.501 and larger	63.53 and larger	125	3.18	140	3.56	...	...	140	3.56

* Under common jacket.
† These thicknesses apply to jackets only and do not apply to colored coatings used for the purpose of circuit identification on the individual conductors of multiple-conductor cables.
‡ Single-conductor cables in sizes 9 AWG and smaller shall not be used for direct earth burial.
** In calculating the diameter under the jacket of single-conductor shielded cables, 105 mils (2.67 mm) (which was used in calculating the values given in Table 4-16) shall be added to the metallic conductor diameter plus twice the insulation thickness given in Table 3-2.
Note: For flat twin cable use the calculated major core diameter under the jacket to determine the jacket thickness from Column 4.

Copyright National Electrical Manufacturers Association
Provided by IHS under license with NEMA
No reproduction or networking permitted without license from IHS

Not for Resale

4.14 METALLIC AND ASSOCIATED COVERINGS

4.14.1 Scope

This section covers the following:

Division I—(See 4.14.3 through 4.14.16.) Materials, constructions, and requirements for metallic and associated coverings recommended for use under normal conditions of installation, operation, and maintenance of power, control, and lighting circuit wires and cables. It also covers submarine cables.

Division II—(See 4.14.17 through 4.14.23.) Round wire armor for borehold, dredge, shaft, and vertical riser cable.

Division III—(See 4.14.24 through 4.14.26.) Round wire armor for buried cable.

In classifying jackets and sheaths in these standards, the term "jacket" refers to nonmetallic coverings and "sheath" to continuous metallic coverings.

The requirements of Division I as pertaining to quality of materials, design, and construction apply also to Divisions II and III, except as to particular details expressly set forth in the following sections or as otherwise modified.

4.14.2 General

4.14.2.1 Unusual Conditions

The standards given in this section apply under usual installation, operating, and service conditions. Where unusual installation, operating, or service conditions exist, modifications may be necessary and these conditions should be defined before cable design is completed.

4.14.2.2 Types of Metallic Coverings

The types and conditions of installation are as follows:

1. Metallic sheath, lead or aluminum.
   a. Conduit, ducts, troughs, or raceways.
   b. Suspended from aerial messenger.
   c. When protected by metal armor or nonmetallic coverings for other types of installation.
2. Flat metal tape armor.
   a. Direct burial in trenches.
   b. Suspended from aerial messenger.

   Plain- or galvanized-steel tape armor, depending upon soil and water conditions, with an outer fibrous covering is for use on cables for direct burial and for shaft installations where the cable can be clamped at intervals.

   Galvanized-steel tape armor without an outer fibrous covering is for use on cables to be suspended from an aerial messenger strand.
3. Interlocked metal tape armor .
   a. Direct burial in trenches.
   b. Troughs.
   c. Racks.
   d. Raceways.
   e. Suspended from aerial messenger.

   Interlocked-metal tape armor without an outer covering but with either a fibrous bedding or thermoplastic jacket under the armor is for cables for indoor use and for outdoor aerial service.

   Interlocked-metal tape armor with either a fibrous bedding or a thermoplastic jacket under the armor and either a fibrous covering or a thermoplastic jacket over the armor is for underground installations.
4. Galvanized steel wire armor.
   a. Submarine cable.
   b. Dredge cable.
   c. Vertical riser, borehole, and shaft cable for end suspension.
   d. Direct burial in trenches and subjected to unusual longitudinal stress.

   Jute covering is not required on dredge and vertical riser cable. It is required on submarine, borehole, and shaft cable where severe installation and service conditions exist. It is required for direct burial cable.

   Jute covering may be desirable where the conditions of transportation require protection for the galvanizing on the armor wires.†

DIVISION I

Metallic and Associated Coverings for Insulated Cables

4.14.3 Scope

Division I applies to the metallic coverings described in the following sections, together with

† This paragraph has been approved by NEMA as Authorized Engineering Information.

Copyright National Electrical Manufacturers Association
Provided by IHS under license with NEMA
No reproduction or networking permitted without license from IHS
Not for Resale

the necessary fibrous, thermosetting or thermoplastic beddings and protective coverings; to nonmetallic coverings over metallic sheath; and to their application over insulated electric cable for use on power, control and lighting circuits.

4.14.4 Metallic Sheath

A lead or smooth aluminum sheath shall be used with or without supplementary protection when an impervious covering is required.

4.14.4.1 TYPE OF LEAD

A sheath of commercially pure lead (or an alloyed lead) shall be tightly formed around the core of the cable. This lead shall meet the requirements of ASTM B29.

If lead stripped from new cable is used, it shall comply with the requirements given herein.

4.14.4.2 THICKNESS OF LEAD

The average thickness of the lead sheath shall be in accordance with Table 4-21. The minimum thickness shall in no case be less than 90 percent of the thickness specified in the table. Where protective jackets are used over the lead sheath, see 4.14.14 for the thickness of the lead sheath.

There are special cases where the above thicknesses may require an increase, especially on the smaller sizes of cable, if several cables are to be pulled in together in one duct; if the sections are extra long; or if the handling is severe or awkward during installation as in some transformer vaults. **

4.14.4.3 MEASUREMENT OF THICKNESS OF LEAD

The thickness shall be measured in accordance with 6.17.

▲ Editorially revised.

**This sentence is approved by NEMA as Authorized Engineering Information.

4.14.4.4 REAPPLICATION OF LEAD SHEATHS

When the sheath does not meet the requirements of these standards, it shall not be repaired. The lead may be stripped from the entire length of cable and the cable releaded. **

4.14.4.5 TYPE OF ALUMINUM

A smooth sheath or aluminum alloy 1060,1350 or equivalent shall be tightly formed around the core of the cable.

4.14.4.6 THICKNESS OF ALUMINUM

The average thickness of the aluminum sheath shall be in accordance with Table 4-22. The minimum thickness shall in no case be less than 90 percent of the thickness specified in the table.

Table 4-21
Thickness of Lead Sheath

Calculated Diameter of Core*		Thickness of Sheath	
inches	mm	mils	mm
0.425 or less ▲	10.80 or less ▲	45†	1.14
0.426 - 0.700	10.82 - 17.78	65†	1.65
0.701 - 1.050	17.81 - 26.67	80	2.03
1.051 - 1.500	26.70 - 38.10	95	2.41
1.501 - 2.000	38.13 - 50.80	110	2.79
2.001 - 3.000	50.83 - 76.20	125	3.18
3.001 and larger ▲	76.23 and larger	140	3.56

* The thickness of lead sheath for flat twin cable shall be based on the calculated major core diameter.
† For submarine cables, the thickness of the lead sheath for the first two core diameter classifications shall be 80 mils (2.03 mm).

Table 4-22
Thickness of Smooth Aluminum Sheath

Calculated Diameter of Core*		Thickness of Sheath	
inches	mm	mils	mm
0.400 or less ▲	10.16 or less ▲	35	0.89
0.401 - 0.740	10.19 - 18.80	45	1.14
0.741 - 1.050	18.82 - 26.67	55	1.40
1.051 - 1.300	26.70 - 33.02	65	1.65
1.301 - 1.550	33.05 - 39.37	75	1.90
1.551 - 1.800	39.40 - 45.72	85	2.16
1.801 - 2.050	45.75 - 52.07	95	2.41
2.051 - 2.300	52.10 - 58.42	105	2.67
2.301 - 2.550	58.45 - 64.77	115	2.92
2.551 - 2.800	64.80 - 71.12	125	3.18
2.801 - 3.050	71.15 - 77.47	135	3.43
3.051 - 3.300	77.50 - 83.82	145	3.68
3.301 - 3.550	83.85 - 90.17	155	3.94
3.551 - 3.800	90.30 - 96.52	165	4.19
3.801 - 4.050	96.55 - 102.9	175	4.45

* The thickness of the aluminum sheath for flat twin cable shall be based on the calculated major core diameter.

Copyright National Electrical Manufacturers Association
Provided by IHS under license with NEMA
No reproduction or networking permitted without license from IHS
Not for Resale

4.14.4.7 Measurement of Thickness of Aluminum

The thickness shall be measured in accordance with 6.17.

4.14.4.8 Reapplication of Aluminum Sheaths

When the sheath does not meet the requirements of these standards, it shall not be repaired, but the aluminum may be stripped from the entire length of the cable and the cable resheathed.

4.14.5 Jute Serving Over Metallic Sheath Without Metallic Armor

4.14.5.1 Jute Servings

The thickness of one serving (or two servings) of jute applied over metallic sheathed cable for mechanical protection shall be as given in Table 4-23. (See 6.18)

Table 4-23
Thickness of Jute Servings Over Metallic Sheath (Without Metallic Armor)

Calculated Diameter of Cable under Jute Serving*		Average Thickness of Jute Serving			
		One Serving		Two Servings	
inches	mm	mils	mm	mils	mm
1.000 or less	25.40 or less	65	1.65	95	2.41
1.001-2.500	25.43-63.50	65	1.65	110	2.79
2.501 & larger	63.52 & larger	65	1.65	125	3.18

*The thickness of jute servings over metallic sheath for flat twin cable shall be based on the calculated major core diameter.

4.14.5.2 Application

When jute servings are required, the metallic sheathed cable shall be run through hot asphalt or tar compound and served with a closely wound lay of No. 16/3 impregnated jute yarn, or plied jute of equivalent thickness. If two servings are required, they shall be closely wound and applied with opposite directions of lay. The inner serving shall be an impregnated jute yarn which shall be run through hot asphalt or tar compound before the application of the outer serving which shall be No. 16/3 impregnated jute yarn, or plied jute of equivalent thickness.

For either one or two servings, the outer serving shall be run through hot asphalt or tar compound and coated with some suitable material which will prevent sticking of adjacent turns of the cable when wound on a reel.

4.14.6 Flat Metal Tape Armor

4.14.6.1 Scope

This section covers plain and zinc-coated flat steel strip-in coils for use as flat armor for electrical cables. The zinc coating shall be applied by either the hot-dip or the electro-galvanizing process such that all surfaces of the finished tape width are coated, including edges.

4.14.6.2 Tensile Strength and Elongation

The plain and zinc-coated strip shall have a tensile strength of not less than 40,000 psi (276 MPa) nor more than 70,000 psi (482 MPa). The tensile strength shall be determined on longitudinal specimens consisting of the full width of the strip when practical or on a straight specimen slit from the center of the strip. The strip shall have an elongation of not less than 10 percent in 10 inches (254 mm). The elongation shall be the permanent increase in length of a marked section of the strip, originally 10 inches (254 mm) in length, and shall be determined after the specimen has fractured. All tests shall be made prior to application of the strip to the cable.

4.14.6.3 Galvanizing Test

4.14.6.3.1 Weight of Zinc Coating

The weight of zinc coating shall be determined before application of the strip to the cable. The strip shall have a minimum weight of coating of 0.35 ounce per square foot (106.8 grams/meter^2) of exposed surface. The weight of coating specified is the total amount on both surfaces and edges, and shall be determined in accordance with the method described in ASTM A90. (See Appendix E.)

4.14.6.3.2 Adherence Of Coating

The zinc coating shall remain adherent without flaking or spalling when the strip is subjected to a 180-degree bend over a mandrel 1/8 inch (3.18 mm) in diameter. The zinc coating shall be considered as meeting this requirement if, when the strip is bent around the specified mandrel, the coating does not flake and none of it can be removed from the strip by rubbing with the fingers.

Loosening or detachment during the adherence test of superficial, small particles of zinc formed by mechanical polishing of the surface of the zinc-coated strip shall not constitute failure.

Copyright National Electrical Manufacturers Association
Provided by IHS under license with NEMA
No reproduction or networking permitted without license from IHS
Not for Resale

4.14.6.4 Width

The nominal width of metal tapes shall be not greater than that specified in Table 4-24.

For nominal widths 1.000 inch (25.4 mm) or less, the tolerance in width shall be ±31 mils. For nominal widths greater than 1.000 inch (25.4 mm), the tolerance in width shall be ±47 mils.

Table 4-24
Width of Metal Tape for Flat Armor
(Plain or Zinc Coated)

Calculated Diameter of Cable under Jute Bedding*		Nominal Width of Metal Tape	
inches	mm	inches	mm
0.450 or less	11.43 or less	0.750	19.0
0.451-1.000	11.46-25.40	1.000	25.4
1.001-1.400	25.43-35.56	1.250	31.8
1.401-2.000	35.59-50.80	1.500	38.1
2.001-3.500	50.83-88.90	2.000	50.8
3.501 or larger	88.93 or larger	3.000	76.2

*For flat twin cable, the nominal width shall be based on the calculated major core diameter.

4.14.6.5 Thickness

The nominal thickness of metal tape shall be not less than that given in Table 4-25. See 6.10.2 for method of measuring metal tape thickness.

The tolerance in the nominal thickness of both plain and zinc-coated tape shall be ±3 mils.

The zinc-coated tape shall not at any place be more than 20 percent thicker than the stripped tape thickness, which should be the specified nominal thickness for bare metal. The tolerance for nominal thickness of bare metal should apply to the stripped tape.

Table 4-25
Thickness of Metal Tape for Flat Armor
(Plain or Zinc Coated)

Calculated Diameter of Cable under Jute Bedding*		Nominal Thickness of Metal Tape	
inches	mm	mils	mm
1.000 or less	25.40 or less	20	0.51
1.001 or larger	25.43 or larger	30	0.76

*For flat twin cable, the nominal thickness shall be based on the calculated major core diameter.

4.14.6.6 Application, Lay, and Spacing

Two metal tapes shall be applied helically in the same direction over the jute bedding except that they may be applied in opposite directions where the total area of the conductors is less than 50,000 circular mils (25.34 mm^2). The direction of lay of the inner tape shall be opposite to that of the jute bedding. When applied in the same direction as the inner tape, the outer tape shall be approximately centered over the spaces between the convolutions of the inner tape. The maximum space between turns shall not exceed 20 percent of the width of the tape or 0.200 inch (5.08 mm), whichever is the greater.

During or prior to application, the tapes shall be flushed with a suitable compound to deter corrosion.

4.14.7 Interlocked Metal Tape Armor

4.14.7.1 Scope

This section covers flat metallic strip-in coils for use as interlocking armor for electrical cables. All tests shall be made prior to the application of the strip to the cable.

4.14.7.2 Steel Tape

Steel tape (except stainless) without a protective covering shall be zinc-coated. The zinc coating shall be applied by either the hot-dip or the electro-galvanizing process such that all surfaces of the finished tape width are coated, including the edges. If an outer jute or other protective covering is furnished, plain steel tape may be used. The quality of the steel tape and the requirements for the galvanizing shall be those specified in 4.14.6.2 and 4.14.6.3 for flat steel tape.

4.14.7.3 Width

The nominal width of metal tape may be less than but shall not be greater than that specified in Table 4-26.

For any width of metal tape used, the tolerance in width shall be +10 mils or -5 mils, except for aluminum which shall be ±10 mils.

TABLE 4-26
Width of Metal Tape for Interlocked Armor

Calculated Diameter of Cable under Armor		Nominal Width of Metal Tape Armor	
inches	mm	inches	mm
0.500 or less	12.70 or less	0.500	12.7
0.501-1.000	12.73-25.40	0.750	19.0
1.001-2.000	25.43-50.80	0.875	22.2
2.001 or larger	50.83 or larger	1.000	25.4

Copyright National Electrical Manufacturers Association
Provided by IHS under license with NEMA
No reproduction or networking permitted without license from IHS
Not for Resale

NEMA WC*3 80 ■ 6470247 0019346 0 ■

4.14.7.4 *Thickness.* The nominal thickness of metal tape shall be not less than that given in Table 4-27. See 6.10.2 for method of measuring metal tape thickness.

The tolerance in nominal thickness of the tape shall be ±3 mils. The zinc-coated tape shall not, at any place, be more than 20 percent thicker than the stripped tape thickness, which should be the specified nominal thickness for bare metal. The tolerance for nominal thickness of bare metal should apply to the stripped tape.

4.14.7.5 *Nonmagnetic Tape.* When nonmagnetic tapes, such as aluminum, brass, bronze, zinc or stainless steel tapes are used, the widths shall be in accordance with 4.14.7.3 and the thicknesses in accordance with 4.14.7.4.

Representative values of tensile strength and elongation for the nonmagnetic metals are given in Appendix B.

4.14.8 Galvanized Steel Wire Armor

4.14.8.1 *Scope.* This section covers zinc-coated low-carbon-steel wire for use in the armoring of borehole, vertical riser, submarine, and underground cables used for power, control and lighting circuits for normal use. For wire armor for special uses see Divisions II and III (4.14.17 through 4.14.26). All tests shall be made prior to application of the wire to the cable.

4.14.8.2 *Tensile Strength, Elongation and Torsion.* The zinc-coated wire shall be uniform in diameter and free from cracks, splints or other flaws.

4.14.8.2.1 Tensile Strength. The zinc-coated wire shall have a tensile strength of not less than 50,000 psi (35.2 kgf/mm²) and not more than 70,000 psi (49.2 kgf/mm²). The tensile strength shall be tested in accordance with ASTM E 8.

4.14.8.2.2 Elongation. The zinc-coated wire shall have an elongation of not less than 10 percent in 10 inches (254 mm). The elongation shall be the permanent increase in length of a marked section of the wire originally 10 inches (254 mm) in length and shall be determined after the specimen has fractured.

4.14.8.2.3 Torsion Test. The zinc-coated wire shall withstand, without fracture, the minimum number of twists specified in Table 4-28. This test shall be made on a sample of wire having an initial length of 6 inches (152 mm) between jaws of a standard torsion machine or equivalent with one head of the machine movable horizontally. The effective speed of rotation shall not exceed 60 rpm.

Table 4-28
Number of Twists (Torsion Test)

Nominal Wire Diameter		Minimum Number of Twists
mils	mm	
238–166	6.05–4.22	7
165–110	4.19–2.79	10
109–65	2.77–1.65	14

4.14.8.3 *Galvanizing Tests*

4.14.8.3.1 Weight of Zinc Coating. The weight of zinc coating shall be determined before the wire is applied to the cable. The wire shall have a minimum weight of coating per square foot of uncoated wire surface in accordance with Table 4-29. The zinc coating shall be tested for weight by a stripping test in accordance with ASTM A 90.

Table 4-27
Thickness of Metal Tape for Interlocked Armor

Calculated Diameter of Cable Under Armor		Nominal Thickness			
		Ambrac, Brass, Steel, Stainless Steel, Bronze and Monel Tape		Aluminum and Zinc Tape	
inches	mm	mils	mm	mils	mm
0–1.500	0–38.10	20	0.51	25	0.64
1.501 and larger	38.13 and larger	25	0.64	30	0.76

Copyright National Electrical Manufacturers Association
Provided by IHS under license with NEMA
No reproduction or networking permitted without license from IHS
Not for Resale

Table 4-27
Thickness of Metal Tape for Interlocked Armor

Calculated Diameter of Cable Under Armor		Nominal Thickness			
		Ambrac, Brass, Steel, Stainless Steel, Bronze and Monel Tape		Aluminum and Zinc Tape	
inches	mm	mils	mm	mils	mm
0–1.500	0–38.10	20	0.51	25	0.64
1.501 and larger	38.13 and larger	25	0.64	30	0.76

4.14.8 Galvanized Steel Wire Armor

4.14.8.1 *Scope.* This section covers zinc-coated low-carbon-steel wire for use in the armoring of borehole, vertical riser, submarine, and underground cables used for power, control and lighting circuits for normal use. For wire armor for special uses see Divisions II and III (4.14.17 through 4.14.26). All tests shall be made prior to application of the wire to the cable.

4.14.8.2 *Tensile Strength, Elongation and Torsion.* The zinc-coated wire shall be uniform in diameter and free from cracks, splints or other flaws.

4.14.8.2.1 Tensile Strength. The zinc-coated wire shall have a tensile strength of not less than 50,000 psi (35.2 kgf/mm^2) and not more than 70,000 psi (49.2 kgf/mm^2). The tensile strength shall be tested in accordance with ASTM E 8.

4.14.8.2.2 Elongation. The zinc-coated wire shall have an elongation of not less than 10 percent in 10 inches (254 mm). The elongation shall be the permanent increase in length of a marked section of the wire originally 10 inches (254 mm) in length and shall be determined after the specimen has fractured.

4.14.8.2.3 Torsion Test. The zinc-coated wire shall withstand, without fracture, the minimum number of twists specified in Table 4-28. This test shall be made on a sample of wire having an initial length of 6 inches (152 mm) between jaws of a standard torsion machine or equivalent with one head of the machine movable horizontally. The effective speed of rotation shall not exceed 60 rpm.

Table 4-28
Number of Twists (Torsion Test)

Nominal Wire Diameter		Minimum Number of Twists
mils	mm	
238–166	6.05–4.22	7
165–110	4.19–2.79	10
109–65	2.77–1.65	14

4.14.8.3 *Galvanizing Tests*

4.14.8.3.1 Weight of Zinc Coating. The weight of zinc coating shall be determined before the wire is applied to the cable. The wire shall have a minimum weight of coating per square foot of uncoated wire surface in accordance with Table 4-29. The zinc coating shall be tested for weight by a stripping test in accordance with ASTM A 90.

Copyright National Electrical Manufacturers Association
Provided by IHS under license with NEMA
No reproduction or networking permitted without license from IHS

Not for Resale

Table 4-29
Minimum Weights of Zinc Coating

Nominal Diameter of Coated Wire			Minimum Weight of Zinc Coating	
mils	mm	Size, BWG	Ounces per Square Foot of Exposed Wire Surface	Grams per Meter² of Exposed Wire Surface
238	6.05	4	1.00	305
220	5.59	5	1.00	305
203	5.16	6	1.00	305
165	4.19	8	0.90	275
134	3.40	10	0.80	244
109	2.77	12	0.80	244
83	2.11	14	0.60	183

4.14.8.3.2 Adherence of Coating. The zinc coating shall remain adherent when the wire is wrapped at a rate of not more than 15 turns per minute in a closed helix of at least two turns around a cylindrical mandrel of the diameter specified in Table 4-30. The zinc coating shall be considered as meeting this requirement if, when the wire is wrapped about the specified mandrel, the coating does not flake and none of it can be removed from the wire by rubbing it with the fingers.

Loosening or detachment during the adherence test of superficial, small particles of zinc formed by mechanical polishing of the surface of zinc-coated wire shall not constitute failure.

Table 4-30
Mandrel Diameter for Adherence of Coating Tests

Wire Diameter		
mils	mm	Mandrel Diameter
238–134	6.05–3.40	3 times wire diameter
133 and smaller	3.38 and smaller	2 times wire diameter

4.14.8.4 *Size of Armor.* The sizes of armor wire for submarine cables are given in Table 4-31. If the service requirements are exceptionally severe, larger sizes of armor wire may be required.*

* This paragraph is approved by NEMA as Authorized Engineering Information.

The tolerance in diameter for galvanized steel wire shall be as shown in Table 4-32.

Table 4-32
Tolerances in Diameter

Nominal Diameter of Coated Wire		Tolerances, inches
mils	mm	
238–166	6.05–4.22	±0.005
165–109	4.20–2.77	±0.004
108–65	2.74–1.65	±0.003

4.14.8.5 *Lay.* The length of lay of the armor wires shall be not less than seven nor more than twelve times their pitch diameter for all constructions except for dredge cable. For dredge cable, see 4.14.20.

"Lay" is defined as follows: "The lay of any helical element of a cable is the axial length of a turn of the helix of that element."

4.14.8.6 *Direction of Lay.* Successive layers of jute and armor shall be laid in opposite directions. The direction of lay of the armor wires shall be so chosen that birdcaging of the cable being armored shall be reduced to a minimum.

Table 4-31
Size of Galvanized Steel Armor Wire for Submarine Cable

Calculated Diameter of Cable Under Jute Bedding		Nominal Size of Armor Wire		
inches	mm	BWG	mils	mm
0–0.750	0–19.05	12	109	2.77
0.751–1.000	19.08–25.40	10	134	3.40
1.001–1.700	25.43–43.18	8	165	4.19
1.701–2.500	43.21–63.50	6	203	5.16
2.501 and larger	63.53 and larger	4	238	6.05

Copyright National Electrical Manufacturers Association
Provided by IHS under license with NEMA
No reproduction or networking permitted without license from IHS
Not for Resale

4.14.9 Jute Bedding for Armored Cable (See 4.14.11 for Interlocked Armored Cable)

4.14.9.1 *Application.* Metallic-sheathed cable to be armored shall be run through hot asphalt or tar compound before being served with a bedding of impregnated jute yarn or roving, each layer of which shall be run through hot asphalt or tar compound. If the cable is without metallic sheath, the core shall be covered as specified in 4.14.12.1 before it is run through the first application of compound.

4.14.9.2 *Direction of Lay.* The direction of lay of the jute bedding or serving shall be opposite to that of the armor directly in contact with it, except as allowed in 4.14.8.6. Adjacent layers of jute shall be applied with opposite directions of lay.

4.14.9.3 *Thickness.* The thickness of jute bedding under the armor in the finished cable shall be not less than that specified in Table 4-33. The thickness shall be determined by the use of a diameter tape and shall be considered as one-half of the difference in measurement under and over the bedding.

4.14.10 Jute Serving Overall for Armored Cable (See 4.14.11 for Interlocked Armored Cable)

4.14.10.1 *Application.* When an outer jute serving is required, the armored cable shall first be run through hot asphalt or tar compound, then served with a layer of number sixteen three-ply (No. 16/3) impregnated jute yarn applied with a short close lay, again run through hot asphalt or tar compound and finished by running through some suitable material which will prevent sticking of adjacent turns of the cable when wound on a reel.

4.14.10.2 *Direction of Lay.* The direction of lay of the jute serving shall be opposite to that of the armor in contact with it.

4.14.11 Jute for Interlocked Armored Cable

4.14.11.1 *Jute Bedding.* If jute bedding is required, the application and direction of lay shall be in accordance with 4.14.9.1 and 4.14.9.2. The thickness shall be as specified for metal taped cable in Table 4-33.

4.14.11.2 *Jute Serving Overall.* If jute serving overall is required, it shall be in accordance with 4.14.10.

4.14.12 Core Covering for Nonsheathed and Nonjacketed Cable with Metallic Armor

4.14.12.1 *Core Covering for Nonsheathed and Nonjacketed Cable.* Over the core of nonsheathed and nonjacketed cable with metallic armor, there shall be applied tape, saturated cotton braid, jute or other suitable protective covering. Tape shall be used over cores having a diameter of 0.300 inch (7.62 mm) or larger.

4.14.12.2 *Compound-filled Tape.* The tape shall meet the requirements of 4.4.1 and 4.4.2.

Table 4-33
Thickness of Jute Bedding for Armored Cable

Calculated Diameter of Cable Under Jute Bedding*		Minimum Thickness of Jute Bedding					
				Round Wire Armored Cable			
		Metal Taped		Sheathed or Jacketed		Nonsheathed or Nonjacketed	
inches	mm	mils	mm	mils	mm	mils	mm
0–0.450	0–11.43	30	0.76	45	1.14	80	2.03
0.451–0.750	11.46–19.05	45	1.14	45	1.14	80	2.03
0.751–1.000	19.08–25.40	45	1.14	65	1.65	95	2.41
1.001–2.500	25.43–63.50	65	1.65	80	2.03	110	2.79
2.501 and larger	63.53 and larger	65	1.65	95	2.41	125	3.18

* The thickness of jute bedding for flat twin cable shall be based on the calculated major core diameter.

Copyright National Electrical Manufacturers Association
Provided by IHS under license with NEMA
No reproduction or networking permitted without license from IHS

Not for Resale

4.14.13 Core Covering for Thermosetting and Thermoplastic Jacketed Cable under Armor

4.14.13.1 *Flat Steel Tape Armor.* Where a flat steel tape armor is used, a jute bedding shall be applied over the jacket before application of the armor. The thickness of the jute bedding shall be in accordance with Table 4-33. (See 6.18.) ▲

4.14.13.2 *Interlocked Armor.* Interlocked armor shall be applied directly over the jacket or tape in which it is vulcanized, no bedding being necessary.

4.14.13.3 *Round Wire Armor.* Where round wire armor is used, a jute bedding shall be applied over the jacket before application of the armor. The thickness of the jute bedding shall be in accordance with Table 4-33. (See 6.18.) ▲

4.14.14 Cross-linked Jackets Over Metallic Sheath ▲

4.14.14.1 *Reinforced Cross-Linked Jacket.* A reinforced cross-linked thermosetting jacket over a metallic sheath shall consist of a combination of treated fibrous reinforcing tapes and a neoprene jacket compound. ▲

The physical properties of the neoprene jacket compound shall meet the following requirements:

Physical requirements (see 6.4) ▲	
Tensile strength, minimum	
psi	1200
▲MPa	8.27
Elongation at rupture, minimum, percent	250
Set, maximum, percent	20
Aging requirements	
After air oven test at 70°C ± 1°C for 168 hours	
Tensile strength, minimum	
psi	1000
▲ MPa	6.89
Elongation at rupture, minimum, percent	200
After oil immersion test at 121°C ± 1°C for 18 hours	
Tensile strength and elongation, minimum, percentage of unaged value	60

Tests shall be made on samples removed from the finished cable or, where this is impractical, on a sample of the neoprene jacket compound which is identical with that on the cable and which has been given the same treatment as the neoprene jacket.

4.14.14.2 *Thickness.* The average thickness of the thermosetting jacket shall be not less than that specified in Table 4-34. The thickness shall be determined by the use of a diameter tape and shall be considered as one-half of the difference in measurement under and over the jacket. (See 6.3.3.2.)

The minimum thickness shall be not less than 80 percent of the values given in Table 4-34.

Table 4-34
Thickness of Cross-Linked Jacket Over Metallic Sheaths ▲

Calculated Diameter over Sheath		Thickness	
inches	mm	mils	mm
1.500 or less ▲	38.10 or less ▲	65	1.65
1.501–3.000	38.13–76.20	95	2.41
3.001 and over	76.23 and over	125	3.18

4.14.14.3 *Thickness of Lead Sheath.* When a cross-linked jacket is applied over a lead sheath, the average thickness of the lead sheath shall be in accordance with Table 4-35. The minimum thickness shall be not less than 90 percent of the values given in the table. (See 6.17.)

Table 4-35
Thickness of Lead Sheath for Cables Having a Cross-Linked or Thermoplastic Jacket Over Lead Sheath ▲

Calculated Diameter of Core*		Thickness of Sheath	
inches	mm	mils	mm
0.425 or less ▲	10.80 or less ▲	45†	1.14†
0.426–0.700	10.82–17.78	55†	1.40†
0.701–1.050	17.81–26.67	70	1.78
1.051–1.500	26.70–38.10	85	2.16
1.501–2.000	38.13–50.80	95	2.41
2.001–3.000	50.83–76.20	110	2.79
3.001 and larger	76.23 and larger	125	3.18

* The thickness of lead sheath for flat twin cable shall be based on the calculated major core diameter.
† For submarine cables, these thicknesses shall be 70 mils (1.78 mm).

4.14.14.4 *Thickness of Aluminum Sheath.* When a cross-linked jacket is applied over an aluminum sheath, the average thickness of the aluminum sheath shall be the same as that given in Table 4-22. (See 6.17.) ▲

▲ Editorially revised.

Copyright National Electrical Manufacturers Association
Provided by IHS under license with NEMA
No reproduction or networking permitted without license from IHS
Not for Resale

4.14.15 Thermoplastic Jackets Over Metallic Sheath ▲

4.14.15.1 *Thermoplastic Jackets.* Thermoplastic jackets, when used, shall be extruded over the metallic sheath and shall fit tightly thereto. They shall be either: ▲

1. Polyvinyl chloride meeting the requirements given in 4.13.5, except that the cold bend requirements shall be as given in 4.14.15.4, or
2. Black polyethylene meeting the requirements given in 4.13.6, or
3. Black chlorinated polyethylene meeting the requirements given in 4.13.7, except that the cold bend requirements shall be as given in 4.14.15.4.●

4.14.15.2 *Thickness.* The average thickness of the thermoplastic jacket shall be not less than that specified in Table 4-36. The minimum thickness shall be not less than 70 percent of the values given in the table. The average thickness of the jacket shall be taken as one-half the difference in diameters over and under the jacket as determined by circumference measurements. The minimum thickness of the jacket shall be determined by direct measurements with a micrometer microscope on a ring of jacket removed from the cable. ▲

Table 4-36
Thickness of Thermoplastic Jacket Over Metallic Sheath ▲

Calculated Diameter Over Sheath		Thickness of Jacket ▲	
inches	mm	mils	mm
0.750 or less ▲	19.05 or less ▲	50	1.27
0.751–1.500	19.08–38.10	65	1.65
1.501–2.250	38.13–57.15	80	2.03
2.251–3.000	57.18–76.20	95	2.41
3.001 and larger	76.23 and larger	110	2.79

4.14.15.3 *Tightness of Application of Polyethylene Jacket to Sheath.* The jacket shall be removed for 5 inches (127 mm) from each end of a 12-inch (305 mm) sample of cable, leaving a 2-inch (50.8-mm) ring intact and undisturbed at the center. The sample shall then be inserted vertically in a hole in a flat rigid plate which is at least 10 mils (0.254 mm) larger than the diameter over the sheath but not over 40 mils (1.02 mm) larger. No movement of the 2-inch (50.8-mm) ring shall take place within a period of 1 minute when weight is applied to the upper end of the sample. The weight to be applied shall be equal to 10 pounds per inch (1.77 kn/m) of outside diameter of the metallic sheath minus the weight of the prepared sample, rounded off to the nearer half pound. ▲

4.14.15.4 *Cold Bend.* When required, the manufacturer shall submit evidence that the jacket has been tested on similar cable and meets the following requirement. The jacketed cable shall be subjected to the same bend test and with the same frequency as required for the underlying core. The test temperature shall be minus 10°C or colder. After the final bend, the jacket shall show no cracks visible to the normal unaided eye. (See 6.19.3.) ▲

4.14.15.5 *Irregularity Inspection.* Jackets shall not have irregularities as determined by the procedure of paragraph 3.8 of ICEA T-27-581. The methods to be used are:

Method B	Method C
Chlorinated Polyethylene, Thermoplastic	Polyvinyl Chloride Polyethylene

(Table 4-37 has been deleted on July 22, 1987.)

4.14.15.6 *Thickness of Lead Sheath.* When a thermoplastic jacket is applied over a lead sheath, the thicknesses of the lead sheath shall be in accordance with 4.14.14.3. (See 6.17.) ▲

4.14.15.7 *Thickness of Aluminum Sheath.* When a thermoplastic jacket is applied over an aluminum sheath, the average thickness of the aluminum sheath shall be the same as that given in Table 4-22. (see 6.17.) ▲

▲ Editorially revised.

Copyright National Electrical Manufacturers Association
Provided by IHS under license with NEMA 15-1983.
No reproduction or networking permitted without license from IHS
Not for Resale

4.14.16 Jackets over Metallic Armor

Jackets, when used, shall be either thermoplastic as described in 4.14.16.1 or crosslinked as described in 4.14.16.2.

4.14.16.1 THERMOPLASTIC TYPES

Thermoplastic jackets, when used, shall be extruded over the metallic armor and shall fit tightly thereto. They shall be either:

1. Polyvinyl chloride meeting the requirements of 4.13.5 except that the cold bend requirements shall be as given in 4.14.15.4, or
2. Black polyethylene meeting the requirements of 4.13.6, or
3. Chlorinated polyethylene meeting the requirements given in 4.13.7 except that the cold bend requirements shall be as given in 4.14.15.4.

4.14.16.2 CROSSLINKED TYPES

Crosslinked jackets, when used, shall be extruded over the metallic armor and shall fit tightly thereto. A separator shall be permitted to be used over the armor. The coverings shall be either:

1. Neoprene meeting the requirements of 4.13.3, or
2. Chlorosulfonated polyethylene meeting the requirements of 4.13.10, or
3. Chlorinated polyethylene meeting the requirements of 4.13.11.

4.14.16.3 THICKNESS

The average thickness of the jacket shall be not less than that specified in Table 4-38. The minimum thickness shall be not less than 70 percent of the value given in the table. The minimum and maximum thickness of the jacket shall be determined directly with a micrometer, a steel scale with pocket glass, or a micrometer microscope on a ring of jacket removed from the cable. The average of these determinations shall be taken as the average thickness of the jacket.

4.14.16.4 IRREGULARITY INSPECTION

Jackets shall not have irregularities as determined by the procedure of paragraph 3.8 of ICEA T-27-581. The methods to be used are as follows:

Method A	Method B	Method C
Neoprene (4.13.3)	Chlorinated polyethylene thermoplastic (4.13.7) Chlorosulfonated polyethylene (4.13.10)	Polyvinyl chloride (4.13.5) Polyethylene (4.13.6) Chlorinated polyethylene crosslinked (4.13.11)

Division II

Round Wire Armor for Borehole, Dredge, Shaft, and Vertical Riser Cable

4.14.17 Scope

Division II gives details of construction of armor applicable particularly to borehole, dredge, shaft, and vertical riser cables.

4.14.18 General

The requirements of Division I pertaining to quality of materials, design, and construction apply also to borehole, dredge, shaft, and vertical riser cable (which are designed for special uses), except as to the particular details expressly set forth in the following sections for the respective types of cable, or as otherwise modified.

4.14.19 Borehole Cable (Suspended at One End only)

4.14.19.1 ARMOR

Galvanized round steel wire shall be used for borehole cable.

4.14.19.2 SIZE OF ARMOR WIRE

The size of the armor wire shall be as given in Table 4-39.

The tensile safety factor [based on 50000 psi (345 MPa)] shall no be less than five. If the required tensile safety factor is not maintained, the next larger size wire given in the table should be used.

4.14.19.3 LAY

The length of lay of the armor wires shall be not less than seven nor more than twelve times their pitch diameter. The armor shall be applied closely without appreciable space between the wires.

Table 4-38
Thickness of Jacket Over Metallic Armor

Calculated Diameter of Cable Under Jacket		Thickness			
		All Cables (Except Interlocked or Corrugated Armor)		Cables with Interlocked or Corrugated Armor	
inches	mm	mils	mm	mils	mm
0.750 or less	19.05 or less	50	1.27	50	1.27
0.751 – 1.500	19.08 – 38.10	65	1.65	50	1.27
1.501 – 2.250	38.13 – 57.15	80	2.03	60	1.52
2.251 – 3.000	57.18 – 76.20	95	2.41	75	1.90
3.001 and larger	76.23 and larger	110	2.79	85	2.16

Copyright National Electrical Manufacturers Association
Provided by IHS under license with NEMA
No reproduction or networking permitted without license from IHS
Not for Resale

Table 4-39
Size of Galvanized Steel Armor Wire for Borehole Cable

Calculated Diameter of Cable Under Jute Bedding		Nominal Size of Armor Wire		
inches	mm	BWG	mils	mm
0.750 or less ▲	19.05 or less ▲	12	109	2.77
0.751–1.000	19.08–25.40	10	134	3.40
1.001–1.700	25.43–43.18	8	165	4.19
1.701–2.500	43.21–63.50	6	203	5.16
2.501 and larger	63.53 and larger	4	238	6.05

"Lay" is defined as follows: "The lay of any helical element of a cable is the axial length of a turn of the helix of that element."

4.14.20 Dredge Cable

4.14.20.1 Armor

Galvanized round steel wire shall be used for dredge cable and shall be applied with a short lay.

4.14.20.2 Size of Armor Wire

The size of the armor wires shall be as given in Table 4-40.

4.14.20.3 Pitch Ratio

The pitch ratio limits shall be in accordance with Table 4-41.

The pitch ratio is taken as the quotient resulting from dividing the length of lay of the armor wires by the pitch diameter of the armor wires.

Where unusual service conditions exist, it may be desirable to modify the above pitch ratio. If so, it should be defined before the cable design is finalized.

4.14.21 Shaft Cable

When shaft cable is clamped to the shaft structure or wall, the metallic coverings used (either tape or wire) shall comply with the requirements of 4.14.3 through 4.14.16. If, during installation, the shaft cable is suspended from one end, galvanized round steel wire armor shall be used.

The size of the armor wires shall be as given in Table 4-42, but the tensile safety factor shall be not less than five.

Table 4-40
Size of Galvanized Steel Armor Wire for Dredge Cable

Calculated Diameter of Cable Under Jute Bedding		Nominal Size of Armor Wire		
inches	mm	BWG	mils	mm
1.700 or less ▲	43.18 or less ▲	12	109	2.77
1.701–2.500	43.21–63.50	10	134	3.40
2.501 and larger	63.53 and larger	8	165	4.19

▲ Editorially revised.

4.14.22 Vertical Riser Cable (Suspended at One End Only)

4.14.22.1 Nonsheathed Cable for Installation within Buildings

4.14.22.1.1 Armor

Galvanized round steel wire shall be used for vertical riser cable.

4.14.22.1.2 Size of Armor Wire

The size of the armor wires shall be as given in Table 4-42.

The tensile safety factor [based on 50000 psi (345 MPa)] shall be not less than seven. If the required tensile safety factor is not maintained, the next larger size wire given in the table should be used.

4.14.22.2 Size of Armor Wire for Sheathed Vertical Riser Cable

The size of armor wire for sheathed vertical riser cable for indoor installation shall be in accordance with 4.14.19.2 for borehole cable, but with a tensile safety factor of not less than four.

4.14.23 Wire Band Serving

Where wire band servings directly over the armor are required for cable suspended vertically from one end, No. 12 BWG (109 mils) (2.77 mm) wire shall be used. The length of the serving band and the spacing of the band throughout the length of the cable shall be in accordance with Table 4-43.

The wire bands shall be applied sufficiently tight to prevent their movement along the cable as a result of handling the cable during installation.

Table 4-41
Pitch Ratio of Galvanized Wire Armor for Dredge Cable

Calculated Diameter Over the Armor Wire		Minimum Pitch Ratio
inches	mm	
0-2.500 or less ▲	0-63.50 or less ▲	2.5
2.501 and larger	63.53 and larger	3.0

Table 4-42
Size of Galvanized Steel Armor Wire for Shaft Cable and Vertical Riser Cable

Calculated Diameter of Cable Under Jute Bedding		Nominal Size of Armor Wire		
inches	mm	BWG	mils	mm
1.000 or less ▲	25.40 or less ▲	12	109	2.77
1.001–1.700	25.43–43.18	10	134	3.40
1.701–2.500	43.21–63.50	8	165	4.19
2.501 and larger	63.53 and larger	6	203	5.16

Copyright National Electrical Manufacturers Association
Provided by IHS under license with NEMA
No reproduction or networking permitted without license from IHS
Not for Resale

Division III

Round Wire Armor for Buried Cable

4.14.24 Scope. Division III gives details of construction of armor for buried land cables where greater longitudinal strength than that provided by flat tape armor is required, but not the strength of the regular armor required for submarine service.

4.14.25 General. The requirements of Division I (4.14.3 through 4.14.16) pertaining to quality of materials, design and construction apply also to buried round wire armored cables, except as to particular details expressly set forth in the following sections or as otherwise modified.

4.14.26 Armor Wire and Jute Servings (Sheathed and Nonsheathed Cables). The size of armor wire and thickness of jute bedding shall be in accordance with Table 4-44.

The length of lay of the armor wires shall be not less than three nor more than twelve times their pitch diameter. This lay shall be used such that the armor will be applied closely without appreciable space between wires.

A jute serving as specified in 4.14.10 shall be applied over the armor.

Table 4-43
Spacing and Length of Band Servings

Calculated Diameter Over the Armor Wire		Maximum Band Spacing		Length of Band	
inches	mm	feet	meters	inches	mm
0–1.500	0–38.10	50	15.2	3	76.2
1.501–2.500	38.13–63.50	35	10.7	4	102
2.501 and larger	63.53 and larger	25	7.6	4	102

Table 4-44
Thickness of Jute Bedding and Size of Armor Wire

Calculated Diameter of Cable Under Jute Bedding		Minimum Thickness of Jute Bedding		Nominal Size of Armor Wire		
inches	mm	mils	mm	BWG	mils	mm
0–0.750	0–19.05	45	1.14	14	83	2.11
0.751–1.000	19.08–25.40	65	1.65	12	109	2.77
1.001–1.700	25.43–43.18	80	2.03	10	134	3.40
1.701–2.500	43.21–63.50	80	2.03	8	165	4.19
2.501 and larger	63.53 and larger	95	2.41	6	203*	5.16*

* For cable diameters over 2.500 inches (63.50 mm) where greater strength is desired than is obtainable with No. 6 BWG (203 mils) (5.16 mm) or where the required number of wires exceeds the capacity of the armoring machine, a No. 4 BWG (238 mils) (6.05 mm) wire may be used.

Copyright National Electrical Manufacturers Association
Provided by IHS under license with NEMA
No reproduction or networking permitted without license from IHS

Not for Resale

WC 3-80 6470247 0004721 2

Part 5

ASSEMBLY, FILLERS, BINDERS, AND CONDUCTOR IDENTIFICATION ▲

5.1 Assembly of Multiple-conductor Cables. Multiple-conductor cables shall be assembled in accordance with Part 5 unless otherwise modified by Part 7. ▲

5.2 Multiple-conductor Round Cables. Where cables consist of a core of conductors without a layer of conductors over them, the individual conductors shall be cabled together with a left-hand lay.

Where one layer of conductors is involved, the layer shall have a left-hand lay. Where more than one layer of conductors is involved, the outer layer shall have a left-hand lay.

A left-hand lay is defined as a counterclockwise twist away from the observer.

Where necessary, the interstices shall be filled to give the completed cable a substantially circular cross section (see 5.4).

The length of lay of the individual conductors in the outer layer of any cable shall not exceed the value calculated from the factor given in Table 5-1. For cables with four or less conductors, the individual conductor diameter is the calculated overall diameter of the individual conductor. For cables with five or more conductors, the assembled diameter is the calculated diameter over the assembled conductors. When more than one layer of conductors is involved, the lay of the conductors in the inner layers shall be governed by the construction of the cabling machine.

5.3 Flat Twin Cables. For flat twin cables with diameters over the individual conductor of 0.500 inch (12.70 mm) or less, filling is not required. For flat twin cables with diameters over the individual conductor of more than 0.500 inch (12.70 mm), filling shall be used to give a substantially flat surface parallel to the plane of the major axis.

Flat twin cables are not recommended where the diameter over the conductor insulation exceeds 1 inch (25.4 mm). **

Table 5-1

Number of Conductors in Cable	Factors for Maximum Length of Lay*
2	30 times individual conductor diameter
3	35 times individual conductor diameter
4	40 times individual conductor diameter
5 or more	15 times assembled diameter

* For conductor assemblies without an overall covering, the maximum length of lay shall be 60 times the diameter of the largest insulated conductor.

5.4 Fillers. Fillers of suitable material shall be used in the interstices of the cable where necessary to give the completed cable a substantially circular cross section.

Fillers, if used in cables with moisture-resisting fibrous coverings, shall be saturated or moisture resisting.

Fillers, if used in cables covered with moisture-impervious sheaths or rubber or synthetic jackets, shall be dry or saturated.

5.5 Binder. Multiple-conductor assemblies (except flat twin cables) which have a moisture-resisting fibrous outer covering or a lead sheath shall have a binder over the assembly.

5.6 Conductor Identification ▲

5.6.1 Power Cables. When required, conductors shall be identified by any suitable means.

5.6.2 Control Cables

(See Part 7.)

▲ Editorially revised.

Copyright National Electrical Manufacturers Association
Provided by IHS under license with NEMA
No reproduction or networking permitted without license from IHS
ce is approved by NEMA as Authorized Engineering Information.
Not for Resale

Table 5-2
Color Sequence for Control Cables

Conductor Number	Background or Base Color	First Tracer Color	Second Tracer Color	Conductor Number	Background or Base Color	First Tracer Color	Second Tracer Color
1*	Black	...	...	65	Green	Orange	Blue
2	White	...	...	66	Orange	White	Red
3	Red	...	...	67	Blue	White	Red
4	Green	...	...	68	Black	Green	Blue
5	Orange	...	...	69	White	Green	Blue
6	Blue	...	...	70	Red	Green	Blue
7	White	Black	...	71	Green	White	Red
8	Red	Black	...	72	Orange	Red	Black
9	Green	Black	...	73	Blue	Red	Black
10	Orange	Black	...	74	Black	Orange	Blue
11	Blue	Black	...	75	Red	Orange	Blue
12	Black	White	...	76	Green	Red	Black
13	Red	White	...	77	Orange	White	Green
14	Green	White	...	78	Blue	White	Green
15	Blue	White	...	79	Red	White	Orange
16	Black	Red	...	80	Green	White	Orange
17	White	Red	...	81	Blue	Black	Green
18	Orange	Red	...	82	Orange	White	...
19	Blue	Red	...	83	Green	Red	...
20	Red	Green	...	84	Black	Green	...
21	Orange	Green	...	85	White	Green	...
22	Black	White	Red	86	Blue	Green	...
23	White	Black	Red	87	Black	Orange	...
24	Red	Black	White	88	White	Orange	...
25	Green	Black	White	89	Red	Orange	...
26	Orange	Black	White	90	Green	Orange	...
27	Blue	Black	White	91	Blue	Orange	...
28	Black	Red	Green	92	Black	Blue	...
29	White	Red	Green	93	White	Blue	...
30	Red	Black	Green	94	Red	Blue	...
31	Green	Black	Orange	95	Green	Blue	...
32	Orange	Black	Green	96	Orange	Blue	...
33	Blue	White	Orange	97	Yellow	...	...
34	Black	White	Orange	98	Yellow	Black	...
35	White	Red	Orange	99	Yellow	White	...
36	Orange	White	Blue	100	Yellow	Red	...
37	White	Red	Blue	101	Yellow	Green	...
38	Black	White	Green	102	Yellow	Orange	...
39	White	Black	Green	103	Yellow	Blue	...
40	Red	White	Green	104	Black	Yellow	...
41	Green	White	Blue	105	White	Yellow	...
42	Orange	Red	Green	106	Red	Yellow	...
43	Blue	Red	Green	107	Green	Yellow	...
44	Black	White	Blue	108	Orange	Yellow	...
45	White	Black	Blue	109	Blue	Yellow	...
46	Red	White	Blue	110	Black	Yellow	Red
47	Green	Orange	Red	111	White	Yellow	Red
48	Orange	Red	Blue	112	Green	Yellow	Red
49	Blue	Red	Orange	113	Orange	Yellow	Red
50	Black	Orange	Red	114	Blue	Yellow	Red
51	White	Black	Orange	115	Black	Yellow	White
52	Red	Orange	Black	116	Red	Yellow	White
53	Green	Red	Blue	117	Green	Yellow	White
54	Orange	Black	Blue	118	Orange	Yellow	White
55	Blue	Black	Orange	119	Blue	Yellow	White
56	Black	Orange	Green	120	Black	Yellow	Green
57	White	Orange	Green	121	White	Yellow	Green
58	Red	Orange	Green	122	Red	Yellow	Green
59	Green	Black	Blue	123	Orange	Yellow	Green
60	Orange	Green	Blue	124	Blue	Yellow	Green
61	Blue	Green	Orange	125	Black	Yellow	Blue
62	Black	Red	Blue	126	White	Yellow	Blue
63	White	Orange	Blue	127	Red	Yellow	Blue
64	Red	Black	Blue				

*This conductor is in the inside of the assembly.

Copyright National Electrical Manufacturers Association
Provided by IHS under license with NEMA
No reproduction or networking permitted without license from IHS

Not for Resale

Base and tracer colors shall be recognizably the first 21 color combinations given in Table 5-2 and shall approximately, but need not necessarily exactly, match the color shades specified in Method 5.

Base colors may be obtained by suitable color coatings applied to the insulation or jacket surface or by colored insulation or jacket compound.

Tracers shall be colored stripes or bands marked on the surface of the insulation or jacket in such manner as to afford distinctive circuit coding throughout the length of each wire. Tracers may be in continuous or broken lines, such as a series of dots or dashes, and shall be applied longitudinally, annularly, spirally or in other distinctive patterns.

5.6.2.1.2 Method 2—Neutral Colored Compounds With Tracers. This method uses a neutral colored compound, such as tan on all conductors, with tracers as defined in Method 1 and in accordance with Table 5-3. For cables composed of more than 21 conductors, these 21 color combinations shall be repeated in regular sequence to the extent necessary to provide such identification of all conductors.

5.6.2.1.3 Method 3—Neutral or Single-color Compounds With Surface Printing of Numbers and Color Designations. This method uses a single-color insulation or covering on all conductors with printed conductor numbers and color designations as given for the first 21 conductor numbers in Table 5-2. For cables composed of more than 21 conductors, these 21 color combinations shall be repeated in regular sequence to the extent necessary to provide such identification of all conductors.

For example, for conductors 1 to 7, inclusive:

1—Black 1—Black 1—Black, etc.
2—White 2—White 2—White, etc.
3—Red 3—Red 3—Red, etc.
4—Green 4—Green 4—Green, etc.
5—Orange 5—Orange 5—Orange, etc.
6—Blue 6—Blue 6—Blue, etc.
7—White-Black 7—White-Black, etc.
etc.—(8 to 21 conductors)

5.6.2.1.4 Method 4—Neutral or Single-color Compounds With Surface Printing of Numbers. This method uses a single-color insulation or covering on all conductors with printed conductor numbers only for the first 21 conductor numbers given in Table 5-2. For cables composed of more than 21 conductors, these 21 conductor numbers shall be repeated in regular sequence to the extent necessary to provide such identification of all conductors.

5.6.2.2 *Method 5—Individual Color Coding With Braids.* If colored marker braids are required, the color sequence of the conductors in the cable, beginning with black on the inside, shall be in accordance with Table 5-2. When more than one color is required, the first color named in the table shall be the background color. The shades of the colors shall approximately match those identified by the numbers given in Table 5-4 as found in the "Color Card" of the Color Association of the U.S., Inc., Tenth Edition. ▲

The tracers shall consist of three carriers with each carrier composed of a minimum of two ends. Where two tracers are used, they shall be crossed.

Table 5-3

Conductor Number	First Tracer Color (e.g., Wide Tracer)	Second Tracer Color (e.g., Narrow Tracer)
1*	Black	...
2	White	...
3	Red	...
4	Green	...
5	Orange	...
6	Blue	...
7	White	Black
8	Red	Black
9	Green	Black
10	Orange	Black
11	Blue	Black
12	Black	White
13	Red	White
14	Green	White
15	Blue	White
16	Black	Red
17	White	Red
18	Orange	Red
19	Blue	Red
20	Red	Green
21	Orange	Green

* This conductor is in the inside of the assembly.

Table 5-4 ▲
SHADES OF COLOR

Color	Color Card Designation	Color Card Number 10th Edition*
Black	...	...
White	White	80002 (70001)
Red	Scarlet	80080 (70080)
Blue	Marine Corps	80048 (70048)
Green	Emerald	80063 (70063)
Orange	Orange	80069 (70069)
Yellow	Jasmine	80067 (70067)
Brown	Brown	70119 (80167)

*Parenthetical number corresponds to the obsolete 9th Edition cross-reference number.

Copyright National Electrical Manufacturers Association
Provided by IHS under license with NEMA
No reproduction or networking permitted without license from IHS

5.6.2.3 *Method 6—Layer Identification.* For control cables having braidless or jacketed individual conductors requiring layer-tracer identification, one conductor of each layer of the cable shall be covered by a braid or tape, or shall be provided with a raised ridge or ridges to function as a tracer, or be otherwise distinctively marked or colored.

5.6.2.4 *Color Coding of Paired Conductors.* See 7.8.5.3.

Copyright National Electrical Manufacturers Association
Provided by IHS under license with NEMA
No reproduction or networking permitted without license from IHS

Not for Resale

PART 6
TESTING AND TEST METHODS

6.1 TESTING

All wires and cables shall be tested at the factory to determine their compliance with the requirements given in Parts 2, 3, 4, 5, and 7. When there is a conflict between the test methods given in Part 6 and publications of other organizations to which reference is made, the requirements given in Part 6 shall apply.

Tests shall consist of the following, as required, namely, (1) tests on samples—see 6.2 to 6.23, inclusive, 6.27, and 6.28 (2) electrical tests on entire lengths of completed cables—see 6.24 to 6.26, inclusive, and (3) conductor resistance tests—see 6.3—on samples or on entire lengths of completed cables. ▲

The test methods described in Part 6 are not completely applicable to all types of wires and cables, nor do they include every test applicable to a particular type of wire or cable. To determine which tests are to be made, refer to the parts in this publication which set forth the requirements to be met by the particular material or type of cable.

6.2 TESTS ON SAMPLES

Tests shall be made on samples selected at random. Each test sample shall be taken from the accessible end of different coils or reels. Each coil or reel selected and the corresponding sample shall be identified. The number and lengths of samples shall be as specified under the individual tests.

6.3 CONDUCTOR TEST METHODS

When samples are measured, they shall be selected in accordance with Table 6-2.

6.3.1 Method for Direct Current Resistance Determination

Measurements shall be made either on a sample at least 1 foot (30.5 cm) long or on the entire length of completed cable. When the nominal resistance is less than 1 ohm, the measurement shall be made with a Kelvin-type bridge or a potentiometer. When the nominal resistance is 1 ohm or more, the measurement shall be made with a Kelvin-type bridge, or a Wheatstone bridge, or a potentiometer.

When measurements are made on a sample, either as original measurements or for verification, the following precautions shall be taken:

1. Current contacts shall be made in such a way as to assure essentially uniform current density among the wires.

2. When potential leads are used, the distance between each potential contact and the corresponding current contact shall be at least equal to 1½ times the circumference of the specimen. When a Kelvin-type bridge is used, the yoke resistance (between reference standard and test specimen) shall be appreciably smaller than that of either the reference standard or the test specimen unless a suitable lead compensation is used, or it is known that the coil and lead ratios are sufficiently balanced so that variation in yoke resistance will not decrease the bridge accuracy below that given in item 4.

3. The distance between potential electrodes shall be measured to an accuracy of ± 0.05 percent. To assure this accuracy in measuring the length between potential contacts, the surface in contact with the test specimen shall be a substantially sharp knife edge.

4. Resistance measurements shall be made to an accuracy of ± 0.15 percent. To assure a correct reading, the reference standard and the test specimen should be allowed to come to the same temperature as the surrounding medium. (If the reference standard is made of manganin, it is possible to obtain correct readings with the test specimen at reference temperatures other than room temperature.) ▲

5. In all resistance measurements, the measuring current raises the temperature of the medium. Therefore, the magnitude of the current shall be low and the time of its use short enough so that changes in resistance cannot be detected with the galvanometer.

6. In bridge measurements, the potential contact resistance shall be as low as possible. If low contact resistance cannot be achieved, appropriate contact-resistance corrective circuits shall be used. To eliminate errors due to contact potential, two readings, one direct and one with current reversed, shall be taken in direct succession. Check tests may be made by turning the specimen end for end and repeating the test. The material used for the two potential contacts shall be the same to minimize imbalanced contact potentials. If necessary, the contact surfaces shall be cleaned.

6.3.2 Methods for Cross-Sectional Area Determination

6.3.2.1 Cross-Sectional Area by Diameter Measurement

The cross-sectional area shall be calculated as follows:

Copyright National Electrical Manufacturers Association
Provided by IHS under license with NEMA
No reproduction or networking permitted without license from IHS
Not for Resale

▲ Editorially revised.

Table 6-1

Factors for Converting Measured d-c Resistance to 25 °C (77 °F)

Temperature, Degrees, C	Multiplying Factor for Copper	Multiplying Factor for Aluminum
0	1.107	1.110
5	1.084	1.085
10	1.061	1.063
15	1.040	1.041
20	1.020	1.020
25	1.000	1.000
30	0.981	0.981
35	0.963	0.962
40	0.945	0.944
45	0.928	0.927
50	0.912	0.910
55	0.896	0.894
60	0.881	0.878
65	0.866	0.863
70	0.852	0.849
75	0.838	0.835
80	0.825	0.821
85	0.812	0.808
90	0.800	0.796

The correction factors are based upon copper having 100 percent conductivity and aluminum having 61 percent conductivity. The factors are derived from the formulae:

$$R_1 = R_2 \frac{259.5}{234.5 + T_2} \quad \text{for copper}$$

$$R_1 = R_2 \frac{253}{228 + T_2} \quad \text{for aluminum}$$

Where:

R_1 = Resistance at 25 °C
R_2 = Measured resistance at test temperature T_2.

For more accurate determination of resistance, allowing for different conductivities, see "Copper Wire Tables," National Bureau of Standards Handbook 100; or "Aluminum Wire Tables," National Bureau of Standards Handbook 109, and ASTM B193. (This paragraph is approved by NEMA as Authorized Engineering Information.)

Table 6-2
Number of Samples

Quantity of Completed Cable Ordered		Number of Samples
feet	meters	
Less than 2000	Less than 610	0
2000-10000	610-3048	1
Each 10000 or fraction thereof from 10000-50000	Each 3048 or fraction thereof from 3048-15240	1
Each additional 50000 or fraction thereof	Each additional 15 240 or fraction thereof	1

Table 6-3 deleted.

Copyright National Electrical Manufacturers Association
Provided by IHS under license with NEMA
No reproduction or networking permitted without license from IHS

Not for Resale

$$A = 10^{-3} \sum_{i=1}^{n} d_i^2$$

Where:

A = cross-sectional area in kcmil
d_i = diameter of the ith wire in mils determined according to 6.3.3.1
n = total number of wires in conductor

6.3.2.2 CROSS-SECTIONAL AREA BY WEIGHT

The cross-sectional area shall be determined in accordance with ASTM B263.

6.3.3 Methods for Diameter Determination

6.3.3.1 DIAMETER BY MICROMETER MEASUREMENT

Diameter measurements shall be made with a micrometer or other suitable instrument readable to at least 0.0001 inch. Round wires shall be measured at each end of the sample and near the middle of the sample. The average of the three measurements shall be taken as the diameter.

Stranded conductors shall be measured around the circumference of the conductor perpendicular to the axis of the conductor and on the extensions of a line through the center of the conductor and through the center of two wires in the outer layer which are 180 degrees apart. The average of three measurements shall be taken as the diameter.

6.3.3.2 DIAMETER BY TAPE MEASUREMENT

A diameter tape readable to at least 0.005 inch shall be wrapped one turn (360°) around the circumference of the conductor, tightly and perpendicular to the axis of the conductor. The average diameter of the conductor shall be read directly from the diameter tape. ▲

6.4 TEST SAMPLES AND SPECIMENS FOR PHYSICAL AND AGING TESTS

6.4.1 General

Physical and aging tests shall be those required by Parts 3, 4, and 7.

6.4.2 Number of Thickness Measurements

When the lot of wire to be inspected consists of two coils or reels, or less, at least one determination of the thickness shall be made on each coil or reel. When the lot consists of more than two coils or reels and less than 20 coils or reels, at least one determination of the thickness shall be made on each of two coils or reels taken at random. If the lot consists of 20 or more coils or reels, not less than 10 percent of the coils or reels shall be selected at random and at least one determination of the thickness shall be made on each coil or reel so selected. In the case of multiple-conductor cables, the measurements shall be made on the individual conductors before they are cabled.

6.4.3 Measurement of Thickness

The measurement of thickness for cables with unbonded components shall be made with either a micrometer or microscope but, for cables with bonded components, shall be made only with a microscope. The micrometer and microscope shall be capable of making measurements accurate to at least 0.001 inch.

6.4.3.1 MICROMETER MEASUREMENTS

When a micrometer is used, the average thickness of the insulation shall be taken as one-half of the difference between the mean of the maximum and minimum diameters over the insulation at one point and the average diameter over the conductor or any separator measured at the same point. The minimum thickness of the insulation shall be taken as the difference between a measurement made over the conductor or any separator plus the thinnest insulation wall, and the diameter over the conductor or any separator. The first measurement shall be made after slicing off the thicker side of the insulation. The thickness of any separator shall not be included in the thickness of insulation.

If the wire or cable has a jacket, the jacket shall be removed and the minimum and maximum thickness of the jacket determined directly with a micrometer. The average of these determinations shall be taken as the average thickness of the jacket.

6.4.3.2 MICROSCOPE MEASUREMENTS

When a microscope is used, the maximum and minimum thickness shall be determined from a specimen cut perpendicular to the axis of the sample so as to expose the full cross-section. The average of these determinations shall be taken as the average thickness.

Copyright National Electrical Manufacturers Association
Provided by IHS under license with NEMA Originally revised.
No reproduction or networking permitted without license from IHS
2560
Not for Resale

Table 6-4
Number and Length of Samples

Quantity of Completed Cable Ordered		Size of Conductor		Number of Samples	Minimum Length of Each Sample	
feet	meters	kcmil	mm^2		conductor feet	conductor meters
Less than 2000	Less than 610	Less than 250	Less than 127	none	...	...
Less than 1000	Less than 305	250 and larger	127 and larger	none	...	...
2000–50000	610–15240	Less than 250	Less than 127	1	6	1.8
1000–25000	305–7620	250 and larger	127 and larger	1	3	0.9
More than 25000	More than 7620					
First 25000	First 7620	250 and larger	127 and larger	1	3	0.9
Each additional 25000	Each additional 7620	250 and larger	127 and larger	1	3	0.9
More than 50000	More than 15240					
First 50000	First 15240	Less than 250	Less than 127	1	6	1.8
Each additional 50,000	Each additional 15240	Less than 250	Less than 127	1	6	1.8

Table 6-5
Number and Length of Samples

Quantity of Completed Cable Ordered		Nominal Overall Diameter of Cable		Number of Samples	Minimum Length of Each Sample	
feet	meters	inches	mm		cable feet	cable meters
Less than 2000	Less than 610	Less than 1.0	Less than 25.4	none	...	...
Less than 1000	Less than 305	1.0 and larger	25.4 and larger	none	...	...
2000-50000	610-15240	Less than 1.0	Less than 25.4	1	6	1.8
1000-25000	305-7620	1.0 and larger but less than 2.0	25.4 and larger but less than 50.8	1	3	0.9
		2.0 and larger	50.8 and larger	1	2	0.6
More than 50000	More than 15240					
First 50000	First 15240	Less than 1.0	Less than 25.4	1	6	1.8
Each additional 50000	Each additional 15240	Less than 1.0	Less than 25.4	1	6	1.8
More than 25000	More than 7620					
First 25000	First 7620	1.0 and larger but less than 2.0	25.4 and larger but less than 50.8	1	3	0.9
Each additional 25000	Each additional 7620	1.0 and larger but less than 2.0	25.4 and larger but less than 50.8	1	3	0.9
More than 25000	More than 7620					
First 25000	First 7620	2.0 and larger	50.8 and larger	1	2	0.6
Each additional 25000	Each additional 7620	2.0 and larger	50.8 and larger	1	2	0.6

Copyright National Electrical Manufacturers Association
Provided by IHS under license with NEMA
No reproduction or networking permitted without license from IHS

Not for Resale

6.4.4 Sampling of Insulation for Physical and Aging Tests. Samples of insulated conductors for the unaged and aged physical tests shall be taken after vulcanization of the insulation but prior to the application of all coverings except those applied over the insulation before it is vulcanized.

For insulation subject to a second vulcanization, samples of insulated conductors may be taken either before or after the second vulcanization.**

Samples of insulated conductors shall be selected in accordance with Table 6-4.

6.4.5 Sampling of Jacket for Physical and Aging Tests. Samples of jacketed cable for the unaged and aged physical tests shall be selected in accordance with Table 6-5. If vulcanization of jackets is necessary, samples shall be taken after vulcanization but prior to the application of all coverings except those applied over the jacket before it is vulcanized. No tests shall be performed on jackets less than 30 mils (0.76 mm) in thickness. ▲

6.4.6 Number of Test Specimens. From each of the samples selected in accordance with 6.4.4 and 6.4.5, test specimens shall be prepared in accordance with Table 6-6.

Table 6-6

	Total Number of Test Specimens
For determination of unaged properties	
Tensile strength, tensile stress, and ultimate elongation	3†
Permanent set	3†
Tear	6
For accelerated aging tests	
Air pressure heat or oxygen pressure	3†
Air oven	3†
For oil immersion	3†
Heat shock	1*
Heat distortion	3†
Cold bend	1*
Environmental cracking	3†
Absorption coefficient	3†
Flame test ▲	1*
Stripping	1*

*For the heat-shock, cold-bend, flame, and stripping tests, only one specimen shall be tested. ▲

†One test specimen out of three shall be tested and the other two specimens held in reserve, except that when only one sample is selected in accordance with 6.4.4 and 6.4.5, all three test specimens shall be tested and the average of the results reported.

6.4.7 Size of Specimens. The test specimens shall be prepared using either ASTM D412 Die B or E with specimen length not less than 6 inches (152 mm) or ASTM D412 Die C or D with specimen length not less than 4.5 inches (114 mm).

In the case of wire and cable smaller than size 6 AWG having an insulation thickness of 90 mils (2.29 mm) or less, the test specimen shall be permitted to be the entire section of the insulation. When the full cross-section is used, the specimens shall not be cut longitudinally. In the case of wire and cable size 6 AWG and larger, or in the case of wire and cable smaller than size 6 AWG having an insulation thickness greater than 90 mils (2.29 mm), specimens rectangular in section with a cross-section not greater than 0.025 square inch (16 mm²) shall be cut from the insulation. In extreme cases, it may be necessary to use a segmental specimen. (This sentence is approved as Authorized Engineering Information.)

Specimens for test on jacket compounds ahll be taken from the completed wire or cable and cut parallel to the axis of the wire or cable. The test specimen shall be a segment cut with a sharp knife, or a shaped specimen cut out with a die, and shall have a cross-sectional area not greater than 0.025 square inch (16 mm²) after irregularities, corrugations, and reinforcing cores or wires have been removed.

6.4.8 Preparation of Specimens of Insulation and Jacket. The test specimens shall have no surface incisions and shall be as free as possible from other imperfections. Where necessary, surface irregularities such as corrugations due to stranding, etc., shall be removed so that the test specimen will be smooth and of uniform thickness.

6.4.9 Specimens with Thin Jackets Vulcanized to Insulation. In the case of wires or cables having a thin jacket vulcanized directly to the insulation, die-cut specimens of the jacket and insulation shall be prepared. The jacket shall be separated from the insulation by slitting the covering through to the conductor and pulling the jacket and insulation apart by means of pliers.

This procedure may sometimes be facilitated by immersing the sample in hot water for a few minutes just prior to pulling off the jackets.**

If the jacket cannot be removed, specimens shall be prepared by buffing. The buffing apparatus for this operation shall be equipped with a cylindrical table arranged so that it can be advanced very gradually.

▲ Editorially revised.

**This sentence is approved by NEMA as Authorized Engineering Information.

Copyright National Electrical Manufacturers Association
Provided by IHS under license with NEMA
No reproduction or networking permitted without license from IHS

Not for Resale

4114

The conductor shall be removed from two short lengths of wire by slitting the covering. One length of covering shall be stretched into the clamps of the buffing apparatus so that it lies flat, with the jacket toward the wheel. The jacket shall be buffed off, with due care not to buff any further than necessary. The process shall be repeated with the other length of covering, except that the insulation shall be buffed off. Die-cut specimens shall be prepared from the buffed pieces after they have been allowed to recover for at least 30 minutes.

In the case of specimens from small wires, it may be necessary to use a die having a constricted portion $^1/_8$ inch (3.18 mm) wide.*

Jackets less than 30 mils (0.76 mm) thick shall not be tested.

6.4.10 Specimen for the Tear Test. The specimen for the tear test shall be cut with a sharp knife or die. After irregularities, corrugations, and reinforcing cords or wires have been removed, the test specimen shall have the dimensions shown in Figure 6-1. The test specimen shall not be more than 150 mils (3.81 mm) thick and not less than 40 mils (1.02 mm) thick. The specimen shall be split longitudinally with a new razor blade to a point 150 mils (3.81 mm) from the wider end.

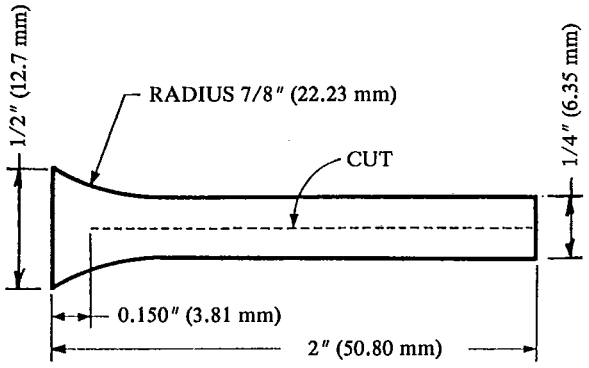

Fig. 6-1. Test Specimen for Tear Test

6.4.11 Specimen for Accelerated Aging Test. Samples shall be taken after vulcanization and prior to the application of any covering except those applied before vulcanization. Tests shall be made not earlier than 24 hours nor later than 60 days after vulcanization. Specimens shall not be heated, immersed in water, nor subjected to any mechanical or chemical treatment not specifically described in this standard. Specimens for accelerated aging tests having cable tape applied prior to vulcanization shall be aged with such tape removed.

6.4.12 Calculation of Area of Test Specimens

6.4.12.1 Where the total cross-section of the insulation is used, the area shall be taken as the difference between the area of the circle whose diameter is the average outside diameter of the insulation and the area of the conductor. The area of a stranded conductor shall be calculated from its maximum diameter.

6.4.12.2 Where a slice cut from the insulation by a knife held tangent to the wire is used and when the cross-section of the slice is the cross-section of a segment of a circle, the area shall be calculated as that of the segment of a circle whose diameter is that of the insulation. The height of the segment is the wall of insulation on the side from which the slice is taken.

When the cross-section of the slice is not a segment of a circle, the area shall be calculated from a direct measurement of the volume or from the specific gravity and the weight of a known length of the specimen having a uniform cross-section.

The values may be obtained from a table giving the areas of segments of a unit circle for the ratio of the height of the segment to the diameter of the circle.*

6.4.12.3 When the conductor is large and the insulation thin and when a portion of a sector of a circle has to be taken, the area shall be calculated as the thickness times the width.

This applies either to a straight test piece or to one stamped out with a die and assumes that corrugations have been removed.*

6.4.12.4 When the conductor is large and the insulation thick and when a portion of a sector of a circle has to be taken, the area shall be calculated as the proportional part of the area of the total cross-section.

6.4.12.5 The dimensions of specimens to be aged shall be determined before the aging test.

6.4.13 Physical Test Procedures (See 6.4 for Test Samples and Specimens)

6.4.13.1 *Test Temperature.* Physical tests shall be made at a room temperature not less than 20°C (68° F) nor more than 28°C (82.4°F). The test specimens shall be kept at room temperature for not less than 30 minutes prior to the test.

* This sentence is approved by NEMA as Authorized Engineering Information.

Copyright National Electrical Manufacturers Association
Provided by IHS under license with NEMA
No reproduction or networking permitted without license from IHS

Not for Resale

6.4.13.2 *Type of Testing Machine.* The testing machine shall be in accordance with 6.1 of ASTM D412.

▲ **6.4.13.3** *Tensile Strength Test.* The tensile strength test shall be made with specimens prepared in accordance with 6.4.6 and 6.4.7. The length of all of the specimens for the test shall be equal. Gauge marks shall be 2 inches (51 mm) when using 6 inch (152 mm) specimens and 1 inch (25 mm) apart when using 4.5 inch (114 mm) specimens except that 1 inch (25 mm) gauge marks shall be used for polyethylene regardless of specimen length. Specimens shall be placed in the jaws of the testing machine with a maximum distance between jaws of 4 inches (102 mm) except 2.5 inches (63.5 mm) for polyethylene. The specimen shall be stretched at the rate of 20 inches (508 mm) per minute jaw speed until it breaks.

The tensile and elongation determinations for compounds for which the compound manufacturer certifies that the base resin content is more than 50 percent by weight of high density polyethylene (having a density of 0.926 Mg/m^3 or greater) or total base polyethylene resin content (having a density of 0.926 Mg/m^3 or greater), shall be permitted to be tested at a jaw separation rate of 2 inches per minute (51 mm per minute) as an alternate to 20 inches per minute (508 mm per minute).

Specimens shall break between the gauge marks and the tensile strength shall be calculated on the area of the unstretched specimen. Specimen length, gauge mark distance, and jaw speed shall be recorded with the results.

6.4.13.4 *Set Test.* The set test shall be made on an unstretched test specimen having a length of not less than 6 inches (152 mm) and marked with gauge marks 2 inches (50.8 mm) apart. The specimens shall be placed in the jaws of the testing machine with a maximum distance between jaws of 4 inches (102 mm) and shall be stretched at the rate of 20 inches (508 mm) per minute (jaw speed) until the gauge marks are 6 inches (152 mm) apart. The test specimen shall be held in the stretched position for 5 seconds, and the distance between gauge marks shall be determined 1 minute after the release of tension. The set is the difference between this distance and the original 2-inch (50.8-mm) gauge length, expressed as a percentage.

6.4.13.5 *Elongation Test.* Elongation at rupture shall be determined simultaneously with the test for tensile strength and on the same specimen.

The elongation shall be taken as the distance between the gauge marks at rupture less the original gauge length marked on the specimen. The percentage of elongation at rupture is the elongation divided by the original gauge length and multiplied by 100. Specimen length, gauge mark distance, and jaw speed shall be reported with the results.

6.4.13.6 *Tensile Stress Test.* The tensile stress test shall be made in conjunction with the tensile strength test by recording the load when the gauge marks indicate that the specimen is at its prescribed elongation. The tensile stress shall be calculated on the area of the unstretched specimen.

6.4.13.7 *Tear Test.* The tear test shall be made on a minimum of six individual test specimens prepared in accordance with 6.4.10. The two halves of the split end of the test specimen shall be placed in the jaws of the testing machine and the jaws separated at the rate of 20 inches (508 mm) per minute. The tear resistance shall be determined by dividing the load in pounds required to tear the section by the thickness of the test specimen in inches. The average of the results obtained on all test specimens shall be considered as the value of the tear resistance.

6.4.13.8 *Cold-bend Test.* The test specimen of the insulated conductor without any further covering shall be subjected to the specified temperature for 1 hour and then bent 180 degrees around a mandrel having a diameter of eight times the diameter of the insulated conductor immediately upon its removal from the cooling chamber. The bend shall be made at a uniform rate, and the time required shall not exceed 1 minute.

6.4.14 Aging Test

6.4.14.1 *Aging Test Specimens.* Test specimens of similar size and shape shall be prepared from each sample selected in accordance with 6.4.4 and 6.4.5, three for the determination of the initial or unaged properties, and three for each aging test required for the grade of insulation or jacket being tested. One specimen of each three shall be tested and the other two held as spares except that, where only one sample is selected, all three specimens shall be tested and the average of the results reported.

In the case of wire and cable smaller than 6 AWG having an insulation thickness less than 90 mils (2.29 mm), the insulation shall be subjected to the aging condition with the conductor removed and each end of the specimen suitably plugged.

In the case of wire and cable 6 AWG and larger or with an insulation thickness of 90 mils (2.29 mm) or greater, samples shall be cut from the insulation with a cross-section not greater than 0.025 square inch (16 mm^2).

Copyright National Electrical Manufacturers Association
Provided by IHS under license with NEMA
No reproduction or networking permitted without license from IHS
Not for Resale

Die-cut specimens shall be smoothed before being subjected to the accelerated aging tests wherever the thickness of the specimen will be 90 mils (2.29 mm) or greater before smoothing.

Simultaneous aging of different compounds should be avoided. For example, high-sulfur compounds should not be aged with low-sulfur compounds and those containing antioxidants should not be aged with those containing no antioxidant. Some migration is known to occur.*

* This paragraph is approved by NEMA as Authorized Engineering Information.

The test specimens shall be suspended vertically in such a manner that they are not in contact with each other or with the sides of the oven. ▲

The aged specimens shall have a rest period of not less than 16 hours nor more than 96 hours between the completion of the aging tests and the determination of physical properties. Physical tests on both the aged and unaged specimens shall be made at approximately the same time.

6.4.14.2 *Oxygen Pressure Test.* The test specimens shall be heated in an atmosphere of oxygen at a pressure of 290 to 310 pounds per square inch (0.204 to 0.218 kgf/mm²) at the temperature and for the period specified for the grade of insulation or jacket being tested. The weight of the insulation or jacket in the bomb shall be not more than 2 grams of actual rubber or oxidizable substance per cubic inch of bomb space. The bomb pressure shall be reduced at a uniform rate requiring at least 5 minutes to reach atmospheric pressure at which time the specimens shall be removed. The bomb temperature shall be recorded automatically on a chart, and controlled to ±1°C.

6.4.14.3 *Air Oven Test.* The test specimens shall be heated at the required temperature for the specified period in an oven having forced circulation of fresh air. The oven temperature shall be recorded automatically on a chart, and controlled to ±1°C.

6.4.14.4 *Air Pressure Heat Test.* The test specimens shall be heated in air at a pressure of 77 to 83 pounds per square inch (0.054 to 0.058 kgf/mm²) at the temperature and for the period specified. This test shall be conducted in a steam-jacketed bomb or other suitable and uniformly heated chamber. The bomb shall be so regulated that the temperature inside the chamber shall reach the test temperature within 15 minutes after inserting the test specimens. The air shall be substantially free from oil and moisture. The weight of the actual rubber or oxidizable substance in the bomb shall be not more than 2 grams per cubic inch of bomb space. The bomb pressure shall be reduced at a uniform rate, requiring at least 5 minutes to reach atmospheric pressure, at which time the specimens shall be removed. The bomb temperature shall be recorded automatically on a chart, and controlled to ±1°C.

6.4.14.5 *Oil Immersion Test for Cross-Linked Jacket.* The test specimens shall be completely immersed in ASTM Oil No. 2, described in Table I of ASTM D 471, at 121°C ± 1°C for 18 hours. The specimens shall then be removed from the oil, blotted lightly to remove excess oil, and suspended in air at room temperature for 4, ± ½, hours, after which they shall be tested for tensile strength and elongation.

The calculations for tensile strength shall be based on the cross-sectional area of the specimen obtained before immersion in oil. Likewise, the elongation shall be based on the gauge marks applied to the specimen before immersion in the oil.

6.4.14.6 *Oil Immersion Test for Thermoplastic Jackets.* The test specimens shall be immersed in ASTM Oil No. 2, described in Table I of ASTM D471, at the specified temperature for the specified time. At the end of this time, the specimens shall be removed from the oil, blotted to remove excess oil and allowed to rest at room temperature for a period of 16 to 96 hours. The tensile strength and elongation of the specimens shall then be determined in accordance with 6.4.13 at the same time that the original properties are determined.

The calculations for tensile strength shall be based on the cross-sectional area of the specimen obtained before immersion in oil. Likewise, the elongation shall be based on the gauge marks applied to the specimen before immersion in the oil.

6.4.15 Physical Tests for Semiconducting Material Intended for Extrusion

6.4.15.1 *Test Sample.* One test sample shall be molded from each lot of semiconducting material intended for extrusion on the cable.

6.4.15.2 *Test Specimens.* For each test three test specimens, each approximately 6 inches (152 mm) long and not greater than 0.025 square inch (16 square mm) in cross-section, shall be cut out of the test sample with a die. All three test specimens shall be tested and the results averaged.

6.4.15.3 *Elongation.* This test shall be conducted in accordance with 6.4.13 and 6.4.14.

6.4.15.4 *Brittleness Test.* This test shall be

Copyright National Electrical Manufacturers Association
Provided by IHS under license with NEMA
No reproduction or networking permitted without license from IHS
Not for Resale

conducted in accordance with ASTM D 746, using Specimen A.

6.4.16 Retests for Physical and Aging Properties and Thickness. If any test specimen fails to meet the requirements of any test, either before or after aging, that test shall be repeated on two additional specimens taken from the same sample. When the tear resistance of the first set of six specimens fails to meet the requirements, two additional sets of test specimens shall be tested. Failure of either of the additional specimens shall indicate failure of the sample to conform to this standard.

If the thickness of the insulation or of the jacket of any coil or reel is found to be less than the specified value, that coil or reel shall be considered as not conforming to this standard, and a thickness measurement on each of the remaining coils or reels shall be made.

When ten or more samples are selected from any single lot, all coils or reels shall be considered as not conforming to this standard if more than 10 percent of the samples fail to meet the requirements for physical and aging properties and thickness. If 10 percent or less fail, each coil or reel shall be tested and shall be judged upon the results of such individual tests. Where the number of samples selected in any single lot is less than ten, all coils or reels shall be considered as not conforming to this standard if more than 20 percent of the samples fail. If 20 percent or less fail, each coil, reel, or length shall be tested and shall be judged upon the results of such individual tests.

6.5 Short-time Dielectric Strength Test on Insulated Conductors

6.5.1 This test is applicable only to power cable rated 5001 volts and above. The test sample shall be taken either from the cable in process or from the completed cable. One test sample (see 3.14 and 3.15) shall be taken for the first 5000 to 20,000 feet (1524 to 6096 meters) of each cable construction and one additional sample for each additional 100,000 feet (30,480 meters). The gross length of each sample shall be 17 feet (5.18 meters) for cables rated 15,000 volts and below and 22 feet (6.71 meters) for cables rated above 15,000 volts.

6.5.2 Ten feet (3.05 meters) of the test sample, with any outer coverings removed except tape in which the insulation is vulcanized, shall be immersed in water at room temperature for at least 1 hour prior to making the test.

6.5.3 After the sample has been immersed for at least 1 hour, it shall withstand for 5 minutes a test voltage which is twice the test voltage given in Table 3-2.

The initially applied voltage shall be not greater than the rated voltage, and the rate of increase shall be approximately uniform and not over 100 percent in 10 seconds nor less than 100 percent in 60 seconds.

6.5.4 The test shall be made on the same sample used in 6.5.1. Starting with the voltage at which the test described in 6.5.3 was made, the voltage shall be raised in steps of approximately 20 percent of the immediately preceding voltage until failure occurs, the voltage to be kept constant at each step for 5 minutes.

Note—The test described in 6.5.4 is to be used only as an information test.*

* This note is approved by NEMA as Authorized Engineering Information.

6.6 Cold Bending and Long-time Dielectric Strength Test

6.6.1 This test is applicable only to power cable rated 5001 volts and above. The test sample shall be taken from the completed cable. One test sample (see 3.14 and 3.15) shall be taken from the first 5000 to 20,000 feet (1524 to 6096 meters) of each cable construction and one additional sample for each additional 100,000 feet (30,480 meters). The gross length of each sample shall be 13 feet (3.96 meters) for cables rated 15,000 volts and below and 17 feet (5.18 meters) for cables rated above 15,000 volts.

6.6.2 Ten feet (3.05 meters) of the test sample shall be subjected to a temperature of minus 10°C for not less than 2 hours, and then immediately bent 180 degrees around a cylindrical mandrel. It shall then be straightened and bent 180 degrees around the mandrel in the opposite direction. The cable shall be so held during the bending operations that it cannot revolve around its own axis.

6.6.3 The diameter of the mandrel shall be in accordance with Table 6-7.

Table 6-7

Thickness of Conductor Insulation		Mandrel Diameter as a Multiple of Outside Diameter of the Cable	
		Up through 500 kcmil▲	Over 500 kcmil▲
mils	mm		
190	4.83	8	10
205–310	5.21–7.87	10	12
330 and over	8.38 and over	12	12

▲ Editorially revised.

Copyright National Electrical Manufacturers Association
Provided by IHS under license with NEMA
No reproduction or networking permitted without license from IHS
Not for Resale

6.6.4 Immediately following the bending test and while still bent, the cable shall withstand the applicable alternating-current test voltage given in Table 3-2 continuously for 2 hours between each conductor and all of the other conductors and also between each conductor and an enclosing grounded surface.

Three-conductor cables shall be tested with grounded three-phase voltage or with single-phase voltage. For shielded cables, the shields shall be grounded. Nonshielded cables shall be tested in a grounded water bath or in a foil.

6.7 Capacity and Power Factor Tests

6.7.1 This test is applicable only to power cables rated 5001 volts and above. The test sample shall be taken from cable in the preliminary stage. One test sample shall be taken for the first 5000 to 20,000 feet (1524 to 6096 meters) of each cable construction and one additional sample for each additional 100,000 feet (30,480 meters). The gross length of each sample shall be 13 feet (3.96 meters) for cables rated 15,000 volts and less and 17 feet (5.18 meters) for cables rated above 15,000 volts.

6.7.2 The capacity and power factor shall be measured on suitable 60-hertz equipment after the test sample has been immersed in water at room temperature for at least 24 hours. The measurements shall be made at the rated voltage to ground of the cable under test.

6.8 Ozone Resisting Test

6.8.1 The samples shall be taken from the completed cable. One sample (see 3.14, 3.15, and 3.17) shall be taken from the first 5000 to 20000 feet (1524 to 6096 meters) of each cable construction and one additional sample for each additional 100000 feet (30480 meters). The gross length of each sample shall be 7½ feet (2.29 meters) for cables rated 5000 volts and less and 10 feet (3.05 meters) for cables rated above 5000 volts. ▲

6.8.2 Test Apparatus. Test apparatus shall consist of the following.

(*a*) A device for generating a controlled amount of ozone.
(*b*) A means for circulating ozonized air under controlled conditions of humidity and temperature through a chamber containing the specimens to be tested.
(*c*) A means for determining the percentage of ozone concentration (see 6.8.5).

The test apparatus shall be in accordance with Figure 6-2. Air flows from an air pump or compressed air supply through a series of chambers as indicated.

The acid drier consists of two 500-ml gas washing bottles filled to 30 percent of capacity with sulphuric acid (H_2SO_4) having a specific gravity of 1.84. In series with this is a second drier containing anhydrous calcium chloride or anhydrous calcium sulfate, and a U-tube hygrometer containing a small quantity of anhydrous copper sulfate which is used as an indicator of moisture. The rate of air flow is indicated by a calibrated flow meter having a capacity of at least 25 cubic feet (0.708 cubic meters) per hour.

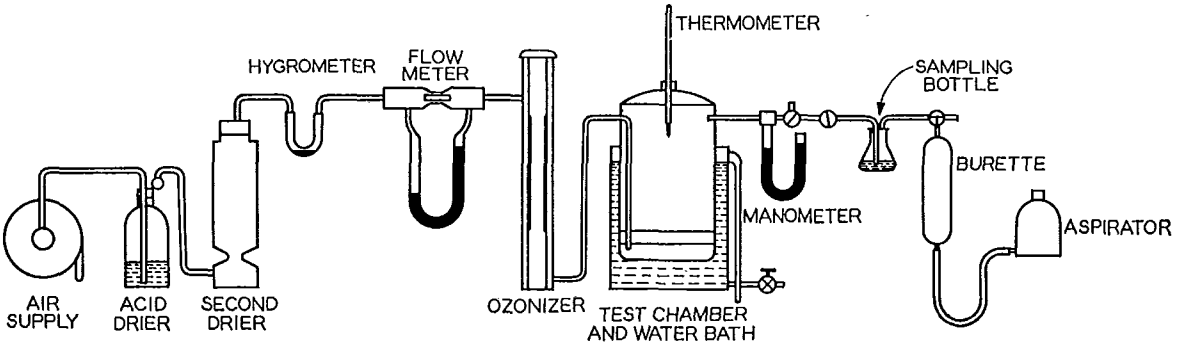

Note—If the acid in the acid drier should carry over into the second drier, a scrubber bottle may be inserted between the first and second driers.

Fig. 6-2 Typical Test Apparatus for Ozone Resisting Test

▲ Editorially revised.

Copyright National Electrical Manufacturers Association
Provided by IHS under license with NEMA
No reproduction or networking permitted without license from IHS

Not for Resale

Ozonization of the air is accomplished in a generator consisting of a pair of concentric electrodes, separated by a thin glass dielectric, between which voltage may be applied. This generator may be conveniently supplied by a potential transformer which is equipped with a variable voltage control rated between 20 and 30 kilovolts.

The test chamber shall be of a material which is not attacked by ozone, and should be just large enough to accommodate the largest test specimens to be tested. Excessive size results in greater delay in obtaining the desired ozone concentration. A chamber 18 to 20 inches (457 to 508 mm) in length and having a capacity of 2000 to 5000 cubic inches (32,800 to 81,900 cubic centimeters) will generally be required. A convenient form of test chamber is a glass jar having a full-size cover. This permits easy access to the interior and the inspection of specimens without opening the chamber during test.

Near the bottom of the test chamber a filter consisting of a layer of loose mineral wool held between two perforated grills is placed. The ozonized air is led from the generator to the space below this filter. Temperature control may be secured by keeping the test apparatus in an air conditioned room or by partially immersing the test chamber in a water bath, which may be connected to a hot- and cold-water system or provided with electric heaters which are thermostatically controlled. A thermometer is inserted into the cover of the test chamber, with its bulb as near to the test specimens as practicable.

Discharge from the test chamber is accomplished by a double cock arrangement, one acting as a direct discharge into the outside atmosphere and the other, when normally closed, acting as a bypass test cock. A manometer is inserted in the outlet pipe to indicate pressure in the test chamber.

6.8.3 Test Specimens

6.8.3.1 Two test specimens shall be selected from the accessible end of the reel or coil to be tested. Where protective coverings are applied, such coverings shall be removed when they are nonadherent to the insulation. When tapes or jackets are applied directly to the insulation prior to vulcanization, left in place during vulcanization, and are consequently adherent to the insulation in the completed cable, they shall not be removed. Such adherent coverings, regardless of the type of ozone-resisting insulation used on the conductor, shall show no cracks after exposure for 3 hours to an ozone concentration of not less than 0.010 nor more than 0.015 percent by volume.

6.8.3.2 Each test specimen shall be free from mechanical defects, such as cuts, dents, tears, loose threads, etc. One specimen shall be bent in the direction and plane of the existing curvature of the cable around a mandrel and through the specified angle in accordance with 6.8.3.3 and 6.8.3.4. The other specimen shall be bent similarly but in the opposite direction and plane of the existing curvature.

6.8.3.3 Specimens shall be bent, without twisting, at room temperature but at not less than 20°C (68°F) around a brass, aluminum or suitably treated wooden mandrel having the diameter shown in Table 6-8.

6.8.3.4 The specimen shall be bent in accordance with Figure 6-3 and shall be bound with twine or tape where the ends cross. If the specimen is too rigid to permit crossing of the ends, it may be bent in the form of a U and tied so that at least a 180-degree bend of the proper diameter is obtained.

Table 6-8

Outside Diameter of Individual Conductor		Mandrel Diameter as a Multiple of the Outside Diameter of the Individual Conductor
inches	mm	
Less than 0.500	Less than 12.7	4
0.500 but less than 0.750	12.7 but less than 19.0	5
0.750 but less than 1.250	19.0 but less than 31.8	6
1.250 but less than 1.750	31.8 but less than 44.4	8
1.750 and greater	44.4 and greater	10

Copyright National Electrical Manufacturers Association
Provided by IHS under license with NEMA
No reproduction or networking permitted without license from IHS
Not for Resale

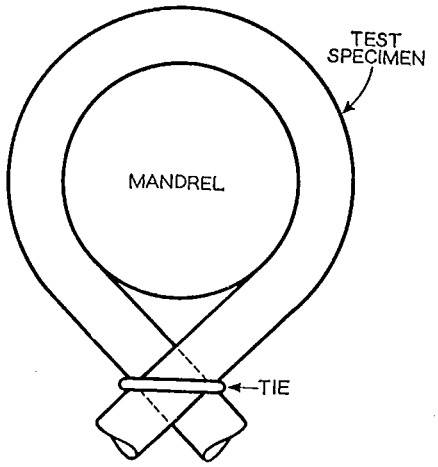

Fig. 6-3 Specimen Bent around Mandrel for Ozone Resisting Test

6.8.3.5 The surface of each specimen shall be wiped with a clean cloth to remove dirt or moisture. The bent specimens on their mandrels shall be placed in a desiccator for 30 to 45 minutes to remove surface moisture and until they are placed in the test chamber.

6.8.4 Test Procedure

6.8.4.1 Air shall be circulated through the test apparatus at a constant rate of flow for at least 15 minutes prior to bending the specimens. The flow shall be between 10 and 20 cubic feet (0.283 and 0.566 cubic meters) per hour. The manometer shall indicate a pressure of approximately ½ inch (12.7 mm) of water above atmospheric pressure in the test chamber. After ozone has been generated for at least 15 minutes, the percentage of ozone concentration shall be checked in accordance with 6.8.5. The voltage of the ozone generator or the rate of flow of air shall then be regulated to provide the ozone concentration specified for the type of cable being tested. The temperature of the air in the test chamber shall be 25°C ± 2°C. When constant conditions are obtained, the test apparatus shall be operated in equilibrium for at least 45 minutes. The test specimens shall be placed in the test chamber, taking care not to handle the test section. The specimens shall be supported in an approximately vertical plane midway between the top and bottom, with the free ends down to but not touching the bottom.

6.8.4.2 After 3 hours, the test specimens shall be removed from the chamber and examined by the unaided eye for cracks in the bent portion. Cracks occurring on the 180-degree sector including the tie, that is, where the specimen is not curved to conform to the mandrel, shall be disregarded.

6.8.5 Determination of Ozone Concentration

6.8.5.1 *Chemical Analysis*

6.8.5.1.1 Starch Indicator Solution. Stir 1 gram of soluble starch into 40 milliliters of cold water and heat to boiling, stirring constantly, until starch is thoroughly dissolved. Dilute with cold water to about 200 milliliters, and add 2 grams of crystallized zinc chloride. Let the solution settle and then pour off the supernatant liquid for use. Renew every 2 or 3 days. A fresh solution of 1 gram of soluble starch in 100 milliliters of boiling water may also be used. When using these starch solutions as an indicator, add a few drops of acetic acid (10 percent) to the solution being titrated.

6.8.5.1.2 Standard Iodine Solution. Place 2 grams of potassium iodide (KI) and 10 milliliters of water in a weighing tube, and weigh the tube and solution. Add iodine directly to the solution in the weighing tube on the balance pan until the total iodine in solution is about 0.1 gram. Accurately weigh the solution with the added iodine. Determine the amount of iodine added to the solution. Remove the weighing tube and pour the solution into a beaker. Wash the weighing tube held over the beaker with distilled water and pour the solution from the beaker into a volumetric flask. Rinse the beaker into a 1000-milliliter volumetric flask with distilled water, and dilute the solution in the flask to 1 liter. This solution is fairly stable if kept in a cool, dark place in a well-stoppered brown bottle.

6.8.5.1.3 Sodium Thiosulfate Solution. Prepare a sodium thiosulfate ($Na_2S_2O_3$) solution of approximately the same strength as the standard iodine solution by placing about 0.24 gram of $Na_2S_2O_3.5H_2O$ in a 1000-milliliter volumetric flask, and dilute to 1 liter. Since this solution gradually loses its strength, standardize it against the standard iodine solution on the day tests are run. The method for calculating the strength of the $Na_2S_2O_3$ solution is described in 6.8.5.1.8.

Copyright National Electrical Manufacturers Association
Provided by IHS under license with NEMA
No reproduction or networking permitted without license from IHS

Not for Resale

6.8.5.1.4 Potassium Iodide Solution. Dissolve about 20 grams of pure KI in 2 liters of water.

6.8.5.1.5 Acetic Acid (10 per cent).

6.8.5.1.6 Collection of Sample. Place a 100-milliliter portion of KI solution (1 percent), slightly acidified by a few drops of acetic acid, in the sampling bottle and connect the latter to the sampling cock and gas burette as shown in Figure 6-2. Open the two-way stopcock on the burette to the air and fill the burette to the mark with water by lifting the aspirator bottle. Close the stopcock to the air and open it to the sampling bottle, and then open the sampling cock on the test chamber. Lower the aspirator bottle until the burette is emptied. When this point is reached, 500 milliliters of gas will have bubbled through the KI solution. Then close the stopcocks and withdraw the bottle for titration.

6.8.5.1.7 Analysis of Sample. Add to the solution in the bottle a few drops of freshly prepared starch solution as an indicator, and then titrate with the standardized $Na_2S_2O_3$ solution.

6.8.5.1.8 Calculations. Sodium Thiosulfate Solution. Calculate the strength of the $Na_2S_2O_3$ solution as follows:

$$E = \frac{F \times C}{S}$$

where

E—Iodine equivalence of $Na_2S_2O_3$ expressed as milligrams of iodine per milliliter of $Na_2S_2O_3$.
F—Number of milliliters of the iodine solution.
C—Concentration of iodine in milligrams per milliliter.
S—Number of milliliters of $Na_2S_2O_3$ used to titrate the solution.

Ozone. Since 1 milligram of iodine is equivalent to 0.1 milliliter of ozone at room temperature and pressure (within the accuracy of this method of analysis at average room temperature and pressure), the ozone may be calculated as follows:

$$O = E \times 0.1$$

where

O—Number of milliliters of ozone at room temperature and pressure equivalent to 1 ml of $Na_2S_2O_3$ solution used.
E—Iodine equivalent of $Na_2S_2O_3$ expressed as milligrams of iodine per milliliter of $Na_2S_2O_3$.

then

$$\text{Percentage of ozone} = \frac{S \times O}{M} \times 100$$

where

S—Number of milliliters of $Na_2S_2O_3$ used to titrate the solution.
O—Number of milliliters of ozone at room temperature and pressure equivalent to 1 ml of $Na_2S_2O_3$ solution used.
M—Number of milliliters of the sample collected.

6.8.5.2 *Direct Measurement with an Ozonometer.* As an alternative to the chemical analysis described in 6.8.5.1, the ozone concentration may be measured directly with an ozonometer. This test method is based on the absorption of 2537 A (Angstrom unit) radiation by ozone. The equipment shall be composed of a source of 2537 A radiation and a photoelectric cell located on the opposite sides of a measuring cell through which the ozone atmosphere to be measured is passed. The amount of 2537 A radiation that is available for activating the photoelectric cell is dependent on the concentration of ozone in the measuring chamber. The current generated in the photoelectric cell is amplified sufficiently to be read directly on a sensitive microammeter. The schematic arrangement of this apparatus shall be in accordance with Figure 6-4. The microammeter shall be marked to read directly in percentage of ozone. The calibration of this instrument shall be made by comparison with results obtained with the chemical method given in 6.8.5.1. The advantage in using this method is that, after a calibration is obtained, the ozone concentration is continuously readable on the microammeter without drawing a sample from the test chamber and thus upsetting equilibrium.

Copyright National Electrical Manufacturers Association
Provided by IHS under license with NEMA
No reproduction or networking permitted without license from IHS
Not for Resale

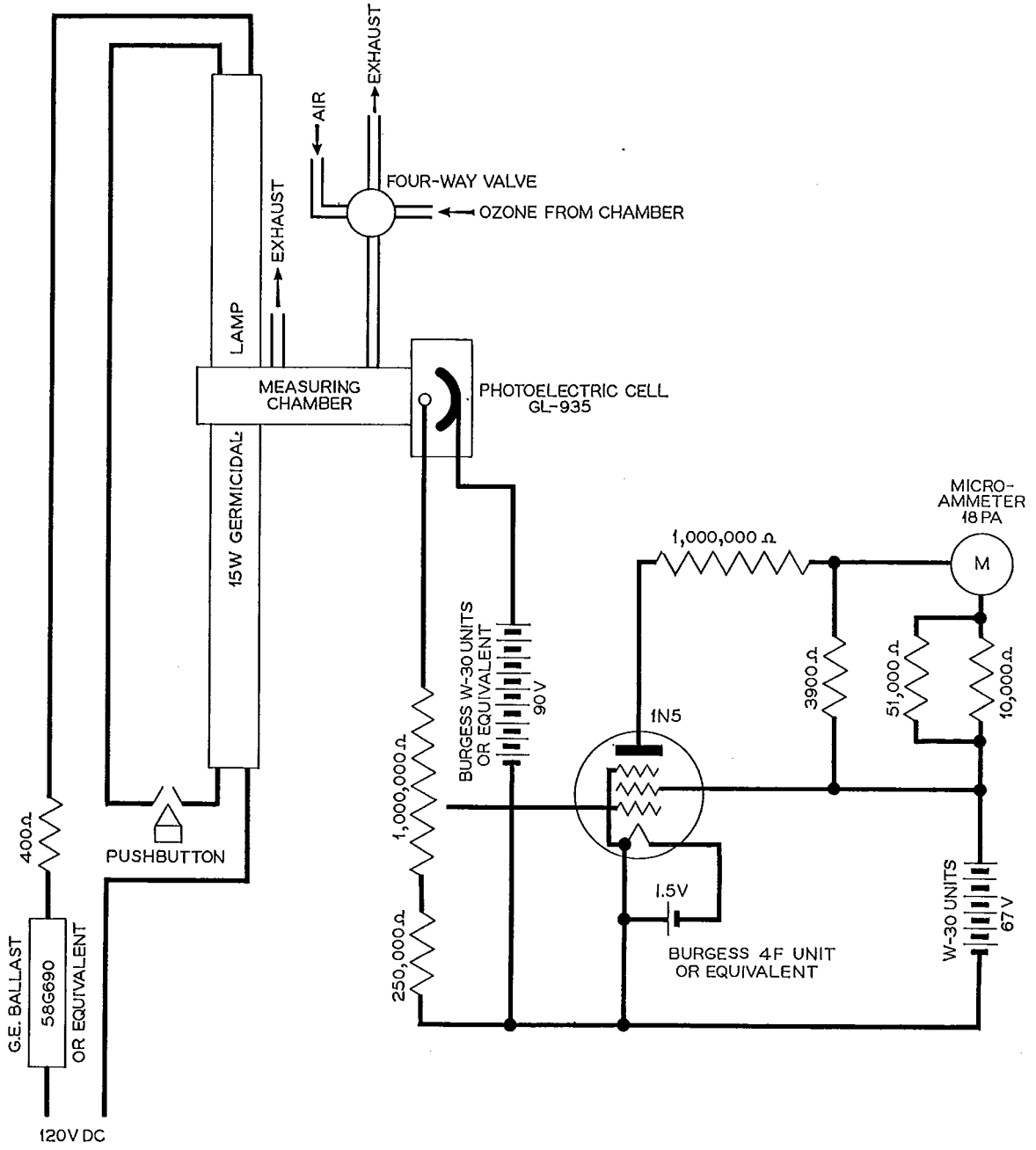

Note—Resistor values in microammeter shunt will vary with the meter used and with the concentration scale desired.

Fig. 6-4 Electronic Ozonometer

Copyright National Electrical Manufacturers Association
Provided by IHS under license with NEMA
No reproduction or networking permitted without license from IHS

Not for Resale

6.9 Accelerated Water Absorption Tests

6.9.1 The test samples shall be taken from cable in the preliminary stage. One test sample for each test shall be taken for the first 5000 to 20,000 feet (1524 to 6096 meters) of each cable construction and one additional sample for each additional 100,000 feet (30,480 meters). The gross length of each sample required by the electrical method shall be 15 feet (4.57 meters) and, by the gravimetric method, 11 inches (279 mm).

These tests shall not be made on cables which have a nonconductive separator between the conductor and insulation, insulations less than 45 mils (1.14 mm) thick, and insulations having a covering which cannot be removed without damage to the insulation.

6.9.2 Electrical Method (EM-60). A 15-foot (4.57-meter) test specimen of the insulated conductor shall be taken after vulcanization and prior to the application of any coverings except the tape which may have been applied before vulcanization. Such tapes shall be removed before the test is made. Not earlier than 48 hours after vulcanization, the specimen shall be immersed in water.

The middle 10 feet (3.05 meters) of the test specimen shall be immersed in tap water which is maintained at 50°C* ± 1°C for a period of 14 days, keeping the 2½ foot (0.76-meter) portion of each end above water as leakage insulation. A tightly fitting cover shall be placed directly above the water surface, with suitable water-tight bushings for the ends of the specimen. The water level shall be kept constant.

The capacitance of the insulation shall be determined at an average stress of 80 volts per mil at approximately 60 hertz after 1, 7 and 14 days' immersion. The power factor of the insulation at average stresses of 80 and 40 volts per mil shall be determined after 1 and 14 days' immersion. The increase in capacitance from 1 to 14 days and from 7 to 14 days shall be expressed as a percentage of the 1- and 7-day values, respectively. The power factor shall be expressed to the nearest 0.1 percent.

* See Part 3 for compounds which are tested at other than 50°C.

Stability Factor. The stability factor is the difference between the percentage power factor at 80 and at 40 volts per mil after the test specimen has been immersed in water at 50°C* ± 1°C for the specified time. The alternate to stability factor is the 14-day stability factor minus the 1-day stability factor.

The dielectric constant (specific inductive capacity) of the insulation at 60 hertz shall be calculated as follows:

$$\text{Dielectric constant} = 13600\ C \log_{10} \frac{D}{d}$$

where

C—Capacitance in microfarads of the 10-foot (3.05-meter) section.
D—Diameter over the insulation.
d—Diameter under the insulation.

6.10 Thickness of Tapes

6.10.1 Compound-filled Tape. Compound-filled tape, when not bonded to the underlying material, shall be removed from no less than 6 inches (152 mm) of the insulated conductor or assembled core. The thickness of the tape shall be determined by means of a dial micrometer having a presser foot 0.25 inch (6.35 mm) ± 0.01 inch in diameter and exerting a total force of 3.0, ±0.1, ounces (85, ±3, grams), the load being applied by means of a weight. Five readings shall be taken at different points on the sample, and the average of these readings shall be taken as the thickness of the tape.

6.10.2 Metallic Shielding Tape or Steel Tape. Metallic shielding tape or steel tape shall be removed from no less than 6 inches (152 mm) of the insulated conductor or assembled core. The thickness of the tape shall be measured by means of a micrometer caliper having flat surfaces on both the anvil and the end of spindle and graduated to read directly at least to mils, and preferably to tenths of a mil. Five readings shall be taken at different points on the sample, and the average of these readings shall be taken as the thickness of the tape.

Copyright National Electrical Manufacturers Association
Provided by IHS under license with NEMA
No reproduction or networking permitted without license from IHS
Not for Resale

6.11 Measurements of Braids

6.11.1 The average diameter under the braid shall be measured with a suitable micrometer or diameter tape.

6.11.2 The number of carriers and the number of ends per carrier shall be determined by examination of the braid.

6.11.3 The number of picks per inch shall be determined on a 4-inch (102-mm) specimen, after wiping the outside of the braid with chloroform.

6.11.4 The angle of the braid shall be determined by the formula:

$$\text{Tangent of the angle} = \frac{2\pi P(D + T)}{C}$$

where

P—Picks per inch.
D—Diameter under braid in inches.
T—Thickness of braid in inches = 2t.

Copyright National Electrical Manufacturers Association
Provided by IHS under license with NEMA
No reproduction or networking permitted without license from IHS

 Not for Resale

t—Diameter of one end of cotton, in inches =

$$\frac{0.0279K}{\sqrt{S}}$$

S—Cotton size.
C—Number of carriers.
K—Cabling factor for plied yarns as follows:

2 ply—1.60
3 ply—2.00
4 ply—2.36

6.11.5 A specimen of braid approximately 2 inches (50.8 mm) long shall be carefully slit and removed from the completed cable and immersed in chloroform or some other suitable solvent for 5 minutes. The solvent shall be decanted and the operation repeated until the cotton is substantially free of saturating and finishing material. The specimen shall then be dried by pressing it between blotting papers. The specimen shall be measured by means of a dial micrometer having a presser foot 0.4 inch (10.2 mm) in diameter and exerting a weight on the sample of 50 grams. Five readings shall be taken at different points on the specimen, and the average of these readings shall be taken as the thickness of the braid. In the case of a double braid, each braid shall be removed and measured separately.

6.12 Determination of Yarn Size of Wraps. Not less than 20 square inches (129 square centimeters) of the covering shall be removed from the completed wire or cable in the form of a continuous ribbon, unbroken except for binder threads. The ends of this ribbon shall be cut off square and its length measured accurately.

This test specimen shall be folded into a suitable form and placed in the cup of an extraction apparatus. Extraction with a suitable solvent, such as freshly distilled carbon tetrachloride, shall be made until all saturating and finishing compounds are removed from the specimen and the solvent runs out of the siphon tube absolutely clear. The specimen shall then be removed from the extraction apparatus and dried to a constant weight in an oven at 70°C. The binder threads shall then be removed, the number of ends of yarn in the specimen counted and a final weight determined with the sample at room temperature.

If the results secured by the foregoing test method are not in accordance with the requirements, the sample shall be conditioned for at least 1 hour at 65, ± 2, percent relative humidity and 21°C ± 1°C before the final weight is determined.

The size of yarn, S, shall be determined from the formula:

$$S^* = \frac{0.015\ NLB}{Y}$$

where

N—Number of ends of yarn in the covering.
L—Length of specimen in inches.
B—Ply of cotton yarn.
Y—Weight of specimen in grams.

* If the numerical value of S as determined by the formula is not an integer, the nearest whole number shall be taken as the size of the yarn.

6.13 Braided Cables for Indoor Installations

6.13.1 Sampling of Cable for Tests

6.13.1.1 When tests are required, a sample of the length given in Table 6-9 shall be taken from any coil or reel length.

Table 6-9
Minimum Length of Samples

Quantity of Completed Cable Ordered		Size of Conductor, AWG	Nominal Overall Diameter of Cable		Minimum Length of Each Sample					
					Single Conductor				Multiple Conductor	
					600 Volts		Over 600 Volts		All Voltages	
feet	meters		inches	mm	cable feet	cable meters	cable feet	cable meters	cable feet	cable meters
50,000 or more	15,240 or more									
Each 50,000	Each 15,240	Any size	0.5 and less	12.70 and less	7	2.13	4	1.22	4	1.22
Each 50,000	Each 15,240	Less than 4/0	0.501–1.000	12.73–25.40	5	1.52	4	1.22	4	1.22
Each 50,000	Each 15,240	4/0 and over	0.501–1.000	12.73–25.40	6	1.83	5	1.52	5	1.52
Each 50,000	Each 15,240	Less than 4/0	1.001–1.500	25.43–38.10	7	2.13	6	1.83	6	1.83
Each 50,000	Each 15,240	4/0 and over	1.001–1.500	25.43–38.10	8	2.44	7	2.13	7	2.13
Each 50,000	Each 15,240	Any size	1.501–2.000	38.13–50.80	9	2.74	8	2.44	8	2.44

Copyright National Electrical Manufacturers Association
Provided by IHS under license with NEMA
No reproduction or networking permitted without license from IHS
Not for Resale

6.13.1.2 *Number and Length of Test Specimens.* From each of the samples selected in accordance with 6.13.1.1, test specimens shall be prepared as follows:

Test	Number of Test Specimens	Length of Test Specimens inches	Length of Test Specimens mm
Horizontal flame	1	10	254
Moisture and bending	1	24*	610

* For single-conductor 600-volt cable, the length of sample remaining after the removal of the test specimens for the horizontal flame and moisture tests shall be used for the bending test. For other than single-conductor 600-volt cable where the horizontal flame test is not required, the length remaining after the removal of the specimen for the moisture test shall be used for the bending test.

6.13.2 Horizontal Flame Test

6.13.2.1 *Test Apparatus.* The test apparatus shall consist of the following:

(*a*) Test chamber of sheet metal 12 inches (305 mm) wide, 14 inches (356 mm) deep and 24 inches (610 mm) high, which is open at the top and front, and which is provided with means for supporting the test specimen in a horizontal position.

(*b*) Tirrill burner having a nominal bore of 3/8 inch (9.5 mm) and a length of 4 inches (102 mm) above the primary air inlets.

(*c*) Gas—a supply of ordinary illuminating gas at normal pressure.

(*d*) Watch or clock with a hand which makes one complete revolution per minute.

6.13.2.2 *Test Procedure.* The test shall be made in a room which is generally free from drafts of air, although a ventilated hood may be used if air currents do not affect the flame. The test specimen shall be centered in a horizontal position on supports which are 8 inches (203 mm) apart. The height of the flame, with the burner vertical, shall be adjusted to 5 inches (127 mm), with an inner blue cone 1½ inches (38.1 mm) high. The burner, in a vertical position, shall be brought up to the specimen so that the inner blue cone just touches the underside of the specimen at a point midway between the supports. The flame shall be directed against the specimen for 30 seconds and then removed. During the test, as well as after the application of the flame, it shall be noted whether or not the area of the specimen supporting the flame extends outside of the area exposed to the flame. Also, the behavior and duration of the flaming of the specimen after the application of the test flame shall be noted.

6.13.3 Moisture and Bending Tests of Fibrous Coverings

6.13.3.1 *Test Apparatus.* The test apparatus shall consist of the following.

(*a*) Desiccator containing anhydrous calcium chloride.

(*b*) Set of mandrels having the diameters shown in Table 6-10.

(*c*) Balance, quick-damping and accurate to 10 milligrams.

Table 6-10
Diameter of Mandrel

Size of Wire, AWG or MCM	Diameter of Mandrel inches	Diameter of Mandrel mm	Size of Wire, AWG or MCM	Diameter of Mandrel inches	Diameter of Mandrel mm
14	3/8†	9.5	450	6 5/8	168
12	9/16†	14.3	500	6 3/4	171
10	5/8†	15.9	550	10 1/2	267
8	3/4†	19.0	600	11	279
6	1 1/4	31.8	650	11 1/4	286
4	1 3/8	34.9	700	11 1/2	292
2	1 9/16	39.7	750	12	305
1	2 11/16	68.3	800	12 1/4	311
0	2 7/8	73.0	850	12 1/2	318
00	3	76.2	900	12 7/8	327
000	3 1/4	82.6	950	13 1/4	337
0000	3 1/2	88.9	1000	13 1/2	343
250	5 3/16	132	1250	17 1/2	444
300	5 1/2	140	1500	18 1/2	470
350	5 7/8	149	1750	19 3/4	502
400	6 1/4	159	2000	20 1/2	521

† The values apply throughout to conductors having two fibrous coverings. For No. 14, 12, 10 and 8 AWG conductors having one fibrous covering, the mandrel diameters shall be 5/16, 3/8, 9/16 and 11/16 inch, respectively (7.9, 9.5, 14.3 and 17.5 mm, respectively).

Copyright National Electrical Manufacturers Association
Provided by IHS under license with NEMA
No reproduction or networking permitted without license from IHS

Not for Resale

(*d*) Agitated constant-temperature bath of distilled water which can be maintained at 21°C ± 0.5°C. The bath shall be either fitted with a cover to keep out dust or placed within a tight enclosure during the test. If, at any time, the water becomes dirty or shows the presence of a surface film of dust or wax, it shall be replaced by fresh water.

6.13.3.2 *Test Procedure.* Before cutting a test specimen to size, the coil or reel to be tested shall be permitted to attain a room temperature of not less than 21°C. The handling and flexing of samples and specimens shall be reduced to the absolute minimum necessary in testing.

The test specimen [24 inches (610 mm) ± ¼ inch] shall be bent around a mandrel having the diameter given in Table 6-10. For sizes 2 AWG or smaller, as many turns of the test specimen about the mandrel shall be made as will permit the specimen to conform closely to the mandrel, with a 2- to 2½-inch (50.8 to 63.5 mm) straight length remaining at each end of the specimen. Adjacent turns shall be separated by ⅛ to ¼ inch (3.2 to 6.4 mm). For sizes larger than No. 2 AWG, a single U-turn of the specimen shall be made about the mandrel.

The test specimen shall be removed from the mandrel without disturbing its form and placed in the desiccator over anhydrous calcium chloride at a room temperature of not less than 21°C for at least 18 hours. It shall then be removed from the desiccator and weighed to the nearest 10 milligrams, Weight W.

The specimen shall then be immersed in the distilled water bath, with 1 inch (25.4 mm) ± ½ inch of each end of the coil or U-bend projecting above the surface of the water. After 24 hours, the specimen shall be removed from the bath, shaken vigorously for 5 seconds to remove adherent moisture and weighed, Weight W_1. The weighing shall be completed within 2 minutes after the specimen is removed from the bath. All fibrous coverings other than tape shall be removed from the full length of the specimen, and the conductor, insulation and tape, if any, shall be weighed, Weight W_2.

6.13.3.3 *Calculation.* The moisture absorption shall be expressed as a percentage of the moisture absorbed by the fibrous covering and shall not be corrected for the portion of the specimen projecting above the water. The percentage of absorption shall be calculated (to 0.1 percent) as follows:

$$\text{Moisture absorption, percent} = 100 \times \frac{(W_1 - W)}{W - W_2}$$

6.14 Saturant for Fibrous Covering for Aerial Cables

6.14.1 Sampling of Saturant for Tests. When ring and ball softening point, penetration and loss by heating tests are required in accordance with ASTM E 28, samples of the saturant shall be selected in accordance with Table 6-11. Each sample shall be sufficient to provide the number of test specimens shown in Table 6-12.

6.14.2 For the ring-and-ball softening-point test, each specimen shall be at least twice that required to fill the desired number of rings and, in no case, less than 40 grams; for the penetration test, the size of the specimen shall be sufficient to fill the container to a depth of not less than ⅝ inch (15.9 mm); for the loss by heating test, the test sample shall be 50.0 grams plus or minus 0.5 gram.

Table 6-11
Number of Samples

Quantity of Completed Cable Ordered		Number of Samples
feet	meters	
Less than 25,000	Less than 7620	1
25,000 to 50,000	7620 to 15,240	2
Over 50,000	Over 15,240	
First 50,000	First 15,240	2
Each additional 50,000	Each additional 15,240	1

Table 6-12
Number of Test Specimens

Quantity of Completed Cable Ordered		Number of Test Specimens		
feet	meters	Ring and Ball Test	Penetration Test	Loss by Heating Test
Less than 25,000	Less than 7620	1	1	1
25,000 to 50,000	7620 to 15,240	2	2	2
Over 50,000	Over 15,240			
First 50,000	First 15,240	2	2	2
Each additional 50,000	Each additional 15,240	1	1	1

Copyright National Electrical Manufacturers Association
Provided by IHS under license with NEMA
No reproduction or networking permitted without license from IHS
Not for Resale

6.15 Braided Cables for Outdoor Installations

6.15.1 Sampling of Cable for Tests

6.15.1.1 When tests are required, a sample of the length given in Table 6-13 shall be taken from any coil or reel length.

6.15.1.2 *Number and Length of Test Specimens.* From each of the samples selected in accordance with 6.15.1.1, test specimens shall be prepared as follows:

Test	Number of Test Specimens	Length of Test Specimens	
		inches	mm
Mineral filler content	1	6	152
Bending	1	*	*
Melting	1	6	152
Dripping	1	6	152

* The length of sample remaining after the removal of the test specimens for the melting, dripping and mineral-filler content tests shall be used for the bending test.

6.15.2 Mineral Filler Content. The braid, together with the adhering compound, shall be removed from a 6-inch (152-mm) section of finished wire or cable and weighed, Weight A. The weighed specimen shall be ashed and the ash weighed, Weight B. All weights shall be measured to the nearest 0.01 gram. The percentage of mineral filler shall be determined as follows:

$$\frac{B}{A} \times 100$$

In constructions involving two or more overall braid coverings, the mineral filler content of the complete braid shall be determined, using a 6-inch (152-mm) section of the completed braid covering from the finished wire or cable, together with all adhering compound.

6.15.3 Bending Test. The test specimen shall be wrapped around a mandrel having an overall diameter equal to the cable diameter multiplied by the factor given in Table 6-14.

Single-conductor cable 0.500 inch (12.7 mm) and smaller shall be wrapped around the mandrel three times. Single-conductor cable larger than 0.500 inch (12.7 mm) and any multiple-conductor cable shall be wrapped once around the mandrel.

The specimens shall be held at a temperature of 0°C (32°F) for approximately 1 hour before bending and shall be bent immediately upon their removal from the cooling chamber.

The wrapping shall be done at an approximately uniform rate not greater than 12 turns per minute.

Table 6-13
Minimum Length of Samples

Quantity of Completed Cable Ordered		Size of Conductor, AWG	Nominal Overall Diameter of Cable		Minimum Length of Each Sample			
					Single Conductor		Multiple Conductor	
feet	meters		inches	mm	cable feet	cable meters	cable feet	cable meters
50,000 or more	15,240 or more							
Each 50,000	Each 15,240	Any size	0.500 and less	12.70 and less	5	1.52	3½	1.07
Each 50,000	Each 15,240	Less than 4/0	0.501–1.000	12.73–25.40	4	1.22	4	1.22
Each 50,000	Each 15,240	4/0 and over	0.501–1.000	12.73–25.40	5	1.52	5	1.52
Each 50,000	Each 15,240	Less than 4/0	1.001–1.500	25.43–38.10	6	1.83	6	1.83
Each 50,000	Each 15,240	4/0 and over	1.001–1.500	25.43–38.10	7	2.13	7	2.13
Each 50,000	Each 15,240	Any size	1.501–2.000	38.10–50.80	8	2.44	8	2.44

Table 6-14
Multiplying Factors for Determining Diameter of Mandrel for Bending Test

Thickness of Conductor Insulation		Cable Diameter inches	0–0.500	0.501–1.000		1.001–1.500		Over 1.500
		mm	0–12.70	12.73–25.40		25.43–38.10		Over 38.10
mils	mm	Conductor Size, AWG	Any size	Up to 4/0	4/0 and Over	Up to 4/0	4/0 and Over	Any size
155 and smaller	3.94 and smaller		3	4	6	6	8	12
170–310	4.32–7.87		4	5	7	7	10	12
Over 310	Over 7.87		...	6	8	8	12	12

Copyright National Electrical Manufacturers Association
Provided by IHS under license with NEMA
No reproduction or networking permitted without license from IHS

Not for Resale

6.15.4 Melting Test. The test specimen shall be wrapped, except for 1 inch (25.4 mm) at each end, with a piece of clean white glazed paper and suspended horizontally by the ends in an electrically heated oven which is equipped with suitable automatic temperature control and which has been heated to 64.4–66.7°C (148–152°F). The specimen shall be maintained at this temperature for ½ hour and then allowed to cool before inspection.

6.15.5 Dripping Test. The wire shall be bared for a distance of ¾ inch (19 mm) from each end of the test specimen. The specimen, with one end secured in a suitable clamp, shall then be suspended at an angle of 45 degrees in an electrically heated oven which is equipped with suitable automatic temperature control and which has been heated to 81.1–83.3°C (178–182°F). The specimen shall be maintained at this temperature for 1 hour.

6.16 Fibrous or Composite Jackets

6.16.1 Test Samples. A sample of the jacketed cable shall be selected in accordance with 6.4.5, except that the minimum length of each sample in cable feet shall be as shown in Table 6-15.

Table 6-15

Nominal Overall Diameter of Cable		Minimum Length of Each Sample	
inches	mm	cable feet	cable meters
0–0.500	0–12.70	3	0.91
0.501–1.000	12.73–25.40	5	1.52
1.001–1.500	25.43–38.10	7	2.13
1.501–2.000	38.13–50.80	10	3.05
2.001–2.500	50.83–63.50	11	3.35
2.501–3.000	63.53–76.20	13	3.96

6.16.2 Bending Test. A sample shall be kept at 0°C (32°F) for 1 hour and then wrapped around a mandrel having a diameter in accordance with Table 6-16.

Table 6-16

Nominal Overall Diameter of Cable		Number of Turns	Diameter of Mandrel as a Multiple of the Nominal Cable Diameter
inches	mm		
0–1.000	0–25.40	2½	5
1.001–1.500	25.43–38.10	2	6
1.501 and over	38.13 and over	1½	8

6.16.3 Moisture Absorption Test. The sample used for the bending test shall be weighed, bent and, while still bent, shall be immersed, except for 3 inches (76.2 mm) at each end, for 24 hours in tap water at room temperature. Adjacent turns of cotton-wrapped or served wires shall be separated in accordance with 6.13.3.2. The sample shall then be removed from the water, lightly blotted and weighed.

When the fibrous or composite jacket is not wholly separable from the insulation, the weight of the conductor insulation shall be determined by computation from the dimensions and specific gravity of the insulation.

If fillers are integral with the jacket, they shall be considered as a part of the jacket in computing the weight.

6.17 Thickness of Metallic Sheaths. The thickness of the sheath shall be determined by measurements made with a micrometer caliper having a rounded anvil. The measurements shall be made directly on two specimens of the sheath removed from the cable, one from each end of the reel length. At least five separate measurements, approximately equally spaced around the circumference, shall be made on each specimen, and the average of all the measurements on the two specimens shall be considered as the average thickness of the sheath. The minimum of all of the measurements obtained shall be considered as the minimum thickness of the sheath.

Specimens of the sheath shall be free from external mechanical injury, not less than 3 inches (76.2 mm) long, with the ends cut perpendicular to the axis, and shall be taken before the cable is shipped.

6.18 Thickness of Jute Beddings and Servings. The thickness of jute bedding under the armor shall be determined by the use of a diameter tape and shall be considered as ½ of the difference in the measurements under and over the serving. The measurement in each case shall be the average of five readings taken at different points along the serving.

Copyright National Electrical Manufacturers Association
Provided by IHS under license with NEMA
No reproduction or networking permitted without license from IHS
Not for Resale

6.19 Tests for Thermoplastic Jackets

6.19.1 Heat Shock. Samples (see 6.4.5) of polyvinyl-chloride-jacketed wire or cable shall be wound tightly around a mandrel having a diameter in accordance with Table 6-17, held firmly in place, and subjected to a temperature of 121°C ± 1°C for 1 hour.

6.19.2 Heat Distortion

6.19.2.1 *Test Specimen.* A sample of the jacket approximately 8 inches (203 mm) long shall be prepared to have a thickness of 50 mils (1.27 mm) ± 10 mils and smooth surfaces. From this sample, test specimens (see 6.4.5) 1 inch (25.4 mm) long and 9/16 inch (14.3 mm) ± 1/16 inch wide shall be prepared. Where the diameter of the cable does not permit the preparation of a specimen 9/16 inch (14.3 mm) wide, a molded sheet of the same compound may be used.

The thickness of the specimen, T_1, shall be measured with a Randall & Stickney, or equivalent, gauge having a 3/8-inch (9.5 mm) foot with no loading other than the 85 grams of the gauge.

6.19.2.2 *Test Procedure.* The following steps shall be completed in 3 hours. The Randall & Stickney, or equivalent, gauge with a load of 2000 grams on the foot shall be placed in an oven which is preheated to the specified temperature. At the end of 1 hour, the test specimen shall be placed in the oven, and both the gauge and the test specimen shall remain in the oven for 1 hour. At the end of this 1-hour period, the specimen shall be placed directly under the foot of the gauge and allowed to remain in the oven under load for 1 hour at the specified temperature. At the end of this period, the thickness, T_2, shall be read on the dial of the gauge. The distortion shall be calculated as follows:

$$\text{Distortion, percent} = \frac{T_1 - T_2}{T_1} \times 100$$

6.19.3 Cold Bend. The test specimen shall be subjected to the specified temperature for 1 hour and then bent 180 degrees around a mandrel having a diameter in accordance with Table 6-18 immediately upon its removal from the cooling chamber. The bend shall be made at a uniform rate, and the time required shall not exceed 1 minute.

Table 6-18

Outside Diameter of Wire or Cable		Diameter of Mandrel as a Multiple of the Outside Diameter of Cable
inches	mm	
0–0.800	0–20.32	8
0.801 and over	20.35 and over	10

6.19.4 Environmental Cracking. Except as otherwise specified in 6.19.4.1 and 6.19.4.2, this test shall be made in accordance with ASTM D 1693.

6.19.4.1 *Test Specimen.* (*See 6.4.5*) The number and lengths of samples shall be selected in accordance with 6.4.5. Test specimens approximately 1.5 inch (38.1 mm) long, 0.5 inch (12.7 mm) wide and 0.125 inch (3.18 mm) thick shall be molded from material taken from the completed cable. The temperature of the molded specimens shall be lowered at any suitable rate. A slit made with a razor blade, approximately 0.75 inch (19.0 mm) long and from 0.020 to 0.025 inch (0.51 to 0.64 mm) deep, shall be centrally located on one of the 1.5 inch by 0.5 inch (38.1 by 12.7 mm) surfaces.

6.19.4.2 *Test Procedure.* The specimens shall be bent with the slit on the outside and placed in a test tube 200 millimeters long and 32 millimeters in outside diameter. The cracking agent (Igepal CO-630 made by the GAF Corporation, or its equivalent) shall be added to completely cover the specimen. The test tube, suitably closed by means such as a foil-covered cork, shall be placed in an oven at 50°C ± 1°C for 48 hours. At the end of this period, the specimens shall be removed, allowed to cool to room temperature, and inspected for cracking.

Table 6-17

Outside Diameter of Wire or Cable		Number of Adjacent Turns	Diameter of Mandrel as a Multiple of the Outside Diameter of Cable
inches	mm		
0–0.750	0–19.05	6	3
0.751–1.500	19.08–38.10	180-degree bend	8
1.501 and larger	38.13 and larger	180-degree bend	12

Copyright National Electrical Manufacturers Association
Provided by IHS under license with NEMA
No reproduction or networking permitted without license from IHS

Not for Resale

WC 3-80 6470247 0004747 9

6.19.5 Absorption Coefficient Test for Jackets. The number and length of samples shall be selected in accordance with 6.4.5. Three test specimens shall be taken from each sample. One test specimen out of three shall be tested and the other two specimens held in reserve, except that when only one sample is selected in accordance with 6.4.5, all three test specimens shall be tested and the average of the results reported. The absorption coefficient of polyethylene jacket compounds shall be determined in accordance with ASTM D 3349.

6.19.6 Flame Test ▲

6.19.6.1 The test apparatus shall consist of the following:

1. Test chamber of sheet metal 12 inches (305 mm) wide, 14 inches (356 mm) deep and 24 inches (610 mm) high, which is open at the top, and which is provided with means for clamping the test specimen at the upper end and supporting it in a vertical position.
2. Means for adjusting the position of the test specimen.
3. A 4-pound (1.8-kg) weight (for 8 AWG and smaller sizes) to be attached to the lower end of the test specimen to keep it taut.
4. Tirrill burner with an attached pilot light and mounted on a 20-degree angle block. The burner shall have a nominal bore of ⅜ inch (9.5 mm) and a length of approximately 4 inches (102 mm) above the primary air inlets.
5. An adjustable steel angle (jig) attached to the bottom of the chamber to insure the correct location of the burner with relation to the test specimen.
6. Gas—a supply of ordinary illuminating gas at normal pressure.
7. Watch or clock with a hand which makes one complete revolution per minute.
8. Flame indicators consisting of strips of gummed kraft paper having a nominal thickness of 5 mils (0.127 mm) and a width of ½ inch (12.7 mm).*

* The paper used for the indicators is known to the trade as 60-pound stock and is material substantially the same as that described in Federal Specification UU-T-111 covering "Tape, Paper, Gummed (Kraft)."†

† This paragraph is approved by NEMA as Authorized Engineering Information.

6.19.6.2 The test shall be made in a room which is generally free from drafts of air, although a ventilated hood may be used if air currents do not affect the flame. One end of the test specimen approximately 22 inches (559 mm) in length shall be clamped in position at the upper end of the chamber, and (for 8 AWG and smaller) the 4-pound (1.8-kg) weight attached to keep the specimen taut. A paper indicator shall be applied to the specimen so that the lower edge is 10 inches (254 mm) above the point at which the inner blue cone of the test flame is to be applied. The indicator shall be wrapped once around the specimen, with the gummed side toward the conductor. The ends shall be pasted evenly together and shall project ¾ inch (19.0 mm) from the specimen on the opposite side of the specimen to that to which the flame is to be applied. The paper tab shall be moistened only to the extent necessary to permit proper adhesion. The height of the flame with the burner vertical shall be adjusted to 5 inches (127 mm), with an inner blue cone 1½ inches (38.1 mm) high.

6.19.6.3 The burner, with only the pilot lighted, shall be placed in front of the sample so that the vertical plane through the stem of the burner includes the axis of the wire or cable. The angle block shall rest against the jig, which shall be adjusted so that there is a distance of 1½ inches (38.1 mm) along the axis of the burner stem between the tip of the stem and the surface of the specimen. The valve supplying the gas to the burner proper shall then be opened and the flame automatically applied to the sample. This valve shall be held open for 15 seconds and then closed for 15 seconds. This process shall be repeated four times. During each application of the flame, the specimen shall be adjusted, if necessary, so that the top of the inner blue cone touches the surface of the specimen. If more than 25 percent of the extended portion of the indicator is burned after the five applications of the flame, the wire is considered to have conveyed flame. The duration of burning of the specimen after the fifth application of the flame shall be noted, and any specimen which continues to burn for more than 1 minute shall be considered to have failed this test.

6.20 TESTS FOR DISCHARGE-RESISTING JACKETS

6.20.1 Surface Resistivity. A sample of the completed cable of suitable length shall be immersed, except for the ends, in water at room temperature for 48 hours. At the end of this period, the sample shall be removed from the water. The excess surface moisture shall be wiped off with blotting paper and the sample allowed to remain at room temperature for 10 minutes. Two 1-inch- (25.4-mm) wide foil electrodes shall be wound around the cable surface with a 6-inch (152-mm) spacing. A 250–500 volt direct-current potential shall be applied between the two electrodes, and the resistance shall be measured in accordance with ASTM D257. The specific surface resistivity shall be calculated by the following formula.

▲ Editorially revised.

Copyright National Electrical Manufacturers Association
Provided by IHS under license with NEMA
No reproduction or networking permitted without license from IHS
Not for Resale

$$p = 0.524\ RD$$

where

p—Specific surface resistivity.

R—Surface resistance in megohms per 6-inch spacing.

D—Cable diameter in inches.

6.20.2 U-bend Discharge. A sample of the completed cable shall be bent, in the form of a U, 180 degrees around a mandrel having a diameter in accordance with the following table:

Conductor Size, AWG or kcmil▲	Diameter of Mandrel as a Multiple of the Outside Diameter of Cable
8–2	6
1–3/0	8
4/0–500	10
Over 500	12

The sample shall be mounted with the apex of the U above and in contact with a smooth metal plate and with the legs of the U perpendicular to the plate. After not less than 30 minutes nor more than 45 minutes following the bending, a source of 60-hertz alternating-current potential of 100 volts per mil of nominal insulation thickness shall be applied between the conductor and the metal plate. This potential shall be maintained continuously for at least 6 hours. This test shall be made at room temperature.

6.21 Volume Resistivity

6.21.1 Test Sample. One sample shall be taken from each lot or from each 25,000 feet of completed cable, whichever is less.

6.21.2 Conductor Stress Control▲. The sample shall be cut in half longitudinally and the conductor removed. Four silver-painted electrodes shall be applied to the conductor stress control layer. The two potential electrodes shall be at least 2 inches (50.8 mm) apart. A current electrode shall be placed at least 1 inch (25.4 mm) beyond each potential electrode. When a high degree of accuracy is not required, this test may be made with only two electrodes spaced at least 2 inches (50.8 mm) apart.

The power of the test circuit shall not exceed 100 milliwatts. The test shall be made at the specified temperature with either alternating- or direct-current voltage.

The volume resistivity shall be calculated as follows:

$$P = \frac{R\ (D^2 - d^2)}{100\ L}$$

where

P = Volume resistivity in ohm-meters.

R = Measured resistance in ohms.

D = Diameter over the conductor stress control layer in inches.

d = Diameter over the conductor in inches.

L = Distance between potential electrodes in inches.

6.21.3 Insulation Shield▲. Four silver-painted annular-ring electrodes shall be applied to the surface of the insulation shield layer. The two potential electrodes shall be at least 2 inches (50.8 mm) apart. A current electrode shall be placed at least 1 inch (25.4 mm) beyond each potential electrode. When a high degree of accuracy is not required, this test may be made with only two electrodes spaced at least 2 inches (50.8 mm) apart.

The power of the test circuit shall not exceed 100 milliwatts. The test shall be made at the specified temperature with either alternating- or direct-current voltage.

The volume resistivity shall be calculated as follows:

$$P = \frac{2R\ (D^2 - d^2)}{100\ L}$$

where

P = Volume resistivity in ohm-meters.

R = Measured resistance in ohms.

D = Diameter over the insulation shield layer in inches.

d = Diameter over the insulation in inches.

L = Distance between potential electrodes in inches.

6.22 Stripping Test. Test samples and specimens shall be selected in accordance with Tables 6-5 and 6-6. The test specimen shall be approximately 15 inches long, and all coverings over the extruded insulation shield shall be removed.

Starting at one end, two parallel longitudinal cuts ½ inch (12.7 mm) apart and not less than 12 inches (305 mm) long shall be made through the insulation shield. The specimen shall be rotated 180 degrees and two identical cuts shall be made starting from the same end. Each ½-inch (12.7-mm) strip shall be peeled back from the cut end for a distance of 2 inches (50.8 mm).

The specimen shall be mounted horizontally in a testing machine and secured at each end. The 2-inch (50.8-mm) end of the peeled strip shall be gripped in the testing machine in such a manner that it can be pulled at an angle of 90 degrees to the cable axis.

Each strip shall be peeled from the cable at a constant speed not exceeding ½ inch (12.7 mm) per second for a distance of not less than 10 inches (254 mm).

The angle of pull shall be maintained as close as possible to 90 degrees throughout the test.

The tension necessary to remove the strip shall be monitored continuously and the minimum value shall be recorded.

2581
Copyright National Electrical Manufacturers Association
Provided by IHS under license with NEMA
No reproduction or networking permitted without license from IHS

Not for Resale

6.23 Retests for Tests on Samples (Except Physical and Aging Tests) (see 6.4.16)

6.23.1 If all of the samples pass the applicable tests described in 6.5 to 6.21, inclusive, 6.22, 6.27, and 6.28, the lot of cable which they represent shall be considered as meeting the requirements of this standard. ▲

6.23.2 If any sample fails to pass these tests, the length of cable from which the sample was taken shall be considered as not meeting the requirements of this standard and another sample shall be taken from each of the two other lengths of cable in the lot of cable under test. If either of the second samples fails to pass the test, the lot of cable shall be considered as not meeting the requirements of this standard. If both such second samples pass the test, the lot of cable (except the length represented by the first sample) shall be considered as meeting the requirements of this standard.

6.23.3 Failure of any sample shall not preclude resampling and retesting the length of cable from which the original sample was taken.

Electrical Tests on Completed Cables

6.24 Voltage Tests

6.24.1 General. These tests consist of voltage tests on each length of completed cable. Except for the direct-current spark test and the alternating-current spark test, the voltage shall be applied between the conductor or conductors and the metallic sheath, metallic shield, metallic armor, or water, and the rate of increase from the initially applied voltage to the specified test voltage shall be approximately uniform and shall be not more than 100 percent in 10 seconds nor less than 100 percent in 60 seconds. ▲

6.24.2 Alternating-current Voltage Test. This test shall be made with alternating potential from a transformer and generator of ample capacity but, in no case, less than 5 kilovoltamperes. The frequency of the test voltage shall be nominally between 25 and 60 hertz and shall have a wave shape approximating a sine wave as closely as possible.

The initially applied alternating-current test voltage shall not be greater than the rated alternating-current voltage of the cable under test.

The duration of the alternating-current voltage test shall be 5 minutes.

6.24.3 Direct-current Voltage Test. This test is applicable to cables without insulation shield rated up through 5000 volts and to all cables rated 5001 volts and above and shall be made after the insulation resistance test described in 6.25. The equipment for the direct-current voltage test shall consist of a battery, generator or suitable rectifying equipment and shall be of ample capacity.

The initially applied direct-current voltage shall be not greater than 3.0 times the rated alternating-current voltage of the cable.

The duration of the direct-current voltage test shall be 15 minutes for cables with insulation shield and 5 minutes for cables without insulation shield.

6.24.4 Alternating-current Spark Test

6.24.4.1 *Application.* This test shall apply to single-conductor cable and assemblies of single-conductor cables rated 0 through 2000 volts.

This test shall not apply to:

1. Multiconductor cables other than assemblies of single-conductor cables.
2. Cables with insulation shield.
3. Cables with metallic sheath or armor.
4. Assemblies containing uninsulated conductors.
5. Cables rated above 2000 volts.

6.24.4.2 *Test Apparatus.* Test apparatus shall consist of:

1. A source of single-phase alternating-current potential capable of maintaining the required voltage under all normal leakage current conditions.
2. An electrode capable of maintaining contact, throughout its length, with the periphery of the cable under test.
3. A means of measuring voltage between electrode and ground.
4. A means of indicating a fault (failure).

6.24.4.3 *Test Procedure.* One side of the potential source shall be connected to the electrode and the other side of the potential source shall be connected to ground. The conductor(s) in the cable shall be tested to assure continuity when grounded at one or both ends. All ground connections shall be bonded (common). The fault indicator shall be connected to indicate abnormal current between electrode and ground.

After the specified voltage is applied, the entire length of cable shall be passed through the electrode in a manner and at a speed such that every section of cable surface will have maintained electrode contact for not less than 18 positive and negative voltage crests.

The maximum speed of the cable under test may be determined in either U.S. customary units or in metric equivalents as follows:†

1. U.S. Customary Units Formula for Determining Maximum Speed of Cable

$$MS = 5/9 \times F \times EL$$

Copyright National Electrical Manufacturers Association
Provided by IHS under license with NEMA aragrapn is approved by NEMA as Authorized Engineering Information.
No reproduction or networking permitted without license from IHS Not for Resale

Where —

MS = Maximum speed in feet per minute.
F = Frequency in Hertz.
EL = Electrode length in inches.

2. *Equivalent Metric Formula for Determining Maximum Speed of Cable*

$$MS = 1/150 \times F \times EL$$

Where —

MS = Maximum speed in meters per minute.
F = Frequency in Hertz.
EL = Electrode length in millimeters.

6.24.4.4 *Failure.* Any indication by the fault indicator shall constitute a failure.

6.24.5 Direct-current Spark Test. This test is applicable to single-conductor cables and assemblies of insulated single-conductor cables without insulation shield, and without metallic sheath or metallic armor, rated 0 through 2000 volts. The equipment for the direct-current spark test shall consist of a direct-current sparker of ample voltage and a suitable electrode. The sparker shall be capable of maintaining the specified test voltage under all normal conditions of leakage current. The voltage shall be applied between the outside surface of the cable and the conductor(s) for not less than 0.05 second. The conductor(s) shall be grounded.

The electrode shall make contact with the entire exposed surface of a single-conductor cable and of an assembly of twisted single-conductor cables.

Where an assembly of twisted single-conductor cables is subjected to the direct-current spark test, the individual conductors shall be similarly tested prior to assembly.

6.24.6 Fibrous-covered Cables Without Metallic Sheath, Metallic Shield, or Metallic Armor. Except for the direct-current spark test (see 6.24.5) and the alternating-current spark test (see 6.24.4), single conductor cables of this type, before application of the fibrous covering, shall be immersed in water for at least 6 hours and, while still immersed, tested between the conductor and water.

Multiple-conductor cables of this type shall be tested without immersion in water, and each insulated conductor shall be tested against all other conductors.

6.24.7 Jacketed Cables Without Metallic Sheath, Metallic Shield, or Metallic Armor. Except for the direct-current spark test (see 6.24.5) and the alternating-current spark test (see 6.24.4), single conductor cables of this type which are twisted together into an assembly of two or more conductors without an overall jacket or covering shall be immersed in water for at least 1 hour and tested while still immersed; all other single-conductor and multiple-conductor cables of this type shall be immersed in water for at least 6 hours and tested while still immersed. Each insulated conductor shall be tested against all other conductors connected to the grounded water tank.

6.24.8 Cables With Metallic Sheath, Metallic Shiled, or Metallic Armor. All cables of this type shall be tested with the metallic sheath, shield or armor grounded, without immersion in water, at the test voltage specified. For calbes having a metallic sheath, shield or armore over the individual conductor(s), the test voltage shall be applied between the insulated conductor(s) and ground. For multiple-conductor cables with nonshielded individual conductors having a metallic sheath, shield or armor over the cable assembly, the test voltage shall be applied between each insulated conductor and all other conductors and ground.

6.24.9 Voltage Tests After Installation. If voltage tests are made after installation, they shall be made immediately. The test voltage shall be a direct-current voltage as given in Table 6-19 or 6-20 and shall be applied in accordance with 6.24.1 and 6.24.3.

6.25 Insulation Resistance

6.25.1 Test Apparatus. The test apparatus shall consist of a source of constant potential of from 100 to 500 volts and such other apparatus as is listed in ASTM D 257.

6.25.2 Test Procedure. The insulation resistance shall be measured after the completed cable alternating-current voltage tests or before any direct-current voltage tests specified in 6.24. Where the

Table 6-19
d-c Test Voltage After Installation for Cables with Ozone-resisting Insulation

Rated Circuit Voltage Phase to Phase, Volts	Conductor Size, AWG	d-c Test Voltage, kV: 100 Percent Insulation Level	d-c Test Voltage, kV: 133 Percent Insulation Level
2001–5000	8 and over	25	25
5001–8000	6 and over	35	35
8001–15000	2 and over	55	65
15001–25000	1 and over	80	...
25001–28000	1 and over	85	...

Table 6-20
d-c Test Voltage After Installation for Series Lighting Cables With Ozone-resisting Insulation

Circuit Voltage, Volts	Conductor Size, AWG	d-c Test Voltage, kV
2001–3000	10-4	25.0
3001–6000	8-4	25.0
6001–9000	8-4	45.0

Copyright National Electrical Manufacturers Association
Provided by IHS under license with NEMA
No reproduction or networking permitted without license from IHS

Not for Resale

Table 6-21
Temperature Correction Factors for Insulation Resistance to 15.6°C (60°F)

Temperature		Coefficient for 1°F									
°F	°C	1.03	1.04	1.05	1.06	1.07	1.08	1.09	1.10	1.11	1.12
50	10.0	0.75	0.68	0.62	0.56	0.51	0.46	0.42	0.38	0.35	0.32
51	10.6	0.77	0.70	0.65	0.59	0.54	0.50	0.46	0.42	0.39	0.36
52	11.1	0.79	0.73	0.68	0.63	0.58	0.54	0.50	0.47	0.43	0.40
53	11.7	0.82	0.76	0.71	0.67	0.62	0.58	0.55	0.51	0.48	0.45
54	12.2	0.84	0.79	0.75	0.70	0.67	0.63	0.60	0.56	0.54	0.51
55	12.8	0.87	0.82	0.78	0.75	0.71	0.68	0.65	0.62	0.60	0.57
56	13.3	0.89	0.86	0.82	0.76	0.76	0.74	0.71	0.69	0.66	0.64
57	13.9	0.92	0.89	0.87	0.84	0.82	0.80	0.78	0.76	0.73	0.71
58	14.4	0.94	0.93	0.91	0.90	0.88	0.86	0.85	0.83	0.82	0.80
59	15.0	0.97	0.96	0.96	0.95	0.94	0.93	0.92	0.91	0.90	0.89
60	15.6	1.00	1.00	1.00	1.00	1.00	1.00	1.00	1.00	1.00	1.00
61	16.1	1.03	1.04	1.05	1.06	1.07	1.08	1.09	1.10	1.11	1.12
62	16.7	1.06	1.08	1.10	1.13	1.15	1.17	1.19	1.21	1.24	1.27
63	17.2	1.09	1.13	1.16	1.19	1.23	1.26	1.30	1.34	1.38	1.42
64	17.8	1.13	1.17	1.22	1.26	1.31	1.36	1.41	1.47	1.53	1.58
65	18.3	1.16	1.22	1.28	1.34	1.40	1.47	1.54	1.62	1.70	1.78
66	18.9	1.20	1.27	1.35	1.42	1.50	1.59	1.69	1.78	1.88	1.98
67	19.4	1.23	1.32	1.41	1.51	1.62	1.72	1.84	1.96	2.09	2.21
68	20.0	1.27	1.37	1.48	1.60	1.72	1.85	1.99	2.15	2.31	2.48
69	20.6	1.31	1.43	1.55	1.69	1.84	2.00	2.18	2.36	2.57	2.77
70	21.1	1.35	1.48	1.63	1.79	1.97	2.17	2.38	2.60	2.85	3.10
71	21.7	1.39	1.54	1.72	1.90	2.11	2.34	2.59	2.87	3.17	3.46
72	22.2	1.43	1.60	1.80	2.02	2.26	2.53	2.82	3.15	3.52	3.90
73	22.8	1.47	1.67	1.89	2.14	2.42	2.72	3.08	3.46	3.90	4.37
74	23.3	1.52	1.74	1.98	2.27	2.58	2.94	3.35	3.81	4.31	4.88
75	23.9	1.56	1.80	2.08	2.40	2.76	3.18	3.65	4.19	4.78	5.47
76	24.4	1.61	1.87	2.19	2.54	2.96	3.43	3.98	4.61	5.30	6.12
77	25.0	1.66	1.95	2.30	2.70	3.17	3.70	4.34	5.08	5.88	6.85
78	25.6	1.71	2.02	2.41	2.86	3.39	4.00	4.73	5.59	6.51	7.68
79	26.1	1.76	2.11	2.53	3.03	3.62	4.33	5.16	6.14	7.27	8.59
80	26.7	1.81	2.19	2.66	3.21	3.87	4.67	5.61	6.72	8.07	9.65
81	27.2	1.87	2.28	2.80	3.40	4.15	5.04	6.12	7.43	8.98	10.80
82	27.8	1.92	2.37	2.94	3.60	4.43	5.45	6.69	8.18	9.92	12.10
83	28.3	1.98	2.47	3.08	3.82	4.72	5.89	7.28	9.00	11.00	13.60
84	28.9	2.04	2.57	3.23	4.05	5.04	6.35	7.92	9.90	12.2	15.2
85	29.4	2.10	2.67	3.40	4.30	5.42	6.84	8.67	10.8	13.5	17.0

voltage tests are made on wire or cable immersed in water, the insulation resistance shall be measured while the cable is still immersed. Single-conductor cables shall be tested between the conductor and metallic sheath or water. Multiple-conductor cables with nonshielded conductors shall be tested between each conductor and all other conductors and sheath or water. Multiple-conductor cables with shielded conductors shall be tested between the conductor and shield. The conductor under test shall be connected to the negative terminal of the test equipment and readings shall be taken after an electrification of 1 minute.

Each coil, reel or length of wire or cable shall have an insulation resistance in megohms-1000 feet at a temperature of 15.6°C (60°F) of not less than the value of R calculated as follows:

$$R = K \log_{10} \frac{D}{d}$$

Where—

R = Insulation resistance in megohms-1000 feet.

K = Constant for the grade of insulation. (See Part 3.)

D = Diameter over the insulation.

d = Diameter under the insulation.

If the temperature at the time of measurement differs from 15.6°C (60°F), the resistance shall be corrected to that at 15.6°C (60°F) by multiplying the measured value by the proper correction factor given in Table 6-21, using the coefficient (see 6.25.3) for the particular grade of insulation and temperature in question. The temperature of the water shall be not less than 10°C (50°F) nor more than 29.4°C (85°F).

Copyright National Electrical Manufacturers Association
Provided by IHS under license with NEMA
No reproduction or networking permitted without license from IHS
Not for Resale

6.25.3 Determination of Temperature Correction Factors for Insulation Resistance. Three samples, preferably of 14 AWG solid wire with a 45-mil (1.14-mm) wall of insulation, shall be selected as representative of the insulation under consideration. The samples shall be of sufficient length to yield insulation resistance values under 25000 megohms at the lowest water bath temperature.

The three samples shall be immersed in a water bath equipped with heating, cooling, and circulating facilities, with the ends of the samples extended at least 2 feet (0.6 meter) above the surface of the water and properly prepared for minimum leakage. The samples shall be left in the water at room temperature for 16 hours before adjusting the bath temperature to 10°C or before transferring the samples to a 10°C test temperature bath.

The resistance of the conductor shall be measured at suitable intervals until it remains unchanged for at least 5 minutes. The insulation will then be at the temperature of the bath as read on the bath thermometer. Insulation resistance shall then be measured in accordance with 6.25.2.

Each of the three samples shall be exposed to successive water temperatures of 10, 16, 22, 28 and 35°C and, returning, 28, 22, 16 and 10°C. Insulation resistance readings shall be taken at each temperature after equilibrium has been established.

The two sets of readings taken at the same temperature shall be averaged and, together with the reading at 35°C, plotted on semi-log paper. The insulation resistance value at 15.6°C (60°F) shall be read from the plot.

The 0.55°C (1°F) coefficient shall be calculated by dividing the insulation resistance at 15.6°C (60°F) by that at 16.1°C (61°F).

6.26 Partial Discharge Test Procedure ▲

Refer to ICEA Publication T-24-380 revised 1980.

6.27 Method for Flexibility Test for Continuously Corrugated Armor ●

A suitable length of armored cable with jacket removed, if any, shall be bent in a "U" bend around a mandrel having a diameter equal to not greater than 14 times the cable diameter with sufficient tension so it conforms closely to the periphery of the cylinder, straightened, and then bent 180 degrees in the reverse direction completing one cycle. The rate of bend shall be such that the test is completed within 1 minute. The test is performed at room temperature.

6.28 Method for Determining Permittivity (S.I.C.) and Dielectric Strength of Extruded Nonconducting Polymeric Stress Control Layers. The test specimen shall be an 18 inch (45.7 mm) length of conductor over which .015 - .030 inch (.038 - .076 mm) of nonconducting stress control material has been extruded.

The central 12 inch (30.5 mm) length shall be shielded using a silver-painted electrode or equivalent applied to the surface of the stress control material.

The capacity C, in picofarads, shall be measured at the required temperature using a suitable bridge and a 60 Hz potential. The specimen shall be held at the required temperature for at least 15 minutes prior to measurement.

The geometric capacitance C_o, in picofarads, shall be calculated for the 12 inch (30.5 mm) specimen as follows:

$$C_o = 7.354/\log_{10}(D/d)$$

The ratio of measured capacitance divided by the geometric capacitance, C/C_o, shall be the permittivity (S.I.C.) of the stress control material.

Following the capacitance measurement and while the specimen is held at the required temperature, a 60 Hz alternating current potential shall be applied between the conductor and the grounded shield (painted electrode) with an increasing rate of rise not in excess of 100 volts per second until dielectric failure occurs. The dielectric withstand stress, in volts per mil* shall be calculated as follows:

$$S = 2\,V/(D\text{-}d)\,1000$$

D and d in inches

V in volts, actual breakdown level

* S (V/mil) shall be expressed as MV/m by dividing by 25.4.

▲ Revised 7-15-1981.

● Added 5-12-1982.

Copyright National Electrical Manufacturers Association
Provided by IHS under license with NEMA
No reproduction or networking permitted without license from IHS

Not for Resale

reach the corresponding full-scale deflection shall not exceed 1 second. If logic circuitry is used, the response shall be gated based on no more than ten consecutive half cycles of test voltage. A time-based electronic window may be used as a recording aid only if it can be verified that the window is open between 0 and 90 degrees and between 180 and 270 degrees of the applied test voltage waveform.

(d) A partial-discharge calibrator. The partial-discharge calibrator shall consist of a pulse generator and a capacitor. The generator shall produce pulses which attain crest value in 0.5 microsecond or less and have a duration of 200 microseconds or more. These pulses shall be synchronized with the power supply frequency. The capacitance of the calibrating capacitor shall be between 50 and 150 picofarads.

6.26.4 Calibration of Test Equipment. The charge-transfer method shall be used to calibrate the test equipment. The calibrating charge transfer (in coulombs) is equal to the product of the coupling capacitance of the calibrating capacitor (in farads) and the calibrating pulse amplitude (in volts).

With the cable under test connected both to the transformer and to the primary detection circuit, the amplifier gain shall be so adjusted that when a charge transfer of 20 picocoulombs is impressed across the far end of the cable, one of the following primary display deflection requirements will be met:

(a) CRT trace, not less than 1 centimeter.

(b) X-Y recorder, not less than 2 centimeters.

(c) Charge transfer meter, not less than 20 percent of full scale.

When these or other supplementary measuring devices are used, their indicated values of charge transfer shall not differ from one another by more than 15 percent. It shall then be determined that a response is obtainable when a charge transfer of 5 picocoulombs is impressed across the far end of the cable without changing the amplifier gain.

When the output pulse height versus the charge transfer is plotted, the pulse height shall not depart from linearity by more than ± 10 percent of the reading.

Unless the calibrating capacitor is rated for use at the test voltages involved, the primary calibration circuit shall be disconnected before the power supply is energized. The amplifier gain shall not be readjusted after this has been done unless a means is provided for the continuous display of a suitable calibrating signal throughout the test. In any event, the primary display sensitivity shall not be reduced below 20 picocoulombs per centimeter.

Provision for the continuous display of a calibrating signal throughout the test shall be by means of:

(d) The calibrating capacitor which is full-voltage rated and forms part of the primary calibration circuit which need not, in this case, be disconnected before the power supply is energized, or

(e) A secondary calibrating pulse which is injected across the detection impedance by means of a capacitor having a capacitance not greater than 2000 picofarads. In this case, the amplitude of secondary pulse response shall be precalibrated against the primary calibrating circuit before the latter circuit is disconnected and the power supply is energized.

6.26.5 Test Procedure. The partial-discharge test shall be made prior to the alternating-current voltage test.

An alternating-current test voltage having a frequency between 49 and 61 hertz shall be applied between the conductor and the metallic component of the insulation shield. The applied voltage shall be raised sufficiently to indicate detector response to partial discharge but shall not exceed the alternating-current test voltage. The voltage shall then be lowered at a rate not more than 2000 volts per second to determine the partial-discharge extinction level (see 6.26.2.1).

If the existence of discharges is not evident after the voltage has been raised to a value of 20 percent above the specified minimum extinction value, the cable shall be considered to have met the requirements for this test.

The applied voltage shall not be maintained for more than 3 minutes during any single test.

6.26.6 System Response Verification

6.26.6.1 *Pulse Generator.* A two-pulse generator (see Fig. 6-5) shall be used to calibrate the

Copyright National Electrical Manufacturers Association
Provided by IHS under license with NEMA
No reproduction or networking permitted without license from IHS
Not for Resale

partial-discharge measuring device for pulse resolution time and superposition characteristics. The pulse generator shall have these characteristics:

(a) Produces identical variably time-spaced 40-picocoulomb discharges (pulses).
(b) Time spacing variable from 1 to 100 microseconds.
(c) Maximum rise time of pulses—20 nanoseconds (rise time from 10 percent of peak value to 90 percent of peak value).
(d) Output impedance—1400 ohms ± 20 percent.

This device incorporates a stable trigger point developed by a 12-volt zener diode which triggers a small silicon rectifier (SCR). Thus, the first of the two pulses will occur at the same point on each successive positive half cycle of the 115-volt power source. A 2000-ohm variable resistor controls the charging rate of the 0.1-microfarad capacitor. The rate at which this capacitor charges, in turn, determines the interval between the change in state of the first tunnel diode and that of the second tunnel diode. Each time one of the tunnel diodes changes state, there is an extremely rapid voltage rise of about 400 millivolts, and with a 100-picofared output capacitor, a 40-picocoulomb charge is delivered into a low impedance load (the partial-discharge detector). The 6.2-volt zener diode is used only to limit the current applied to the tunnel diode, and the neon lamp across the output shunts large static charges which might remain on the detector power separation capacitor, thus preventing failure of the tunnel diodes. The output can be selected to be 4, 10, 20, or 40 picocoulombs according to which output capacitor is used.

The open-circuit output of the generator shall be measured using a suitable laboratory model oscilloscope having an input capacitance of 47 ± 3 picofarads. A decade resistance box shall be connected across the output terminal and its value adjusted until the output voltage is reduced to half value. The resulting resistance shall be 1400 ohms ± 20 percent and is the output impedance.

The generator shall be terminated in its output impedance with the same oscilloscope as above connected in parallel. The oscilloscope shall be adjusted to 0.02 microsecond per centimeter and 0.1 volt per centimeter. The time from 10 percent of peak to 90 percent of peak shall be considered the rise time. Rise time characteristics of the oscilloscope must be short, or they will interfere with the accuracy of the measurement.

6.26.6.2 *Auxiliary Oscilloscope.* An auxiliary oscilloscope having a time base of at least 5 microseconds per centimeter shall be used to determine pulse separation time.

6.26.6.3 *Verification Procedure.* Initially, and at least once a year thereafter, the pulse generator described in 6.26.6.1 shall be connected to inject pulses directly into the partial-discharge measuring device through the terminals to which cables being tested for partial discharges would normally be connected. The auxiliary oscilloscope shall be connected in parallel with the input to the partial-discharge measuring device. No cable shall be connected.

Pulse spacing shall be adjusted to maximum and synchronized to give a stationary display on the partial-discharge measuring device oscilloscope. The amplifier gain on the measuring device shall be adjusted to give a display height of 1 centimeter for the 40-picocoulomb pulses. Pulse spacing shall be varied without readjustment of amplifier gain and a graph plotted of pulse height versus pulse separation time. The auxiliary oscilloscope shall be used to determine pulse separation within ± 10 percent. Data points shall be plotted at 1-microsecond intervals up to 10-microsecond separation; at 10-microsecond intervals up to 50-microsecond separation; at 100 microseconds; and at the point of maximum negative superposition.

6.26.6.4 *Verification Requirements.* Negative superposition shall not exceed 15 percent. Pulse resolution time shall occur between 4 and 6 microseconds separation.

Copyright National Electrical Manufacturers Association
Provided by IHS under license with NEMA
No reproduction or networking permitted without license from IHS
Not for Resale

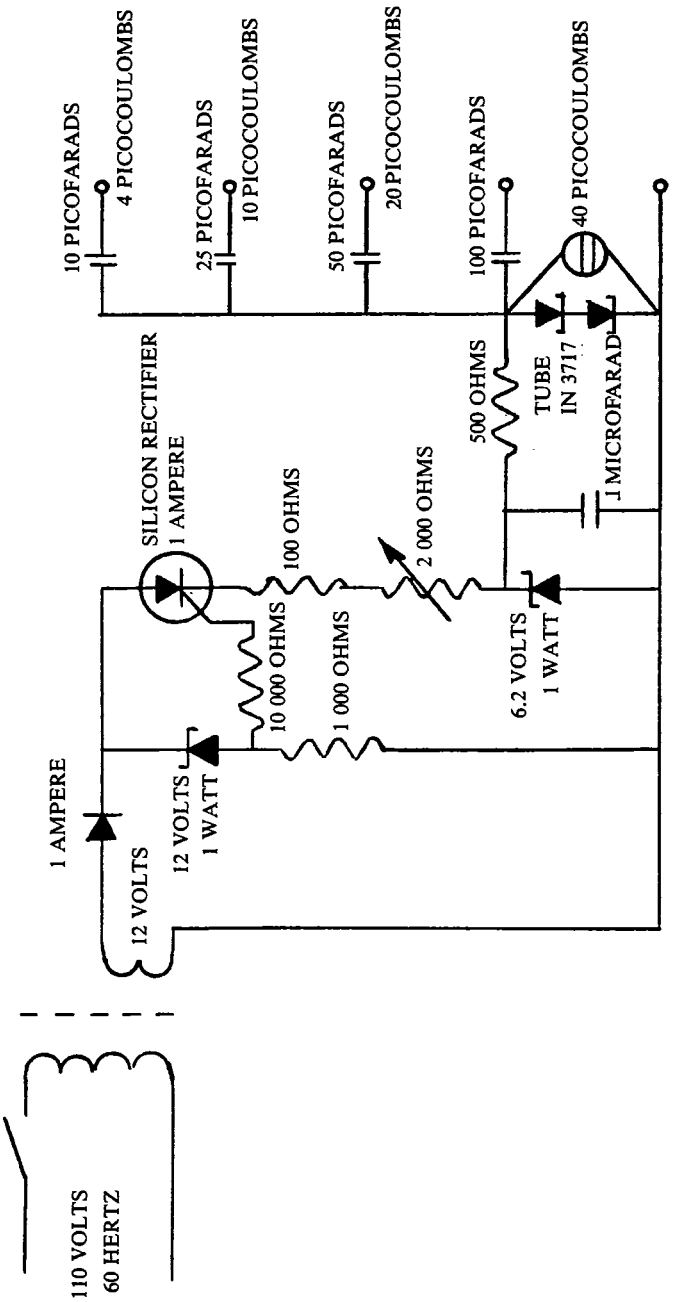

Fig. 6-5
Schematic Diagram for Variably Spaced Two-pulse Partial-discharge Detector Calibrator

Copyright National Electrical Manufacturers Association
Provided by IHS under license with NEMA
No reproduction or networking permitted without license from IHS
Not for Resale

2588

Part 7

CONSTRUCTIONS OF SPECIFIC TYPES

The requirements of Parts 1 through 6 shall be met except as otherwise modified in Part 7.

7.1 Rescinded 11-12-1981.

7.2 Mine Power Cables

7.2.1 Scope. This section covers heat-, moisture- and ozone-resisting rubber-insulated, three-conductor, cross-linked or thermosplastic-jacketed cables with grounding-condcutors in sizes 6 AWG through 500 kcmil for use as connections between units of mine distribution systems at nominal alternating-current voltages of 2001 to 1500 volts at 100 or 133% insulation level. These cables shall be of one of the following types:▲

▲Type MP—With three grounding conductors.

▲Type MP-GC—With two grounding conductors and one ground check conductor.

The insulation shall be suitable for operation at maximum conductor temperatures of 70°C or 85°C (see 7.2.3). ▲

Ampacities are given in Appendix I. Recommended minimum bending radii are given in Appendix H. ▲

7.2.2 Conductors

7.2.2.1 *Power Conductors.* Power conductors shall be Class B or C stranded annealed coated or uncoated copper or 3/4 hard aluminum 1350 and shall meet the requirements given in Part 2.

In addition, those power conductors used for borehole and shaft cables shall have a minimum factor of safety of 7 when calculated by the formula $F = AT/W$. If a minimum factor of safety as calculated by the formula is less than 7, medium hard-drawn copper in accordance with ASTM B 2 or B 246 before stranding shall be used. In no case shall the factor of safety be less than 7.

where—

F = Factor of safety.

▲A = Area of the three power conductors in square inches.

▲T = Tensile strength of conductor in pounds per square inch as tabulated below:

	psi
Annealed copper	24000
Medium hard copper	40000
aluminum 1350	17000

▲W = Weight of cable in pounds .

Table 7.2-1
Conductor Sizes

Size of Power Conductors, AWG or kcmil ▲		Copper Ground Conductors		Copper Ground Check Conductor, Minimum Size AWG
Copper	Aluminum	Type MP Cables, Size in Each Interstice, AWG	Type MP-GC Cables, Size in Each of Two Interstices, AWG	
6	4	10	10	10
4	2	8	8	8
2	1/0	8	6	8
1	2/0	7	5	8
1/0	3/0	6	4	8
2/0	4/0	5	3	8
3/0	250	4	2	8
4/0	350	3	1	8
250	400	2	1/0	8
300	450	1	1/0	8
350	500	1	2/0	8
400	...	1/0	3/0	8
450	...	1/0	3/0	8
500	...	2/0	4/0	8

▲Editorially revised.

Copyright National Electrical Manufacturers Association
Provided by IHS under license with NEMA
No reproduction or networking permitted without license from IHS
Not for Resale

The conductor size shall be in accordance with Table 7.2-1 and shall meet the requirements given in Part 2. When the size of medium hard-drawn copper power conductors is determined in accordance with 6.3.1, the direct-current resistance shall not exceed by more than 2 percent the values given in Table 7.2-4.

A conductor stress control layer in accordance with 2.7 shall be applied over each power conductor. ▲

7.2.2.2 *Grounding Conductors.* Grounding conductors shall be Class B or C stranded annealed coated copper wire and shall meet the requirements given in Part 2. The size of each grounding conductor shall be in accordance with Table 7.2-1.

7.2.2.3 *Ground Check Conductors.* The ground check conductor shall be Class B or C stranded annealed coated or uncoated copper of the minimum size shown in Table 7.2-1 and shall meet the requirements given in Part 2.

7.2.3 Insulation

7.2.3.1 *Power Conductors.* The insulation on the power conductors shall meet the requirements of 3.14 or 3.15. The average thickness shall be not less than that given in Tables 7.2-2 or 7.2-3. The minimum thickness shall be not less than 90 percent of these values.

7.2.3.2 *Ground Check Conductor.* The insulation on the ground check conductor shall be one of the types given in Part 3. The average thickness shall be not less than 45 mils (1.14 mm). The minimum thickness shall be not less than 41 mils (1.03 mm).

7.2.4 Insulation Shielding. Each power conductor shall be shielded in accordance with 4.1.

7.2.5 Identification. Power conductors shall be identified as black, white and red.

The ground check conductor shall be covered with a closely woven cotton or rayon braid which is colored yellow, or with a yellow colored insulation.

7.2.6 Conductor Assembly. The conductor assembly shall have a left-hand lay. A grounding conductor shall be placed in continuous contact with the metallic shields in each interstice of Type MP Cables and in two interstices of Type MP-GC Cables. The ground check conductor of Type MP-GC Cables shall be placed between the black and white conductors. Fillers of suitable material shall be used to produce an essentially round cross section in the completed cable. When required, a binder tape and/or threads shall be used over the conductor assembly.

7.2.7 Jacket. A cross-linked jacket which meets the requirements of 4.13.3, 4.13.8, 4.13.10, or 4.13.11 or a thermoplastic jacket which meets the requirements of 4.13.5 or 4.13.7 shall be applied over the conductor assembly. The average thickness of the jacket shall be not less than that given in Table 7.2-5 and the minimum thickness of the jacket shall be not less than 80 percent of these values. ●

7.2.8 Outside Diameters. The outside diameter of the completed cable shall be within plus 8 and minus 5 percent of the values given in Tables 7.2-2 and 7.2-3.

7.2.9 Tests. The cable shall meet the requirements specified in 7.2 when tested in accordance with Part 6. ▲

The insulated power conductors shall meet the test voltage and partial-discharge requirements given in Table 7.2-2 or 7.2-3.

The voltage test on the insulated ground check conductor shall be made between that conductor and the grounding conductors by applying an alternating-current voltage of 3.0 kV for insulations other than ozone resisting and 4.5 kV for ozone-resisting insulations. The duration of the tests shall be 15 seconds. The insulation resistance test is not required.

▲ Editorially revised.
● Revised 9-15-1983.

Copyright National Electrical Manufacturers Association
Provided by IHS under license with NEMA
No reproduction or networking permitted without license from IHS

Not for Resale

7.2 Mine Power Cables

7.2.1 Scope. This section covers heat-, moisture- and ozone-resisting rubber-insulated, three-conductor, thermosetting- or thermoplastic-jacketed cables with grounding-conductors in sizes 6 AWG through 500 MCM for use as connections between units of mine distribution systems at nominal alternating-current voltages of 2001 to 15000 volts. These cables shall be of one of the following types:

Type MP—With three grounding conductors.

Type MP-GC—With two grounding conductors and one ground check conductor.

The grades of insulation shall be suitable for operation at maximum conductor temperatures of 70 °C or 85 °C (see 7.2.3).

Ampacities are given in Appendix G. Recommended minimum bending radii are given in Appendix M.

7.2.2 Conductors

7.2.2.1 *Power Conductors.* Power conductors shall be Class B or C stranded annealed coated or uncoated copper of 3/4 hard-drawn aluminum 1350 and shall meet the requirements given in Part 2.

In addition, those power conductors used for borehole and shaft cables shall have a minimum factor of safety of 7 when calculated by the formula $F = AT/W$. If a minimum factor of safety as calculated by the formula is less than 7, medium hard-drawn copper in accordance with ASTM B 2 or B 246 before stranding shall be used. In no case shall the factor of safety be less than 7.

where—

F = Factor of safety.

A = Area of the three power conductors in square inches (square millimeters).

T = Tensile strength of conductor in pounds per square inch (MPa) =

	psi	MPa
Annealed copper	24000	165
Medium hard copper	40000	276
1350 aluminum	17000	117

W = Weight of cable in pounds (kg).

The conductor size shall be in accordance with Table 7.2-1 and shall meet the requirements given in Part 2. When the size of medium hard-drawn copper power conductors is determined in accordance with 6.3.2.3, the direct-current resistance shall not exceed by more than 2 percent the values given in Table 7.2-4.

Conductor shielding in accordance with 2.4 shall be applied over each power conductor.

Table 7.2-1
Conductor Sizes

Size of Power Conductors, AWG or MCM		Copper Ground Conductors		Copper Ground Check Conductor, Minimum Size AWG
Copper	Aluminum	Type MP Cables, Size in Each Interstice, AWG	Type MP-GC Cables, Size in Each of Two Interstices, AWG	
6	4	10	10	10
4	2	8	8	8
2	1/0	8	6	8
1	2/0	7	5	8
1/0	3/0	6	4	8
2/0	4/0	5	3	8
3/0	250	4	2	8
4/0	350	3	1	8
250	400	2	1/0	8
300	450	1	1/0	8
350	500	1	2/0	8
400	...	1/0	3/0	8
450	...	1/0	3/0	8
500	...	2/0	4/0	8

Copyright National Electrical Manufacturers Association
Provided by IHS under license with NEMA
No reproduction or networking permitted without license from IHS

Not for Resale

7.2.2.2 *Grounding Conductors.* Grounding conductors shall be Class B or C stranded annealed coated copper wire and shall meet the requirements given in Part 2. The size of each grounding conductor shall be in accordance with Table 7.2-1.

7.2.2.3 *Ground Check Conductors.* The ground check conductor shall be Class B or C stranded annealed coated or uncoated copper of the minimum size shown in Table 7.2-1 and shall meet the requirements given in Part 2.

7.2.3 Insulation

7.2.3.1 *Power Conductors.* The insulation on the power conductors shall meet the requirements of 3.14 or 3.15. The average thickness shall be not less than that given in Tables 7.2-2 or 7.2-3. The minimum thickness shall be not less than 90 percent of these values.

7.2.3.2 *Ground Check Conductor.* The insulation on the ground check conductor shall be one of the types given in Part 3. The average thickness shall be not less than 45 mils (1.14 mm). The minimum thickness shall be not less than 41 mils (1.03 mm).

7.2.4 Insulation Shielding. Each power conductor shall be shielded in accordance with 4.1.

7.2.5 Identification. Power conductors shall be identified as black, white and red.

The ground check conductor shall be covered with a closely woven cotton or rayon braid which is colored yellow, or with a yellow colored insulation.

7.2.6 Conductor Assembly. The conductor assembly shall have a left-hand lay. A grounding conductor shall be placed in continuous contact with the metallic shields in each interstice of Type MP Cables and in two interstices of Type MP-GC Cables. The ground check conductor of Type MP-GC Cables shall be placed between the black and white conductors. Fillers of suitable material shall be used to produce an essentially round cross section in the completed cable. When required, a binder tape and/or threads shall be used over the conductor assembly.

7.2.7 Jacket. A thermosetting jacket which meets the requirements of 4.13.3, 4.13.7 or 4.13.9 or a thermoplastic jacket which meets the requirements of 4.13.5 shall be applied over the conductor assembly. The average thickness of the jacket shall be not less than that given in Table 7.2-5 and the minimum thickness of the jacket shall be not less than 80 percent of these values.

7.2.8 Outside Diameters. The outside diameter of the completed cable shall be within plus 8 and minus 5 percent of the values given in Tables 7.2-2 and 7.2-3.

7.2.9 Tests. The cable shall be tested in accordance with Part 6 and shall meet the requirements specified in 7.2.

The insulated power conductors shall meet the test voltage and partial-discharge requirements given in Table 7.2-2 or 7.2-3.

The voltage test on the insulated ground check conductor shall be made between that conductor and the grounding conductors by applying an alternating-current voltage of 3.0 kV for insulations other than ozone resisting and 4.5 kV for ozone-resisting insulations. The duration of the tests shall be 15 seconds. The insulation resistance test is not required.

Copyright National Electrical Manufacturers Association
Provided by IHS under license with NEMA
No reproduction or networking permitted without license from IHS

Not for Resale

Table 7.2-2
Insulation Thicknesses and Outside Diameters

Conductor Size, AWG or MCM	100 and 133 Percent Insulation Level (Grounded and Ungrounded Neutral)						
	Insulation Thickness		Outside Diameter		Test Voltage, kV		Minimum Partial-discharge Extinction Level, kV†
	mils	mm	inches	mm	a-c	d-c	
	2001 to 5000 VOLTS*						
6	155	3.94	1.49	37.8	13	35	4.0
4	155	3.94	1.60	40.6	13	35	4.0
2	155	3.94	1.74	44.2	13	35	4.0
1	155	3.94	1.85	47.0	13	35	4.0
1/0	155	3.94	1.94	49.3	13	35	4.0
2/0	155	3.94	2.05	52.1	13	35	4.0
3/0	155	3.94	2.16	54.9	13	35	4.0
4/0	155	3.94	2.29	58.2	13	35	4.0
250	170	4.32	2.52	64.0	13	35	4.0
300	170	4.32	2.63	66.8	13	35	4.0
350	170	4.32	2.74	69.6	13	35	4.0
400	170	4.32	2.84	72.1	13	35	4.0
450	170	4.32	2.94	74.7	13	35	4.0
500	170	4.32	3.03	77.0	13	35	4.0

*The actual operating voltage shall not exceed the rated circuit voltages by more than (a) 5 percent during continuous operation or (b) 10 percent during emergencies lasting not more than 15 minutes.

†Unless otherwise indicated, the cable shall be rated at 100 percent insulation level.

Copyright National Electrical Manufacturers Association
Provided by IHS under license with NEMA
No reproduction or networking permitted without license from IHS

Not for Resale

Copyright National Electrical Manufacturers Association
Provided by IHS under license with NEMA
No reproduction or networking permitted without license from IHS
2594
Not for Resale

6470247 0004761 3

Table 7.2-3
Insulation Thicknesses and Outside Diameters

Conductor Size, AWG or MCM	100 Percent Insulation Level (Grounded Neutral)							133 Percent Insulation Level (Ungrounded Neutral)						
	Insulation Thickness		Outside Diameter		Test Voltage, kV		Minimum Partial-discharge Extinction Level, kV	Insulation Thickness		Outside Diameter		Test Voltage, kV		Minimum Partial-discharge Extinction Level, kV
	mils	mm	inches	mm	a-c	d-c		mils	mm	inches	mm	a-c	d-c	
5001 TO 8000 VOLTS*														
6	190	4.83	1.65	41.9	18	45	6.0	250	6.35	1.95	49.5	22	55	8.0
4	190	4.83	1.75	44.5	18	45	6.0	250	6.35	2.05	52.1	22	55	8.0
2	190	4.83	1.92	48.8	18	45	6.0	250	6.35	2.18	55.4	22	55	8.0
1	190	4.83	2.03	51.6	18	45	6.0	250	6.35	2.30	58.4	22	55	8.0
1/0	190	4.83	2.12	53.8	18	45	6.0	250	6.35	2.42	61.5	22	55	8.0
2/0	190	4.83	2.22	56.4	18	45	6.0	250	6.35	2.52	64.0	22	55	8.0
3/0	190	4.83	2.33	59.2	18	45	6.0	250	6.35	2.62	66.5	22	55	8.0
4/0	190	4.83	2.48	63.0	18	45	6.0	250	6.35	2.75	69.9	22	55	8.0
250	190	4.83	2.58	65.5	18	45	6.0	250	6.35	2.85	72.4	22	55	8.0
300	190	4.83	2.70	68.6	18	45	6.0	250	6.35	2.97	75.4	22	55	8.0
350	190	4.83	2.81	71.4	18	45	6.0	250	6.35	3.08	78.2	22	55	8.0
400	190	4.83	2.91	73.9	18	45	6.0	250	6.35	3.18	80.8	22	55	8.0
450	190	4.83	3.01	76.5	18	45	6.0	250	6.35	3.28	83.3	22	55	8.0
500	190	4.83	3.10	78.7	18	45	6.0	250	6.35	3.37	85.6	22	55	8.0
8001 TO 15000 VOLTS*														
2	295	7.49	2.42	61.5	27	70	11.0	...	...	...	...	...	...	...
1	295	7.49	2.53	64.3	27	70	11.0	420	10.67	3.07	78.0	33	80	15.0
1/0	295	7.49	2.62	66.5	27	70	11.0	420	10.67	3.16	80.3	33	80	15.0
2/0	295	7.49	2.74	69.6	27	70	11.0	420	10.67	3.26	82.8	33	80	15.0
3/0	295	7.49	2.83	71.9	27	70	11.0	420	10.67	3.37	85.6	33	80	15.0
4/0	295	7.49	2.95	74.9	27	70	11.0	420	10.67	3.52	89.4	33	80	15.0
250	295	7.49	3.05	77.5	27	70	11.0	...	...	...	...	...	...	...
300	295	7.49	3.17	80.5	27	70	11.0	...	...	...	...	...	...	...
350	295	7.49	3.28	83.3	27	70	11.0	...	...	...	...	...	...	...
400	295	7.49	3.42	86.9	27	70	11.0	...	...	...	...	...	...	...
450	295	7.49	3.51	89.2	27	70	11.0	...	...	...	...	...	...	...
500	295	7.49	...	...	27	70	11.0	...	...	...	...	...	...	...

*The actual operating voltage shall not exceed the rated circuit voltages by more than (a) 5 percent during continuous operation or (b) 10 percent during emergencies lasting not more than 15 minutes.

Table 7.2-4
Nominal Direct-current Resistance of Medium Hard-drawn Coated and Uncoated Copper Conductors, Concentric Stranded, Class B and C

Conductor Size, AWG or kcmil ▲	Class of Stranding	Coated Copper				Uncoated Copper			
		20 °C		25 °C		20 °C		25 °C	
		ohms per 1000 feet	ohms per km	ohms per 1000 feet	ohms per km	ohms per 1000 feet	ohms per km	ohms per 1000 feet	ohms per km
6	B and C	0.436	1.43	0.444	1.46	0.417	1.37	0.425	1.40
4	B and C	0.274	0.899	0.279	0.917	0.262	0.860	0.267	0.877
2	B and C	0.172	0.565	0.176	0.577	0.165	0.541	0.168	0.552
1	B and C	0.137	0.448	0.139	0.457	0.131	0.429	0.133	0.437
1/0	B and C	0.108	0.355	0.110	0.362	0.104	0.340	0.106	0.347
2/0	B and C	0.0859	0.282	0.0876	0.287	0.0822	0.270	0.0838	0.275
3/0	B and C	0.0681	0.224	0.0695	0.228	0.0652	0.214	0.0665	0.218
4/0	B	0.0536	0.176	0.0547	0.179	0.0517	0.170	0.0527	0.173
4/0	C	0.0540	0.177	0.0551	0.181	0.0517	0.170	0.0527	0.173
250	B and C	0.0457	0.150	0.0466	0.153	0.0438	0.144	0.0446	0.146
300	B and C	0.0381	0.125	0.0389	0.128	0.0365	0.120	0.0372	0.122
350	B and C	0.0327	0.107	0.0333	0.109	0.0313	0.103	0.0319	0.105
400	B	0.0284	0.0931	0.0289	0.0949	0.0274	0.0898	0.0279	0.0915
400	C	0.0286	0.0938	0.0292	0.0956	0.0274	0.0898	0.0279	0.0915
450	B	0.0252	0.0827	0.0257	0.0844	0.0243	0.0798	0.0248	0.0813
450	C	0.0254	0.0834	0.0259	0.0850	0.0243	0.0798	0.0248	0.0813
500	B	0.0227	0.0745	0.0231	0.0759	0.0219	0.0718	0.0223	0.0732
500	C	0.0229	0.0750	0.0233	0.0765	0.0219	0.0718	0.0223	0.0732

Table 7.2-5
Jacket Thickness

Calculated Diameter of Cable Under Jacket		Jacket Thickness	
inches	mm	mils	mm
1.500 or less	38.10 or less	110	2.79
1.501—2.500	38.13—63.50	140	3.56
2.501—3.500	63.53—88.90	170	4.32

▲Editorially revised.

Copyright National Electrical Manufacturers Association
Provided by IHS under license with NEMA
No reproduction or networking permitted without license from IHS

Not for Resale

7.3 Preassembled Aerial Cables

7.3.1 Scope. This section covers preassembled aerial cables with one or more conductors which are individually insulated with a rubber compound and covered and which are attached to a messenger to form self-supporting aerial cables for use on power transmission and distribution systems operating at 15 kV or less phase to phase.

The characteristics of the completed assembly shall be such that the cable can be installed at a minimum temperature of minus 10°C (14°F).

Ampacities and recommended minimum bending radii are given in Appendices M and H, respectively. ▲

7.3.2 Conductors

7.3.2.1 *Copper.* The conductors shall be annealed coated copper in accordance with Part 2 in sizes 6 AWG to 750 kcmil within the size limits applying to rated circuit voltage and cable constructions given in 7.3.7. The conductors shall be Class B or Class C stranded in accordance with Part 2 except that, when required, size 6 AWG may be solid. For ratings above 2000 volts, each conductor shall be covered with conductor shielding in accordance with 2.4. ▲

7.3.2.2 *Aluminum.* The conductors shall be uncoated aluminum 1350 in accordance with Part 2 in sizes 6 AWG to 750 kcmil within the size limits applying to rated circuit voltages and cable constructions given in 7.3.7. The conductors shall be Class B or Class C stranded in accordance with Part 2. For ratings above 2000 volts, each conductor shall be covered with conductor shielding in accordance with 2.4. ▲

7.3.3 Insulation. The insulation shall be applied in accordance with the applicable sections of Part 3. The average thickness of the insulation shall be not less than that given in Table 3-2. The minimum thickness shall be not less than 90 percent of the values given in the table.

For cables rated 2000 volts or less, the insulation shall be one of the grades given in Table 3-1. For cables rated above 2000 volts, the insulation shall be in accordance with 3.14 or 3.15.

7.3.4 Coverings. The three types of cables listed in Table 7.3-1 shall be covered in accordance with 7.3.4.1 through 7.3.4.3.

7.3.4.1 *Type I.* One of the jackets listed in Table 7.3-5 and meeting the requirements of Table 4-15 shall be applied over the insulation of each conductor. The jacket on cables rated 2001-5000 volts shall meet the requirements of 4.13.14. ● ▲

7.3.4.2 *Type II.* A fibrous or other non-metallic covering shall be applied over the insulation of each conductor. The covering shall be either conducting or nonconducting and, if conducting, shall be plainly identified. An additional covering, either conducting or nonconducting, may be applied over the first one but, if the first covering is conducting, the additional one shall also be conducting. Over the covering(s), a helically wrapped nonmagnetic stainless steel, non-magnetic monel, or bronze shielding tape having a thickness of at least 4.5 mils (0.114 mm) shall be applied with a lap of not less than 15 percent of its width.

7.3.4.3 *Type III.* A fibrous or other non-metallic covering shall be applied over the insulation of each conductor. The covering shall be either conducting or nonconducting and, if conducting, shall be plainly identified. An additional covering, either conducting or nonconducting, may be applied over the first one but, if the first covering is conducting, the additional one shall also be conducting. Over the covering(s), a helically wrapped metallic shielding which meets the requirements of 4.1.1.1 or 4.1.1.3 shall be applied. A fibrous tape which meets the requirements of 4.4 may be applied over the shielding. One of the jackets listed in Table 7.3-5 and meeting the requirements of Table 4-16 shall be applied over the shielding or, if used, over the fibrous tape.

Table 7.3-1

Type	Description	Maximum Rated Circuit Voltage, Phase to Phase, kV 100 and 133 Percent Insulation Level (Grounded and Ungrounded Neutral)
I	Nonshielded, jacketed	5
II	Shielded, nonjacketed	15
III	Shielded, jacketed	15

▲ Editorially revised.
● Revised 9-15-1983.

Copyright National Electrical Manufacturers Association
Provided by IHS under license with NEMA
No reproduction or networking permitted without license from IHS

Not for Resale

WC 3-80 6470247 0004764 7

Table 7.3-2

Diameter of Cable Assembly, Excluding Messenger		Binding Strip			
		Thickness		Width	
inches	mm	mils	mm	mils	mm
up to 1.000▲	up to 25.40▲	25	0.64	250	6.35
1.001 and over	25.43 and over	30	0.76	375	9.53

Table 7.3-3

Conductor Size, AWG or kcmil▲	Messenger Size					
	Cable Voltage Rating and Power Conductor Material					
	Up to 5 kV, Inclusive 100 and 133 Percent Insulation Level (Grounded and Ungrounded Neutral)		Over 5 to 15 kV 100 Percent Insulation Level (Grounded Neutral) and Over 5 to 10 kV 133 Percent Insulation Level (Ungrounded Neutral)		Over 10 to 15 kV 133 Percent Insulation Level (Ungrounded Neutral)	
	Copper	Aluminum	Copper	Aluminum	Copper	Aluminum
			Single Conductor			
6*	6D	6D	6D	6D	...	...
4*	4D	6D	4D	6D	...	...
2*	2J	4D	2J	4D	...	...
			Two and Three Conductor			
6*	5/16	5/16	5/16	5/16	...	...
4*	5/16	5/16	5/16	5/16	...	...
2*	5/16	5/16	3/8	3/8	...	...
1	5/16	5/16	3/8	3/8	1/2	1/2
1/0	5/16	5/16	3/8	3/8	1/2	1/2
2/0	3/8	5/16	1/2	3/8	1/2	1/2
3/0	3/8	5/16	1/2	1/2	9/16	1/2
4/0	1/2	5/16	1/2	1/2	9/16	1/2
350	9/16	3/8	9/16	1/2	...	...
500	9/16	1/2	9/16	9/16	...	...
750	9/16†	1/2	...	...	...	...

*See limits on conductor size in Table 3-2.
†See 7.3.8.

Table 7.3-4

Loading Condition	Maximum Tension, Percent of Ultimate Strength
Heavy Loading	50
1/2 inch (12.7 mm) ice, 4 lb/sq ft (192 Pa) wind force, 0°F (-17.8°C)	
Normal Loading	30
No ice, no wind, 60°F (15.6°C)	

Table 7.3-5 ●

Jacket Material	See par.
Neoprene, heavy-duty black	4.13.3
Polyvinyl chloride	4.13.5
Polyethylene, black	4.13.6
Chlorinated polyethylene, thermoplastic	4.13.7
Nitrile butadiene/polyvinyl chloride, heavy duty	4.13.8
Chlorosulfonated, polyethylene, heavy duty	4.13.10
Chlorinated polyethylene, heavy duty, crosslinked	4.13.11

Copyright National Electrical Manufacturers Association
Provided by IHS under license with NEMA
No reproduction or networking permitted without license from IHS
Not for Resale

▲**7.3.5 Conductor Identification.** Each conductor of multiple-conductor cable shall be permanently marked so that conductor identification may be made without exposing the insulation.

Single-conductor cable need not be identified.

Jacketed cables shall be identified to indicate the manufacturer.

7.3.6 Assembly. The conductors shall be cabled together with a suitable lay. The messenger shall be laid parallel to the axis of a single conductor or the cabled conductors. The cabled conductors shall be bound to the messenger by means of a soft-copper binding strip. The binding strip shall have a pitch of from 3 to 6 inches (76.2 to 152.4 mm), shall be rectangular with rounded edges, and the nominal dimensions shall be not less than those shown in Table 7.3-2.

The messenger shall extend 5 feet (1.52 meters) beyond each end of the conductors for use in installing the cable.

7.3.7 Messenger Sizes. The messenger shall be either composite stranded copper and copper-covered steel in accordance with ASTM B 229, or Grade 30 EHS stranded copper-covered steel in accordance with ASTM B 228. The 9/16-inch size is based on the use of the 19-wire construction rather than the 7-wire for added strength and flexibility.

The messenger sizes shall be as shown in Table 7.3-3. These sizes are expressed as designations for single-conductor cables and as messenger diameters in inches for multiple-conductor cables.

7.3.8 Design Criteria.* The messenger size should be based on a normal stringing tension at 60°F (15.6°C) not exceeding 30 percent of the ultimate strength and a maximum tension not exceeding 50 percent of the ultimate strength at a heavy loading condition. For further information, see *National Electrical Safety Code*, ANSI Publication No. C2.

▲The messenger sizes tabulated in 7.3.7 are of sufficient strength, except for the 750-kcmil copper cable, to permit installation of the cables on the basis of a 150-foot (45.7-meter) ruling span with a maximum normal sag of 2.5 feet (0.76 meter) at 60°F (15.6°C), no ice, no wind, and without exceeding the tension limits given in Table 7.3-4.

▲For the 750-kcmil copper cable, the span should be limited to 125 feet (38.1 meters) to satisfy this design criteria.

For single-phase circuits using the messenger as the grounded neutral conductor, the resistance of the messenger should be not greater than that of the conductor.

* This paragraph is approved by NEMA as Authorized Engineering Information.

▲ **7.3.9 Tests.** Cables shall meet the requirements specified in 7.3 when tested in accordance with Part 6.

▲Editorially revised.

Copyright National Electrical Manufacturers Association
Provided by IHS under license with NEMA
No reproduction or networking permitted without license from IHS

Not for Resale

7.4 Neutral-supported Secondary and Service Drop Cables

7.4.1 Scope. This section covers secondary and service drop cables composed of one or more neoprene-insulated conductors and one neutral conductor for use as the supporting member. These cables are for use on circuits not exceeding 600 volts phase to phase and at conductor temperatures not exceeding 75°C (167°F).

7.4.2 Conductors

7.4.2.1 *Insulated Conductors*

▲ **7.4.2.1.1** Copper. Conductors shall be annealed uncoated copper and shall meet the requirements given in Part 2. Size 8 AWG shall be solid or Class B stranded in accordance with Table 2-7. Sizes 6 AWG and larger shall be Class B stranded in accordance with Table 2-7.

▲ **7.4.2.1.2** Aluminum. Conductors shall be aluminum 1350 with a minimum tensile strength of 17,000 psi (117 MPa). Sizes 6 and 4 AWG shall be solid in accordance with ASTM B230 or ASTM B609 before insulating and with Table 2-7, Class A or B stranded in accordance with ASTM B400. Sizes larger than 4 AWG shall be Class A or B stranded in accordance with ASTM B231 or compact round stranded in accordance with ASTM B400.

7.4.2.1.3 Direction of Lay. The direction of lay of the outer layer of stranded conductors shall be left hand or right hand.

7.4.2.2 *Neutral Conductors.* Neutral conductors shall be uncovered or covered, and the sizes and composition shall be in accordance with Table 7.4-1.

▲ **7.4.2.2.1** Copper. Conductors shall be hard-drawn uncoated copper and shall meet the requirements of ASTM B1 and B8. Sizes 2 AWG and smaller shall be solid or Class B stranded in accordance with Table 2-7. Sizes larger than 2 AWG shall be Class B stranded in accordance with Table 2-7.

7.4.2.2.2 Aluminum. Conductors shall be hard-drawn aluminum 1350, Class A stranded, except sizes 3/0 and 4/0 AWG shall be 19-wire stranded, and shall meet the requirements of ASTM B 231.

7.4.2.2.3 Copper and Copper-covered-steel Composite. Conductors shall be concentric-lay stranded copper and copper-covered steel composite conductors and shall meet the requirements given in the applicable sections of ASTM B 229.

7.4.2.2.4 Aluminum Conductors—Steel Reinforced. Aluminum conductors steel reinforced (ACSR), shall be seven-wire strand (six aluminum around one steel) and shall meet the requirements of ASTM B 232.

7.4.2.2.5 Aluminum Alloy Conductors—5005-H19. Conductors shall be seven-wire strand in accordance with ASTM B 397.

Table 7.4-1
Power and Neutral Conductors

Insulated Power Conductor Sizes, AWG		Neutral Conductor Sizes, AWG			
		For Use With Copper or Aluminum Insulated Power Conductors		For Use With Aluminum Insulated Power Conductors Only	
Copper	Aluminum	Copper	Copper Covered Steel*	Alloy 1350	ACSR 5005-H19 6201-T81
8	6	8	8C	6	6
6	4	6	6C	4	4
6	4	8	8C	...	6
4	2	4	4A	2	2
4	2	6	6C	...	4
2	1/0	2	2F	1/0	1/0
2	1/0	4	4A	...	2
1	2/0	1	1F	2/0	2/0
1	2/0	3	3A	...	1
1/0	3/0	1/0	1/0F	3/0	3/0
1/0	3/0	2	2F	...	1/0
2/0	4/0	2/0	2/0F	4/0	4/0
2/0	4/0	1	1F	...	2/0

*See ASTM B 229 for letter designations and construction.
▲Editorially revised.

Copyright National Electrical Manufacturers Association
Provided by IHS under license with NEMA
No reproduction or networking permitted without license from IHS
Not for Resale

7.4.2.2.6 Aluminum Alloy Conductors—6201-T81. Conductors shall be seven-wire strand in accordance with ASTM B 399.

7.4.3 Insulation—Physical and Aging Requirements. The neoprene insulation shall be black and, when tested in accordance with Part 6, shall meet the following requirements:

Physical requirements	
Tensile strength, minimum	
psi	1200
▲MPa	8.28
Elongation at rupture, minimum, percent	250
Set, maximum, percent	20
Aging requirements	
After air oven test at 70°C ± 1°C for 168 hours	
Tensile strength, minimum, percentage of unaged value	75
Elongation at rupture, minimum, percentage of unaged value	65
After oxygen pressure test at 70°C ± 1°C for 96 hours	
Tensile strength, minimum percentage of unaged value	75
Elongation at rupture, minimum, percentage of unaged value	65
After oil immersion test at 121°C ± 1°C for 18 hours	
Tensile strength and elongation at rupture, minimum, percentage of unaged value	60

7.4.3.1 *Thickness of Insulation.* The average thickness of the insulation shall be not less than the following:

Conductor Size, AWG	Thickness	
	mils	mm
8–2	60	1.52
1–4/0	80	2.03

The minimum thickness shall be not less than 90 percent of the foregoing values.

7.4.4 Assembly. One or more insulated conductors shall be twisted around the neutral conductor without fillers with a lay of 25 to 60 times the diameter of one of the insulated conductors. The direction of lay shall be the same as that of the outer layer of wires of the neutral conductor.

The size of the neutral conductor shall be in accordance with Table 7.4-1.

▲7.4.5 Tests (See Part 6). The cable shall meet the requirements specified in 7.4 except that each length of completed cable shall successfully withstand, after 1 hour's immersion in water, an alternating-current voltage of 1500 volts applied for 1 minute between each insulated power conductor and ground.

▲Editorially revised.

Copyright National Electrical Manufacturers Association
Provided by IHS under license with NEMA
No reproduction or networking permitted without license from IHS

Not for Resale

7.5 Portable Arc-welding Cables

7.5.1 Scope. This section covers single-conductor portable electrode holder or trailing cables with a heavy-duty or medium-duty jacket. These cables are distinguished by the requirements for the jackets given in 7.5.4. They are of the following types.

Type A—With aluminum conductor
Type B—With copper conductor

7.5.2 Conductors. The conductor shall be rope-lay stranded with bunch-stranded members. The number of wires in the completed conductor shall be not less than 98 percent of the values given in 7.5.5.

The size of conductors shall be determined in accordance with 6.3. When the method described in 6.3.1 is used, the direct-current resistance shall not exceed by more than 2 percent the values given in Table 7.5-1. ▲

▲ **7.5.2.1** *Aluminum.* The nominal size of the individual wires in the conductors shall be 30 AWG. The wires, prior to stranding, shall be ¾ hard aluminum 1350 which meets the requirements of Part 2 except that the tensile strength shall be not less than 15,000 psi (103 MPa).

7.5.2.2 *Copper.* The nominal size of the individual wires in the conductor shall be 34 AWG. The wires, prior to stranding, shall be annealed uncoated copper which meets the requirements of Part 2.

7.5.3 Separator. A separator shall be applied directly over the conductors.

Table 7.5-1
Nominal Direct-current Resistance of Aluminum and Annealed Uncoated Copper Conductors of Portable Arc-welding Cable

	20°C				25°C			
	Aluminum		Copper		Aluminum		Copper	
Conductor Size, AWG	ohms per 1000 feet	ohms per km	ohms per 1000 feet	ohms per km	ohms per 1000 feet	ohms per km	ohms per 1000 feet	ohms per km
6	0.674	2.21	0.415	1.36	0.687	2.26	0.423	1.39
4	0.424	1.39	0.261	0.856	0.432	1.42	0.266	0.873
3	0.339	1.11	0.209	0.685	0.346	1.14	0.213	0.699
2	0.269	0.883	0.166	0.543	0.274	0.900	0.169	0.554
1	0.213	0.700	0.131	0.431	0.218	0.714	0.134	0.439
1/0	0.169	0.555	0.104	0.342	0.172	0.566	0.106	0.348
2/0	0.135	0.444	0.0834	0.274	0.138	0.453	0.0850	0.279
3/0	0.107	0.352	0.0661	0.217	0.110	0.360	0.0674	0.221
4/0	0.0852	0.279	0.0524	0.172	0.0869	0.285	0.0535	0.175

Copyright National Electrical Manufacturers Association
Provided by IHS under license with NEMA orially revised
No reproduction or networking permitted without license from IHS
Not for Resale

7.5.4 Jackets

▲ **7.5.4.1** *Heavy-duty Jackets.* The jacket shall be a natural rubber, or an SBR synthetic rubber, or a neoprene rubber, or a nitrile-butadiene/polyvinyl-chloride compound, or a crosslinked chlorinated polyethylene compound which, when tested in accordance with Part 6, shall meet the applicable following requirements. The jackets shall be applied in one or two layers. If reinforcement is required in two-layer jackets, it shall be applied between the two layers.

	Natural Rubber	SBR	Neoprene	Nitrile-butadiene/ polyvinyl-chloride*	Chlorinated Polyethylene, Crosslinked
Physical requirements					
Tensile strength, minimum					
psi	3500	1800	1800	1800	1800
MPa	24.1	12.4	12.4	12.4	12.4
Tensile stress at 200 percent elongation, minimum					
psi	500	...	500	500	500
MPa	3.45	...	3.45	3.45	3.45
Elongation at rupture, minimum, percent	500	300	300	300	300
Set, maximum, percent	15	20	20	30	30
Tear resistance, minimum					
pounds per inch	40	...	...	...	...
kN/m	7.01	...	...	...	...
Aging requirements					
Tensile strength, minimum percentage of unaged value		...	...	50	85
After air oven test at 100°C ± 1°C for 168 hours–tensile strength and elongation at rupture, minimum, percentage of unaged value	...	...	50	...	55
After air oven test at 70°C ± 1°C for 168 hours					
Tensile strength, minimum					
psi	...	1600	...	...	...
MPa	...	11.0	...	...	...
Elongation at rupture, minimum, percent	...	250	...	...	...
After air pressure heat test at 127°C ± 1°C for 20 hours–tensile strength and elongation at rupture, minimum, percentage of unaged value	...	...	...	50	...
After oxygen pressure test at 70°C ± 1°C for 96 hours					
Tensile strength, minimum					
psi	2500	1600	...	...	...
MPa	17.2	11.0	...	...	...
Elongation at rupture, minimum, percent	400	250	...	...	...
After oxygen pressure test at 80°C ± 1°C for 168 hours–tensile strength and elongation at rupture, minimum, percentage of unaged value	...	...	...	50	...
After oil immersion test at 121°C ± 1°C for 18 hours–tensile strength and elongation, minimum, percentage of unaged value	...	...	60	60	60

* Suitable for a minimum temperature of minus 10°C (plus 14°F).

▲Revised 9-15-1983.

Copyright National Electrical Manufacturers Association
Provided by IHS under license with NEMA
No reproduction or networking permitted without license from IHS

Not for Resale

▲ **7.5.4.2** *Medium-duty Jackets.* The jacket shall be an SBR synthetic rubber or neoprene rubber or a nitrile-butadiene/polyvinyl-chloride compound, or crosslinked chlorinated polyethylene compound which, when tested in accordance with Part 6, shall meet the applicable following requirements.

	SBR	Neoprene	Nitrile-butadiene/polyvinyl-chloride*	Chlorinated Polyethylene, Crosslinked
Physical requirements				
Tensile strength, minimum				
psi	1200	1200	1500	1500
MPa	8.27	8.27	10.3	10.3
Elongation at rupture, minimum, percent	250	250	250	300
Set, maximum, percent	...	20	30	35
Aging requirements				
After air oven tests at 100°C ± 1°C for 168 hours–tensile strength and elongation at rupture, minimum, percentage of unaged value	...	50	...	55
After oxygen pressure test at 70°C ± 1°C for 48 hours				
Tensile strength, minimum				
psi	1000	...	...	...
MPa	6.89	...	...	...
Elongation at rupture, minimum, percent	100	...	...	...
After oxygen pressure test at 80°C ± 1°C for 168 hours–tensile strength and elongation at rupture, minimum, percentage of unaged value	...	...	50	...
After air pressure heat test at 127°C ± 1°C for 20 hours–tensile strength and elongation at rupture, minimum, percentage of unaged value	...	...	50	...
After oil-immersion test at 121°C ± 1°C for 18 hours–tensile strength and elongation, minimum, percentage of unaged value	...	60	60	60

* Suitable for a minimum temperature of minus 10°C (plus 14°F).

7.5.5 Number of Wires, Outside Diameters, and Diameter Tolerances. The nominal number of wires, outside diameters and diameter tolerances shall be as follows.

Conductor Size, AWG	Nominal Number of Wires		Outside Diameters		Diameter Tolerances, Plus and Minus, Inches
	Aluminum	Copper	inches	mm	
6	266	665	0.390	9.91	0.020
4	420	1064	0.450	11.4	0.020
3	532	1323	0.480	12.2	0.020
2	665	1666	0.550	14.0	0.030
1	836	2107	0.600	15.2	0.030
1/0	1064	2646	0.660	16.8	0.030
2/0	1323	3325	0.730	18.5	0.040
3/0	1666	4256	0.800	20.3	0.040
4/0	2107	5320	0.870	22.1	0.040

▲Revised 9-15-1983.

Copyright National Electrical Manufacturers Association
Provided by IHS under license with NEMA
No reproduction or networking permitted without license from IHS
Not for Resale

7.6 Portable Single- and Multiple-conductor Power Cables

7.6.1 Scope. This section covers rubber-insulated portable cables with copper conductors in sizes 8 AWG and larger and with heavy-duty or extra-heavy-duty nitrile butadiene/polyvinyl chloride* or neoprene jackets or heavy-duty neoprene jackets for use on mining machines, dredges, shovels and in similar applications. These cables are distinguished by the requirements for the jackets given in 7.6.19.

Cables with heavy-duty jackets are limited to a maximum outside diameter of 2.00 inches (50.8 mm) and do not include Types SH and SHD.

Details of construction and dimensions for the voltage services at which these cables may be used are given in Tables 7.6-2 to 7.6-13, inclusive. Recommended ampacities and voltage ratings are given in Appendix J. Recommended bending radii are given in Appendix H. ▲

* Suitable for a minimum temperature of -10°C ($+14^{\circ}$F).

GENERAL DESCRIPTION OF COMPLETED CABLE

7.6.2 Single-conductor Cable, Nonshielded. These cables shall consist of an insulated conductor covered with a jacket which meets the requirements of 7.6.19. They shall be in accordance with Table 7.6-2.

7.6.3 Two-conductor Cable. Two-conductor cable shall be one of two types: (1) flat twin or (2) two-conductor round.

7.6.3.1 *Two-conductor Flat Twin Cable*

▲ **7.6.3.1.1** Type W, Without Grounding Conductor. These cables shall consist of two conductors which are separately covered with insulation and, in addition, may be separately covered with a tape, braid or serving, and then laid parallel under a jacket which meets the requirements of 7.6.19. The conductors shall be separated by a web of the jacket or other material. If the protective covering on the individual conductors is omitted, a reinforcement shall be applied either over the parallel conductors or within the jacket. The cables shall be in accordance with Table 7.6-3.

▲ **7.6.3.1.2** Type G, With Grounding Conductor. These cables shall consist of two conductors which are separately covered with insulation and, in addition, may be separately covered with a tape, braid or serving. The two conductors shall then be laid parallel with a grounding conductor (see 7.6.12) between them. A jacket which meets the requirements of 7.6.19 shall be applied over the three conductors. If the protective covering on the individual conductors is omitted, a reinforcement shall be applied either over the parallel conductors and grounding conductor or within the jacket. The cables shall be in accordance with Table 7.6-3.

7.6.3.2 *Two-conductor Round Cable*

▲ **7.6.3.2.1** Type W, Without Grounding Conductors. These cables shall consist of two conductors which are separately covered with insulation. In addition, each conductor shall be separately covered with a colored tape or braid, except that on 600-volt cables this tape or braid may be omitted if a colored insulation is used (see 7.6.16). The conductors, together with any individual fillers, shall be cabled with a left-hand lay in accordance with Table 7.6-1 and covered with a jacket which meets the requirements of 7.6.19. The cables shall be in accordance with Table 7.6-5.

▲ **7.6.3.2.2** Type G, With Grounding Conductors. These cables shall consist of two conductors which are separately covered with insulation. In addition, each conductor shall be separately covered with a colored tape or braid, except that on 600-volt cables this tape or braid may be omitted if a colored insulation is used (see 7.6.16). The conductors, together with two grounding conductors (see 7.6.12) and any individual fillers, shall be cabled with a left-hand lay in accordance with Table 7.6-1 and covered with a jacket which meets the requirements of 7.6.19. The cables shall be in accordance with Table 7.6-5.

7.6.4 Three- and Four-conductor Cables. Three-conductor cables shall be one of three types: (1) Type W, round construction, without grounding conductors, (2) Type G, round construction, with grounding conductors, and (3) Type G, flat construction, with grounding conductors. Four-conductor cables shall be one of two types: (1) Type W, round construction, without grounding conductors and (2) Type G, round construction, with grounding conductors.

Copyright National Electrical Manufacturers Association
Provided by IHS under license with NEMA
No reproduction or networking permitted without license from IHS

Not for Resale

▲**7.6.4.1** *Type W, Round, Without Grounding Conductors.* These cables shall consist of three or four conductors which are separately covered with insulation. In addition, each conductor shall be separately covered with a colored tape or braid, except that on 600-volt cables this tape or braid may be omitted if a colored insulation is used (see 7.6.16). The conductors, together with any individual fillers, shall be cabled with a left-hand lay in accordance with Table 7.6-1 and covered with a jacket which meets the requirements of 7.6.19. Three-conductor cables shall be in accordance with Table 7.6-6, and four-conductor cables shall be in accordance with Table 7.6-7.

▲**7.6.4.2** *Type G, Round, With Grounding Conductors.* These cables shall consist of three or four conductors which are separately covered with insulation. In addition, each conductor shall be separately covered with a colored tape or braid, except that on 600-volt cables this tape or braid may be omitted if a colored insulation is used (see 7.6.16). The conductors, together with the grounding conductors (see 7.6.12) and any individual fillers, shall be cabled with a left-hand lay in accordance with Table 7.6-1 and covered with a jacket which meets the requirements of 7.6.19. Three-conductor cables shall be in accordance with Table 7.6-6, and four-conductor cables shall be in accordance with Table 7.6-7.

▲**7.6.4.3** *Type G, Flat Three-Conductor Cable with Grounding Conductors.* These cables shall consist of three conductors which are separately covered with insulation and, in addition, may be separately covered with a tape, braid or serving. The three conductors shall then be laid parallel with one of two flat grounding conductors (see 7.6.12) in a vertical position between each of them and under a jacket which meets the requirements of 7.6.19. If the protective covering on the individual conductors is omitted, a reinforcement shall be applied either over the parallel conductors and grounding conductors or within the jacket. The cables shall be in accordance with Table 7.6-4.

7.6.5 Shielded Cables—(Cables with Extra-heavy-duty Jackets Only). Shielded cables shall be of the following types: (1) Type SHD and SHD-GC three-conductor cables, or (2) Type SH single-conductor cables.

7.6.5.1 *Type SHD and SHD-GC Cables.* These cables shall consist of:

7.6.5.1.1 Type SHD 2001 to 15000 Volts. These cables shall consist of three power conductors which are separately covered with insulation, a colored tape, and a shield which meets the requirements of 7.6.17, and three grounding conductors (see Table 7.6-14), one in each interstice.

All power and grounding conductors and any necessary fillers shall be cabled together with a left-hand lay in accordance with Table 7.6.1 and covered with a jacket which meets the requirements of 7.6.19. These cables shall be in accordance with Table 7.6-8.

7.6.5.1.2 Type SHD-GC 2001 to 15000 Volts. These cables shall consist of three power conductors which are separately covered with insulation, a colored tape, and a shield which meets the requirements of 7.6.17, with two grounding conductors (see Table 7.6.14) and one ground check conductor in the third interstice (see 7.6.11).

All power conductors, grounding conductors, the ground check conductor for Type SHD–GC, and any individual fillers shall be cabled with a left-hand lay in accordance with Table 7.6-1 and covered with a jacket which meets the requirements of 7.6.19. The ground check conductor of Type SHD-GC cables shall be laid between the black and white conductors. These cables shall be in accordance with Table 7.6-8.

7.6.5.2 *Type SH Cables 2001 to 28000 Volts.* These cables shall consist of an insulated conductor cables shall consist of an insulated conductor covered with a tape, a shield which meets the requirements of 7.6.17 and with or without a tape over the shield. The assembly shall be covered with a jacket which meets the requirements of 7.6.19. The cables shall be in accordance with Table 7.6-9.

7.6.6 Five- and Six-conductor 600-volt Cables. Five-conductor cables shall be of two types: (1) Type W, without a grounding conductor and (2) Type G, with a grounding conductor. Six-conductor cables shall be Type W only.

7.6.6.1 *Type W, Without a Grounding Conductor.* These cables shall consist of five or six conductors which are separately covered with insulation. Each conductor shall be separately covered with a colored tape or braid which may be omitted if colored insulation is used (see 7.6.16). The conductors, together with any individual fillers, shall be cabled with a left-hand lay in accordance with Table 7.6-1 and covered with a jacket which meets the requirements of 7.6.19. The cables shall be in accordance with Table 7.6-10.

Copyright National Electrical Manufacturers Association
Provided by IHS under license with NEMA
No reproduction or networking permitted without license from IHS
Not for Resale

▲**7.6.6.2** *Type G, With Grounding Conductor (Five-conductor Cables Only).* These cables shall consist of five conductors which are separately covered with insulation. Each power conductor shall be separately covered with a colored tape or braid which may be omitted if colored insulation is used (see 7.6.16). The conductors, together with any individual fillers, shall be cabled with a left-hand lay in accordance with Table 7.6-1 around a single grounding conductor and covered with a jacket which meets the requirements of 7.6.19. These cables shall be in accordance with Table 7.6-10. These cables shall be used for the internal wiring of equipment only.

▲**7.6.7 Type PG, Two and Three Power Conductor With Single Grounding Conductor, 600 Volts.** These cables shall consist of two or three power conductors which are separately covered with insulation and a colored tape or braid or a colored insulation only (see 7.6.16). The conductors, together with a single grounding conductor (see 7.6.12) and any individual fillers, shall be cabled with a left-hand lay in accordance with Table 7.6-1 and covered with a jacket which meets the requirements of 7.6.19. These cables shall be in accordance with Table 7.6-11.

▲**7.6.8 Type PGC, Two and Three Power Conductor With Control Conductors and Single Grounding Conductor, 600 Volts.** These cables shall consist of two or three power conductors and two No. 10 AWG control conductors which are separately covered with insulation. In addition, each conductor shall be separately covered with a tape or braid, except that on power conductors this tape or braid may be omitted if a colored insulation is used (see 7.6.15.2 and 7.6.16). The power conductors, together with two control conductors and a single grounding conductor, shall be cabled with a left-hand lay in accordance with Table 7.6-1. Each control conductor shall be in a separate interstice between the power conductors. The assembly shall be covered with a jacket which meets the requirements of 7.6.19. The cables shall be in accordance with Table 7.6-12 (see 7.6.15.2 and 7.6.16).

7.6.9 Single-conductor Nonshielded Cables for Temporary Grounding of Overhead Lines. These cables shall consist of an insulated conductor covered with a jacket which meets the requirements of 7.6.19. These cables shall be in accordance with Table 7.6-13.

7.6.10 Power Conductors

7.6.10.1 Power conductors shall be made of annealed coated copper wires in accordance with Part 2.

7.6.10.2 The sizes, strandings, and nominal diameters of the conductors shall be in accordance with Table 7.6-14.

▲ **7.6.10.3** If used, conductor shielding shall be in accordance with 2.7.

7.6.11 Control and Ground Check Conductors. The control conductors for Type PCG cables and the ground check conductor for Type SHD-GC cables shall be size 10 AWG with a minimum of 104 strands of annealed uncoated copper wire over which is applied a suitable separator. In all other characteristics, the conductors shall meet the requirements of 7.6.10.

7.6.12 Grounding Conductors

7.6.12.1 The grounding conductors, where required, for all cables except flat twin Type G, flat three-conductor Type G, Type PG and Type PCG cables, shall be annealed copper of not less than the size and number of wires in Table 7.6-14 for the corresponding power conductor sizes. In all other characteristics, they shall meet the requirements of 7.6.10. For round Type G cables except five-conductor Type G, and for Type SHD cables except Type SHD-GC cables, the number of grounding conductors shall be the same as the number of power conductors. Five-conductor Type G cables shall have one grounding conductor, and Type SHD-GC cables shall have two grounding conductors.

▲ **7.6.12.2** The single grounding conductor for flat twin Type G cables shall be composed of either uncoated copper with a separator or of coated copper and shall have a minimum cross-sectional area of 50 percent of the power conductor but not less than the cross-sectional area for a No. 8 AWG conductor. The grounding conductor wires shall meet the requirements of 2.11.

7.6.12.3 The single grounding conductor for Type G (five-conductor), PG and PCG cables shall meet the requirements of 7.6.10 and shall be of the size and stranding given in Tables 7.6-10, 7.6-11 and 7.6-12.

Copyright National Electrical Manufacturers Association
Provided by IHS under license with NEMA rially revised.
No reproduction or networking permitted without license from IHS

Not for Resale

WC 3-80 6470247 0004774 1

7.6.12.4 The grounding conductors for Types G, PG, PCG and SHD cables shall be covered or uncovered.

7.6.12.5 The two grounding conductors for flat three-conductor a-c cables shall be flat, rectangular in shape, composed of either uncoated copper with a separator or of coated copper, and of the size given in Table 7.6-4. The grounding conductor wires shall meet the requirements of 2.1.1.

7.6.13 Insulation

7.6.13.1 *Grades.* The insulation shall be one of the grades listed in Table 3-1 suitable for operating at a conductor temperature of at least 75°C.

7.6.13.2 *Thickness of Insulation.* The average thickness of the insulation on the power conductors shall be not less than that given in Tables 7.6-2 to 7.6-13. In these tables, the highest rated circuit voltage at each step represents the maximum operating voltage recommended for that thickness of insulation. The average thickness of insulation on the control and ground check conductors shall be not less than 45 mils (1.14 mm). The minimum thickness shall be not less than 90 percent of the specified values.

7.6.14 Electrical Tests. See 7.6.22.2.

7.6.15 Tapes and Braids

7.6.15.1 *Tapes.* Tapes, if used over the individual conductors (see 7.6.2 to 7.6.8, inclusive), shall be compound-filled fabric tape which meets the requirements of 4.4.

7.6.15.2 *Braids.* Braids, if used over the individual conductors (see 7.6.3 to 7.6.8, inclusive), shall meet the requirements for Class A braids given in 4.5, except that an open weave braid may be used on 600-volt cables. A closely woven cotton or rayon braid shall be applied over each control conductor of Type PCG cables and the ground check conductor of Type SHD-GC cables.

▲7.6.16 Conductor Identification. Identification shall be obtained by colored tapes or other fibrous coverings or, when no fibrous coverings are used over the individual conductors, identification shall be obtained by colored insulations. The coloring of the insulation shall be obtained by colored compounds, colored coatings or colored stripes. The following colors shall be used in the sequence given.

7.6.16.1 *Power Conductors*

Two-conductor cables	
All Types	black, white
Three-conductor cables	
Types G (round and flat), PCG, PG and SHD*	black, white, red
Type W	black, white, green
Four-conductor cables	
Type G	black, white, red, orange
Type W	black, white, red, green
Five-conductor cables	
Type G	black, white, red, orange, blue
Type W	black, white, red, green, orange
Six-conductor cables	
Type W	black, white, red, green, orange, blue

7.6.16.2 *Control and Ground Check Conductors*

Control conductors, Type PCG	black, white
Ground check conductor, Type SHD-GC	yellow

*If a conducting nonmetallic tape over the insulated conductor is used, identification shall be indicated by stripes or printing in any constrasting color. ▲

Copyright National Electrical Manufacturers Association
Provided by IHS under license with NEMA
No reproduction or networking permitted without license from IHS

Not for Resale

7.6.17 Shielding

7.6.17.1 The shielding for Types SH and SHD cables shall consist of nonmagnetic wires. Where copper or copper alloy wires are used, they shall be coated in accordance with 2.1.1.

7.6.17.2 *Metal Braid Shields.* When shielding is applied in the form of a metal braid, the coverage shall be not less than 84 percent as determined by the following formula:

$$\text{Percent coverage} = 100\,(2F - F^2)$$

where—

$$F = \frac{NP\,d}{\sin a}$$

a = Angle of braid with axis of cable

$$\text{Tan } a = \frac{2\pi\,DP}{C}$$

d = Diameter of individual braid wires in inches
C = Number of carriers
D = Diameter under shield in inches
N = Number of wires per carrier
P = Picks per inch

7.6.17.3 *Metal Wire Shields.* Where the shielding is applied in the form of a serving or wrap, the coverage shall be not less than 60 percent as determined by the following formula:

$$\text{Percent coverage} = \frac{Nd}{W} \times 100$$

where—

N = Number of parallel wires
d = Diameter of individual wires in inches
$W = \pi\,D \cos a$
D = Diameter under shield in inches
a = Angle between serving wires and axis of cable

$$\text{Tan } a = \pi \frac{D}{C}$$

C = Pitch of serving in inches

7.6.18 Conductor Assembly. For round cables, the insulated conductors, together with grounding conductors and ground check conductors when required and any necessary fillers, shall be cables with a left-hand lay. For type SHD and SHD-GC cables the grounding conductors shall be in contact with the metallic shields. In such assemblies, suitable fillers shall be used to produce an essentially round cross-section in the completed cable. A binder tape and/or thread may be used over the assembly.

7.6.19 Jackets

● **7.6.19.1** *General.* The jacket shall be applied in one or two layers. If applied in two layers, the outer jacket shall constitute at least 50 percent of the total thickness of jacket. The single-layer jacket and the outer layer of a two-layer jacket shall meet the requirements of 7.6.19.1.1 through 7.6.19.1.8.

Single- or two-layer jackets shall be reinforced by two servings or a braid of a suitable natural or synthetic material. The diameter of the reinforcing material shall be not greater than 35 mils (0.89 mm). If two servings are used, they shall be applied in opposite directions of lay. The reinforcing shall be under the single-layer jacket and under or between the layers of the two-layer construction.

7.6.19.1.1 Extra-heavy-duty Neoprene Jacket

Physical requirements	
Tensile strength, minimum	
psi	2400
▲MPA	16.5
Tensile stress at 200 percent elongation, minimum	
psi	700
▲MPA	4.83
Elongation at rupture, minimum, percent	300
Set, maximum, percent	20
Tear, minimum	
pounds per inch	40
▲kN/m	7.01
Aging requirements	
After air oven test at 100°C ± 1°C for 168 hours—tensile strength and elongation at rupture, minimum, percentage of unaged value	50
After oil immersion test at 121°C ± 1°C for 18 hours—tensile strength and elongation, minimum, percentage of unaged value	60

7.6.19.1.2 Heavy-duty Neoprene Jacket

Physical requirements	
Tensile strength, minimum	
psi	1800
▲MPa	12.4
Tensile stress at 200 percent elongation, minimum	
psi	500
▲MPa	3.45
Elongation at rupture, minimum, percent	300
Set, maximum, percent	20
Aging requirements	
After air oven test at 100°C ± 1°C for 168 hours—tensile strength and elongation at rupture, minimum, percentage of unaged value	50
After oil immersion test at 121°C ± 1°C for 18 hours—tensile strength and elongation, minimum, percentage of unaged value	60

● Revised 9-15-1983.
▲ Editorially revised.

Copyright National Electrical Manufacturers Association
Provided by IHS under license with NEMA
No reproduction or networking permitted without license from IHS

Not for Resale

7.6.19.1.3 Extra-heavy-duty Nitrile-butadiene/polyvinyl-chloride Jacket*

Physical requirements	
Tensile strength, minimum	
psi	2400
▲MPa	16.5
Tensile stress at 200 percent elongation, minimum	
psi	700
▲MPa	4.83
Elongation at rupture, minimum, percent	300
Set, maximum, percent	30
Tear, minimum	
pounds per inch	40
▲kN/m	7.01
Aging requirements	
After air oven test at 100°C ± 1°C for 168 hours—tensile strength and elongation at rupture, minimum, percentage of unaged value	50
After oil immersion test at 121°C ± 1°C for 18 hours—tensile strength and elongation, minimum, percentage of unaged value	60

7.6.19.1.4 Heavy-duty Nitrile-butadiene polyvinyl-chloride Jacket*

Physical requirements	
Tensile strength, minimum	
psi	1800
▲MPa	12.4
Tensile stress at 200 percent elongation, minimum	
psi	500
▲MPa	3.45
Elongation at rupture, minimum, percent	300
Set, maximum, percent	30
Aging requirements	
After air oven test at 100°C ± 1°C for 168 hours—tensile strength and elongation at rupture, minimum, percentage of unaged value	50
After oil immersion test at 121°C ± 1°C for 18 hours—tensile strength and elongation, minimum, percentage of unaged value	60

7.6.19.1.5 Chlorosulfonated Polyethylene, Heavy Duty

Physical requirements	
Tensile strength, minimum	
psi	1800
▲MPa	12.4
Tensile stress at 200 percent elongation, minimum	
psi	500
▲MPa	3.45
Elongation at rupture, minimum, percent	300
Set, maximum, percent	30
Aging requirements	
After air oven test at 100°C ± 1°C for 168 hours	
Tensile strength, minimum, percentage of unaged value	85
Elongation at rupture, minimum, percentage of unaged value	65
After oil immersion test at 121°C ± 1°C for 18 hours—tensile strength and elongation at rupture, minimum, percentage of unaged value	60

*Suitable for a minimum temperature of −10°C (+14°F).

▲ Editorially revised.

7.6.19.1.6 Extra-heavy-duty Chlorosulfonated Polyethylene

Physical requirements	
Tensile strength, minimum	
psi	2400
▲MPa	16.5
Tensile stress at 200 percent elongation, minimum	
psi	700
▲MPa	4.83
Elongation at rupture, minimum, percent	300
Set, maximum, percent	30
Tear, minimum	
pounds per inch	40
▲KN/m	7.01
Aging requirements	
After air oven test at 100°C ± 1°C for 168 hours—tensile strength, minimum, percentage of unaged value	70
Elongation at rupture, minimum percentage of unaged value	60
After oil immersion test at 121°C ± 1°C for 18 hours—tensile strength and elongation, minimum, percentage of unaged value	60

● **7.6.19.1.7** Chlorinated Polyethylene, Heavy Duty, Crosslinked

Physical requirements	
Tensile strength, minimum	
psi	1800
▲MPa	12.4
Tensile stress at 200 percent elongation, minimum	
psi	500
▲MPa	3.45
Elongation at rupture, minimum, percent	300
Set, maximum, percent	30
Aging requirements	
After air oven test at 100°C ± 1°C for 168 hours	
Tensile strength, minimum, percentage of unaged value	85
Elongation at rupture, minimum, percentage of unaged value	55
After oil immersion test at 121°C ± 1°C for 18 hours—tensile strength and elongation at rupture, minimum, percentage of unaged value	60

● **7.6.19.1.8** Extra-heavy-duty Chlorinated Polyethylene, Crosslinked

Physical requirements	
Tensile strength, minimum	
psi	2400
MPa	16.5
Tensile stress at 200 percent elongation, minimum	
psi	700
MPa	4.83
Elongation at rupture, minimum, percent	300
Set, maximum, percent	30
Tear, minimum	
pounds per inch	40
kN/m	7.01
Aging requirements	
After air oven test at 100°C ± 1°C for 168 hours—tensile strength, minimum, percentage of unaged value	70
Elongation at rupture, minimum percentage of unaged value	60
After oil immersion test at 121°C ± 1°C for 18 hours—tensile strength and elongation, minimum, percentage of unaged value	60

Copyright National Electrical Manufacturers Association
Provided by IHS under license with NEMA 12-15-1983.
No reproduction or networking permitted without license from IHS
Not for Resale

7.6.19.2 *Thickness of Jacket.* The average thickness of the jacket shall be not less than that given in Tables 7.6-2, 7.6-3, 7.6-5, 7.6-6, 7.6-7, 7.6-8, 7.6-9 and 7.6-13. For portable cables not covered by these tables, see Appendix O for jacket thickness. The minimum thickness shall be not less than 80 percent of the values given in the tables and Appendix O. The reinforcing specified in 7.6.19.1 shall be included in the measurement of the jacket thickness. ▲

7.6.20 Completed Cable

7.6.20.1 *Outside Diameters.* Nominal outside diameters of the completed cables shall be in accordance with Tables 7.6-2 to 7.6-13, inclusive.

7.6.20.2 *Diameter Tolerances.* The tolerance for outside diameters shall be plus 8 percent and minus 5 percent, except for 600-volt cables. For 600-volt flat twin cables, the tolerance shall be ±0.04 inch for the major and ±0.03 inch for the minor diameter. For 600-volt flat three-conductor cables the tolerance shall be ±0.06 inch for the major and ±0.05 inch for the minor diameter. For all other 600-volt cables, the tolerances shall be as follows: ▲

Size, AWG or kcmil ▲	Outside Diameter Tolerances, Plus and Minus, Inches
8–1	0.03
1/0–2/0	0.04
3/0–4/0	0.05
250–1000	0.06

7.6.21 Marking. The cable shall be identified throughout its length to indicate the manufacturer.

7.6.22 Tests. The cable shall be tested in accordance with Part 6 and shall meet the requirements specified in 7.6.

The insulated power conductors shall meet the test voltage requirements given in Tables 7.6-2 through 7.6-13. The partial-discharge-extinction level test is not required.

The insulated ground check conductor shall withstand for 15 seconds an alternating-current voltage of 3000 volts. The insulation resistance test is not required.

Table 7.6-1

Maximum Length of Lay

Number of Power Conductors	Factors for Maximum Length of Lay*
2	20 x d
3	21 x d
4	23 x d
5	27 x d
6	30 x d

*d = diameter of individual power conductor.

Copyright National Electrical Manufacturers Association
Provided by IHS under license with NEMA
No reproduction or networking permitted without license from IHS

Not for Resale

Table 7.6-2
Single-conductor Portable Power Cables, Nonshielded

Conductor Size*, AWG or MCM†	Insulation Thickness		Jacket Thickness		Outside Diameter		Test Voltage, kV: Cables with Other than Ozone-resisting Insulation		Test Voltage, kV: Cables with Ozone-resisting Insulation	
	mils	mm	mils	mm	inches	mm	a-c	d-c	a-c	d-c
0 TO 600 VOLTS										
8	60	1.52	...	...	0.44	11.2	3.5	10.5	6	18
6	60	1.52	...	...	0.51	13.0	3.5	10.5	6	18
4	60	1.52	...	...	0.57	14.5	3.5	10.5	6	18
3	60	1.52	...	...	0.63	16.0	3.5	10.5	6	18
2	60	1.52	...	...	0.66	16.8	3.5	10.5	6	18
1	80	2.03	...	...	0.74	18.8	4	12	7.5	22.5
1/0	80	2.03	...	...	0.77	19.6	4	12	7.5	22.5
2/0	80	2.03	...	...	0.82	20.8	4	12	7.5	22.5
3/0	80	2.03	...	...	0.87	22.1	4	12	7.5	22.5
4/0	80	2.03	...	...	0.93	23.6	4	12	7.5	22.5
250	95	2.41	95	2.41	1.03	25.2	5	15	8.5	25.5
300	95	2.41	95	2.41	1.09	27.7	5	15	8.5	25.5
350	95	2.41	95	2.41	1.15	29.2	5	15	8.5	25.5
400	95	2.41	95	2.41	1.20	30.5	5	15	8.5	25.5
450	95	2.41	95	2.41	1.26	32.0	5	15	8.5	25.5
500	95	2.41	95	2.41	1.31	33.3	5	15	8.5	25.5
550	110	2.79	110	2.79	1.42	36.1	6	18	10	30
600	110	2.79	110	2.79	1.46	37.1	6	18	10	30
650	110	2.79	110	2.79	1.50	38.1	6	18	10	30
700	110	2.79	110	2.79	1.54	39.1	6	18	10	30
750	110	2.79	110	2.79	1.58	40.1	6	18	10	30
800	110	2.79	110	2.79	1.62	41.1	6	18	10	30
900	110	2.79	110	2.79	1.69	43.0	6	18	10	30
1000	110	2.79	110	2.79	1.76	44.7	6	18	10	30
601 TO 1000 VOLTS										
8	60	1.52	60	1.52	0.44	11.2	5	15	6	18
6	80	2.03	95	2.41	0.56	14.2	6	18	7.5	22.5
4	80	2.03	95	2.41	0.61	15.5	6	18	7.5	22.5
3	80	2.03	95	2.41	0.65	16.5	6	18	7.5	22.5
2	80	2.03	95	2.41	0.68	17.3	6	18	7.5	22.5
1	95	2.41	110	2.79	0.79	20.1	7.5	22.5	8.5	25.5
1/0	95	2.41	110	2.79	0.83	21.1	7.5	22.5	8.5	25.5
2/0	95	2.41	110	2.79	0.88	22.4	7.5	22.5	8.5	25.5
3/0	95	2.41	110	2.79	0.95	24.1	7.5	22.5	8.5	25.5
4/0	95	2.41	110	2.79	1.02	25.9	7.5	22.5	8.5	25.5
250	110	2.79	110	2.79	1.09	27.7	9	27	10	30
300	110	2.79	110	2.79	1.15	29.2	9	27	10	30
350	110	2.79	110	2.79	1.21	30.7	9	27	10	30
400	110	2.79	110	2.79	1.26	32.0	9	27	10	30
450	110	2.79	110	2.79	1.31	33.3	9	27	10	30
500	110	2.79	110	2.79	1.36	34.5	9	27	10	30
550	125	3.18	125	3.18	1.48	37.6	10	30	11.5	34.5
600	125	3.18	125	3.18	1.52	38.6	10	30	11.5	34.5
650	125	3.18	125	3.18	1.56	39.6	10	30	11.5	34.5
700	125	3.18	125	3.18	1.61	40.9	10	30	11.5	34.5
750	125	3.18	125	3.18	1.65	41.9	10	30	11.5	34.5
800	125	3.18	125	3.18	1.68	42.7	10	30	11.5	34.5
900	125	3.18	125	3.18	1.75	44.4	10	30	11.5	34.5
1000	125	3.18	125	3.18	1.82	46.2	10	30	11.5	34.5

* When greater tensile strength is required, steel wires not exceeding 15 percent of the cross-sectional area of the conductor may be substituted for copper without changing the total cross-sectional area of the conductor.
† See Table 7.6-14.

Copyright National Electrical Manufacturers Association
Provided by IHS under license with NEMA
No reproduction or networking permitted without license from IHS
Not for Resale

Table 7.6-3
Two-conductor Flat Twin Portable Power Cables, Types W and G

Conductor Size, AWG†	Insulation Thickness		Nominal Outside Diameter				Test Voltage, kV			
			Minor		Major		Cables with Other than Ozone-resisting Insulation		Cables with Ozone-resisting Insulation	
	mils	mm	inches	mm	inches	mm	a-c	d-c	a-c	d-c
0 TO 600 VOLTS, WITHOUT GROUNDING CONDUCTOR, TYPE W										
8	60	1.52	0.51	13.0	0.84	21.3	3.5	10.5	6	18
6	60	1.52	0.56	14.2	0.93	23.6	3.5	10.5	6	18
4	60	1.52	0.61	15.5	1.05	26.7	3.5	10.5	6	18
3	60	1.52	0.68	17.3	1.14	29.0	3.5	10.5	6	18
2	60	1.52	0.73	18.5	1.24	31.5	3.5	10.5	6	18
1	80	2.03	0.81	20.6	1.40	35.6	4	12	7.5	22.5
1/0	80	2.03	0.93	23.6	1.51	38.4	4	12	7.5	22.5
2/0	80	2.03	0.99	25.1	1.63	41.4	4	12	7.5	22.5
3/0	80	2.03	1.03	26.2	1.77	45.0	4	12	7.5	22.5
4/0	80	2.03	1.10	27.9	1.89	48.0	4	12	7.5	22.5
0 TO 600 VOLTS, WITH GROUNDING CONDUCTOR, TYPE G										
6	60	1.52	0.56	14.2	1.02	25.9	3.5	10.5	6	18
4	60	1.52	0.61	15.5	1.15	29.2	3.5	10.5	6	18
3	60	1.52	0.68	17.3	1.26	32.0	3.5	10.5	6	18
2	60	1.52	0.73	18.5	1.35	34.3	3.5	10.5	6	18
1	80	2.03	0.81	20.6	1.55	39.4	4	12	7.5	22.5
1/0	80	2.03	0.93	23.6	1.67	42.4	4	12	7.5	22.5
2/0	80	2.03	0.99	25.1	1.85	47.0	4	12	7.5	22.5
3/0	80	2.03	1.03	26.2	2.00	50.8	4	12	7.5	22.5
4/0	80	2.03	1.10	27.9	2.10*	53.3*	4	12	7.5	22.5

601 TO 1000 VOLTS, WITHOUT GROUNDING CONDUCTOR, TYPE W

Conductor Size, AWG†	Insulation Thickness		Jacket Thickness		Nominal Outside Diameter				Test Voltage, kV			
					Minor		Major		Cables with Other than Ozone-resisting Insulation		Cables with Ozone-resisting Insulation	
	mils	mm	mils	mm	inches	mm	inches	mm	a-c	d-c	a-c	d-c
8	60	1.52	125	3.18	0.60	15.2	0.92	23.4	5	15	6	18
6	80	2.03	125	3.18	0.68	17.3	1.08	27.4	6	18	7.5	22.5
4	80	2.03	140	3.56	0.77	19.6	1.22	31.0	6	18	7.5	22.5
3	80	2.03	140	3.56	0.80	20.3	1.29	32.8	6	18	7.5	22.5
2	80	2.03	140	3.56	0.84	21.3	1.36	34.5	6	18	7.5	22.5
1	95	2.41	155	3.94	0.94	23.9	1.54	39.1	7.5	22.5	8.5	25.5
1/0	95	2.41	155	3.94	0.99	25.1	1.64	41.7	7.5	22.5	8.5	25.5
2/0	95	2.41	155	3.94	1.05	26.7	1.75	44.4	7.5	22.5	8.5	25.5
3/0	95	2.41	170	4.32	1.14	29.0	1.91	48.5	7.5	22.5	8.5	25.5
4/0	95	2.41	170	4.32	1.21	30.7	2.04*	51.8*	7.5	22.5	8.5	25.5

* These diameters apply to cables with extra-heavy-duty jackets only (see 7.6.1).
† See Table 7.6-14.

Copyright National Electrical Manufacturers Association
Provided by IHS under license with NEMA
No reproduction or networking permitted without license from IHS

Not for Resale

Copyright National Electrical Manufacturers Association
Provided by IHS under license with NEMA
No reproduction or networking permitted without license from IHS
Not for Resale

6470247 0004780 7

Table 7.6-4
Flat Three-conductor a-c Portable Power Cables, Type G, 0–600 Volts

Power Conductor Size, AWG	Grounding Conductor Size, AWG	Power Conductor Insulation Thickness		Nominal Outside Diameter				Test Voltage, kV			
				Minor		Major		Cables with Other than Ozone-resisting Insulation		Cables with Ozone-resisting Insulation	
		mils	mm	inches	mm	inches	mm	a-c	d-c	a-c	d-c
6	8	60	1.52	0.67	17.0	1.65	41.9	3.5	10.5	6	18
4	8	60	1.52	0.75	19.0	1.85	47.0	3.5	10.5	6	18
3	7	60	1.52	0.77	19.6	1.99	50.5	3.5	10.5	6	18
2	6	60	1.52	0.81	20.6	2.10	53.3	3.5	10.5	6	18
1	5	80	2.03	0.97	24.6	2.43	61.7	4	12	7.5	22.5

Table 7.6-5
Two-conductor Round Portable Power Cables, Types W and G
Without Grounding Conductors, Type W, and With Grounding Conductors, Type G

Conductor Size, AWG or MCM†	Insulation Thickness		Jacket Thickness		Outside Diameter		Test Voltage, kV: Cables with Other than Ozone-resisting Insulation		Test Voltage, kV: Cables with Ozone-resisting Insulation	
	mils	mm	mils	mm	inches	mm	a-c	d-c	a-c	d-c
0 TO 600 VOLTS										
8	60	1.52	...	...	0.81	20.5	3.5	10.5	6	18
6	60	1.52	...	...	0.93	23.6	3.5	10.5	6	18
4	60	1.52	...	...	1.08	27.4	3.5	10.5	6	18
3	60	1.52	...	...	1.17	29.7	3.5	10.5	6	18
2	60	1.52	...	...	1.27	32.3	3.5	10.5	6	18
1	80	2.03	...	...	1.44	36.6	4	12	7.5	22.5
1/0	80	2.03	...	...	1.52	38.6	4	12	7.5	22.5
2/0	80	2.03	...	...	1.65	41.9	4	12	7.5	22.5
3/0	80	2.03	...	...	1.77	45.0	4	12	7.5	22.5
4/0	80	2.03	...	...	1.92	48.8	4	12	7.5	22.5
250	95	2.41	205	5.21	2.16*	54.9*	5	15	8.5	25.5
300	95	2.41	220	5.59	2.32*	58.9*	5	15	8.5	25.5
350	95	2.41	220	5.59	2.43*	61.7*	5	15	8.5	25.5
400	95	2.41	235	5.97	2.57*	65.3*	5	15	8.5	25.5
450	95	2.41	235	5.97	2.67*	67.8*	5	15	8.5	25.5
500	95	2.41	235	5.97	2.76*	70.1*	5	15	8.5	25.5
601 TO 1000 VOLTS										
8	60	1.52	140	3.56	0.92	23.4	5	15	6	18
6	80	2.03	140	3.56	1.08	27.4	6	18	7.5	22.5
4	80	2.03	155	3.94	1.23	31.2	6	18	7.5	22.5
3	80	2.03	155	3.94	1.30	33.0	6	18	7.5	22.5
2	80	2.03	155	3.94	1.37	34.8	6	18	7.5	22.5
1	95	2.41	170	4.32	1.55	39.4	7.5	22.5	8.5	25.5
1/0	95	2.41	170	4.32	1.64	41.7	7.5	22.5	8.5	25.5
2/0	95	2.41	190	4.83	1.78	45.2	7.5	22.5	8.5	25.5
3/0	95	2.41	190	4.83	1.91	48.5	7.5	22.5	8.5	25.5
4/0	95	2.41	205	5.21	2.07*	52.6*	7.5	22.5	8.5	25.5
250	110	2.79	205	5.21	2.22*	56.4*	9	27	10	30
300	110	2.79	220	5.59	2.38*	60.5*	9	27	10	30
350	110	2.79	220	5.59	2.49*	63.2*	9	27	10	30
400	110	2.79	235	5.97	2.63*	66.8*	9	27	10	30
450	110	2.79	235	5.97	2.73*	69.3*	9	27	10	30
500	110	2.79	250	6.35	2.85*	72.4*	9	27	10	30

* These diameters apply to cables with extra-heavy-duty jackets only (see 7.6.1).
† See Table 7.6-14.

Copyright National Electrical Manufacturers Association
Provided by IHS under license with NEMA
No reproduction or networking permitted without license from IHS
Not for Resale

Table 7.6-6
Three-conductor Portable Power Cables, Types W and G†
Without Grounding Conductors, Type W, and With Grounding Conductors, Type G

Conductor Size, AWG or MCM‡	Insulation Thickness		Jacket Thickness		Outside Diameter		Test Voltage, kV: Cables with Other than Ozone-resisting Insulation		Test Voltage, kV: Cables with Ozone-resisting Insulation	
	mils	mm	mils	mm	inches	mm	a-c	d-c	a-c	d-c
0 TO 600 VOLTS										
8	60	1.52	...	...	0.91	23.1	3.5	10.5	6	18
6	60	1.52	...	...	1.01	25.7	3.5	10.5	6	18
4	60	1.52	...	...	1.17	29.7	3.5	10.5	6	18
3	60	1.52	...	...	1.24	31.5	3.5	10.5	6	18
2	60	1.52	...	...	1.34	34.3	3.5	10.5	6	18
1	80	2.03	...	...	1.51	38.4	4	12	7.5	22.5
1/0	80	2.03	...	...	1.65	42.0	4	12	7.5	22.5
2/0	80	2.03	...	...	1.75	44.0	4	12	7.5	22.5
3/0	80	2.03	...	...	1.89	48.0	4	12	7.5	22.5
4/0	80	2.03	...	...	2.04*	51.8*	4	12	7.5	22.5
250	95	2.41	...	...	2.39*	60.7*	5	15	8.5	25.5
300	95	2.41	...	...	2.56*	65.0*	5	15	8.5	25.5
350	95	2.41	...	...	2.68*	68.1*	5	15	8.5	25.5
400	95	2.41	...	...	2.82*	71.6*	5	15	8.5	25.5
450	95	2.41	...	...	2.94*	74.7*	5	15	8.5	25.5
500	95	2.41	...	...	3.03*	77.7*	5	15	8.5	25.5
601 TO 1000 VOLTS										
8	60	1.52	140	3.56	0.97	24.6	5	15	6	18
6	80	2.03	140	3.56	1.15	29.2	6	18	7.5	22.5
4	80	2.03	155	3.94	1.32	33.5	6	18	7.5	22.5
3	80	2.03	155	3.94	1.38	35.1	6	18	7.5	22.5
2	80	2.03	170	4.32	1.49	37.8	6	18	7.5	22.5
1	95	2.41	170	4.32	1.64	41.7	7.5	22.5	8.5	25.5
1/0	95	2.41	190	4.83	1.78	45.2	7.5	22.5	8.5	25.5
2/0	95	2.41	190	4.83	1.89	48.0	7.5	22.5	8.5	25.5
3/0	95	2.41	205	5.21	2.06*	52.3*	7.5	22.5	8.5	25.5
4/0	95	2.41	205	5.21	2.20*	55.9*	7.5	22.5	8.5	25.5
250	110	2.79	220	5.59	2.39*	60.7*	9	27	10	30
300	110	2.79	235	5.97	2.56*	65.0*	9	27	10	30
350	110	2.79	235	5.97	2.68*	68.1*	9	27	10	30
400	110	2.79	250	6.35	2.82*	71.6*	9	27	10	30
450	110	2.79	250	6.35	2.94*	74.7*	9	27	10	30
500	110	2.79	250	6.35	3.03*	77.0*	9	27	10	30
1001 TO 2000 VOLTS										
8	80	2.03	140	3.56	1.04	26.4	6	18	7.5	22.5
6	95	2.41	155	3.94	1.25	31.8	7.5	22.5	8.5	25.5
4	95	2.41	170	4.32	1.40	35.6	7.5	22.5	8.5	25.5
3	95	2.41	170	4.32	1.48	37.6	7.5	22.5	8.5	25.5
2	95	2.41	170	4.32	1.55	39.4	7.5	22.5	8.5	25.5
1	110	2.79	190	4.83	1.74	44.2	9	27	10	30
1/0	110	2.79	190	4.83	1.84	46.7	9	27	10	30
2/0	110	2.79	205	5.21	1.99	50.5	9	27	10	30
3/0	110	2.79	205	5.21	2.12*	53.8*	9	27	10	30
4/0	110	2.79	220	5.59	2.30*	58.4*	9	27	10	30
250	125	3.18	220	5.59	2.46*	62.5*	10	30	11.5	34.5
300	125	3.18	235	5.97	2.63*	66.8*	10	30	11.5	34.5
350	125	3.18	235	5.97	2.75*	69.8*	10	30	11.5	34.5
400	125	3.18	250	6.35	2.89*	73.4*	10	30	11.5	34.5
450	125	3.18	250	6.35	3.01*	76.5*	10	30	11.5	34.5
500	125	3.18	265	6.73	3.13*	79.5*	10	30	11.5	34.5

* These diameters apply to cables with extra-heavy-duty jackets only (see 7.6.1).
† See Appendix H.
‡ See Table 7.6-14.

(Continued)

Copyright National Electrical Manufacturers Association
Provided by IHS under license with NEMA
No reproduction or networking permitted without license from IHS
Not for Resale

Table 7.6-6 (Continued)
Three-conductor Portable Power Cables, Types W and G†
Without Grounding Conductors, Type W, and With Grounding Conductors, Type G

Conductor Size, AWG or MCM‡	Insulation Thickness		Jacket Thickness		Outside Diameter		Test Voltage, kV: Cables with Other than Ozone-resisting Insulation		Test Voltage, kV: Cables with Ozone-resisting Insulation	
	mils	mm	mils	mm	inches	mm	a-c	d-c	a-c	d-c
2001 TO 3000 VOLTS										
8	110	2.79	155	3.94	1.21	30.7	...	...	10	30
6	125	3.18	155	3.94	1.39	35.3	...	...	11.5	34.5
4	125	3.18	170	4.32	1.54	39.1	...	...	11.5	34.5
3	125	3.18	170	4.32	1.61	40.9	...	...	11.5	34.5
2	125	3.18	190	4.83	1.72	43.7	...	...	11.5	34.5
1	125	3.18	190	4.83	1.81	46.0	...	...	11.5	34.5
1/0	125	3.18	190	4.83	1.91	48.5	...	...	11.5	34.5
2/0	125	3.18	205	5.21	2.05*	52.1*	...	...	11.5	34.5
3/0	125	3.18	205	5.21	2.18*	55.4*	...	...	11.5	34.5
4/0	125	3.18	220	5.59	2.37*	60.2*	...	...	11.5	34.5
250	140	3.56	235	5.97	2.56*	65.0*	...	...	13	35
300	140	3.56	235	5.97	2.69*	68.3*	...	...	13	35
350	140	3.56	250	6.35	2.85*	72.4*	...	...	13	35
400	140	3.56	250	6.35	2.96*	75.2*	...	...	13	35
450	140	3.56	265	6.73	3.10*	78.7*	...	...	13	35
500	140	3.56	265	6.73	3.20*	81.3*	...	...	13	35
3001 TO 5000 VOLTS										
8	...	...	...	...	...	...	...	...	...	...
6	155	3.94	170	4.32	1.55	39.4	...	...	13	35
4	155	3.94	170	4.32	1.67	42.4	...	...	13	35
3	155	3.94	190	4.83	1.78	45.2	...	...	13	35
2	155	3.94	190	4.83	1.86	47.2	...	...	13	35
1	155	3.94	205	5.21	1.97	50.0	...	...	13	35
1/0	155	3.94	205	5.21	2.08*	52.8*	...	...	13	35
2/0	155	3.94	205	5.21	2.19*	55.6*	...	...	13	35
3/0	155	3.94	220	5.59	2.36*	59.9*	...	...	13	35
4/0	155	3.94	220	5.59	2.50*	63.5*	...	...	13	35
250	170	4.32	235	5.97	2.69*	68.3*	...	...	13	35
300	170	4.32	250	6.35	2.86*	72.6*	...	...	13	35
350	170	4.32	250	6.35	2.98*	75.6*	...	...	13	35
400	170	4.32	265	6.73	3.13*	79.5*	...	...	13	35
450	170	4.32	265	6.73	3.24*	82.3*	...	...	13	35
500	170	4.32	280	7.11	3.37*	85.6*	...	...	13	35

* These diameters apply to cables with extra-heavy-duty jackets only (see 7.6.1).
† See Appendix H.
‡ See Table 7.6-14.

Copyright National Electrical Manufacturers Association
Provided by IHS under license with NEMA
No reproduction or networking permitted without license from IHS

Not for Resale

Table 7.6-7
Four-conductor Portable Power Cables, Types W and G†
Without Grounding Conductors, Type W, and With Grounding Conductors, Type G

Conductor Size, AWG or MCM‡	Insulation Thickness		Jacket Thickness		Outside Diameter		Test Voltage, kV: Cables with Other than Ozone-resisting Insulation		Test Voltage, kV: Cables with Ozone-resisting Insulation	
	mils	mm	mils	mm	inches	mm	a-c	d-c	a-c	d-c
0 TO 600 VOLTS										
8	60	1.52	...	...	0.99	25.1	3.5	10.5	6	18
6	60	1.52	...	...	1.10	27.9	3.5	10.5	6	18
4	60	1.52	...	...	1.27	32.3	3.5	10.5	6	18
3	60	1.52	...	...	1.34	34.0	3.5	10.5	6	18
2	60	1.52	...	...	1.48	37.6	3.5	10.5	6	18
1	80	2.03	...	...	1.68	42.7	4	12	7.5	22.5
1/0	80	2.03	...	...	1.79	45.5	4	12	7.5	22.5
2/0	80	2.03	...	...	1.93	49.0	4	12	7.5	22.5
3/0	80	2.03	...	...	2.07*	52.6*	4	12	7.5	22.5
4/0	80	2.03	...	...	2.26*	57.4*	4	12	7.5	22.5
250	95	2.41	...	...	2.66*	67.6*	5	15	8.5	25.5
300	95	2.41	...	...	2.84*	72.1*	5	15	8.5	25.5
350	95	2.41	...	...	2.98*	75.7*	5	15	8.5	25.5
400	95	2.41	...	...	3.14*	79.8*	5	15	8.5	25.5
450	95	2.41	...	...	3.26*	82.8*	5	15	8.5	25.5
500	95	2.41	...	...	3.40*	86.4*	5	15	8.5	25.5
601 TO 1000 VOLTS										
8	60	1.52	140	3.56	1.06	26.9	5	15	6	18
6	80	2.03	155	3.94	1.29	32.8	6	18	7.5	22.5
4	80	2.03	155	3.94	1.42	36.1	6	18	7.5	22.5
3	80	2.03	170	4.32	1.53	38.9	6	18	7.5	22.5
2	80	2.03	170	4.32	1.62	41.1	6	18	7.5	22.5
1	95	2.41	190	4.83	1.83	46.4	7.5	22.5	8.5	25.5
1/0	95	2.41	205	5.21	2.01*	51.1*	7.5	22.5	8.5	25.5
2/0	95	2.41	205	5.21	2.10*	53.3*	7.5	22.5	8.5	25.5
3/0	95	2.41	220	5.59	2.29*	58.2*	7.5	22.5	8.5	25.5
4/0	95	2.41	220	5.59	2.45*	62.2*	7.5	22.5	8.5	25.5
250	110	2.79	235	5.97	2.66*	67.6*	9	27	10	30
300	110	2.79	250	6.35	2.84*	72.1*	9	27	10	30
350	110	2.79	250	6.35	2.98*	75.7*	9	27	10	30
400	110	2.79	265	6.73	3.14*	79.8*	9	27	10	30
450	110	2.79	265	6.73	3.26*	82.8*	9	27	10	30
500	110	2.79	280	7.11	3.40*	86.4*	9	27	10	30
1001 TO 2000 VOLTS										
8	80	2.03	140	3.56	1.13	28.7	6	18	7.5	22.5
6	95	2.41	155	3.94	1.36	34.5	7.5	22.5	8.5	25.5
4	95	2.41	170	4.32	1.53	38.9	7.5	22.5	8.5	25.5
3	95	2.41	170	4.32	1.61	40.9	7.5	22.5	8.5	25.5
2	95	2.41	190	4.83	1.73	43.9	7.5	22.5	8.5	25.5
1	110	2.79	190	4.83	1.90	48.3	9	27	10	30
1/0	110	2.79	205	5.21	2.05*	52.1*	9	27	10	30
2/0	110	2.79	205	5.21	2.17*	55.1*	9	27	10	30
3/0	110	2.79	220	5.59	2.36*	59.9*	9	27	10	30
4/0	110	2.79	220	5.59	2.52*	64.0*	9	27	10	30
250	125	3.18	235	5.97	2.73*	69.3*	10	30	11.5	34.5
300	125	3.18	250	6.35	2.92*	74.2*	10	30	11.5	34.5
350	125	3.18	265	6.73	3.08*	78.2*	10	30	11.5	34.5
400	125	3.18	265	6.73	3.21*	81.5*	10	30	11.5	34.5
450	125	3.18	280	7.11	3.37*	85.6*	10	30	11.5	34.5
500	125	3.18	280	7.11	3.48*	88.4*	10	30	11.5	34.5

* These diameters apply to cables with extra-heavy-duty jackets only (see 7.6.1).
† See Appendix H.
‡ See Table 7.6-14.

(Continued)

Copyright National Electrical Manufacturers Association
Provided by IHS under license with NEMA
No reproduction or networking permitted without license from IHS

Not for Resale

Table 7.6-7 (Continued)
Four-conductor Portable Power Cables, Types W and G†
Without Grounding Conductors, Type W, and With Grounding Conductors, Type G

Conductor Size, AWG or MCM‡	Insulation Thickness		Jacket Thickness		Outside Diameter		Test Voltage, kV: Cables with Other than Ozone-resisting Insulation		Test Voltage, kV: Cables with Ozone-resisting Insulation	
	mils	mm	mils	mm	inches	mm	a-c	d-c	a-c	d-c
2001 TO 3000 VOLTS										
8	110	2.79	155	3.94	1.31	33.3	...	...	10	30
6	125	3.18	170	4.32	1.55	39.4	...	...	11.5	34.5
4	125	3.18	170	4.32	1.68	42.7	...	...	11.5	34.5
3	125	3.18	190	4.83	1.79	45.5	...	...	11.5	34.5
2	125	3.18	190	4.83	1.88	67.8	...	...	11.5	34.5
1	125	3.18	205	5.21	2.01*	51.1*	...	...	11.5	34.5
1/0	125	3.18	205	5.21	2.12*	53.8*	...	...	11.5	34.5
2/0	125	3.18	220	5.59	2.28*	57.9*	...	...	11.5	34.5
3/0	125	3.18	220	5.59	2.44*	62.0*	...	...	11.5	34.5
4/0	125	3.18	235	5.97	2.63*	66.8*	...	...	11.5	34.5
250	140	3.56	250	6.35	2.84*	72.1*	...	...	13	35
300	140	3.56	250	6.35	2.99*	75.9*	...	...	13	35
350	140	3.56	265	6.73	3.16*	80.3*	...	...	13	35
400	140	3.56	265	6.73	3.28*	83.3*	...	...	13	35
450	140	3.56	280	7.11	3.44*	87.4*	...	...	13	35
500	140	3.56	...	...	...	...	...	...	13	35
3001 TO 5000 VOLTS										
8	...	...	...	...	...	...	...	...	...	...
6	155	3.94	190	4.83	1.73	43.9	...	...	13	35
4	155	3.94	190	4.83	1.86	47.2	...	...	13	35
3	155	3.94	190	4.83	1.94	49.3	...	...	13	35
2	155	3.94	205	5.21	2.06*	52.3*	...	...	13	35
1	155	3.94	205	5.21	2.16*	54.9*	...	...	13	35
1/0	155	3.94	220	5.59	2.31*	58.7*	...	...	13	35
2/0	155	3.94	220	5.59	2.43*	61.7*	...	...	13	35
3/0	155	3.94	235	5.97	2.62*	66.5*	...	...	13	35
4/0	155	3.94	235	5.97	2.78*	70.6*	...	...	13	35
250	170	4.32	250	6.35	2.99*	75.9*	...	...	13	35
300	170	4.32	265	6.73	3.17*	80.5*	...	...	13	35
350	170	4.32	265	6.73	3.31*	84.1*	...	...	13	35
400	170	4.32	280	7.11	3.47*	88.1*	...	...	13	35
450	...	...	...	...	...	...	...	...	...	...
500	...	...	...	...	...	...	...	...	...	...

* These diameters apply to cables with extra-heavy-duty jackets only (see 7.6.1).
† See Appendix H.
‡ See Table 7.6-14.

Copyright National Electrical Manufacturers Association
Provided by IHS under license with NEMA
No reproduction or networking permitted without license from IHS

Not for Resale

Table 7.6-8
Three-conductor Types SHD and SHD-GC Portable Power Cables
for 100 Percent Insulation Level (Grounded Neutral) Only

Conductor Size, AWG†	Insulation Thickness		Jacket Thickness		Outside Diameter*		Test Voltage, kV Cables with Ozone-resisting Insulation	
	mils	mm	mils	mm	inches	mm	a-c	d-c
2001 TO 3000 VOLTS								
8	125	3.18	155	3.94	1.42	36.1	10	30
6	140	3.56	170	4.32	1.62	41.1	11.5	34.5
4	140	3.56	190	4.83	1.77	45.0	11.5	34.5
3	140	3.56	190	4.83	1.84	46.7	11.5	34.5
2	140	3.56	190	4.83	1.92	48.8	11.5	34.5
1	140	3.56	205	5.21	2.04	51.8	11.5	34.5
1/0	140	3.56	205	5.21	2.18	55.4	11.5	34.5
2/0	140	3.56	205	5.21	2.29	58.2	11.5	34.5
3/0	140	3.56	220	5.59	2.45	62.2	11.5	34.5
4/0	140	3.56	235	5.97	2.62	66.5	11.5	34.5
3001 TO 5000 VOLTS								
8	...	...	...	...	...	...	...	...
6	170	4.32	190	4.83	1.78	45.2	13	35
4	170	4.32	190	4.83	1.90	48.3	13	35
3	170	4.32	190	4.83	1.98	50.3	13	35
2	170	4.32	205	5.21	2.09	53.1	13	35
1	170	4.32	205	5.21	2.18	55.4	13	35
1/0	170	4.32	220	5.59	2.34	59.4	13	35
2/0	170	4.32	220	5.59	2.46	62.5	13	35
3/0	170	4.32	235	5.97	2.62	66.5	13	35
4/0	170	4.32	235	5.97	2.76	70.1	13	35
5001 TO 8000 VOLTS								
8	...	...	...	...	...	...	...	...
6	...	...	...	...	...	...	...	...
4	220	5.59	205	5.21	2.14	54.4	18	45
3	220	5.59	205	5.21	2.21	56.1	18	45
2	220	5.59	220	5.59	2.32	58.9	18	45
1	220	5.59	220	5.59	2.41	61.2	18	45
1/0	220	5.59	220	5.59	2.55	64.8	18	45
2/0	220	5.59	235	5.97	2.69	68.3	18	45
3/0	220	5.59	235	5.97	2.82	71.6	18	45
4/0	220	5.59	250	6.35	2.99	75.9	18	45
8001 TO 15000 VOLTS								
8	...	...	...	...	...	...	...	...
6	...	...	...	...	...	...	...	...
4	...	...	...	...	...	...	...	...
3	...	...	...	...	...	...	...	...
2	330	8.38	250	6.35	2.85	72.4	27	70
1	330	8.38	250	6.35	2.94	74.7	27	70
1/0	330	8.38	250	6.35	3.08	78.2	27	70
2/0	330	8.38	265	6.73	3.22	81.8	27	70
3/0	330	8.38	265	6.73	3.35	85.1	27	70
4/0	330	8.38	280	7.11	3.52	89.4	27	70

* These diameters apply to cables with extra-heavy-duty jackets only (see 7.6.1).
† See Table 7.6-14.

Copyright National Electrical Manufacturers Association
Provided by IHS under license with NEMA
No reproduction or networking permitted without license from IHS

Not for Resale

Table 7.6-9
Single-conductor Type SH Portable Power Cables for
100 Percent Insulation Level (Grounded Neutral) Only

Conductor Size, AWG or MCM†	Insulation Thickness		Jacket Thickness		Outside Diameter*		Test Voltage, kV Cables with Ozone-resisting Insulation	
	mils	mm	mils	mm	inches	mm	a-c	d-c
2001 TO 3000 VOLTS								
8	125	3.18	110	2.79	0.82	20.8	10	30
6	140	3.56	125	3.18	0.92	23.4	11.5	34.5
4	140	3.56	125	3.18	0.98	24.9	11.5	34.5
3	140	3.56	140	3.56	1.04	26.4	11.5	34.5
2	140	3.56	140	3.56	1.08	27.4	11.5	34.5
1	140	3.56	140	3.56	1.12	28.4	11.5	34.5
1/0	140	3.56	155	3.94	1.20	30.4	11.5	34.5
2/0	140	3.56	155	3.94	1.25	31.8	11.5	34.5
3/0	140	3.56	155	3.94	1.31	33.3	11.5	34.5
4/0	140	3.56	155	3.94	1.38	35.1	11.5	34.5
250	155	3.94	170	4.32	1.49	37.8	13	35
300	155	3.94	170	4.32	1.55	39.4	13	35
350	155	3.94	170	4.32	1.61	40.9	13	35
400	155	3.94	170	4.32	1.66	42.2	13	35
450	155	3.94	170	4.32	1.75	44.4	13	35
500	155	3.94	170	4.32	1.79	45.5	13	35
3001 TO 5000 VOLTS								
8	...	...	...	...	...	...	...	...
6	170	4.32	125	3.18	0.98	24.9	13	35
4	170	4.32	140	3.56	1.07	27.2	13	35
3	170	4.32	140	3.56	1.10	28.0	13	35
2	170	4.32	140	3.56	1.14	29.0	13	35
1	170	4.32	155	3.94	1.22	31.0	13	35
1/0	170	4.32	155	3.94	1.26	32.0	13	35
2/0	170	4.32	155	3.94	1.31	33.3	13	35
3/0	170	4.32	155	3.94	1.37	34.8	13	35
4/0	170	4.32	155	3.94	1.44	36.6	13	35
250	190	4.83	170	4.32	1.52	38.6	13	35
300	190	4.83	170	4.32	1.62	41.1	13	35
350	190	4.83	170	4.32	1.67	42.4	13	35
400	190	4.83	190	4.83	1.76	44.7	13	35
450	190	4.83	190	4.83	1.81	46.0	13	35
500	190	4.83	190	4.83	1.85	47.0	13	35
5001 TO 8000 VOLTS								
8	...	...	...	...	...	...	...	...
6	...	...	...	...	...	...	...	...
4	220	5.59	155	3.94	1.20	30.5	18	45
3	220	5.59	155	3.94	1.23	31.2	18	45
2	220	5.59	155	3.94	1.27	32.3	18	45
1	220	5.59	155	3.94	1.31	33.3	18	45
1/0	220	5.59	155	3.94	1.36	34.5	18	45
2/0	220	5.59	155	3.94	1.41	35.8	18	45
3/0	220	5.59	170	4.32	1.50	38.1	18	45
4/0	220	5.59	170	4.32	1.56	39.6	18	45
250	220	5.59	170	4.32	1.62	41.1	18	45
300	220	5.59	190	4.83	1.71	43.4	18	45
350	220	5.59	190	4.83	1.77	45.0	18	45
400	220	5.59	190	4.83	1.82	46.2	18	45
450	220	5.59	190	4.83	1.87	47.5	18	45
500	220	5.59	190	4.83	1.92	48.8	18	45

* These diameters apply to cables with extra-heavy-duty jackets only (see 7.6.1).
† See Table 7.6-14.

(Continued)

Copyright National Electrical Manufacturers Association
Provided by IHS under license with NEMA
No reproduction or networking permitted without license from IHS

Not for Resale

Table 7.6-9 (Continued)
Single-conductor Type SH Portable Power Cables for
100 Percent Insulation Level (Grounded Neutral) Only

Conductor Size, AWG or MCM†	Insulation Thickness		Jacket Thickness		Outside Diameter*		Test Voltage, kV Cables with Ozone-resisting Insulation	
	mils	mm	mils	mm	inches	mm	a-c	d-c
8001 TO 15000 VOLTS								
2	330	8.38	170	4.32	1.52	38.6	27	70
1	330	8.38	170	4.32	1.56	39.6	27	70
1/0	330	8.38	170	4.32	1.60	40.6	27	70
2/0	330	8.38	170	4.32	1.66	42.2	27	70
3/0	330	8.38	190	4.83	1.75	44.4	27	70
4/0	330	8.38	190	4.83	1.81	46.0	27	70
250	330	8.38	190	4.83	1.86	47.2	27	70
300	330	8.38	190	4.83	1.93	49.0	27	70
350	330	8.38	205	5.21	2.01	51.1	27	70
400	330	8.38	205	5.21	2.07	52.6	27	70
450	330	8.38	205	5.21	2.12	53.8	27	70
500	330	8.38	205	5.21	2.17	55.1	27	70
15001 TO 23000 VOLTS								
2	...	...	...	...	...	...	...	...
1	455	11.6	190	4.83	1.84	46.7	36	95
1/0	455	11.6	190	4.83	1.89	48.0	36	95
2/0	455	11.6	190	4.83	1.94	49.3	36	95
3/0	455	11.6	205	5.21	2.03	51.6	36	95
4/0	455	11.6	205	5.21	2.09	53.1	36	95
250	455	11.6	205	5.21	2.15	54.6	36	95
300	455	11.6	205	5.21	2.21	56.1	36	95
350	455	11.6	220	5.59	2.30	58.4	36	95
400	455	11.6	220	5.59	2.35	59.7	36	95
450	455	11.6	220	5.59	2.40	61.0	36	95
500	455	11.6	220	5.59	2.45	62.2	36	95
23001 TO 28000 VOLTS								
2	...	...	...	...	...	...	...	...
1	530	13.5	205	5.21	2.03	51.6	42	105
1/0	530	13.5	205	5.21	2.07	52.6	42	105
2/0	530	13.5	205	5.21	2.13	54.1	42	105
3/0	530	13.5	205	5.21	2.19	55.6	42	105
4/0	530	13.5	205	5.21	2.25	57.2	42	105
250	530	13.5	220	5.59	2.33	59.2	42	105
300	530	13.5	220	5.59	2.40	61.0	42	105
350	530	13.5	220	5.59	2.45	62.2	42	105
400	530	13.5	220	5.59	2.51	63.8	42	105
450	530	13.5	235	5.97	2.59	65.8	42	105
500	530	13.5	235	5.97	2.64	67.1	42	105

* These diameters apply to cables with extra-heavy-duty jackets only (see 7.6.1).
† See Table 7.6-14.

Copyright National Electrical Manufacturers Association
Provided by IHS under license with NEMA
No reproduction or networking permitted without license from IHS

Not for Resale

Table 7.6-10
Five-conductor Types W and G† and Six-conductor Type W Portable Power Cables for 0 to 600 Volts

Power Conductor Size, AWG (See Table 7.6-14)	Grounding Conductor		Insulation Thickness		Outside Diameters				Test Voltage, kV			
					Five-conductor Cables		Six-conductor Cables		Cables with Other than Ozone-resisting Insulation		Cables with Ozone-resisting Insulation	
	Size, AWG	Number of Strands	mils	mm	inches	mm	inches	mm	a-c	d-c	a-c	d-c
8	8	49	60	1.52	1.07	27.2	1.18	30.0	3.5	10.5	6	18
6	7	49	60	1.52	1.21	30.7	1.31	33.3	3.5	10.5	6	18
4	5	133	60	1.52	1.40	35.6	1.52	38.6	3.5	10.5	6	18
3	4	133	60	1.52	1.48	37.6	1.61	40.9	3.5	10.5	6	18
2	3	133	60	1.52	1.61	40.9	1.75	44.4	3.5	10.5	6	18
1	2	133	80	2.03	1.88	47.8	2.05*	52.1*	4	12	7.5	22.5
1/0	1	133	80	2.03	1.96	49.8	2.13*	54.1*	4	12	7.5	22.5
2/0	1/0	259	80	2.03	2.13*	54.1*	2.32*	58.9*	4	12	7.5	22.5
3/0	2/0	259	80	2.03	2.26*	57.4*	2.49*	63.2*	4	12	7.5	22.5
4/0	3/0	259	80	2.03	2.46*	62.5*	2.71*	68.8*	4	12	7.5	22.5

* These diameters apply to cables with extra-heavy-duty jackets only (see 7.6.1).
† Type G cables shall be used for the internal wiring of equipment only.

Table 7.6-11
Two- and Three-conductor Portable Power Cables Type PG (Power, Ground) for 0 to 600 Volts

Power Conductor Size, AWG or MCM (See Table 7.6-14)	Grounding Conductor		Power Conductor Insulation Thickness		Outside Diameters				Test Voltage, kV			
					Two-conductor Cables		Three-conductor Cables		Cables with Other than Ozone-resisting Insulation		Cables with Ozone-resisting Insulation	
	Size, AWG	Number of Strands	mils	mm	inches	mm	inches	mm	a-c	d-c	a-c	d-c
8	8	49	60	1.52	0.84	21.3	0.93	23.6	3.5	10.5	6	18
6	8	49	60	1.52	0.93	23.6	1.03	26.2	3.5	10.5	6	18
4	6	49	60	1.52	1.08	27.4	1.20	30.5	3.5	10.5	6	18
3	6	49	60	1.52	1.17	29.7	1.27	32.3	3.5	10.5	6	18
2	5	133	60	1.52	1.27	32.3	1.34	34.0	3.5	10.5	6	18
1	4	133	80	2.03	1.44	36.6	1.52	38.6	4	12	7.5	22.5
1/0	3	133	80	2.03	1.52	38.6	1.68	42.7	4	12	7.5	22.5
2/0	2	133	80	2.03	1.65	41.9	1.79	45.5	4	12	7.5	22.5
3/0	1	133	80	2.03	1.77	45.0	1.93	49.0	4	12	7.5	22.5
4/0	1/0	259	80	2.03	1.92	48.8	2.13*	54.1*	4	12	7.5	22.5
250	2/0	259	95	2.41	2.16*	54.9*	2.39*	60.7*	5	15	8.5	25.5

* These diameters apply to cables with extra-heavy-duty jackets only (see 7.6.1).

Copyright National Electrical Manufacturers Association
Provided by IHS under license with NEMA
No reproduction or networking permitted without license from IHS

Not for Resale

Table 7.6-12
Two- and Three-conductor Portable Power Cables Type PCG (Power, Control, Ground) for 0 to 600 Volts

Power Conductor Size, AWG or MCM (See Table 7.6-14)	Grounding Conductor		Power Conductor Insulation Thickness		Outside Diameters				Test Voltage, kV			
					Two-conductor Cables		Three-conductor Cables		Cables with Other than Ozone-resisting Insulation		Cables with Ozone-resisting Insulation	
	Size, AWG	Number of Strands	mils	mm	inches	mm	inches	mm	a-c	d-c	a-c	d-c
8	8	49	60	1.52	0.94	23.9	1.03	26.2	3.5	10.5	6	18
6	8	49	60	1.52	0.98	24.9	1.18	30.0	3.5	10.5	6	18
4	6	49	60	1.52	1.10	27.9	1.29	32.8	3.5	10.5	6	18
3	6	49	60	1.52	1.20	30.5	1.31	33.3	3.5	10.5	6	18
2	5	133	60	1.52	1.29	32.8	1.39	35.3	3.5	10.5	6	18
1	4	133	80	2.03	1.44	36.6	1.52	38.6	4	12	7.5	22.5
1/0	3	133	80	2.03	1.52	38.6	1.68	42.7	4	12	7.5	22.5
2/0	2	133	80	2.03	1.65	41.9	1.79	45.5	4	12	7.5	22.5
3/0	1	133	80	2.03	1.77	45.0	1.93	49.0	4	12	7.5	22.5
4/0	1/0	259	80	2.03	1.92	48.8	2.13*	54.1*	4	12	7.5	22.5
250	2/0	259	95	2.41	2.16*	54.9*	2.39*	60.7*	5	15	8.5	25.5
10†	...	...	45†	1.14†	...	...	...	...	3	9	5	15

* These diameters apply to cables with extra-heavy-duty jackets only (see 7.6.1).
† Control conductors for all PCG cables consist of a minimum of 104 strands of annealed uncoated copper with separator, 45 mils (1.14 mm) of insulation, and braid.

Table 7.6-13
Single-conductor Nonshielded Portable Cables for Temporary Grounding of Overhead Lines

Conductor Size, AWG	Insulation Thickness		Jacket Thickness		Outside Diameter		Test Voltage, kV: Cables with Ozone-resisting Insulation	
	mils	mm	mils	mm	inches	mm	a-c	d-c
8	125	3.18	95	2.41	0.60	15.2	11.5	34.5
6	125	3.18	95	2.41	0.65	16.5	11.5	34.5
4	125	3.18	95	2.41	0.70	17.8	11.5	34.5
3	125	3.18	95	2.41	0.74	18.8	11.5	34.5
2	125	3.18	95	2.41	0.77	19.6	11.5	34.5
1	125	3.18	95	2.41	0.82	20.8	11.5	34.5
1/0	125	3.18	95	2.41	0.86	21.8	11.5	34.5
2/0	125	3.18	95	2.41	0.92	23.4	11.5	34.5
3/0	125	3.18	95	2.41	0.97	24.6	11.5	34.5
4/0	125	3.18	95	2.41	1.04	26.4	11.5	34.5

Copyright National Electrical Manufacturers Association
Provided by IHS under license with NEMA
No reproduction or networking permitted without license from IHS

Not for Resale

Copyright National Electrical Manufacturers Association
Provided by IHS under license with NEMA
No reproduction or networking permitted without license from IHS

WC 3-80 6470247 0004791 1

Table 7.6-14
Conductors

Power Conductors						Grounding Conductors (Round Cables)							
						Two-conductor Type G Cables		Three-conductor Type SHD-GC and Type SHC-GC Cables		Three-conductor Type G Cables		Four-conductor Type G Cables	
Conductor Size, AWG or MCM	Minimum Number of Wires per Conductor	Diameter of Each Wire		Conductor Diameter		Size of Grounding Conductors, AWG	Minimum Number of Wires per Conductor	Size of Grounding Conductors, AWG	Minimum Number of Wires per Conductor	Size of Grounding Conductors, AWG	Minimum Number of Wires per Conductor	Size of Grounding Conductors, AWG	Minimum Minimum of Wires per Conductor
		mils	mm	inches	mm								
8	49	18.4	0.467	0.166	4.22	10	19	...	...	12	19	12	19
6	49	23.1	0.587	0.208	5.28	10	19	10	19	10	19	12	19
4	49	29.2	0.742	0.263	6.68	8	49	8	49	8	49	10	19
3	49	32.8	0.833	0.295	7.49	6	49	7	49	8	49	10	19
2	133	22.3	0.566	0.335	8.51	6	133	6	133	8	49	9	49
1	133	25.1	0.638	0.377	9.58	5	133	5	133	7	49	8	49
1/0	133	28.2	0.716	0.423	10.74	4	133	4	133	6	133	7	49
2/0	133	31.6	0.803	0.474	12.04	3	133	3	133	5	133	6	133
3/0	259	25.5	0.648	0.536	13.61	2	259	2	133	4	133	5	133
4/0	259	28.6	0.726	0.601	15.27	1	259	1	133	3	133	4	133
250	259	31.1	0.790	0.653	16.59	1/0	259	1/0	259	2	259	3	133
300	259	34.0	0.864	0.714	18.14	1/0	259	1/0	259	1	259	3	133
350	259	36.8	0.934	0.773	19.63	2/0	259	2/0	259	1	259	2	259
400	259	39.3	0.998	0.825	20.96	3/0	259	3/0	259	1/0	259	1	259
450	259	41.7	1.060	0.876	22.25	3/0	259	3/0	259	1/0	259	1	259
500	259	43.9	1.115	0.922	23.42	4/0	259	4/0	259	2/0	259	1/0	259
550	427	35.9	0.912	0.969	24.61	...	...	...	...	...	...	...	...
600	427	37.5	0.952	1.013	25.73	...	...	...	...	...	...	...	...
650	427	39.0	0.991	1.053	26.75	...	...	...	...	...	...	...	...
700	427	40.5	1.029	1.094	27.79	...	...	...	...	...	...	...	...
750	427	41.9	1.064	1.131	28.73	...	...	...	...	...	...	...	...
800	427	43.3	1.100	1.169	29.69	...	...	...	...	...	...	...	...
900	427	45.9	1.166	1.239	31.47	...	...	...	...	...	...	...	...
1000	427	48.4	1.229	1.307	33.20	...	...	...	...	...	...	...	...

Not for Resale

7.7 Single- and Multiple-conductor Flexible Cords

7.7.1 Scope. This section covers single-, two-, three- and four-conductor flexible cords with conductor sizes 18 to 10 AWG, inclusive, with rubber insulation and with heavy-duty or medium-duty jackets.

Multiple-conductor cords are intended for hard service (300 volts maximum) or extra hard service (600 volts maximum).

Single-conductor cords do not have a service designation. For single-conductor cords, sizes 18 and 16 AWG, the maximum voltage rating is 300 volts. For single-conductor cords, sizes 14, 12 and 10 AWG, the maximum voltage rating is 600 volts.

Ampacities, type designations and voltage ratings are given in Appendix N.▲

Remote control and drill cords for use in underground coal mines in accordance with U.S. Bureau of Mines requirements for Electric Motor-Driven Mine Equipment and Accessories (Schedule 2G) are covered in Appendix N.▲

7.7.2 Conductors

▲**7.7.2.1** The conductors shall be annealed uncoated or coated copper wire and shall meet the requirements given in Part 2 except the conductor resistance, as specified in paragraph 2.5, is not required.

The conductor size shall be determined by the method in paragraph 6.3.2.1 which specifies cross-sectional area by diameter measurement, or by paragraph 6.3.2.2 which specifies cross-sectional area by weight.

7.7.2.2 *Sizes.* The conductors shall be sizes 18 through 10 AWG.

7.7.2.3 *Stranding.* The strands in the conductors shall be no smaller than 36 AWG and no larger than 30 AWG. The individual strands of the conductors shall be bunch stranded (twisted together) or rope stranded. The lay of twist shall not exceed the values given in Table 7.7-1.

7.7.2.4 *Separator.* A separator, if used, shall consist of a close covering of cotton, paper or other material. Where a separator is not used, the individual strands of the conductor shall be separately coated in accordance with 2.1.1.2.

7.7.3 Insulation. The insulation shall meet the requirements of 3.7 through 3.13 or of 3.18, as applicable, except that the thickness shall be in accordance with Table 7.7-2 and shall be measured as follows:

Table 7.7-1
Conductor Requirements

Conductor Size, AWG	Cross-sectional Area, CM	Maximum Lay of Twist			
		Bunch Stranded (Lay of Strands)		Rope Stranded (Lay of Ropes)	
		inches	mm	inches	mm
18	1 620	1.00	25.4	1.88	47.8
16	2 580	1.25	31.8	2.13	54.1
14	4 110	1.63	41.4	2.50	63.5
12	6 530	2.00	50.8	3.13	79.5
10	10 380	2.50	63.5	3.13	79.5

Table 7.7-2
Insulation Thicknesses

Conductor Size, AWG	Hard Service Multiple-conductor Cords				Extra Hard Service Multiple-conductor Cords and Single-conductor Cords			
	Average		Minimum		Average		Minimum	
	mils	mm	mils	mm	mils	mm	mils	mm
18–16	30	0.76	27*	0.69	30	0.76	27*	0.69
14	30	0.76	27*	0.69	45	1.14	41†	1.04
12	30	0.76	27*	0.69	45	1.14	41†	1.04
10	45	1.14	41†	1.04	45	1.14	41†	1.04

* The minimum thickness at the line of contact between conductors shall be not less than 25 mils (0.64 mm).
† The minimum thickness at the line of contact between conductors shall be not less than 39 mils (0.99 mm).

▲Editorially revised.

Copyright National Electrical Manufacturers Association
Provided by IHS under license with NEMA
No reproduction or networking permitted without license from IHS

Not for Resale

7.7.3.1 *Average Thickness.* The average thickness of the insulation shall be determined in accordance with 6.4.3.1.

7.7.3.2 *Minimum Thickness.* The minimum thickness of the insulation shall be determined by a pin-gauge dial micrometer which exerts a force of 25 plus or minus 2 grams on the specimen. The pin shall be 0.437 inch (11.1 mm) long and 0.043 inch (1.09 mm) in diameter, and the end of the presser foot which makes contact with the specimen shall be a flat rectangle 0.043 inch (1.09 mm) wide by 0.312 inch (7.92 mm) long.

The conductor and the separator, if any, shall be removed carefully. The specimen of insulation shall be placed carefully on the pin. The specimen shall be so located that the entire length of the presser foot will make contact with it. The presser foot shall be permitted to come to rest gently on the specimen, and the reading shall be taken immediately.

The specimen shall be rotated and several measurements taken in order to determine the actual minimum thickness. The presser foot shall not be in contact with the specimen when the latter is rotated.

7.7.4 Conductor Assembly

7.7.4.1 *Conductor Identification.* Conductor identification shall be obtained by means of colored insulating compounds, braids or tapes in the following sequence:

Two conductors —black, white
Three conductors—black, white, green, or black, white, red
Four conductors —black, white, red, green

7.7.4.2 *Length of Lay.* The length of lay of insulated conductors shall not exceed the values given in Table 7.7-3.

7.7.4.3 *Fillers.* Fillers shall be placed in the interstices of the assembly (see 5.4).

7.7.4.4 *Binder.* A binder, if used, shall be a tape, braid, wrap of multiple ends of thread, or a combination of these, and shall be applied over the assembled conductors.

7.7.5 Jackets

● **7.7.5.1** *Heavy-duty Jackets.* The jacket shall be a black compound of natural rubber, SBR synthetic rubber, or neoprene or a black or colored compound of nitrile-butadiene/polyvinyl-chloride or chlorosulfonated polyethylene or crosslinked chlorinated polyethylene which meets the applicable requirements of Table 7.7-4.

● **7.7.5.2** *Medium-duty Jackets.* The jacket shall be a black or colored compound of natural rubber, SBR synthetic rubber, neoprene, nitrile-butadiene/polyvinyl-chloride, chlorosulphonated polyethylene, crosslinked chlorinated polyethylene, ethylene propylene rubber, polyvinyl-chloride, or thermoplastic chlorinated polyethylene which meets the applicable requirements of Table 7.7-5.

● **7.7.5.3** *Oil Resistance.* The jacket of an oil-resistant cord shall be one of those meeting the requirements of the 121 °C oil immersion test given in Table 7.7-4 or 7.7-5.

7.7.5.4 *Application.* The jacket shall be applied over the insulation of a single-conductor cord or over the assembled conductors or binder of multiple-conductor cords.

7.7.5.5 *Reinforcement.* Reinforcement, if used, shall consist of a braid or a serving of fibrous material under the entire jacket or completely embedded in the jacket.

7.7.5.6 *Thickness.* The thickness of the jacket shall be in accordance with Table 7.7-6 and shall be determined in accordance with 7.7.3.1 and 7.7.3.2.

Table 7.7-3
Maximum Length of Lay

Conductor Size, AWG	Two Conductor		Three Conductor		Four Conductor	
	inches	mm	inches	mm	inches	mm
18	2.00	50.8	2.25	57.2	2.50	63.5
16	2.25	57.2	2.50	63.5	2.75	69.8
14	2.50	63.5	3.25	82.6	3.75	95.2
12	3.00	76.2	3.50	88.9	4.25	108.0
10	3.50	88.9	4.00	101.6	4.75	120.6

▲Editorially revised.

Copyright National Electrical Manufacturers Association 983.
Provided by IHS under license with NEMA
No reproduction or networking permitted without license from IHS

Not for Resale

7.7.6 Overall Diameters. The minimum average overall diameter of the completed cord shall be in accordance with Table 7.7-7.

7.7.7 Strength of Completed Cord. The mechanical strength of completed two- and three-conductor cord, sizes 16 and 18 AWG, shall be determined by means of a freely hanging weight or a suitable testing machine and shall be such that no conductor will break when the test force given in Table 7.7-8 is applied for 1 minute.

7.7.8 Tests. The cord shall be tested in accordance with Part 6 and shall meet the requirements specified in 7.7, except as otherwise specified in 7.7.8.1.

7.7.8.1 *Electrical Tests.* Each length of completed single-conductor cord shall withstand either the direct-current or the alternating-current spark test voltage given in Table 7.7-9.

Each length of completed multiple-conductor cord shall withstand either the alternating-current voltage or the alternating-current spark test voltage given in Table 7.7-9.

The alternating-current voltage shall be applied for 15 seconds between conductors without immersing the cord in any liquid.

The alternating-current test and the alternating-current spark test shall be in accordance with Underwriters Laboratories Inc., *Standards for Flexible Cord and Fixture Wire,* UL 62, 14th Edition. ▲

The direct-current spark test shall be in accordance with 6.24.5.

Table 7.7-4
Heavy-duty Jackets

	Natural Rubber	SBR	Neoprene	Nitrile-butadiene/-polyvinyl-chloride*	Chloro-sulfonated Poly-ethylene	Chlorinated Polyethylene, Crosslinked ●
Physical requirements						
Tensile strength, minimum						
psi	3500	1800	1800	1800	1800	1800
MPa	24.1	12.4	12.4	12.4	12.4	12.4
Tensile stress at 200 percent elongation, minimum						
psi	500	...	500	500	500	500
MPa	3.45	...	3.45	3.45	3.45	3.45
Elongation at rupture, minimum, percent	500	300	300	300	300	300
Set, maximum, percent	15	20	20	30	30	30
Tear resistance, minimum						
pounds per inch	40	...	...	...	...	...
kN/m	7.01 ▲	...	...	...	...	...
Aging requirements						
After air oven test at 100°C ± 1°C for 168 hours						
Tensile strength, minimum, percentage of unaged value	...	...	50	50	85	85
Elongation at rupture, minimum, percentage of unaged value	...	...	50	50	65	65
After air oven test at 70°C ± 1°C for 168 hours						
Tensile strength, minimum						
psi	...	1600	...	...	...	...
MPa	...	11.0	...	...	...	...
Elongation at rupture, minimum, percent	...	250	...	...	...	...
After oxygen pressure test at 70°C ± 1°C for 96 hours						
Tensile strength, minimum						
psi	2500	1600	...	...	...	...
MPa	17.2	11.0	...	...	...	...
Elongation at rupture, minimum, percent	400	250	...	...	...	...
After oil immersion test at 121°C ± 1°C for 18 hours– tensile strength and elongation, minimum, percentage of unaged value	...	...	60	60	60	60

* Suitable for a minimum temperature of −10°C (+14°F).

● Added 9-15-1983.
▲ Editorially revised.

Copyright National Electrical Manufacturers Association
Provided by IHS under license with NEMA
No reproduction or networking permitted without license from IHS

Not for Resale

Copyright National Electrical Manufacturers Association
Provided by IHS under license with NEMA
No reproduction or networking permitted without license from IHS

Table 7.7-5
Medium-duty Jackets

	Natural Rubber or SBR	Neoprene	Nitrile-butadiene/-polyvinyl-chloride*	Chloro-sulfonated Poly-ethylene	Chlorinated Polyethylene, Crosslinked	Ethylene Propylene Rubber	Polyvinyl Chloride*	Chlorinated Polyethylene, Thermoplastic
Physical requirements								
Tensile strength, minimum								
psi	1500	1500	1500	1500	1500	1500	1600	1400
MPa	10.3	10.3	10.3	10.3	10.3	10.3	11.0	9.6
Elongation at rupture, minimum, percent	300	300	250	300	300	300	250	150
Set, maximum, percent	20	20	30	30	35	...	...	...
Aging requirements								
After air-oven test at 121°C for 168 hours								
Tensile strength, minimum, percentage of unaged value	...	...	...	...	...	...	50	85
Elongation at rupture, minimum, percentage of unaged value		...	...	...	...	...	...	50
After air oven test at 100°C ± 1°C for 168 hours–tensile strength and elongation at rupture, minimum, percentage of unaged value	...	50	50	...	55	50	...	...
After air oven test at 70°C ± 1°C for 168 hours–tensile strength and elongation at rupture, minimum, percentage of unaged value	...	...	...	70	...	...	...	...
After air pressure heat test at 127°C ± 1°C for 20 hours–tensile strength and elongation at rupture, minimum, percentage of unaged value	...	...	...	...	...	50	...	...
After oxygen pressure test at 70°C ± 1°C for 96 hours–tensile strength and elongation at rupture, minimum, percentage of unaged value	70	...	...	70	...	...	50	...
After oxygen pressure test at 80°C ± 1°C for 168 hours–tensile strength and elongation at rupture, minimum, percentage of unaged value	...	...	...	...	...		...	...
After oil immersion test at 121°C ± 1°C for 18 hours–tensile strength and elongation, minimum, percentage of unaged value	...	60	60	...	60	...		...
After oil immersion test at 100°C ± 1°C for 18 hours—tensile strength and elongation, minimum, percentage of unaged value	...	...	...	...	...	...	...	60

*Suitable for a minimum temperature of −10°C (+14°F).

▲ Revised 9-15-1983.

WC 3-80
6470247 0004795 9
Not for Resale
C-11

Table 7.7-6
Average and Minimum Thicknesses of Jackets

Conductor Size, AWG	Single-conductor Cords				Multiple-conductor Cords: Hard Service Two to Four Conductors				Multiple-conductor Cords: Extra Hard Service Two to Four Conductors			
	Average		Minimum		Average		Minimum		Average		Minimum	
	mils	mm	mils	mm	mils	mm	mils	mm	mils	mm	mils	mm
18	30	0.76	23	0.58	30	0.76	23	0.58	60	1.53	48	1.22
16	30	0.76	23	0.58	30	0.76	23	0.58	60	1.53	48	1.22
14	30	0.76	23	0.58	30	0.76	23	0.58	80	2.04	64	1.63
12	30	0.76	23	0.58	45	1.14	36	0.91	95	2.42	76	1.94
10	30	0.76	23	0.58	60	1.55	48	1.22	95	2.42	76	1.94

Table 7.7-7
Overall Diameters

Type of Cord	Conductor Size, AWG	Two Conductor		Three Conductor		Four Conductor	
		Minimum	Maximum	Minimum	Maximum	Minimum	Maximum
		inches	inches	inches	inches	inches	inches
Hard service	18	0.280	0.315	0.300	0.335	0.325	0.365
	16	0.305	0.340	0.325	0.360	0.350	0.395
	14	0.335	0.375	0.360	0.395	0.390	0.435
	12	0.405	0.455	0.425	0.475	0.465	0.520
	10	0.540	0.606	0.565	0.635	0.625	0.700
Extra hard service	18	0.340	0.385	0.360	0.400	0.385	0.430
	16	0.365	0.410	0.385	0.430	0.410	0.460
	14	0.495	0.550	0.520	0.575	0.560	0.620
	12	0.565	0.625	0.590	0.655	0.640	0.710
	10	0.615	0.685	0.650	0.720	0.700	0.775

Table 7.7-8
Strength of Completed Cord

Type of Cord	Conductor Size, AWG	Two- and Three-conductor Cords Test Force	
		Pounds	kg
Hard service	18	175	79.4
	16	200	90.7
Extra hard service	18	200	90.7
	16	225	102

Table 7.7-9
Test Voltages

Conductor Size, AWG	Test Voltages, kV		
	a-c Voltage Test	a-c Spark Test	d-c Spark Test
18	2.0	6.0	...
16	2.0	6.0	...
14	3.0	7.0	9.0
12	3.0	7.0	9.0
10	3.0	7.0	9.0

Copyright National Electrical Manufacturers Association
Provided by IHS under license with NEMA
No reproduction or networking permitted without license from IHS

Not for Resale

7.8 Control Cables

7.8.1 Scope. This section covers single-* and multiple-conductor rubber-insulated control cables for use aerially and in ducts, conduit and trays and multiple-conductor cables for direct burial. The different types of cable are for service as follows:

▲Type A—Supervisory cables for monitoring, data recording and conveyance of information such as communication, telemetering, temperature, pressure, flow, indicating lights—maximum circuit voltage rating 300 volts.

▲Type B—Control cables for operation and interconnection of protective devices and for general use—maximum circuit voltage rating 600 volts.

▲Type C—Control cables for connection to circuits with heavy magnetic trip or break devices, where inductively induced overvoltages may occur—maximum circuit voltage rating 1,000 volts.

▲Type D—Control, pilot wire and supervisory cables used in conjunction with high-voltage lines and installed parallel to such lines where faults in the high-voltage cables will result in above-ground voltage in the control cable sheaths or surrounding ground—maximum circuit voltage rating 600 volts, insulation level to ground 5,000 volts.†

* Single-conductor control cables shall not be used for direct earth burial.

† May be in the form of belt insulation.

7.8.2 Conductors

7.8.2.1 Conductors shall be made of annealed coated copper wires in accordance with Part 2.

7.8.2.2 Sizes 19, 18 and 16 AWG shall be solid or Class B stranded. Sizes 14, 12, 10 and 9 AWG shall be Class B or C stranded.

7.8.3 Insulation

7.8.3.1 *Grades.* The insulation shall be one of the grades covered in 3.13, 3.14, 3.15, 3.17 or 3.18.

7.8.3.2 *Thickness.* The average thickness of insulation shall be not less than that given in Table 7.8-1. The minimum thickness shall be not less than 90 percent of that given in the table.

7.8.4 Covering Over Insulation for Multiple-conductor Cables

7.8.4.1 No jacket or braid over the insulation is required for Type A cables.

● **7.8.4.2** Type B, C and D cables with insulation in accordance with 3.13, 3.14 and 3.15 shall have a 15-mil (0.38-mm) nominal [12-mil (0.30-mm) minimum] thickness of one of the following jackets:

Neoprene.....4.13.4
Polyvinyl chloride.....4.13.5
Polyethylene.....4.13.6
Chlorinated polyethylene, thermoplastic ... 4.13.7
Nitrile-butadiene/polyvinyl chloride....4.13.9
Chlorosulfonated polyethylene 4.13.10
Chlorinated polyethylene, crosslinked 4.13.11

7.8.4.3 Type B, C and D cables with insulation in accordance with 3.17 shall have a braid which consists of a glass yarn not smaller than 150–1/0, is applied at an angle of not less than 35 degrees from the axis of the conductor, and is treated to resist moisture, flame and fraying.

7.8.4.4 Type B, C and D cables with insulation in accordance with 3.18 are not required to have a covering over the insulation.

Table 7.8-1
Insulation Thickness

Conductor Size, AWG	Insulation Thickness					
	300 Volts‡		600 Volts‡		1000 Volts‡	
	mils	mm	mils	mm	mils	mm
19	25	0.64	30	0.76	...	...
18	25	0.64	30	0.76	...	...
16	25	0.64	30	0.76	45	1.14
14	30	0.76	45	1.14	60	1.52
12	...	...	45	1.14	60	1.52
10	...	...	45	1.14	60	1.52
9	...	...	45	1.14	60	1.52

‡ These voltages represent the maximum rated circuit voltage.

Copyright National Electrical Manufacturers Association
Provided by IHS under license with NEMA
No reproduction or networking permitted without license from IHS
Not for Resale

▲ 7.8.5 Conductor Identification

▲ **7.8.5.1** Conductor identification, if used, shall be by any suitable means (see Appendix K) except that conductor identification for silicone-insulated cables (see 3.17) shall be in accordance with 7.8.5.2.

▲ **7.8.5.2** When conductor identification is required for silicone-insulated cables, it shall be by means of colored braids. The color sequence shall be in accordance with Table 7.8-2. For cables composed of more than sixteen conductors, these sixteen color combinations shall be repeated in regular sequence to the extent necessary to provide such identification of all conductors.

When more than one color is required, the first color named in the table shall be the background color. The shades of the colors shall approximate those identified by the numbers given in Table K-6.

The tracers shall consist of three carriers with each carrier composed of a minimum of two ends. Where two tracers are used, they shall be crossed.

Table 7.8-2

Conductor Number	Background or Base Color	First Tracer Color	Second Tracer Color
1	white	...	...
2	white	black	...
3	white	red	...
4	white	green	...
5	white	orange	...
6	white	blue	...
7	white	red	black
8	white	green	black
9	white	orange	black
10	white	blue	black
11	white	orange	red
12	white	blue	red
13	white	red	green
14	white	orange	green
15	white	orange	blue
16	white	blue	green

▲**7.8.5.3** When conductor identification is required for paired cables with other than silicone insulation, the method shall be by a suitable means (see Appendix K).

7.8.5.4 When circuit identification is required for paired cables with silicone insulation, the method shall be in accordance with 7.8.5.2.

7.8.6 Assembly

7.8.6.1 The conductors or pairs shall be assembled in accordance with Part 5 and the color sequence given in 7.8.5.

7.8.6.2 Type D cables are for varied types of exposure. The design of the protective belt as well as degree of shielding needed and outer protection will depend on conditions of use. The manufacturer should be consulted for further information.*

* This paragraph is approved by NEMA as Authorized Engineering Information.

7.8.7 Jackets and Coverings

● **7.8.7.1** Type A, B, C and D cables with other than silicone insulation shall have an overall jacket which meets the requirements of one of the following:

Neoprene	4.13.3
Polyvinyl chloride	4.13.5
Polyethylene	4.13.6
Chlorinated polyethylene, thermoplastic	4.13.7
Nitrile-butadiene/polyvinyl chloride	4.13.8
Chlorosulfonated polyethylene	4.13.10
Chlorinated polyethylene, crosslinked	4.13.11

7.8.7.2 The average thickness of jackets shall be not less than that given in Table 7.8-3. The minimum thickness at any point shall be not less than 80 percent of that given in the table.

7.8.7.3 Silicone-insulated control cables shall be covered with an asbestos braid closely woven from best quality, long-fibre chrysotile yarn containing not less than 80 percent by weight of asbestos, and having an ASTM magnetic rating not greater than 4. The nominal thickness of the braid shall be 45 mils. The braid shall be treated with a flame-, heat- and moisture-resisting saturant.

Because of the maximum service temperature and other environmental conditions, the use of other coverings or jackets may be considered suitable. The manufacturer should be consulted for further information.*

* This paragraph is approved by NEMA as Authorized Engineering Information.

Copyright National Electrical Manufacturers Association
Provided by IHS under license with NEMA
No reproduction or networking permitted without license from IHS

Not for Resale

Table 7.8-3

Calculated Diameter of Cable Under Jacket		Overall Jacket Thickness			
		Single-conductor Cables		Multiple-conductor Cables	
inches	mm	mils	mm	mils	mm
0.250 or less	6.35 or less	15	0.38	45	1.14
0.251–0.425	6.38–10.80	30	0.76	45	1.14
0.426–0.700	10.82–17.78	45	1.14	60	1.52
0.701–1.500	17.81–38.10	...	...	80	2.03
1.501–2.500	38.13–63.50	...	...	110	2.79
2.501 and larger	63.53 and larger	...	...	140	3.56

7.8.8 Tests. The cable shall be tested in accordance with Part 6 and shall meet the requirements specified in 7.8 except that the final electrical test shall be made without immersion in water. The test voltages shall be as given in Table 7.8-4.

Table 7.8-4

Insulation Thickness		a-c Test Voltages, kV
mils	mm	
25	0.64	1.0
30	0.76	1.0
45	1.14	4.5
60	1.52	6.0

Copyright National Electrical Manufacturers Association
Provided by IHS under license with NEMA
No reproduction or networking permitted without license from IHS

Not for Resale

7.9 Primary Underground Residential Distribution Cables—Butyl Rubber Insulated ▲

▲Deleted 5-12-1982.

Copyright National Electrical Manufacturers Association
Provided by IHS under license with NEMA
No reproduction or networking permitted without license from IHS

Not for Resale

7.10 Metal-clad Cables with Grounding Conductor

7.10.1 Scope. This section covers the construction of two-, three- and four-conductor cross-linked compound-insulated interlocked armored metal-clad cables with a grounding conductor. Power conductors shall be size 14 AWG through 1000 kcmil if of copper, and size 12 AWG through 1000 kcmil if of aluminum.

7.10.2 Conductors. Insulated power conductors and insulated or uninsulated grounding conductors shall be made of copper or aluminum and shall meet the requirements given in Part 2. The grounding conductor shall be cabled with the insulated power conductors in one or more sections.

7.10.2.1 *Cables Rated 0–2000 Volts.* The minimum size of the grounding conductor shall be as given in Table 7.10-1.

Table 7.10-1
Grounding Conductor Size for Cables Rated 0-2000 Volts

Power Conductor Size, AWG or kcmil		Minimum Grounding Conductor Size, AWG	
Copper	Aluminum	Copper	Aluminum
14	12	14	12
12	10	12	10
10-8	8-6	10	8
6-4	4-2	8	6
3-2/0	1-4/0	6	4
3/0-400	...	3	1
...	250-700	3	1
500-1000	750-1000	1	2/0

▲ **7.10.2.2** *Cables Rated 2001 Volts and Above.* The minimum size of the grounding conductor shall be as given in Table 7.10-2.

7.10.3 Conductor Stress Control Layer. Conductor stress control layer shall be used on conductors having rated circuit voltages above 2000 volts. This requirement does not apply to ozone-resisting silicone-rubber-insulated cables.

7.10.4 Insulation. The insulation shall meet the requirements for one of the grades described in Part 3.

7.10.5 Insulation Shielding. Insulation Shielding shall comply with 4.1 and 4.2.

7.10.6 Covering. A tape, braid or jacket shall be applied over the insulation of a nonshielded power conductor and shall comply with Part 4.

7.10.7 Assembly. The insulated power conductors and the grounding conductor shall be cabled together with or without fillers. The direction of lay shall be left-hand. The maximum length of lay shall be in accordance with Part 5 and shall be based on the calculated diameter of the individual power conductor. A suitable binder shall be applied over the assembly.

7.10.8 Armor. An interlocked metal tape armor meeting the requirements of 4.14.7 shall be applied over the assembly.

7.10.9 Tests. The cable shall be tested in accordance with Part 6 and shall meet the requirements specified in 7.10.

Table 7.10-2●
Grounding Conductor Size for Cables Rated 2001 Volts and Above

Power Conductor Size, AWG or kcmil		Minimum Grounding Conductor Size, AWG	
Copper	Aluminum	Copper	Aluminum
8 AWG	8-6 AWG	8	6
6-2	4-1/0	6	4
1-2/0	2/0-250 kcmil	4	2
3/0 AWG-250 kcmil	300-400	3	1
300-400	450-600	2	1/0
450-600	750-900	1	2/0
750-1000	1000	1/0	3/0

▲ Revised 1-17-1980.
● Added 1-17-1980.

Copyright National Electrical Manufacturers Association
Provided by IHS under license with NEMA
No reproduction or networking permitted without license from IHS
Not for Resale

7.11 Nonshielded Single-conductor Power Cable

7.11.1 Scope. This section covers nonshielded single-conductor power cable with rubber insulation and suitable covering intended for use at 2001 to 5000 volts at 100 percent insulation level and 2001 to 3000 volts at 133 percent insulation level under conditions where shields cannot be adequately grounded or where space is inadequate for proper termination of the shielding, as follows (see 4.2 and Appendix G): ▲

(a) Single conductors.
  (1) Unspliced cables in random lay in grounded metal conduit indoors above grade in dry locations.
  (2) Mounted on insulators in free air.
  (3) Aerially, field spun to grounded messenger.

(b) Triplexed single conductors (factory assembled).
  (1) In conduit or cable trays indoors above grade in dry locations.
  (2) Aerially, field spun to a grounded messenger.

Note 1—Care must be taken at joint and terminal locations to have a minimum length of separated conductors. Where field splices are permitted, they should be bound together to keep the phase conductors in contact with each other.*

Note 2—Pulling compounds should be nonconducting.*

* These notes are approved by NEMA as Authorized Engineering Information.

7.11.2 Conductors. The conductors shall be copper or aluminum in accordance with Part 2. The conductor sizes shall be as given in Table 7.11-1.

7.11.3 Insulation. The insulation shall be ozone-resisting rubber which meets the requirements of 3.14, 3.15, or 3.17. The average thickness of the insulation shall be not less than that given in Table 7.11-1 and the minimum thickness at any point shall be not less than 90 percent of this value.

● **7.11.4 Jacket.** A jacket which meets the requirements of 4.13.3 neoprene, 4.13.5 polyvinyl chloride, 4.13.7 thermoplastic chlorinated polyethylene, 4.13.8 nitrile butadiene/polyvinyl chloride, 4.13.10 chlorosulfonated polyethylene or 4.13.11 cross-linked chlorinated polyethylene shall be applied over the insulation described in 3.14 or 3.15. The average thickness of the jacket shall be not less than that given in Table 7.11-1, and the minimum thickness shall be not less than 80 percent of this value.

The jackets described in the preceding paragraph are not necessarily suitable for use over silicone rubber insulation (see 3.17). The manufacturer should be consulted.*

*This paragraph is approved by NEMA as Authorized Engineering Information.

7.11.5 Length of Lay. Triplexed cables shall have a maximum length of lay of 35 times the diameter of the single-conductor cable.

7.11.6 Tests. The cable shall be tested in accordance with Part 6 and shall meet the requirements specified in 7.11, except as otherwise specified in 7.11.6.1 and 7.11.6.2.

7.11.6.1 *Electrical Requirements.* Each insulated and/or insulated and jacketed conductor in the completed cable shall be tested in accordance with 6.24 and 6.25 and shall meet the following requirements:

7.11.6.1.1 Alternating-current Voltage Test (See 6.24). The conductor shall withstand the alternating-current test voltage of 13 kV, except that the direct-current voltage test may be substituted.

7.11.6.1.2 Insulation Resistance (See 6.25). The conductor shall have an insulation resistance not less than that corresponding to the constant specified in 3.14, 3.15, or 3.17.

Table 7.11-1

Conductor Size, AWG or kcmil ▲	Insulation Thickness		Jacket Thickness	
	mils	mm	mils	mm
8–1	155	3.94	45	1.14
1/0–4/0	155	3.94	65	1.65
225–750	170	4.32	65	1.65
1000	170	4.32	95	2.41

▲ Editorially revised.

Copyright National Electrical Manufacturers Association
Provided by IHS under license with NEMA sed 9-15-1983.
No reproduction or networking permitted without license from IHS
Not for Resale

Part 8
APPENDICES

Part 8 is classified by NEMA as Authorized Engineering Information.

Appendix A ▲
ABBREVIATIONS AND SYMBOLS

a-c —alternating-current
AWG —American wire gauge
BWG —Birmingham wire gauge
C —Celsius (centigrade)
d-c —direct-current
F —Fahrenheit
g/m —grams per meter
Hz —hertz (electrical frequency in cycles per second)
kcmil —thousands of circular mils (formerly MCM)
kg —kilogram(s)
km —kilometer(s)
kN/m —kilonewton: per meter
kV —kilovolt(s)
MPa —megapascals
mm —millimeter(s)
psi —pounds per square inch
% —percent
± —plus or minus

Appendix B
REPRESENTATIVE TENSILE STRENGTH AND ELONGATION OF NONMAGNETIC METALS

Metal	Tensile Strength		Elongation 2-inch (50.8 mm) Length, Percent
	psi	MPa ▲	
Aluminum	13,000–45,000	90-310	15–45
Ambrac	50,000–70,000	345-482	20–40
Low Brass	40,000–50,000	276-345	40–50
Commercial Bronze	35,000–42,000	241-289	40
Copper	35,000–50,000	241-345	1–35
Monel	75,000	517	45
Stainless Steel	82,000–90,000	565-620	50
Zinc	20,000	138	60

Appendix C
DEFINITIONS FOR MAXIMUM TEMPERATURE OF CONDUCTORS IN INSULATED WIRE AND CABLE

C1.1 MAXIMUM CONDUCTOR TEMPERATURE—OPERATING

The highest conductor temperature attained by any part of the cable line under operating current load.

C1.2 MAXIMUM CONDUCTOR TEMPERATURE—EMERGENCY OVERLOAD

The highest conductor temperature attained by any part of the cable line during emergency overload of specified time, magnitude, and frequency of application.

C1.3 MAXIMUM CONDUCTOR TEMPERATURE—SHORT CIRCUIT

The highest conductor temperature attained by any part of the cable line during a short circuit of specified time and magnitude.

Appendix D ●

EMERGENCY OVERLOAD RATINGS FOR RUBBER-INSULATED CABLES

Voltage Rating, Volts	Maximum Temperature Rating of Insulation, Degrees C				
	60	70	75	80	85
	Maximum Emergency Overload Temperature, Degrees C				
0–2000	85	...	95	...	105
2001–5000	...	...	95	...	105
5001–8000	...	...	90	...	100
8001–15000	...	85	...	...	100
15001 and over	...	85	...	95	...

Operation at these emergency overload temperatures shall not exceed 100 hours in any twelve consecutive months nor more than 500 hours during the lifetime of the cable.

▲ Editorially revised.

● Appendix D formally Appendix E.

Copyright National Electrical Manufacturers Association
Provided by IHS under license with NEMA
No reproduction or networking permitted without license from IHS

Not for Resale

Appendix E ● ▲
REFERENCED ICEA PUBLICATIONS AND ASTM STANDARDS

Publication No. and Year	Title

E1.1 ICEA Publications

A-9-428 2nd Ed./NEMA WC 6-1975 (R 1980)	*Minimum Drum Diameters of Reels for Cables*[1]
P-46-426/IEEE Std 135 (SH007096)	*Power Cable Ampacities*[2]
T-24-380, rev. 12/80	*Guide for Partial-Discharge Test Procedure*[3]

E1.2 ASTM Standards[4]

A 90-81	*Weight of Coating on Zinc-Coated (Galvanized) Iron or Steel Articles, Tests for*
B 1-81	*Hard-Drawn Copper Wire, Specification for*
B 2-81	*Medium-Hard-Drawn Copper Wire, Specification for*
B 3-74 (1980)	*Soft or Annealed Copper Wire, Specification for*
B 5-80	*Tough-Pitch Electrolytic Copper Refinery Shapes, Specification for*
B 8-81	*Concentric-Lay-Stranded Copper Conductors, Hard, Medium-Hard, or Soft, Specification for*
B 29-79 (1984)	*Pig Lead, Specification for*
B 33-81	*Tinned Soft or Annealed Copper Wire for Electrical Purposes, Specification for*
B 172-71 (1980)	*Rope-Lay-Stranded Copper Conductors Having Bunch-Stranded Members, for Electrical Conductors, Specification for*
B 173-71 (1980)	*Rope-Lay-Stranded Copper Conductors Having Concentric-Stranded Members, for Electrical Conductors, Specification for*
B 174-71 (1980)	*Bunch-Stranded Copper Conductors for Electrical Conductors, Specification for*
B 189-81	*Lead-Coated and Lead-Alloy-Coated Soft Copper Wire for Electrical Purposes, Specification for*
B 193-78	*Resistivity of Electrical Conductor Materials, Test for*
B 229-81	*Concentric-Lay-Stranded Copper and Copper-Clad Steel Composite Conductors, Specification for*
B 230-82	*Aluminum-Alloy 1350-H19 Wire, for Electrical Purposes, Specification for*
B 231-81	*Concentric-Lay-Stranded Aluminum-Alloy 1350 Conductors, Specification for*
B 232-81	*Concentric-Lay-Stranded Aluminum Conductors, Coated Steel-Reinforced (ACSR), Specification for*
B 246-64 (1980)	*Tinned Hard-Drawn and Medium-Hard-Drawn Copper Wire for Electrical Purposes, Specification for*
B 263-58 (1981)	*Cross-Sectional Area of Stranded Conductors, Determination of*
B 397-81	*Concentric-Lay-Stranded Aluminum-Alloy 5005-H19 Conductors, Specification for*
B 399-81	*Concentric-Lay-Stranded Aluminum-Alloy 6201-T81 Conductors, Specification for*
B 400-81	*Compact-Round Concentric-Lay-Stranded Aluminum-Alloy 1350 Conductors, Specification for*
B 496-81	*Compact-Round Concentric-Lay-Stranded Copper Conductors, Specification for*
B 609-81	*Aluminum 1350 Round Wire, Annealed and Intermediate Tempers, for Electrical Purposes, Specification for*
D 5-73 (1978)	*Penetration of Bituminous Materials, Test for*
D 6-80	*Loss on Heating of Oil and Asphaltic Compounds, Test for*
D 257-78	*DC Resistance or Conductance of Insulating Materials, Tests for*
D 412-83	*Rubber Properties in Tension, Tests for*
D 471-79	*Rubber Property—Effect of Liquids, Test for*
D 746-79	*Brittleness Temperature of Plastics and Elastomers by Impact, Test for*
D 1693-70 (1980)	*Environmental Stress-Cracking of Ethylene Plastics, Test for*
D 3349-74 (1979)	*Absorption Coefficient of Carbon Black Pigmented Ethylene Plastic, Test for*
E 8-82	*Tension Testing of Metallic Materials, Method of*
E 28-67 (1977)	*Softening Point by Ring-and-Ball Apparatus, Test for*

[1]Copies may be obtained from NEMA Sales Office, National Electrical Manufacturers Association, 2101 L Street, N.W., Washington, DC 20037, USA.

[2]Copies may be obtained from IEEE Service Center, 445 Hoes Lane, Piscataway, NJ 08854, USA.

[3]Copies may be obtained from the Insulated Cable Engineers Association, Inc., P.O. Box P, South Yarmouth, MA 02664, USA.

[4]Copies may be obtained from the American Society for Testing and Materials, 1916 Race Street, Philadelphia, PA 19103, USA.

● Appendix E formerly Appendix D.

▲ Editorially revised.

Copyright National Electrical Manufacturers Association
Provided by IHS under license with NEMA
No reproduction or networking permitted without license from IHS
Not for Resale

Appendix G ●
SHIELDING

G1 DEFINITION OF SHIELDING

G1.1 Shielding of an electric power cable is the practice of confining the dielectric field of the cable to the insulation of the conductor or conductors. It is accomplished by means of a conductor stress control layer and an insulation shield. ▲

G2 FUNCTIONS OF SHIELDING

G2.1 A conductor stress control layer is employed to preclude excessive voltage stress on voids between conductor and insulation. To be effective, it must adhere to or remain in intimate contact with the insulation under all conditions. ▲

G2.2 An insulation shield has a number of functions:

1. To confine the dielectric field within the cable.
2. To obtain symmetrical radial distribution of voltage stress within the dielectric, thereby minimizing the possibility of surface discharges by precluding excessive tangential and longitudinal stresses.
3. To protect cable connected to overhead lines or otherwise subject to induced potentials.
4. To limit radio interference.
5. To reduce the hazard of shock. This advantage is obtained only if the shield is grounded. If not grounded, the hazard of shock may be increased.

G3 USE OF INSULATION SHIELDING

G3.1 The use of shielding involves consideration of installation and operating conditions. Definite rules cannot be established on a practical basis for all cases, but the following features should be considered as a working basis for the use of shielding.

G3.2 Where there is no metallic covering or shield over the insulation, the electric field will be partly in the insulation and partly in whatever lies between the insulation and ground. The external field, if sufficiently intense in air, will generate surface discharge and convert atmospheric oxygen into ozone which may be destructive to insulations and to protective jackets. If the surface of the cable is separated from ground by a thin layer of air and the air gap is subjected to a voltage stress which exceeds the dielectric strength of air, a discharge will occur, causing ozone formation.

G3.3 The ground may be either a metallic conduit, a damp nonmetallic conduit or a metallic binding tape or rings on an aerial cable, a loose metallic sheath, etc. Likewise, damage to nonshielded cable may result when the surface of the cable is moist, or covered with soot, soapy grease or other conducting film and the external field is partly confined by such conducting film so that the charging current is carried by the film to some spot where it can discharge to ground. The resultant intensity of discharge may be sufficient to cause burning of the insulation or jacket.

G3.4 Where nonshielded cables are used in underground ducts containing several circuits which must be worked on independently, the external field, if sufficiently intense, can cause shocks to those who handle or contact energized cable. In cases of this kind, it may be advisable to use shielded cable. Shielding used to reduce hazards of shock should have a resistance low enough to operate protective equipment in case of fault. In some cases, the efficiency of protective equipment may require proper size ground wires as a supplement to shielding. The same considerations apply to exposed installations where cables may be handled by personnel who may not be acquainted with the hazards involved.

G4 GROUNDING OF THE INSULATION SHIELD

G4.1 The insulation shield must be grounded at least at one end and preferably at two or more locations. It is recommended that the shield be grounded at cable terminations and at splices and taps. Stress cones should be made at all shield terminations.

G4.2 The shield should operate at or near ground potential at all times. Frequent grounding of shields reduces the possibility of open sections on nonmetallic covered cable. Multiple grounding of shields is desirable in order to improve the reliability and safety of the circuit. All grounding connections should be made to the shield in such a way as to provide a permanent low resistance bond. Shielding which does not have adequate ground connection due to discontinuity of the shield or to improper termination may be more dangerous than nonshielded nonmetallic cable and hazardous to life.

● Appendix G formerly Appendix K.
▲ Editorially revised.

Copyright National Electrical Manufacturers Association
Provided by IHS under license with NEMA
No reproduction or networking permitted without license from IHS

Not for Resale

G5 SHIELD MATERIALS

G5.1 Two distinct types of materials are employed in constructing cable shields.

G5.1.1 Nonmetallic shields may consist of a conducting tape or a layer of conducting compound. The tape may be conducting compound, fibrous tape faced or filled with conducting compound, or conducting fibrous tape.

G5.1.2 Metallic shields should be nonmagnetic and may consist of tape, braid, concentric serving of wires, or a sheath.

G6 SPLICES AND TERMINATIONS

G6.1 To prevent excessive leakage current and flashover, metallic and nonmetallic insulation shields, including any conducting residue on the insulation surface, must be removed completely at splices and terminations.

G6.2 An outer extruded insulation shield shall be removable without damaging or imparting conductivity to the underlying insulation. This may be accomplished by the aid of heat (air or flame) or by the use of a suitable solvent.

Appendix H ●
RECOMMENDED BENDING RADII FOR CABLES

H1.1 SCOPE

This appendix contains the minimum values for the radii to which insulated cables may be bent for permanent training during installation. These limits do not apply to conduit bends, sheaves or other curved surfaces around which the cable may be pulled under tension while being installed. Larger radii bends are required for such conditions. In all cases the minimum radii specified refers to the inner surface of the cable and not to the axis of the cable. ▲

H2.1 POWER CABLES WITHOUT METALLIC SHIELDING OR ARMOR

The minimum bending radii for both single- and multiple-conductor cable with or without lead sheath and without metallic shielding or armor are shown in Table H-1.

H3.1 POWER CABLES WITH METALLIC SHIELDING OR ARMOR

H3.1.1 Interlocked Armored Cables

The minimum bending radius for interlocked armored cables except tape shielded cables shall be in accordance with Table H-1 but not less than seven times the overall diameter of the cable. For tape shielded cable, see H3.1.3.1.

H3.1.2 Flat Tape and Wire Armored Cables

The minimum bending radius for all flat tape armored and all wire armored cables is twelve times the overall diameter of cable.

H3.1.3 Shielded Cables

H3.1.3.1 TAPE SHIELDED CABLES

The minimum bending radius for a single conductor cable is twelve times the overall diameter.

For multiconductor or multiplexed cables having individually taped shielded conductors, the minimum bending radius is twelve times the diameter of the individual conductors, or seven times the overall diameter, whichever is greater.

For multiconductor cable having an overall tape shield over the multiconductor assembly, the minimum bending radius is twelve times the overall diameter of the cable.

H3.1.3.2 WIRE SHIELDED CABLES

The minimum bending radii for all cables with wire shielding, except portable cables and armored cables, are given in H2.1. For portable cables, see H4.1. For armored cables, see H3.1.1 and H3.1.2.

H4.1 PORTABLE CABLES

The minimum bending radius for portable cables during installation and handling in service is six times the cable diameter for cables rated 5000 volts and less and eight times the cable diameter for cables rated over 5000 volts. For flat-twin cables, the minor diameter is used to determine the bending radius. ▲

H5.1 DRUM DIAMETERS OF REELS

See ICEA Pub. No. A-9-428 (Second Edition), NEMA Pub. No. WC 6-1975 (R 1980), which is quoted in Table H-2. ▲

● *Annendix H formerly Appendix M.*

Copyright National Electrical Manufacturers Association
Provided by IHS under license with NEMA
No reproduction or networking permitted without license from IHS
Not for Resale

Revised.
2639

Table H-1

Thickness of Conductor Insulation		Overall Diameter of Cable					
		inches	mm	inches	mm	inches	mm
		1.000 and less	25.4 and less	1.001 to 2.000	25.4 to 50.8	2.001 and over	50.8 and over
mils	mm	Minimum Binding Radius as a Multiple of Cable Diameter					
155 and less	3.94 and less	4		5		6	
170–310	4.32–7.87	5		6		7	
325 and over	8.26 and over	...		7		8	

Table H-2
Excerpt from ICEA/NEMA Standards Publication, *Drum Diameters of Reels for Wires and Cables*, ICEA Publication No. A-9-428 (Second Edition), NEMA Publication No. WC 6-1975 (R 1980)

Type of Cable	Minimum Drum Diameter as a Multiple of Outside Diameter† of Cable
A. Single- and multiple-conductor nonmetallic-covered cable	
1. Nonshielded and wire shielded, including cables with concentric wires	
a. 0–2000 Volts	10
b. Over 2000 Volts	
(1) Nonjacketed with concentric wires	14
(2) All others	12
2. Tape Shielded	14
B. Single- and multiple-conductor metallic-covered cable	
1. Tubular metallic sheathed	
a. Lead	14
b. Aluminum	
(1) Outside diameter–1.750" and less	25
(2) Outside diameter–1.751" and larger	30
2. Wire armored	16
3. Flat tape armored	16
4. Corrugated metallic sheathed	14
5. Interlocked armor	14
C. Multiple single conductors cabled together without common covering, including self-supporting cables–The circumscribing overall diameter shall be multiplied by the factor given in item A or B and then by the reduction factor of 0.75.	
D. Combinations–For combinations of the types described in items A, B and C, the highest factor for any component type shall be used.	
E. Single- and multiple-conductor cable in coilable nonmetallic duct	
Outside diameter of duct, inches–0.0 –0.50	26
0.51–1.00	24
1.01–1.25	22
1.26–1.50	21
Over 1.50	20

† Outside Diameter–

1. When metallic-sheathed cables are covered only by a thermosetting or thermoplastic jacket, the "outside diameter" is the diameter over the metallic sheath itself. In all other cases, the outside diameter is the diameter outside of all the material on the cable in the state in which it is to be wound upon the reel.
2. For "flat-twin" cables (where the cable is placed upon the reel with its flat side against the drum), the minor outside diameter shall be multiplied by the appropriate factor to determine the minimum drum diameter.
3. The multiplying factors given for item E refer to the outside diameter of the duct.

Copyright National Electrical Manufacturers Association
Provided by IHS under license with NEMA
No reproduction or networking permitted without license from IHS

Not for Resale

Appendix I ●

AMPACITIES FOR THREE-CONDUCTOR MINE POWER CABLES 2001 TO 15000 VOLTS COPPER AND ALUMINUM

Conductor Size AWG or kcmil ▲	Ampacities							
	Copper				Aluminum			
	2001-8000 Volts 75 °C	8001-15000 Volts 70 °C	2001-8000 Volts 85 °C	8001-15000 Volts 85 °C	2001-8000 Volts 75 °C	8001-15000 Volts 70 °C	2001-8000 Volts 85 °C	8001-15000 Volts 85 °C
6	79	...	89	...	...	...	...	...
4	104	...	116	...	81	...	91	...
2	136	130	152	156	106	102	119	122
1	157	149	175	179	122	117	137	140
1/0	181	171	202	206	141	134	157	160
2/0	208	196	232	235	162	153	181	184
3/0	239	225	267	270	187	176	209	211
4/0	274	258	306	310	215	202	240	242
250	303	285	339	342	238	223	266	268
300	338	317	378	380	...	...	...	...
350	372	348	416	418	293	274	327	329
400	400	374	448	449	317	295	353	354
450	428	390	480	480	340	316	379	379
500	457	425	512	511	366	337	406	405

Correction factors for ampacities at various ambient temperatures are as follows:

Ambient Temperature, Degrees C	Correction Factors		
	70 °C	75 °C	85 °C
10	1.41	1.36	1.29
20	1.29	1.25	1.20
30	1.15	1.13	1.10
40	1.00	1.00	1.00
50	0.82	0.85	0.88

● Appendix I formerly Appendix G.
▲ Editorially revised.

Copyright National Electrical Manufacturers Association
Provided by IHS under license with NEMA
No reproduction or networking permitted without license from IHS

Not for Resale

NEMA WC*3 80 ■ 6470247 0019349 6 ■

Appendix J ●
AMPACITIES AND VOLTAGE RATINGS OF PORTABLE CABLES

J1.1 AMPACITIES (CURRENT-CARRYING CAPACITY IN AMPERES)

The recommended ampacities for the various sizes and types of portable cables listed in J1.2 are given in Table J-1. These values are based on an ambient temperature of 40°C (104°F). Correction factors for ampacities at various ambient temperatures are as follows:

Ambient Temperature, Degrees C	Correction Factors
10	1.26
20	1.18
30	1.10
40	1.00
50	0.90

When the cables are used with one or more layers wound on a reel, the ampacities shall be corrected as follows:

Number of Layers	Multiplying Correction Factors
1	0·85
2	0·65
3	0·45
4	0·35

J1.2 VOLTAGE RATINGS

Since portable cables are used extensively on dredges, shovels and in mines where service conditions are severe and where failure of the cable may result in loss of life and extensive damage to property, it is recommended that the various type of cables be limited to the following maximum circuit voltage:

2000 Volts
- Single-conductor nonshielded
- Type W and G, two conductor
- Type W, three, four, five and six conductor
- Type G —four and five conductor
- Type G-GC —three conductor
- Type PG —two and three conductor
- Type PCG —two and three conductor
- Type SHC-GC—three conductor

5000 Volts
- Type G* three conductor

25000 Volts
- Type SH single conductor
- Types SHD and SHD-GC

• Shielded cables provide a higher level of safety at ratings over 2000 volts.

Table J-1
Ampacities for Portable Cables at an Ambient Temperature of 40°C, Amperes per Conductor†

Size, AWG or kcmil	Single Conductor		Two Conductor	Three Conductor		Four Conductor	Five Conductor	Six Conductor
	Up to 5 kV▲	Above 5 kV	Round and Flat	Up to 5 kV▲	Above 5 kV			
8	60	70	50	50	55	45	40	35
6	85	95	65	65	70	55	50	45
4	110	120	90	85	95	75	65	60
3	130	140	105	100	105	85	75	70
2	150	165	120	115	125	100	90	80
1	170	190	140	130	140	110	100	90
1/0	200	215	170	145	165	130	115	105
2/0	235	245	195	170	190	150	135	120
3/0	275	285	225	195	215	170	150	135
4/0	315	330	260	220	245	190	170	155
250	350	360	285	245	...	210	...	...
300	395	405	310	275	...	235	...	...
350	445	445	335	305	...	260	...	...
400	480	485	360	325	...	280	...	...
450	515	520	385	345	...	300	...	...
500	545	555	415	375	...	325	...	...
550	580	...	...	...	...	...	...	...
600	610	...	...	...	...	...	...	...
650	640	...	...	...	...	...	...	...
700	665	...	...	...	...	...	...	...
750	690	...	...	...	...	...	...	...
800	715	...	...	...	...	...	...	...
900	765	...	...	...	...	...	...	...
1000	825	...	...	...	...	...	...	...

† These ampacities are based on the insulation described in Part 3, Paragraphs 3.10, 3.11, 3.12, 3.13, 3.14 (up through 8000 volts only), 3.15 and 3.16.

● Appendix J formerly Appendix H. Old Appendix J deleted in accordance with rescission of 7.9.
▲ Editorially revised.

Copyright National Electrical Manufacturers Association
Provided by IHS under license with NEMA
No reproduction or networking permitted without license from IHS
Not for Resale

Appendix K
Conductor Identification for Control Cables

K1 SCOPE

This appendix contains recommendations for conductor identification of conductors in control cables if such identification is used.

K2 NATIONAL ELECTRICAL CODE APPLICATIONS

The *National Electrical Code* specifies that conductors colored white be used only as grounded conductors and that conductors colored green or green/yellow be used only as grounding conductors and that neither white nor green be used in any manner on ungrounded conductors. Tables K-2 and K-4 provide color sequences which do not include white or green conductors. If grounded and/or grounding conductors are used in the cable, they shall be colored white or green, respectively, and inserted as the second and/or third designated conductor in the first sequence of circuit identification only. Where these conductors are required, they should be specified.

K3 METHODS OF CONDUCTOR IDENTIFICATION

K3.1 Method 1– Colored Compounds with Tracers

This method uses base colors with tracers in accordance with Table K-1 or K-2. These color combinations should be repeated in regular sequence as necessary.

Base and tracer colors should be recognizably the color combinations given in the tables and should approximately match the color shades given in Table K-6.

Base colors may be obtained by suitable color coatings applied to the insulation or jacket surface or by colored insulation or jacket compound.

Tracers should be colored stripes or bands marked on the surface of the insulation or jacket in such a manner as to afford distinctive coding throughout the length. Tracers may be continuous or broken lines, such as a series of dots or dashes, and should be applied longitudinally, annularly, spirally, or in other distinctive patterns.

K3.2 Method 2–Neutral Colored Compounds with Tracers

This method uses a neutral background or base color, such as tan, on all conductors, with tracers as defined in Method 1 and in accordance with Table K-3 or K-4. These color combinations should be repeated in regular sequence as necessary.

K3.3 Method 3–Neutral or Single-Color Compounds with Surface Printing of Numbers and Color Designations

This method uses a single-color insulation or covering on all conductors with printed conductor numbers and color designations in accordance with Table K-1 or K-2. These color combinations should be repeated in regular sequence as necessary.

For example, using Table K-2, for conductors 1 to 3, inclusive:

1–Black	1–Black	1–Black, etc.
2–Red	2–Red	2–Red, etc.
3–Blue	3–Blue	3–Blue, etc.

K3.4 Method 4–Neutral or Single-Color Compounds with Surface Printing of Numbers

This method uses a single color insulation or covering on all conductors with each conductor numbered in sequence by surface printing, beginning with the number 1.

K3.5 Method 5–Individual Color Coding With Braids

This method uses colored braids over the insulated conductors in accordance with Table K-2 or K-5. The shades of the colors should approximate those identified by the numbers given in Table K-6.

The tracers should consist of three carriers with each carrier composed of a minimum of two ends. Where two tracers are used, they should be crossed.

K3.6 Method 6–Layer Identification

This method uses a distinctively identified conductor in each layer.

Copyright National Electrical Manufacturers Association
Provided by IHS under license with NEMA
No reproduction or networking permitted without license from IHS
Not for Resale

K3.7 Method 7—Paired Conductors

One conductor of each pair should be coded "white" or "black" and the other conductors should be coded in accordance with the sequence given in Table K-2 or K-5, omitting white or black, respectively. This color sequence should be repeated as necessary.

Table K-1
COLOR SEQUENCE

Conductor Number	Background or Base Color	Tracer Color	Conductor Number	Background or Base Color	Tracer Color
1	Black	...	11	Blue	Black
2	White	...	12	Black	White
3	Red	...	13	Red	White
4	Green	...	14	Green	White
5	Orange	...	15	Blue	White
6	Blue	...	16	Black	Red
7	White	Black	17	White	Red
8	Red	Black	18	Orange	Red
9	Green	Black	19	Blue	Red
10	Orange	Black	20	Red	Green
			21	Orange	Green

Table K-2
COLOR SEQUENCE

Conductor Number	Background or Base Color	Tracer Color	Conductor Number	Background or Base Color	Tracer Color
1	Black	...	19	Orange	Blue
2	Red	...	20	Yellow	Blue
3	Blue	...	21	Brown	Blue
4	Orange	...	22	Black	Orange
5	Yellow	...	23	Red	Orange
6	Brown	...	24	Blue	Orange
7	Red	Black	25	Yellow	Orange
8	Blue	Black	26	Brown	Orange
9	Orange	Black	27	Black	Yellow
10	Yellow	Black	28	Red	Yellow
11	Brown	Black	29	Blue	Yellow
12	Black	Red	30	Orange	Yellow
13	Blue	Red	31	Brown	Yellow
14	Orange	Red	32	Black	Brown
15	Yellow	Red	33	Red	Brown
16	Brown	Red	34	Blue	Brown
17	Black	Blue	35	Orange	Brown
18	Red	Blue	36	Yellow	Brown

NOTE—See K.2 for *National Electrical Code* applications.

Copyright National Electrical Manufacturers Association
Provided by IHS under license with NEMA
No reproduction or networking permitted without license from IHS

Not for Resale

Table K-3
COLOR SEQUENCE

Conductor Number	First Tracer Color (e.g., Wide Tracer)	Second Tracer Color (e.g., Narrow Tracer)	Conductor Number	First Tracer Color (e.g., Wide Tracer)	Second Tracer Color (e.g., Narrow Tracer)
1	Black	...	11	Blue	Black
2	White	...	12	Black	White
3	Red	...	13	Red	White
4	Green	...	14	Green	White
5	Orange	...	15	Blue	White
6	Blue	...	16	Black	Red
7	White	Black	17	White	Red
8	Red	Black	18	Orange	Red
9	Green	Black	19	Blue	Red
10	Orange	Black	20	Red	Green
			21	Orange	Green

Table K-4
COLOR SEQUENCE

Conductor Number	First Tracer Color (e.g., Wide Tracer	Second Tracer Color (e.g., Narrow Tracer	Conductor Number	First Tracer Color (e.g., Wide Tracer	Second Tracer Color (e.g., Narrow Tracer
1	Black	...	19	Orange	Blue
2	Red	...	20	Yellow	Blue
3	Blue	...	21	Brown	Blue
4	Orange	...	22	Black	Orange
5	Yellow	...	23	Red	Orange
6	Brown	...	24	Blue	Orange
7	Red	Black	25	Yellow	Orange
8	Blue	Black	26	Brown	Orange
9	Orange	Black	27	Black	Yellow
10	Yellow	Black	28	Red	Yellow
11	Brown	Black	29	Blue	Yellow
12	Black	Red	30	Orange	Yellow
13	Blue	Red	31	Brown	Yellow
14	Orange	Red	32	Black	Brown
15	Yellow	Red	33	Red	Brown
16	Brown	Red	34	Blue	Brown
17	Black	Blue	35	Orange	Brown
18	Red	Blue	36	Yellow	Brown

NOTE—See K.2 for *National Electrical Code* applications.

Copyright National Electrical Manufacturers Association
Provided by IHS under license with NEMA
No reproduction or networking permitted without license from IHS

Not for Resale

Table K-5
Color Sequence

Conductor Number	Background or Base Color	First Tracer Color	Second Tracer Color	Conductor Number	Background or Base Color	First Tracer Color	Second Tracer Color
1	Black	. . .	. . .	20	Red	Green	. . .
2	White	. . .	. . .	21	Orange	Green	. . .
3	Red	. . .	. . .	22	Black	White	Red
4	Green	. . .	. . .	23	White	Black	Red
5	Orange	. . .	. . .	24	Red	Black	White
6	Blue	. . .	. . .	25	Green	Black	White
7	White	Black	. . .	26	Orange	Black	White
8	Red	Black	. . .	27	Blue	Black	White
9	Green	Black	. . .	28	Black	Red	Green
10	Orange	Black	. . .	29	White	Red	Green
11	Blue	Black	. . .	30	Red	Black	Green
12	Black	White	. . .	31	Green	Black	Orange
13	Red	White	. . .	32	Orange	Black	Green
14	Green	White	. . .	33	Blue	White	Orange
15	Blue	White	. . .	34	Black	White	Orange
16	Black	Red	. . .	35	White	Red	Orange
17	White	Red	. . .	36	Orange	White	Blue
18	Orange	Red	. . .	37	White	Red	Blue
19	Blue	Red	. . .				

Table K-6
Shades of Color

Color	Munsell Notation*
Black	N2/
White	N9/
Red	2.5 R 4/12
Blue	2.5 PB 4/10
Green	2.5 G 5/12
Orange	2.5 YR 6/14
Yellow	5 Y 8.5/12
Brown	2.5 YR 3.5/6

*Munsell Color System is published by Munsell Color–Macbeth Division, 2441 North Calvert St, Baltimore, MD 21218.

Copyright National Electrical Manufacturers Association
Provided by IHS under license with NEMA
No reproduction or networking permitted without license from IHS
Not for Resale

Appendix L ▲
ADDITIONAL CONDUCTOR INFORMATION

Table L-1
Solid Aluminum and Copper Conductors

Conductor Size, AWG or kcmil	Approximate Weight			
	Aluminum		Copper	
	Pounds per 1000 Feet	g/m	Pounds per 1000 Feet	g/m
22	...	...	1.94	2.88
20	...	...	3.10	4.61
19	...	...	3.90	5.81
18	...	...	4.92	7.32
17	...	...	6.21	9.24
16	...	...	7.81	11.6
15	...	...	9.87	14.7
14	...	...	12.4	18.5
13	...	...	15.7	23.4
12	6.01	8.94	19.8	29.4
11	7.57	11.3	24.9	37.1
10	9.56	14.22	31.43	46.77
9	12.04	17.92	39.62	58.95
8	15.20	22.62	49.98	74.38
7	19.16	28.52	63.03	93.80
6	24.15	35.94	79.44	118.2
5	30.45	45.32	100.2	149.0
4	38.41	57.17	126.3	188.0
3	48.43	72.08	159.3	237.1
2	61.07	90.89	200.9	298.9
1	77.03	114.6	253.3	377.0
1/0	97.15	144.6	319.5	475.5
2/0	122.5	182.3	402.8	599.5
3/0	154.4	229.8	507.8	755.8
4/0	194.7	289.8	640.5	953.2
250	230.1	342.4	...	...
300	276.1	410.9	...	...
350	322.1	479.4	...	...
400	368.2	547.9	...	...
450	414.4	616.3	...	...
500	460.2	648.8	...	...

Authorized Engineering Information 7-14-1982.

▲ Editorially revised.

Copyright National Electrical Manufacturers Association
Provided by IHS under license with NEMA
No reproduction or networking permitted without license from IHS

Not for Resale

Table L-2

Concentric Stranded Class B Aluminum and Copper Conductors

Conductor Size, AWG or kcmil	Number of Strands	Approximate Diameter of Each Strand		Approximate Outside Diameter		Approximate Weight			
						Aluminum		Copper	
		mils	mm	inches	mm	Pounds per 1000 Feet	g/m	Pounds per 1000 Feet	g/m
22	7	9.6	0.244	0.029	0.737	...	...	1.975	2.941
20	7	12.1	0.307	0.036	0.914	...	...	3.154	4.705
19	7	13.6	0.345	0.041	1.04	...	...	3.974	5.922
18	7	15.2	0.386	0.046	1.17	...	...	5.015	7.462
17	7	17.2	0.437	0.052	1.32	...	...	6.324	9.429
16	7	19.2	0.488	0.058	1.47	...	...	7.974	11.86
15	7	21.6	0.549	...	...	...	...	9.959	14.98
14	7	24.2	0.615	...	...	...	...	12.68	18.88
13	7	27.2	0.691	...	...	...	...	16.01	23.82
12	7	30.5	0.775	...	...	6.13	9.12	20.16	30.00
11	7	34.3	0.871	...	...	7.72	11.5	25.49	37.80
10	7	38.5	0.978	...	...	9.75	14.5	32.06	47.71
9	7	43.2	1.10	...	...	12.3	18.3	40.42	60.14
8	7	48.6	1.23	...	...	15.5	23.1	51.0	75.9
7	7	54.5	1.39	...	...	19.5	29.1	64.2	95.7
6	7	61.2	1.56	...	...	24.6	36.7	80.9	121
5	7	68.8	1.75	...	...	31.1	46.2	102	152
4	7	77.2	1.96	...	...	39.2	58.3	129	192
3	7	86.7	2.20	...	...	49.4	73.5	162	242
2	7	97.4	2.47	...	...	62.3	92.7	205	305
1	19	66.4	1.69	...	...	78.6	117	259	385
1/0	19	74.5	1.89	...	...	99.1	147	326	485
2/0	19	83.7	2.13	...	...	125	186	411	611
3/0	19	94.0	2.39	...	...	157	234	518	771
4/0	19	105.5	2.68	...	...	199	296	653	972
250	37	82.2	2.09	...	...	235	349	772	1150
300	37	90.0	2.29	...	...	282	419	925	1380
350	37	97.3	2.47	...	...	329	489	1080	1610
400	37	104.0	2.64	...	...	376	559	1236	1840
450	37	110.3	2.80	...	...	422	629	1390	2070
500	37	116.2	2.95	...	...	469	699	1542	2300
550	61	95.0	2.41	...	...	517	768	1700	2530
600	61	99.2	2.52	...	...	563	838	1850	2760
650	61	103.2	2.62	...	...	610	908	2006	2990
700	61	107.1	2.72	...	...	657	978	2160	3220
750	61	110.9	2.82	...	...	704	1050	2316	3450
800	61	114.5	2.91	...	...	751	1120	2469	3680
900	61	121.5	3.09	...	...	845	1260	2780	4140
1000	61	128.0	3.25	...	...	939	1400	3086	4590
1100	91	109.9	2.79	...	...	1032	1540	3394	5050
1200	91	114.8	2.92	...	...	1126	1680	3703	5510
1250	91	117.2	2.98	...	...	1173	1750	3859	5740
1300	91	119.5	3.04	...	...	1220	1820	4012	5970
1400	91	124.0	3.15	...	...	1313	1960	4320	6430
1500	91	128.4	3.26	...	...	1408	2100	4632	6890
1600	127	112.2	2.85	...	...	1501	2240	4936	7350
1700	127	115.7	2.94	...	...	1596	2370	5249	7810
1750	127	117.4	2.98	...	...	1643	2440	5403	8040
1800	127	119.1	3.02	...	...	1691	2510	5562	8270
1900	127	122.3	3.11	...	...	1783	2650	5865	8730
2000	127	125.5	3.19	...	...	1877	2790	6176	9190

NEMA Authorized Engineering Information 7-14-1982.

Copyright National Electrical Manufacturers Association
Provided by IHS under license with NEMA
No reproduction or networking permitted without license from IHS

Not for Resale

Table L-3

Concentric Stranded Class C and D Aluminum and Copper Conductors

Conductor Size, AWG or kcmil	Class C			Class D		
	Number of Strands	Approximate Diameter of Each Strand		Number of Strands	Approximate Diameter of Each Strand	
		mils	mm		mils	mm
22	...	...	...	...	...	...
20	...	...	...	...	...	...
19	...	...	...	...	...	...
18	...	...	...	...	...	...
17	...	...	...	...	...	...
16	...	...	...	...	...	...
15	...	...	...	...	...	...
14	19	14.7	0.373	37	10.5	0.267
13	19	16.5	0.419	37	11.8	0.300
12	19	18.5	0.470	37	13.3	0.338
11	19	20.8	0.528	37	14.9	0.378
10	19	23.4	0.594	37	16.7	0.424
9	19	26.2	0.665	37	18.8	0.478
8	19	29.5	0.749	37	21.1	0.536
7	19	33.1	0.841	37	23.7	0.602
6	19	37.2	0.945	37	26.6	0.676
5	19	41.7	1.06	37	29.9	0.759
4	19	46.9	1.19	37	33.6	0.853
3	19	52.6	1.34	37	37.7	0.958
2	19	59.1	1.50	37	42.4	1.08
1	37	47.6	1.21	61	37.0	0.940
1/0	37	53.4	1.36	61	41.6	1.06
2/0	37	60.0	1.52	61	46.7	1.19
3/0	37	67.3	1.71	61	52.4	1.33
4/0	37	75.6	1.92	61	58.9	1.50
250	61	64.0	1.63	91	52.4	1.33
300	61	70.1	1.78	91	57.4	1.46
350	61	75.7	1.92	91	62.0	1.57
400	61	81.0	2.06	91	66.3	1.68
450	61	85.9	2.18	91	70.3	1.79
500	61	90.5	2.30	91	74.1	1.88
550	91	77.7	1.97	127	65.8	1.67
600	91	81.2	2.06	127	68.7	1.74
650	91	84.5	2.15	127	71.5	1.82
700	91	87.7	2.23	127	74.2	1.88
750	91	90.8	2.31	127	76.8	1.95
800	91	93.8	2.38	127	79.4	2.02
900	91	99.4	2.53	127	84.2	2.14
1000	91	104.8	2.66	127	88.7	2.25
1100	127	93.1	2.36	169	80.7	2.05
1200	127	97.2	2.47	169	84.3	2.14
1250	127	99.2	2.52	169	86.0	2.18
1300	127	101.2	2.57	169	87.7	2.23
1400	127	105.0	2.67	169	91.0	2.31
1500	127	108.7	2.76	169	94.2	2.39
1600	169	97.3	2.47	217	85.9	2.18
1700	169	100.3	2.55	217	88.5	2.25
1750	169	101.8	2.59	217	89.8	2.28
1800	169	103.2	2.62	217	91.1	2.31
1900	169	106.0	2.69	217	93.6	2.38
2000	169	108.8	2.76	217	96.0	2.44

NOTE: The weights of Class C and Class D conductors are the same as for the equivalent Class B conductor (see Table L-2).

NEMA Authorized Engineering Information 7-14-1982.

Copyright National Electrical Manufacturers Association
Provided by IHS under license with NEMA
No reproduction or networking permitted without license from IHS

Not for Resale

Table L-4

Rope-lay Aluminum and Copper Conductors, Class G

Conductor Size, AWG or kcmil	Number of Strands	Suggested Construction	Approximate Diameter of Each Strand		Approximate Outside Diameter		Approximate Weight			
							Aluminum		Copper	
			mils	mm	inches	mm	Pounds per 1000 Feet	g/m	Pounds per 1000 Feet	g/m
14	49	7×7	9.2	0.23	0.083	2.11	...	...	12.8	19.1
12	49	7×7	11.6	0.29	0.104	2.64	...	...	20.3	30.3
10	49	7×7	14.6	0.37	0.131	3.33	...	...	32.3	48.2
9	49	7×7	16.4	0.42	0.148	3.76	...	...	40.8	60.7
8	49	7×7	18.4	0.47	0.166	4.22	...	...	51	76.6
7	49	7×7	20.6	0.52	0.185	4.70	20	29.4	65	96.6
6	49	7×7	23.1	0.59	0.208	5.28	25	37.0	82	122
5	49	7×7	26.0	0.66	0.234	5.94	31	46.7	103	154
4	49	7×7	29.2	0.74	0.263	6.68	40	58.9	130	194
3	49	7×7	32.8	0.83	0.295	7.49	50	74.2	164	244
2	49	7×7	36.8	0.93	0.331	8.41	63	93.6	207	308
1	133	19×7	25.1	0.64	0.377	9.58	80	119	264	392
1/0	133	19×7	28.2	0.72	0.423	10.7	102	150	334	495
2/0	133	19×7	31.6	0.80	0.474	12.0	127	190	419	623
3/0	133	19×7	35.5	0.90	0.533	13.5	161	239	529	786
4/0	133	19×7	39.9	1.01	0.599	15.2	203	301	668	991
250	259	37×7	31.1	0.79	0.653	16.6	242	358	795	1175
300	259	37×7	34.0	0.86	0.714	18.1	287	429	945	1410
350	259	37×7	36.8	0.93	0.773	19.6	337	501	1110	1650
400	259	37×7	39.3	1.00	0.825	21.0	385	573	1265	1885
450	259	37×7	41.7	1.06	0.876	22.3	433	644	1425	2120
500	259	37×7	43.9	1.12	0.922	23.4	482	716	1585	2355
550	427	61×7	35.9	0.91	0.969	24.6	532	791	1750	2600
600	427	61×7	37.5	0.95	1.013	25.7	581	863	1910	2840
650	427	61×7	39.0	0.99	1.053	26.7	629	935	2070	3075
700	427	61×7	40.5	1.03	1.094	27.8	678	1005	2230	3310
750	427	61×7	41.9	1.06	1.131	28.7	725	1080	2385	3545
800	427	61×7	43.3	1.10	1.169	29.7	774	1150	2545	3785
900	427	61×7	45.9	1.17	1.239	31.5	869	1295	2860	4255
1000	427	61×7	48.4	1.23	1.307	33.2	967	1440	3180	4730
1100	427	61×7	50.8	1.29	1.372	34.8	1064	1580	3500	5205
1200	427	61×7	53.0	1.35	1.431	36.3	1158	1725	3810	5675
1250	427	61×7	54.1	1.37	1.461	37.1	1208	1800	3975	5910
1300	427	61×7	55.2	1.40	1.490	37.8	1257	1870	4135	6150
1400	427	61×7	57.3	1.46	1.547	39.3	1356	2015	4460	6620
1500	427	61×7	59.3	1.51	1.601	40.7	1452	2155	4775	7095
1600	703	37×19	47.7	1.21	1.670	42.4	1560	2325	5130	7640
1700	703	37×19	49.2	1.25	1.722	43.7	1660	2470	5460	8115
1750	703	37×19	49.9	1.27	1.747	44.4	1709	2540	5620	8355
1800	703	37×19	50.6	1.29	1.771	45.0	1756	2615	5775	8595
1900	703	37×19	52.0	1.32	1.820	46.2	1854	2760	6100	9070
2000	703	37×19	53.3	1.35	1.866	47.4	1950	2905	6415	9550

NOTE: Rope-lay aluminum Class G conductors are not recommended in sizes 8 AWG and smaller and individual aluminum wires in stranded conductors should not be smaller than 24 AWG.

NEMA Authorized Engineering Information 7-14-1982.

Copyright National Electrical Manufacturers Association
Provided by IHS under license with NEMA
No reproduction or networking permitted without license from IHS

 Not for Resale

Table L-5

Rope-lay Aluminum and Copper Conductors, Class H

Conductor Size, AWG or kcmil	Number of Strands	Suggested Construction	Approximate Diameter of Each Strand		Approximate Outside Diameter		Approximate Weight			
							Aluminum		Copper	
			mils	mm	inches	mm	Pounds per 1000 Feet	g/m	Pounds per 1000 Feet	g/m
8	133	19×7	11.1	0.28	0.167	4.24	...	...	52	77.4
7	133	19×7	12.5	0.32	0.188	4.78	...	...	65	97.5
6	133	19×7	14.0	0.36	0.210	5.33	...	...	82	123
5	133	19×7	15.8	0.40	0.237	6.02	...	...	105	155
4	133	19×7	17.7	0.45	0.266	6.76	...	...	132	196
3	133	19×7	19.9	0.51	0.299	7.59	...	...	167	247
2	133	19×7	22.3	0.57	0.335	8.51	63	94.5	208	311
2	259	37×7	16.0	0.41	0.336	8.53	...	...	210	312
1	259	37×7	18.0	0.46	0.378	9.60	...	...	266	394
1/0	259	37×7	20.2	0.51	0.424	10.8	102	151	334	497
2/0	259	37×7	22.7	0.58	0.477	12.1	128	190	422	626
3/0	259	37×7	25.5	0.65	0.536	13.6	162	240	533	790
3/0	427	61×7	19.8	0.50	0.535	13.6	...	...	532	794
4/0	259	37×7	28.6	0.73	0.601	15.3	204	303	670	996
4/0	427	61×7	22.3	0.57	0.602	15.3	205	304	675	1000
250	427	61×7	24.2	0.61	0.653	16.6	242	360	795	1180
300	427	61×7	26.5	0.67	0.716	18.2	290	431	953	1420
350	427	61×7	28.6	0.73	0.772	19.6	337	503	1110	1655
400	427	61×7	30.6	0.78	0.826	21.0	386	575	1270	1890
450	427	61×7	32.5	0.83	0.878	22.3	436	647	1435	2130
500	427	61×7	34.2	0.87	0.923	23.4	483	719	1590	2365
550	703	37×19	28.0	0.71	0.980	24.9	538	798	1770	2625
600	703	37×19	29.2	0.74	1.022	26.0	584	871	1920	2865
650	703	37×19	30.4	0.77	1.064	27.0	634	944	2085	3105
700	703	37×19	31.6	0.80	1.106	28.1	686	1015	2255	3340
750	703	37×19	32.7	0.83	1.145	29.1	733	1090	2410	3580
800	703	37×19	33.7	0.86	1.180	30.0	778	1160	2560	3820
900	703	37×19	35.8	0.91	1.253	31.8	880	1305	2895	4295
1000	703	37×19	37.7	0.96	1.320	33.5	974	1450	3205	4775
1100	703	37×19	39.6	1.01	1.386	35.2	1075	1595	3535	5250
1200	703	37×19	41.3	1.05	1.446	36.7	1169	1740	3845	5730
1250	703	37×19	42.2	1.07	1.477	37.5	1221	1815	4015	5970
1300	703	37×19	43.0	1.09	1.505	38.2	1268	1885	4170	6205
1400	703	37×19	44.6	1.13	1.561	39.6	1363	2035	4485	6685
1500	703	37×19	46.2	1.17	1.617	41.1	1464	2180	4815	7160
1600	1159	61×19	37.2	0.94	1.674	42.5	1564	2325	5145	7640
1700	1159	61×19	38.3	0.97	1.724	43.8	1658	2470	5455	8115
1750	1159	61×19	38.9	0.99	1.751	44.5	1710	2540	5625	8355
1800	1159	61×19	39.4	1.00	1.773	45.0	1754	2615	5770	8595
1900	1159	61×19	40.5	1.03	1.823	46.3	1854	2760	6100	9070
2000	1159	61×19	41.5	1.05	1.868	47.4	1946	2905	6400	9550

NOTE: Individual aluminum wires in stranded conductors should not be smaller than 24 AWG.

NEMA Authorized Engineering Information 7-14-1982.

Copyright National Electrical Manufacturers Association
Provided by IHS under license with NEMA
No reproduction or networking permitted without license from IHS

Not for Resale

Table L-6

Aluminum and Copper Conductors, Class I
Each Individual Strand 24 AWG, 0.0201 Inch (0.511 mm)

Conductor Size, AWG or kcmil	Suggested Construction	Approximate Number of Strands	Approximate Outside Diameter		Approximate Weight			
					Aluminum		Copper	
			inches	mm	Pounds per 1000 Feet	g/m	Pounds per 1000 Feet	g/m
10	1×26	26	0.125	3.18	...	...	32.5	48.3
9	1×33	33	0.138	3.51	...	...	41	61.3
8	1×41	41	0.156	3.96	16	23.1	51	76.1
7	1×52	52	0.185	4.70	20	29.3	65	96.5
6	7×9	63	0.207	5.26	24	36.3	80	119
5	7×12	84	0.235	5.97	32	48.3	105	159
4	7×15	105	0.263	6.68	41	60.4	134	199
3	7×19	133	0.291	7.39	51	76.5	169	252
2	7×23	161	0.319	8.10	62	92.7	205	305
1	7×30	210	0.367	9.32	81	121	267	397
1/0	19×14	266	0.441	11.2	104	155	342	508
2/0	19×18	342	0.500	12.7	133	199	439	654
3/0	19×22	418	0.549	13.9	163	243	537	799
4/0	19×28	532	0.613	15.6	208	309	683	1015
250	7×7×13	637	0.682	17.3	251	374	825	1230
300	7×7×15	735	0.737	18.7	290	431	955	1420
350	7×7×18	882	0.800	20.3	348	517	1145	1700
400	7×7×20	980	0.831	21.1	386	575	1270	1890
450	7×7×23	1127	0.894	22.7	444	661	1460	2175
500	7×7×25	1225	0.941	23.9	483	719	1590	2365
550	7×7×28	1372	0.980	24.9	541	805	1780	2645
600	7×7×30	1470	1.027	26.1	579	862	1905	2835
650	19×7×12	1596	1.152	29.3	635	945	2090	3110
700	19×7×13	1729	1.194	30.3	687	1025	2260	3365
750	19×7×14	1862	1.235	31.4	740	1100	2435	3625
800	19×7×15	1995	1.290	32.8	793	1180	2610	3885
900	19×7×17	2261	1.372	34.8	901	1340	2965	4405
1000	19×7×19	2527	1.427	36.2	1005	1495	3305	4920
1100	19×7×21	2793	1.495	38.0	1111	1655	3655	5440
1200	19×7×22	2926	1.537	39.0	1164	1730	3830	5700
1250	19×7×23	3059	1.564	39.7	1216	1810	4000	5955
1300	19×7×24	3192	1.605	40.8	1269	1890	4175	6215
1400	19×7×26	3458	1.674	42.5	1386	2045	4560	6735
1500	19×7×28	3724	1.715	43.6	1482	2205	4875	7250
1600	19×7×30	3990	1.797	45.6	1587	2360	5220	7770
1700	19×7×32	4256	1.852	47.0	1693	2520	5570	8290
1750	19×7×33	4389	1.880	47.8	1746	2600	5745	8545
1800	19×7×34	4522	1.921	48.8	1800	2675	5920	8805
1900	19×7×36	4788	1.976	50.2	1905	2835	6265	9325
2000	19×7×37	4921	2.003	50.9	1958	2915	6440	9585

NOTE: Aluminum Class I conductors are not recommended in sizes 8 AWG and smaller.

NEMA Authorized Engineering Information 7-14-1982.

Copyright National Electrical Manufacturers Association
Provided by IHS under license with NEMA
No reproduction or networking permitted without license from IHS

Not for Resale

Table L-7

Copper Conductors, Class K
Each Individual Strand 30 AWG, 0.0100 Inch (0.254 mm)

Conductor Size, AWG or kcmil	Suggested Construction	Approximate Number of Strands	Approximate Outside Diameter		Approximate Weight	
			Inches	mm	Pounds per 1000 Feet	g/m
20	1×10	10	0.038	0.97	3.2	4.59
18	1×16	16	0.048	1.22	5.0	7.35
16	1×26	26	0.060	1.52	8.0	11.9
14	1×41	41	0.078	1.98	12.8	18.8
12	1×65	65	0.101	2.57	20.3	29.9
10	1×104	104	0.126	3.20	32.5	47.8
9	7×19	133	0.150	3.81	42	62.3
8	7×24	168	0.157	3.99	53	78.7
7	7×30	210	0.179	4.55	66	98.4
6	7×38	266	0.210	5.33	84	125
5	7×48	336	0.235	5.97	106	157
4	7×60	420	0.272	6.91	132	197
3	19×28	532	0.304	7.72	169	252
2	19×35	665	0.338	8.59	211	315
1	19×44	836	0.397	10.1	266	395
1/0	19×56	1064	0.451	11.5	338	503
2/0	7×7×27	1323	0.470	11.9	425	632
3/0	7×7×34	1666	0.533	13.5	535	795
4/0	7×7×43	2107	0.627	15.9	676	1005
250	7×7×51	2499	0.682	17.3	802	1195
300	7×7×61	2989	0.768	19.5	960	1425
350	19×7×26	3458	0.809	20.5	1120	1665
400	19×7×30	3990	0.878	22.3	1290	1925
450	19×7×34	4522	0.933	23.7	1465	2180
500	19×7×38	5054	0.988	25.1	1635	2435
550	19×7×41	5453	1.056	26.8	1765	2630
600	19×7×45	5985	1.125	28.6	1940	2885
650	19×7×49	6517	1.166	29.6	2110	3140
700	19×7×52	6916	1.207	30.7	2240	3335
750	19×7×57	7581	1.276	32.4	2455	3655
800	19×7×60	7980	1.305	33.1	2585	3845
900	37×7×35	9065	1.323	33.6	2935	4370
1000	37×7×39	10101	1.419	36.0	3270	4870

NEMA Authorized Engineering Information 7-14-1982.

Copyright National Electrical Manufacturers Association
Provided by IHS under license with NEMA
No reproduction or networking permitted without license from IHS

Not for Resale

Table L-8

Copper Conductors, Class M
Each Individual Strand 34 AWG, 0.0063 Inch (0.160 mm)

Conductor Size, AWG or kcmil	Suggested Construction	Approximate Number of Strands	Approximate Outisde Diameter		Approximate Weight	
			inches	mm	Pounds per 1000 Feet	g/m
20	1×26	26	0.038	0.97	3.2	4.74
18	1×41	41	0.048	1.22	5.0	7.48
16	1×65	65	0.060	1.52	8.0	11.9
14	1×104	104	0.078	1.98	12.8	19.0
12	7×24	168	0.101	2.57	21.0	31.2
10	7×37	259	0.126	3.20	32.5	48.2
9	7×48	336	0.146	3.71	42	62.5
8	7×60	420	0.162	4.11	53	78.1
7	19×28	532	0.196	4.98	67	100.0
6	19×35	665	0.215	5.46	84	125
5	19×44	836	0.240	6.10	105	157
4	19×56	1064	0.269	6.83	134	200
3	7×7×27	1323	0.305	7.75	169	251
2	7×7×34	1666	0.337	8.56	212	316
1	7×7×43	2107	0.376	9.55	268	399
1/0	7×7×54	2646	0.423	10.7	337	501
2/0	19×7×25	3325	0.508	12.9	427	636
3/0	19×7×32	4256	0.576	14.6	547	814
4/0	19×7×40	5320	0.645	16.4	684	1020
250	19×7×48	6384	0.713	18.1	821	1220
300	19×7×57	7581	0.768	19.5	975	1450
350	37×7×34	8806	0.825	21.0	1130	1685
400	37×7×39	10101	0.901	22.9	1300	1930
450	37×7×44	11396	0.940	23.9	1465	2180
500	37×7×49	12691	0.997	25.3	1630	2430
550	61×7×32	13664	1.035	26.3	1755	2615
600	61×7×35	14945	1.084	27.5	1920	2860
650	61×7×38	16226	1.133	28.8	2085	3105
700	61×7×41	17507	1.183	30.0	2250	3350
750	61×7×44	18788	1.207	30.7	2415	3595
800	61×7×47	20069	1.256	31.9	2580	3840
900	61×7×53	22631	1.331	33.8	2910	4330
1000	61×7×59	25193	1.404	35.7	3240	4820

NEMA Authorized Engineering Information 7-14-1982.

Copyright National Electrical Manufacturers Association
Provided by IHS under license with NEMA
No reproduction or networking permitted without license from IHS

Not for Resale

Appendix M●

AMPACITIES FOR PREASSEMBLED AERIAL CABLES

For ampacities, see AIEE-IPCEA Power Cable Ampacities, IEEE Publications No. S-135, 1962, Vol. 1 for Copper Conductors or Vol. 2 for Aluminum Conductors, pages 258 through 261.

● Appendix M formerly Appendix F.

Copyright National Electrical Manufacturers Association
Provided by IHS under license with NEMA
No reproduction or networking permitted without license from IHS

Not for Resale

WC 3-80 6470247 0004823 0

Appendix N ●

FLEXIBLE CORDS AND REMOTE CONTROL AND DRILL CORDS

N1.1 Ampacities of Flexible Cords. Ampacities of flexible cords are based on the number of current-carrying conductors. The ampacities shown in Table N-1 are based on an ambient temperature of 30°C.

When cords are used with one or more layers wound on a reel, the ampacities shall be corrected in accordance with Table N-2.

N2.1 National Electrical Code Type Designations and Maximum Voltage Ratings of Multiple-conductor Flexible Cords. See Table N-3.

N3.1 Remote Control and Drill Cords. Remote control and drill cords intended for use in underground mines in accordance with Schedule 2G of the U.S. Bureau of Mines comply with the constructions given in 7.7 in sizes 14 to 10 AWG, except for the jackets and number of conductors. The jackets shall be applied in two layers with a reinforcement between them and are approximately 50 mils (1.27 mm) thicker than those shown in Table 7.7-6. The cords shall comply with the flame resistance requirements of Schedule 2G. The outside diameters shall be in accordance with Table N-4.

Table N-1
Ampacities

Conductor Size, AWG	Number of Current-carrying Conductors in Cord		
	2	3	4
18	10	7	6
16	13	10	8
14	18	15	12
12	25	20	16
10	30	25	20

Table N-2
Ampacity Correction Factors

Number of Layers	Multiplying Correction Factors
1	0.85
2	0.65
3	0.45
4	0.35

Table N-4
Outside Diameters

Conductor Size, AWG	Number of Conductors	Outside Diameter		
		Nominal		Tolerances, Plus and Minus
		inches	mm	
14	2	0.64	16.3	0.02
	3	0.67	17.0	0.02
	4	0.71	18.0	0.02
	5	0.78	19.8	0.03
	6	0.83	21.1	0.03
	7	0.89	22.6	0.03
12	2	0.68	17.3	0.02
	3	0.72	18.3	0.03
	4	0.76	19.3	0.03
	5	0.83	21.1	0.03
	6	0.89	22.6	0.03
	7	0.98	24.9	0.03
10	2	0.73	18.5	0.03
	3	0.80	20.3	0.03
	4	0.84	21.3	0.03
	5	0.90	22.8	0.03
	6	1.00	25.4	0.03
	7	1.07	27.2	0.03

Table N-3
NEC Type Designations and Maximum Voltage Ratings

Conductor Size, AWG	Insulation Thickness		Jacket Thickness, 2, 3 and 4 Conductors		NEC Type Designations*		Maximum Voltage Ratings, Volts
	mils	mm	mils	mm			
18	30	0.76	30	0.76	SJ, SJT	SJO, SJTO	300
18	30	0.76	60	1.53	S, ST	SO, STO	600
16	30	0.76	30	0.76	SJ, SJT	SJO, SJTO	300
16	30	0.76	60	1.53	S, ST	SO, STO	600
14	45	1.14	80	2.04	S, ST	SO, STO	600
14	30	0.76	30	0.76	SJ, SJT	SJO, SJTO	300
12	45	1.14	95	2.42	S, ST	SO, STO	600
10	45	1.14	95	2.42	S, ST	SO, STO	600

* S and SO designate extra hard service cords. SJ and SJO designate hard service cords. T designates a thermoplastic (polyvinyl chloride) jacket. O designates an oil-resistance jacket.

● Appendix N formerly Appendix I.

Copyright National Electrical Manufacturers Association
Provided by IHS under license with NEMA
No reproduction or networking permitted without license from IHS
Not for Resale

Appendix O ●

JACKET THICKNESSES FOR PORTABLE CABLES NOT COVERED BY TABLES 7.6-2 TO 7.6-13

Calculated Diameter Under Jacket		Jacket Thickness		Calculated Diameter Under Jacket		Jacket Thickness	
inches	mm	mils	mm	inches	mm	mils	mm
0.325 and less	8.26 and less	60	1.52	1.551–1.820	39.40–46.23	205	5.21
0.326–0.430	8.28–10.92	80	2.03	1.821–2.050	46.25–52.07	220	5.59
0.431–0.540	10.95–13.72	95	2.41	2.051–2.300	52.10–58.42	235	5.97
0.541–0.640	13.74–16.26	110	2.79	2.301–2.550	58.45–64.77	250	6.35
0.641–0.740	16.28–18.80	125	3.18	2.551–2.800	64.80–71.12	265	6.73
0.741–0.850	18.82–21.59	140	3.56	2.801–3.100	71.15–78.74	280	7.11
0.851–1.100	21.62–27.94	155	3.94	3.101–3.500	78.77–88.90	295	7.49
1.101–1.320	27.97–33.53	170	4.32	3.501–3.950	88.93–100.33	310	7.87
1.321–1.550	33.55–39.37	190	4.83	3.951–4.450	100.36–113.03	330	8.38
				4.451–5.000	113.06–127.00	345	8.76

● Appendix O formerly Appendix L.

Copyright National Electrical Manufacturers Association
Provided by IHS under license with NEMA
No reproduction or networking permitted without license from IHS

Not for Resale

NEMA STANDARDIZATION

The purpose of NEMA Standards, their classification and status are set forth in certain clauses of the NEMA Bylaws, which are quoted below:

Purpose of Standards

National Electrical Manufacturers Association Standards are adopted in the public interest and are designed to eliminate misunderstandings between the manufacturer and the purchaser and to assist the purchaser in selecting and obtaining the proper product for its particular need. Existence of a National Electrical Manufacturers Association Standard does not in any respect preclude any member or nonmember from manufacturing or selling products not conforming to the standard.

(Bylaw—Art. V, Sec. 1)

Definition of a Standard

A standard of the National Electrical Manufacturers Association defines a product, process or procedure with reference to one or more of the following: nomenclature, composition, construction, dimensions, tolerances, safety, operating characteristics, performance, rating, testing, and the service for which they are designed.

(Bylaw—Art. V, Sec. 2, Subsection A)

Dimensions

Where dimensions are given for interchangeability purposes, alternate dimensions satisfying the other provisions of the standards publication may be capable of otherwise equivalent performance.

(NEMA Policy Memorandum 84-2, dated June 7, 1984)

Classes of Standards

National Electrical Manufacturers Association Standards are of two classes:

1. NEMA Standard, which relates to a product commercially standardized and subject to repetitive manufacture, which standard has been approved by at least 90 percent of the members of the Subdivision eligible to vote thereon;
2. Suggested Standard for Future Design, which may not have been regularly applied to a commercial product, but which suggests a sound engineering approach to future development, which standard has been approved by at least two-thirds of the members of the Subdivision eligible to vote thereon.

(Bylaw—Art. V, Sec. 2, Subsection B)

Authorized Engineering Information

Authorized Engineering Information consists of explanatory data and other engineering information of an informative character not falling within the classification of NEMA Standard or Suggested Standard for Future Design.

(Bylaw—Art. V, Sec. 6, 1st Sentence)

Official Standards Proposal

An Official Standards Proposal is an official draft of a proposed standard which is formally recommended to an outside organization(s) for consideration, comment and/or approval.

(Bylaw—Art. V, Sec. 4, Subsection A)

Identification of Status

Standards in NEMA Standards Publications are identified in the foreword or following each standard as "NEMA Standard" or "Suggested Standard for Future Design." These indicate the status of the standard. These words are followed by a date which indicates when the standard was adopted in its present form by the Association.

The material identified as "Authorized Engineering Information" and "Official Standards Proposal" is designated similarly.

Copyright National Electrical Manufacturers Association
Provided by IHS under license with NEMA
No reproduction or networking permitted without license from IHS

Not for Resale