2595512 0078633 T69

ADOPTION NOTICE

NEMA-WC26, "Wire and Cable Packaging," was adopted on October 3, 1994 for use by the Department of Defense (DoD). Proposed changes by DoD activities must be submitted to the DoD Adopting Activity: Commanding Officer, Naval Construction Battalion Center, Code 156, 1000 23rd Avenue, Port Hueneme, CA 93043-4301. DoD activities may obtain copies of this standard from the Standardization Document Order Desk, 700 Robbins Avenue, Building 4D, Philadelphia, PA 19111-5094. The private sector and other Government agencies may purchase copies from the National Electrical Manufacturers Association, 2101 L Street, NW, Suite 300, Washington, DC 20037.

Custodians:
Army - CR
Navy - YD-1
Air Force - 85

Adopting Activity
Navy - YD-1

FSC 6145

DISTRIBUTION STATEMENT A. Approved for public release; distribution is unlimited.

Copyright National Electrical Manufacturers Association
Provided by IHS under license with NEMA
No reproduction or networking permitted without license from IHS
Not for Resale

STD-NEMA WC 26-ENGL 1996 ■ 6470247 0510966 95T ■

NEMA STANDARDS PUBLICATION

NEMA WC 26
EEMAC 201

BINATIONAL WIRE AND CABLE PACKAGING STANDARD

NATIONAL ELECTRICAL MANUFACTURERS ASSOCIATION

Copyright National Electrical Manufacturers Association
Provided by IHS under license with NEMA
No reproduction or networking permitted without license from IHS

Not for Resale

NEMA Standards Publication No. WC 26-1996
EEMAC Standards Publication 201-1996
BINATIONAL WIRE AND CABLE PACKAGING STANDARD

Published by

National Electrical Manufacturers Association
1300 North 17th Street, Suite 1847
Rosslyn, Virginia 22209

© Copyright 1997 by the National Electrical Manufacturers Association. All rights including translation into other languages, reserved under the Universal Copyright Convention, the Berne Convention or the Protection of Literary and Artistic Works, and the International and Pan American Copyright Conventions.

Copyright National Electrical Manufacturers Association
Provided by IHS under license with NEMA
No reproduction or networking permitted without license from IHS
Not for Resale

TABLE OF CONTENTS

Foreword ii
Section 1 GENERAL 1
1.1 Scope 1
Section 2 CONSTRUCTION OF PACKAGE TYPES 3
2.1 Returnable Reels 3
2.1.1 Gas-Tight Returnable Steel Shipping Reels 3
2.1.2 Steel Fluted Reels 3
2.1.3 Engineered Plastic Reels 3
2.2 Reusable Wood Reels 3
2.2.1 Wood Reels 3
2.3 Non-Returnable Reels 4
2.3.1 Steel Reels 4
2.3.2 Wood Reels 4
2.3.3 Engineered Plastic Reels 4
2.3.4 Plywood Reels and Spools 4
Figure 2-1 Type RM Steel Reel 5
Figure 2-2 Type RMT Steel Reel 6
Table 2-1 Gas Tight Returnable Steel Shipping Reels for Pipe-Type Cable 7
Table 2-2 General Purpose Steel Fluted Returnable Reels-Class 1 8
Table 2-3 Heavy Duty Steel Fluted Returnable Reels-Class 2 9
Table 2-4 General Purpose Wood Reels-Class 1 10
Table 2-5 Heavy Duty Wood Reels Class 2 11
Table 2-6 Reusable or Extra Heavy Duty Wood Reels-Class 3 12
Table 2-7 Non Returnable Plywood Reels And Spools 14
Section 3 MINIMUM DRUM DIAMETERS 15
Table 3.1 Minimum Drum Diameters 15
Section 4 REEL COVERINGS 17
4.1 Recommended Minimum Requirements 17
Table 4-1 Recommended Product Level Protection 18
Section 5 RECOMMENDED MARKING AND IDENTIFICATION 19
Section 6 HANDLING AND STORAGE RECOMMENDATIONS 21
6.1 Handling Recommendations 21
6.2 Storage Recommendations 21
Section 7 CAPACITIES OF PACKAGE TYPES 21
7.1 Calculation of Reel Capacity 23
7.1.1 Calculation of Reel Capacity in Feet 23
7.1.2 Calculation of Reel Capacity in Meters 23
7.1.3 Reel Capacity Parameters 23
7.2 Capacity Tables 23
Table 7-1 Reel Capacity In Feet 24
Table 7-2 Reel Capacity In Meters 36

Copyright National Electrical Manufacturers Association
Provided by IHS under license with NEMA
No reproduction or networking permitted without license from IHS
Not for Resale

Foreword

The purpose of this Standards Publication is to provide practical information concerning the packaging of wire and cable for the North American wire and cable industry. There are, however, scores of different sizes and types of wire and cable products; and the determination of the most desirable standard packages for each, from both the manufacturer's and users' point of view, requires careful consideration of the many variables.

The issuance or existence of these standards does not in any respect prevent or restrict any member or nonmember of NEMA or EFC from supplying customers with reels or packages not in conformance with these standards.

User input has been considered throughout the development of this Standards Publication.

This Standards Publication was developed by the Technical Harmonization Committee (THC) on Wire and Cable Packaging which consists of representatives from the Electrical Equipment Manufacturers Council (EEMAC) an affiliate of Electro-Federation Canada and the National Electrical Manufacturers Association (NEMA). This standards publication will be reviewed periodically by the THC and revised as necessary to keep it current with advancing technology. Comments or proposed revisions are welcomed and should be submitted to:

Vice President, Engineering
National Electrical Manufacturers Association
17th Street, Suite 1847
Rosslyn, Virginia 22209
United States

Vice President, EEMAC
Electro-Federation Canada Inc.
10 Carlson Court—Suite 210
Toronto, Ontario M9W 6L2
Canada

This Standards Publication was developed by the Building Wire and Cable Section and the Power and Control Cable Section of NEMA. Section approval of the standard does not necessarily imply that all section members voted for its approval or participated in its development. At the time it was approved, the Sections were composed of the following members:

AFC Cable Systems—New Bedford, MA
Alcan Cable—Atlanta, GA
Alcatel—Warrenton, VA
Amercable—El Dorado, AR
American Insulated Wire Corporation—Pawtucket, RI
BICC Cables Corporation—West Nyack, NY
Carol Cable Company, Inc.—Highland Heights, KY
Colonial Wire & Cable Co., Inc.—Hauppauge, NY
Encore Wire Corporation—McKinney, TX
Essex Group—Fort Wayne, IN
Furon Company—Aurora, OH
General Cable Corporation—Highland Heights, KY
Hendrix Wire & Cable Co.—Milford, NH
The Kerite Company—Seymour, CT
The Okonite Company—Ramsey, NJ
Pacific Electricord, Inc.—Gardena, CA

Copyright National Electrical Manufacturers Association
Provided by IHS under license with NEMA
No reproduction or networking permitted without license from IHS
Not for Resale

Pirelli Cables North America, Columbia, SC
The Rockbestos Company—East Granby, CT
Rome Cable Corporation—Rome, NY
Southwire Company—Carrollton, GA
Triangle Wire & Cable, Inc.—Lincoln, RI

This standard was developed in conjunction with EEMAC, the Electrical Equipment Manufacturers Council, an affiliate of Electro-Federation Canada. EEMAC is composed of:

Alcan Cable—Mississauga, ON
Alcatel Canada Wire, Inc.—Markham, ON
Belden (Canada) Inc.—Cobourg, ON
BICC Cables Corporation—West Nyack, NY
BIW Cable Systems, Ltd.—Burlington, ON
Cable Tech., a Division of Noma, Inc.—Stouffville, ON
Domtech Holdings, Inc.—Trenton, ON
Essex International, Inc.—Mississauga, ON
Noma Consumer Electrical—Scarborough, ON
Pirelli Cables, Inc.—St. Jean-Sur-Richelieu, QUE
Shawflex—Rexdale, ON

Copyright National Electrical Manufacturers Association
Provided by IHS under license with NEMA
No reproduction or networking permitted without license from IHS
Not for Resale

Section 1
GENERAL

1.1 Scope

This standard covers uniform requirements for packaging electrical wire and cable and replaces the following NEMA/EEMAC standards:

PC 1-1973	*Gas Tight Returnable Steel Shipping Reels for Pipe-type Cable*
WC 6-1980	*Minimum Drum Diameters of Reels for Cables*
WC 20-1976	*Dimensions and Capacities of Returnable Reels for Wires and Cables*
WC 21-1978	*Nonreturnable Reels for Wires and Cables*
WC 22-1979	*Construction of Steel Fluted Returnable Reels for Wires and Cables*
WC 25-1975	*Protective Coverings for Wire and Cable Reels*
WC 26-1990	*Wire and Cable Packaging (Rev 1-8-93)*
EEMAC 200-1-1995	*Returnable And Non-Returnable Reels*

Previous page
is blank

Copyright National Electrical Manufacturers Association
Provided by IHS under license with NEMA
No reproduction or networking permitted without license from IHS

Not for Resale

Section 2
CONSTRUCTION OF PACKAGE TYPES

2.1 RETURNABLE REELS

Returnable reels are intended to provide a package for the delivery, storage, and dispensing of the product and are intended to be returned to the cable manufacturer or reel recycler.

2.1.1 Gas-Tight Returnable Steel Shipping Reels

A suggested standard for future design of gas-tight returnable steel shipping reels for pipe-type cable is given in Table 2-1.

2.1.2 Steel Fluted Reels

Steel fluted reels utilize a fluted or corrugated flange design to develop a strong and durable package. Reels designated RM are constructed with flatbar tires (see Figure 2-1). Reels designated RMT utilize I-beam tires (see Figure 2-2). RM and RMT steel fluted reels are classified, as follows:

a. Class 1 reels shall be for general-purpose applications. Construction details and load limitations shall be in accordance with Table 2-2.

b. Class 2 reels shall be for heavy-duty applications. Construction details and load limitations shall be in accordance with Table 2-3.

2.1.3 Engineered Plastic Reels

Construction of engineered plastic reels shall be specified by the wire and cable manufacturer. General dimensions and capacities shall be in accordance with Table 2-6.

A more detailed table of specific construction will be added as these reels are developed in the marketplace.

2.2 REUSABLE WOOD REELS

Reels with flanges 36 inches or larger in diameter normally fall within the category of reusable reels.

Differences in the thickness of wood cuts have been provided for in the minimum flange ply (thickness) and the maximum overall width. All wood reels must meet both requirements for the applicable class.

2.2.1 Wood Reels

Reels varying from standard sizes may be designed for particular applications by applying the requirement for the same or next larger flange diameter.

a. Class 1 reels shall be for general purpose applications where cable is of high volume and low weight. Construction details of the standard sizes of Class 1 wood reels shall be in accordance with Table 2-4.

Copyright National Electrical Manufacturers Association
Provided by IHS under license with NEMA
No reproduction or networking permitted without license from IHS
Not for Resale

b. Class 2 reels shall be for heavy duty applications where cable is of low volume and greater weight. Construction details of the standard sizes of Class 2 wood reels shall be in accordance with Table 2-5.

c. Class 3 reels are reusable reels designed for multiple use or extra heavy duty applications where cable is of greater weight than listed for Class 2 wood reels. Construction details of the standard sizes of Class 3 wood reels shall be in accordance with Table 2-6.

2.3 NONRETURNABLE REELS

Nonreturnable reels provide a package for the delivery, storage, and dispensing of the product and are not intended to be returned.

Small nonreturnable packages are generally referred to as spools and are constructed of a variety of materials.

2.3.1 Steel Reels

Although steel reels are not generally used in nonreturnable application, some may be used to suit special circumstances and for export.

Construction of metal nonreturnable reels shall be specified by the wire and cable manufacturer.

2.3.2 Wood Reels

Construction of wood nonreturnable reels used to suit special circumstances and for export shall be specified by the wire and cable manufacturer.

2.3.3 Engineered Plastic Reels

Construction of Engineered Plastic nonreturnable reels used to suit special circumstances and for export shall be specified by the wire and cable manufacturer.

2.3.4 Plywood Reels and Spools

Plywood reels and spools are generally constructed in accordance with Table 2-7. Due to the many possible variations the final design shall be specified by the wire and cable manufacturer.

Copyright National Electrical Manufacturers Association
Provided by IHS under license with NEMA
No reproduction or networking permitted without license from IHS
Not for Resale

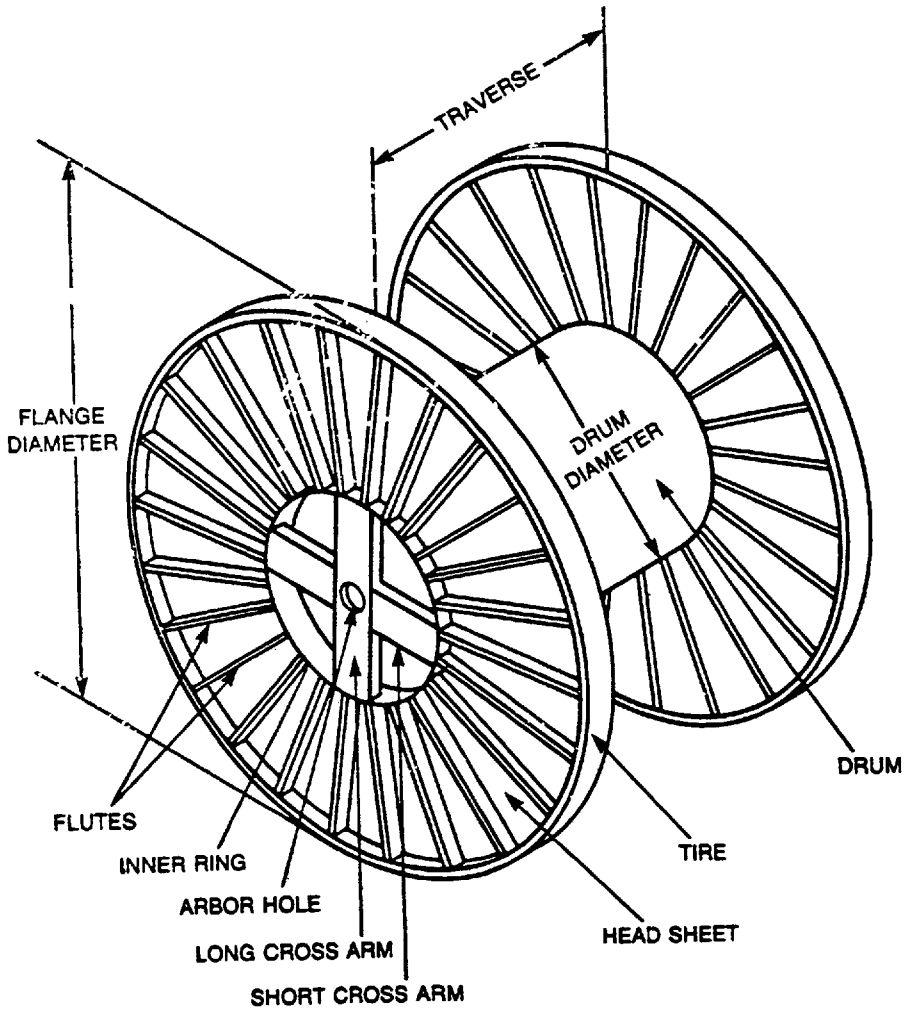

Figure 2-1
FLAT BAR TIRE FLUTED STEEL REEL-TYPE RM

Note—When required, cable test hole in the flange shall not have more than 3 flutes removed to provide this opening. The cable test hole shall be reinforced along the cutout with a metal equal to or greater than that required for use in the drum of the reel. Height of cable test hole to be no greater than one-half the length.

Copyright National Electrical Manufacturers Association
Provided by IHS under license with NEMA
No reproduction or networking permitted without license from IHS
Not for Resale

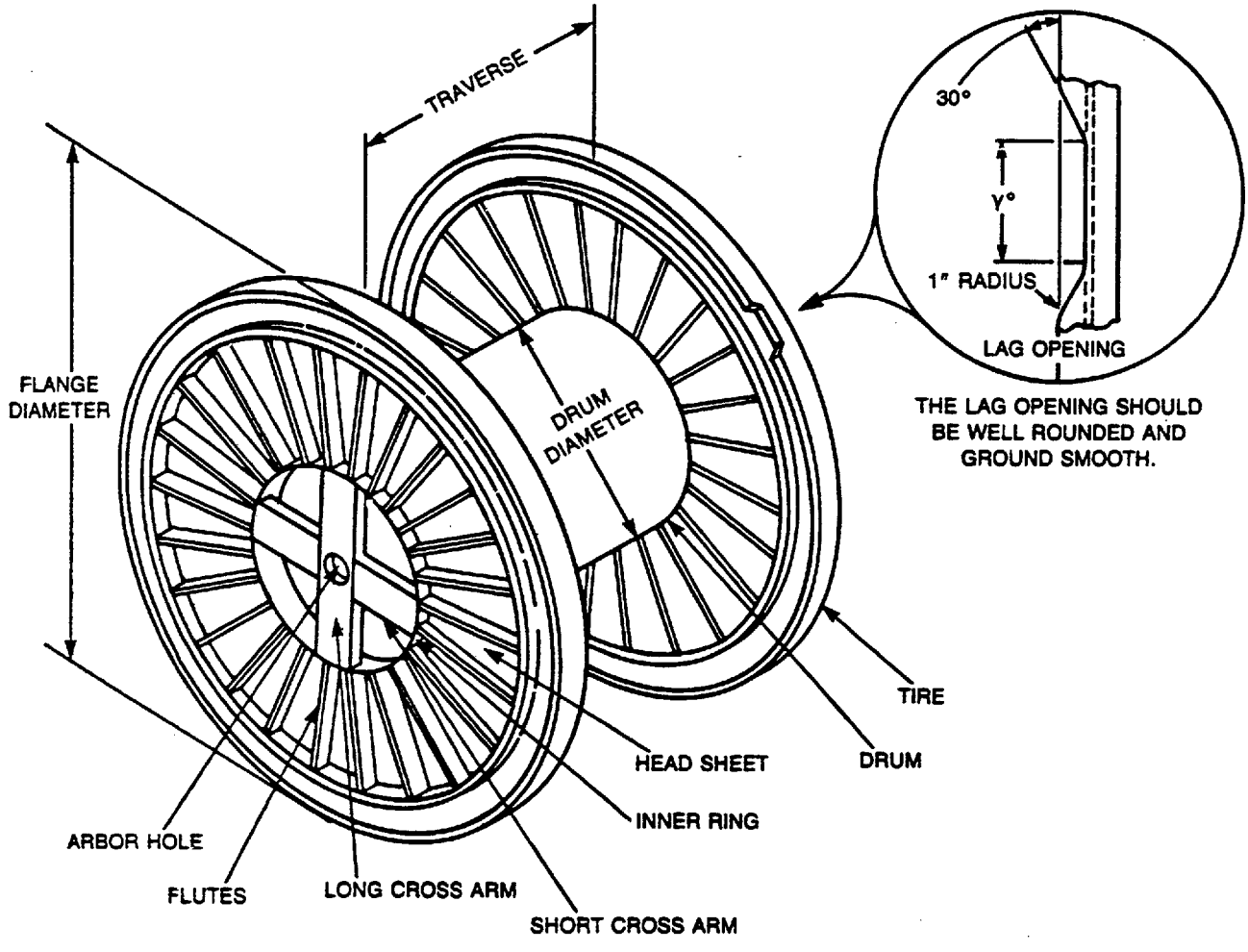

Figure 2-2
I-BEAM TIRE FLUTED STEEL REEL—TYPE RMT

Note—When required, cable test hole in the flange shall not have more than 3 flutes removed to provide this opening. The cable test hole shall be reinforced along the cutout with a metal equal to or greater than that required for use in the drum of the reel. Height of cable test hole to be no greater than one-half the length.

Copyright National Electrical Manufacturers Association
Provided by IHS under license with NEMA
No reproduction or networking permitted without license from IHS
Not for Resale

Copyright National Electrical Manufacturers Association
Provided by IHS under license with NEMA
No reproduction or networking permitted without license from IHS

Table 2-1
GAS TIGHT RETURNABLE STEEL SHIPPING REELS FOR PIPE-TYPE CABLE

Flange Diameter, Inches	Inside Traverse, Inches	Drum Diameter, Inches	Maximum Overall Width, Inches	Arbor, Inches
90	48	56	63	5-1/4
96	66	60	81	5-1/4
112	72	72	87	5-1/4
120	78	80	93	5-1/4
128	92	90	107	6-1/4
142	82	96	98	6-1/4

Not for Resale

Copyright National Electrical Manufacturers Association
Provided by IHS under license with NEMA
No reproduction or networking permitted without license from IHS
Not for Resale

Table 2-2
GENERAL PURPOSE STEEL FLUTED RETURNABLE REELS FOR WIRE AND CABLES—CLASS 1
(See Figures 2-1 and 2-2)

TYPE*	REEL DIMENSIONS FL	TRAV	DRUM	MAX O'ALL WIDTH INCHES	ARBOR HOLE DIA INCHES	MAX NUMBER FLUTES PER HD	TIRE SIZE INCHES	CROSS ARMS U.S.S. GAUGE	LONG INCHES	SHORT INCHES	DRUM U.S.S. GAUGE	INNER RING DIMENSIONS INCHES	(FLANGE) HEAD-SHEET U.S.S. GAUGE	MAXIMUM CAPACITY LBS	KGS
RM	42	24	24	33	3.25	24	2X5/16	8	5X2	4X2	12	3-3/4 x 3/16	16	1,956	887
RM	48	24	24	33	3.25	24	2X5/16	8	5X2	4X2	12	3-3/4 x 3/16	16	3,072	1,393
RM	54	32	32	41	3.25	30	2X5/16	8	5X2	4X2	12	3-3/4 x 3/16	16	4,464	2,024
RM	60	32	32	41	3.25	30	2X5/16	8	5X2	4X2	12	3-3/4 x 3/16	16	6,360	2,884
RM	66	32	36	41	3.25	32	2-1/2X1/2	8	6X2	5X2	12	3-3/4 x 3/16	16	7,680	3,482
RM	72	36	40	45	3.25	40	2-1/2X1/2	8	6X2	5X2	12	3-3/4 x 1/4	16	10,260	4,654
RM	72	36	48	45	3.25	40	2-1/2X1/2	8	6X2	5X2	12	3-3/4 x 1/4	16	7,872	3,570
RM	78	36	48	45	3.25	40	2-1/2X5/8 †	8	6X2	5X2	12	3-3/4 x 1/4	16	10,752	4,876
RMT	84	36	42	45	5.25	40	7.5LB/FT, 3" I-BEAM	8	7-7/8x2	6X2	10	4 x 1/4	16	13,608	6,171
RMT	84	45	42	55	5.25	40	7.5LB/FT, 3" I-BEAM	8	7-7/8x2	6X2	10	4 x 1/4	16	17,004	7,711
RMT	84	45	56	55	3.25	40	7.5LB/FT, 3" I-BEAM	8	7-7/8x2	6X2	10	4 x 1/4	16	11,196	5,050
RMT	90	45	42	55	5.25	40	7.5LB/FT, 3" I-BEAM	8	7-7/8x2	6X2	10	4-1/4 x 1/4	16	21,036	9,540
RMT	90	45	56	55	5.25	40	7.5LB/FT, 3" I-BEAM	8	7-7/8x2	6X2	10	4-1/4 x 1/4	16	15,216	6,900
RMT	90	54	56	64	5.25	40	7.5LB/FT, 3" I-BEAM	8	7-7/8x2	6X2	8	4-1/4 x 1/4	16	18,252	8,277
RMT	96	60	42	71	5.25	40	7.5LB/FT, 3" I-BEAM	8	7-7/8x3	6X3	8	4-1/2 x 5/16	14	26,000	11,719
RMT	96	60	56	71	5.25	40	7.5LB/FT, 3" I-BEAM	8	7-7/8x3	6X3	8	4-1/2 x 5/16	14	26,000	11,719
RMT**	108	74	56	85	5.25	40	7.5LB/FT, 3" I-BEAM	8	7-7/8x3	6X3	8	4-1/2 x 5/16	14	30,000	13,605

* RM—Flat bar tire

** Generally used for aluminum wire and cable

† Alternate size is 3 x 1/2 inches

RMT—I Beam Tire

Note—Tie holes, if necessary, shall be in the flat portion of the head sheet. There will be no holes in the flute itself.

WELDING REQUIREMENTS FOR CLASS 1 REELS

Head Sheet to tire-at all radii of flute-intermittent weld

Head sheet to inner ring-at all radii of flute-intermittent weld

Drum to inner ring-Intermittent weld

Cross arm to cross arm-continuous weld

Cross arm to inner ring-continuous weld

Cross arm to hub -continuous weld

Back-up plate to hub and cross arm--continuous weld

Port frame-continuous weld

All welds shall reflect good welding practice with proper penetration

STD-NEMA WC 26-ENGL 1996 ■ 6470247 0510979 508 ■

Copyright National Electrical Manufacturers Association
Provided by IHS under license with NEMA
No reproduction or networking permitted without license from IHS
Not for Resale

Table 2-3
HEAVY DUTY STEEL FLUTED RETURNABLE REELS FOR WIRE AND CABLES—CLASS 2
(See Figures 2-1 and 2-2)

	REEL DIMENSIONS			MAX O'ALL WIDTH	ARBOR HOLE DIA	MAX NUMBER FLUTES		CROSS ARMS			DRUM	INNER RING	(FLANGE) HEADSHEET	MAXIMUM CAPACITY	
TYPE*	FL	TRAV	DRUM	INCHES	INCHES	PER HD	TIRE SIZE	U.S.S. GAUGE	LONG INCHES	SHORT INCHES	U.S.S. GAUGE	DIMENSIONS INCHES	U.S.S. GAUGE	LBS	KGS
RM	42	24	24	33	3.25	24	2 x 1/2	8	5X2	4X2	12	3-3/4 x 3/16	16	3,260	1,478
RM	48	24	24	33	3.25	24	2 x 1/2	8	5X2	4X2	12	3-3/4 x 3/16	16	5,120	2,321
RM	50	32	23	38	3.25	24	2x1/2	8	5x2	5x2	10	3-3/4x3/16	16	8,000	3,630
RM	54	32	32	41	3.25	30	2 x 1/2	8	5X2	4X2	12	3-3/4 x 3/16	16	7,440	3,374
RM	60	32	32	41	3.25	30	2 x 1/2	8	5X2	4X2	12	3-3/4 x 3/16	16	10,600	4,807
RM	66	32	36	41	3.25	32	2-1/2 x 1/2	8	6X2	5X2	10	3-3/4 x 3/16	16	12,800	5,804
RM	68	38	28	46	3,25	28	21/2x1/2	8	6x2	6x2	11	3-3/4x3/16	16	7,000	3,630
RM	72	36	40	45	3.25	40	2-1/2 x 5/8 †	8	6X2	5X2	10	3-3/4 x 1/4	16	17,100	7,755
RM	72	36	48	45	3.25	40	2-1/2 x 5/8 †	8	6X2	5X2	10	3-3/4 x 1/4	16	13,120	5,950
RM	78	36	48	45	3.25	40	2-1/2 x 3/4 ††	8	6X2	5X2	10	3-3/4 x 1/4	16	17,920	8,126
RM	78	48	35	56	4.62	36	21/2x1/2	8	8x2	4x2	11	4-1/4X1/4	16	20,000	9,072
RMT	84	36	42	45	5.25	40	7.5LB/FT, 3" I BEAM	8	7-7/8X3	6X3	10	4X1/4	16	22,680	10,285
RMT	84	45	42	55	5.25	40	7.5LB/FT, 3" I BEAM	8	7-7/8X3	6X3	8	4X1/4	16	28,340	12,852
RMT	84	45	56	55	5.25	40	7.5LB/FT, 3" I BEAM	8	7-7/8X3	6X3	8	4X1/4	16	18,660	8,462
RMT	90	45	42	55	5.25	40	7.5LB/FT, 3 " I BEAM	8	7-7/8X3	6X3	8	4-1/4X1/4	16	30,000	13,605
RMT	90	45	56	55	5.25	40	7.5LB/FT, 3" I BEAM	8	7-7/8X3	6X3	8	4-1/4X1/4	16	30,000	13,605
RMT	90	54	56	64	5.25	40	7.5LB/FT, 3" I BEAM	8	7-7/8X3	6X3	7	4-1/4X1/4	16	30,000	13,605
RMT	96	60	42	71	5.25	40	7.5LB/FT, 3" I BEAM	7	7-7/8 x 3	7-7/8 x 3**	7	4-1/2 x 5/16	12	40,000	18,014
RMT	96	60	56	71	5.25	40	7.5LB/FT, 3 " I BEAM	7	7-7/8 x 3	7-7/8 x 3**	7	4-1/2 x 5/16	12	40,000	18,014
RMT	108	74	56	85	5.25	40	7.5LB/FT, 3" I BEAM	7	7-7/8 x 3	7-7/8 x 3**	7	4-1/2 x 5/16	12	40,000	18,014

* RM - Flat bar tire

** For added stability, two reinforcing angles, each 2" x 3" x 1/4", may be welded 180 degrees apart at the junction of the short and long cross arms and spanning the traverse of the reel.

† Alternate size is 3 x 1/2 inches

†† Alternate size is 3 x 5/8 inches

RMT-I Beam tire

NOTE—Tie holes, if necessary, shall be in the flat portion of the head sheet. There will be no holes in the -- flute itself

WELDING REQUIREMENTS FOR CLASS 1 C REELS

Head sheet to tire--continuous weld
Head sheet to inner ring--continuous weld
Drum to inner ring--continuous weld
Cross arm to cross arm-continuous weld
Cross arm to inner ring-continuous weld
Cross arm to hub - continuous weld
Back-up plate to hub and cross arm--continuous weld
Port frame-continuous weld
All welds shall reflect good welding practice with proper penetration

Copyright National Electrical Manufacturers Association
Provided by IHS under license with NEMA
No reproduction or networking permitted without license from IHS
Not for Resale

STD-NEMA WC 26-ENGL 1996 ■ 6470247 0510981 166 ■

Table 2-4
GENERAL PURPOSE REUSEABLE WOOD REELS—CLASS 1

REEL DIMENSIONS			MIN FL	MAX O'ALL	ARBOR HOLE	MIN STAVE	DRIVE PIN			TEST	BUSH OR	TIE RODS No. &	ASSEMBLY	MIN. # OF NAIL	APPROX TARE WT.		CAPACITY	
FL	TRAV	DRUM	THICK	WIDTH	DIA	THICK	QTY	DIA	RADIUS	HOLE	PLATE	Size	WASHERS	RINGS	LBS	KGS	LBS	KGS
36	24	17	1.50	28.5	3.062	0.750	1	1.25	6.0	2.0		4 x 3/8	2.5	3	66	30	1500	680
40	24	17	1.50	28.5	3.062	0.875	1	1.25	6.0	2		4 x 3/8	2.5	4	80	36	1500	680
42	26	18	1.50	30.5	3.062	0.875	1	1.25	6.0	2		4 x 3/8	2.5	4	90	41	1500	680
45	28	21	1.50	32.5	3.062	0.875	1	1.50	8.5	2.5		4 x 3/8	2.5	4	106	48	1500	680
50	32	24	1.75	37.0	3.062	1.062	2	1.50	10.0	2.5	*	6 x 3/8	2.5	4	143	65	3000	1360
54	32	26	1.75	37.0	3.062	1.062	2	1.50	10.0	3	*	6 x 3/8	2.5	5	164	74	3000	1360
58	32	28	1.75	37.0	3.062	1.062	2	1.50	10.0	3	*	6 x 3/8	2.5	5	187	85	3000	1360
66	32	36	2.25	38.0	3.062	1.125	2	3.00	11.5	4	YES	6 x 3/8	3.0	5	285	129	4500	2040
66	36	36	2.25	42.0	3.062	1.125	2	3.00	11.5	4	YES	6 x 3/8	3.0	5	292	132	4500	2040
72	36	36	2.25	42.0	3.062	1.125	2	3.00	11.5	4	YES	6 x 1/2	3.0	5	335	152	4500	2040
72	48	36	2.25	54.0	3.062	1.312	2	3.00	11.5	4	YES	6 x 1/2	3.0	5	397	180	4500	2040
78	48	42	2.25	54.0	3.062	1.312	2	3.00	11.5	4.5	YES	6 x 1/2	3.0	6	471	214	4500	2040
84	54	48	2.75	61.0	3.062	1.312	2	3.00	11.5	4.5	YES	8 x 1/2	3.0	6	639	290	6000	2720
90	54	48	2.75	61.0	3.062	1.312	2	3.00	11.5	4.5	YES	8 x 1/2	3.0	6	704	319	6000	2720
96	54	56	2.75	61.0	3.062	1.312	2	3.00	11.5	5	YES	8 x 1/2	3.0	6	816	370	6000	2720

* See Note 6.

Notes

1 Washers are required on all bolts. Cup washers are permitted where gross weight is not in excess of 6000 pounds and overall width is at a premium. Use of cup washers will reduce overall width by approximately 1 inch. Flat washers to be a minimum diameter of 3" with a minimum thickness of .125".

2 Tapered cable test holes are required. Elongated test holes can be provided upon request.

3 Center supports required on all reels with an inside traverse greater than 40" when 80% of the maximum reel capacity listed in Table 2-4 is exceeded. Center supports are recommended on reels 84" or larger.

4 Construction dimensions may be varied for cable weight and/or the volumetric capacity of the reel.

5 Headed nails are to be used, spaced 3 inches apart with a minimum countersink of 1/16" on the cable side and a 1/8" cinch on the opposite side.

6 Metal bushings are required when gross weight is in excess of 2500 lbs.

Copyright National Electrical Manufacturers Association
Provided by IHS under license with NEMA
No reproduction or networking permitted without license from IHS
Not for Resale

Table 2-5
HEAVY DUTY REUSEABLE WOOD REELS—CLASS 2

REEL DIMENSIONS			MIN FL THICK	MAX O'ALL WIDTH	ARBOR HOLE DIA	MIN STAVE THICK	DRIVE PIN			TEST	BUSH OR	TIE RODS No. &	ASSEMBLY WASHERS	MIN. # OF NAIL	APPROX. TARE WT.		MAXIMUM CAPACITY	
FL	TRAV	DRUM	INCHES	INCHES	INCHES	INCHES	QTY	DIA	RADIUS	HOLE	PLATE	Size	INCHES	RINGS	LBS	KGS	LBS	KGS
20	12	10	1.000	15.0	3.062	0.625	1	1.00	3.5	1.5		3 x 5/16	2.0	2	13	6	550	250
24	12	10	1.000	15.0	3.062	0.625	1	1.00	3.5	1.5		3 x 5/16	2.0	2	22	10	550	250
24	18	10	1.000	21.0	3.062	0.625	1	1.00	3.5	1.5		3 x 5/16	2.0	2	27	12	550	250
27	18	12	1.125	21.5	3.062	0.750	1	1.00	4.5	1.5		3 x 5/16	2.0	2	40	18	750	340
30	18	12	1.125	21.5	3.062	0.750	1	1.00	4.5	1.5		4 x 3/8	2.0	3	46	21	950	430
32	24	14	1.500	28.5	3.062	0.750	1	1.00	4.5	2.0		4 x 3/8	2.0	3	55	25	1500	680
36	24	17	1.750	28.5	3.062	1.062	1	1.25	6.0	2.0		4 x 3/8	2.5	3	81	37	2500	1135
40	24	17	1.750	28.5	3.062	1.062	1	1.25	6.0	2.0		4 x 3/8	2.5	4	94	43	2500	1135
42	26	18	1.750	30.5	3.062	1.062	1	1.25	6.0	2.0	*	4 x 3/8	2.5	4	110	50	3000	1360
45	28	21	1.750	32.5	3.062	1.062	1	1.50	8.5	2.5	*	5 x 3/8	2.5	4	125	57	3500	1590
50	32	24	2.125	38.0	3.062	1.250	2	1.50	10.0	2.5	*	6 x 3/8	2.5	4	180	82	4800	2180
54	32	26	2.125	39.5	3.062	1.250	2	1.50	10.0	3.0	*	6 x 3/8	2.5	5	235	107	6500	2950
58	32	28	2.125	39.5	3.062	1.250	2	1.50	10.0	3.0	*	6 x 3/8	2.5	5	265	120	6500	2950
66	32	36	2.750	39.5	3.062	1.375	2	3.00	11.5	4.0	YES	6 x 1/2	3.0	5	375	170	7000	3175
66	36	36	2.750	43.5	3.062	1.375	2	3.00	11.5	4.0	YES	6 x 1/2	3.0	5	431	196	8000	3630
72	36	36	3.000	43.5	3.062	1.375	2	3.00	11.5	4.0	YES	8 x 1/2	3.0	5	540	245	8000	3630
72	48	36	3.000	56.0	3.062	1.375	2	3.00	11.5	4.0	YES	8 x 1/2	3.0	5	565	255	8000	3630
78	48	42	3.000	56.0	3.062	1.375	2	3.00	11.5	4.5	YES	8 x 5/8	3.0	6	660	300	9000	4080
84	54	48	3.250	62.0	3.062	1.500	2	3.00	11.5	4.5	YES	8 x 5/8	3.0	6	940	425	10000	4535
90	54	48	3.250	62.0	3.062	1.500	2	3.00	11.5	4.5	YES	8 x 5/8	3.0	6	990	450	12000	5445
96	54	56	3.250	62.0	3.062	1.500	2	3.00	11.5	4.5	YES	8 x 5/8	3.0	6	1150	525	12000	5445

* See Note 6.

Notes

1 Washers are required on all bolts. Cup washers are permitted where gross weight is not in excess of 6000 pounds and overall width is at a premium. Use of cup washers will reduce overall width by approximately 1 inch. Flat washers to be a minimum diameter of 3" with a minimum thickness of .125".
2 Tapered cable test holes are required. Elongated test holes can be provided upon request.
3 Center supports required on all reels with an inside traverse greater than 40" when 80% of the maximum reel capacity listed in Table 2-5 is exceeded. Center supports are recommended on reels 62" or larger.
4 Construction dimensions may be varied for cable weight and/or the volumetric capacity of the reel
5 Headed nails are to be used, spaced 3 inches apart with a minimum coutnersink of 1/16" on the cable side and a 1/8" clinch on the opposite side.
6 Metal bushings are required when gross weight is in excess of 2500 lbs.

Copyright National Electrical Manufacturers Association
Provided by IHS under license with NEMA
No reproduction or networking permitted without license from IHS
Not for Resale

Table 2-6
EXTRA HEAVY DUTY REUSEABLE WOOD REELS—CLASS 3

REEL DIMENSIONS			MIN FLANGE	MAX O'ALL WIDTH	ARBOR HOLE DIA	MIN STAVE THHICK	DRIVE PIN			TEST	HUB PLATE		TIE RODS No. &	MIN. DIA. ASSEMBLY WASHERS	MIN. # OF NAIL	APPROX TARE WT.		CAPACITY	
FL	TRAV	DRUM	PLY	INCHES	INCHES	INCHES	QTY	DIA	RADIUS	HOLE	SIZE	BOLTS	Size	INCHES	RINGS	LBS	KGS	LBS	KGS
36	18	16	2 x 1.125	22.5	3.062	1.250	2	1.25	6.0	1.5 x 4	8 x 8 x 1/8	4 x 3/8	4 x 3/8	2.5	3	110	50	2500	1135
40	18	18	2 x 1.375	24.0	3.062	1.250	2	2.00	7.0	2.0 x 6	8 x 8 x 1/8	4 x 3/8	5 x 1/2	2.5	4	145	65	3500	1600
40	24	17	2 x 1.375	30.0	3.062	1.250	2	2.00	7.0	2.0 x 6	8 x 8 x 1/8	4 x 3/8	5 x 1/2	2.5	4	150	68	3500	1600
42	24	24	2 x 1.375	30.0	3.062	1.250	2	2.00	7.0	2.0 x 6	8 x 8 x 1/8	4 x 3/8	5 x 1/2	2.5	4	165	75	4000	1800
45	28	21	2 x 1.375	34.0	3.062	1.250	2	2.00	7.0	2.0 x 6	8 x 8 x 1/8	4 x 3/8	5 x 1/2	2.5	4	200	90	4000	1800
48	24	24	2 x 1.375	30.0	3.062	1.250	2	2.00	7.0	2.0 x 6	8 x 8 x 1/8	4 x 3/8	5 x 1/2	2.5	4	210	95	4000	1800
50	32	23	2 x 1.375	38.0	3.062	1.625	2	2.00	7.0	2.0 x 6	8 x 8 x 1/8	4 x 3/8	5 x 1/2	2.5	4	230	105	5000	2270
54	32	26	2 x 1.375	38.0	3.062	1.625	2	2.00	7.0	2.0 x 8	8 x 8 x 1/8	4 x 3/8	6 x 1/2	2.5	5	310	140	5000	2270
58	32	28	2 x 1.375	38.0	3.062	1.625	2	2.00	7.0	2.0 x 8	8 x 8 x 1/8	4 x 3/8	6 x 1/2	2.5	5	330	150	5000	2270
60	32	32	2 x 1.375	38.0	3.062	1.625	2	2.00	7.0	2.0 x 8	8 x 8 x 1/8	4 x 3/8	6 x 1/2	2.5	5	375	170	5000	2720
66	36	36	2 x 1.500	42.0	3.062	1.625	2	2.00	7.0	2.0 x 8	8 x 8 x 1/8	4 x 1/2	6 x 5/8	3.5	5	540	245	8000	3630
68	38	28	2 x 1.500	44.0	3.062	1.625	2	2.00	7.0	3.5x12	8 x 8 x 1/8	4 x 1/2	6 x 5/8	3.5	5	550	250	8000	3630
72	36	48	2 x 1.500	43.0	4.125	1.625	2	2.50	10.0	4.0 x 12	7 x 24 x 1/4	4 x 1/2	8 x 5/8	3.5	5	750	340	10000	4535
72	36	36	2 x 1.500	43.0	4.125	1.625	2	2.50	10.0	4.0 x 12	7 x 24 x 1/4	4 x 1/2	8 x 5/8	3.5	5	705	320	10000	4535
72	48	36	2 x 1.500	55.0	4.125	1.625	2	2.50	10.0	4.0 x 12	7 x 24 x 1/4	4 x 1/2	8 x 5/8	3.5	5	750	340	9000	4080
78	36	48	2 x 1.500	43.0	4.125	1.625	2	2.50	10.0	4.0 x 12	7 x 24 x 1/4	4 x 1/2	8 x 5/8	3.5	6	850	385	10000	4535
78	36	40	2 x 1.500	43.0	4.125	1.625	2	2.50	10.0	4.0 x 12	7 x 24 x 1/4	4 x 1/2	8 x 5/8	3.5	6	805	365	10000	4535
78	48	42	2 x 1.500	55.0	4.125	1.625	2	2.50	10.0	4.0 x 12	7 x 24 x 1/4	4 x 1/2	8 x 5/8	3.5	6	880	400	10000	4535
84	42	48	2 x 1.500	49.0	4.125	1.625	2	2.50	10.0	4.0 x 12	7 x 24 x 1/4	4 x 1/2	8 x 3/4	5.0	6	990	450	12000	5445
84	54	48	2 x 1.500	61.0	4.125	1.625	2	2.50	10.0	4.0 x 12	7 x 24 x 1/4	4 x 1/2	8 x 3/4	5.0	6	1080	490	12000	5445
90	46	56	3 x 1.375	55.0	5.250	1.625	2	2.50	10.0	4.0 x 18	12 x 28 x 1/4	6 x 1/2	10 x 3/4	5.0	6	1410	640	15000	6800
90	54	48	3 x 1.375	63.0	5.250	1.625	2	2.50	10.0	4.0 x 18	12 x 28 x 1/4	6 x 1/2	10 x 3/4	5.0	6	1455	660	15000	6800
96	46	56	3 x 1.375	55.0	5.250	1.625	2	2.50	10.0	4.0 x 18	12 x 28 x 1/4	6 x 1/2	10 x 3/4	5.0	6	1545	700	15000	6800
96	46	44	3 x 1.375	55.0	5.250	1.625	2	2.50	10.0	4.0 x 18	12 x 28 x 1/4	6 x 1/2	10 x 3/4	5.0	6	1500	680	15000	6800
96	54	56	3 x 1.375	63.0	5.250	1.625	2	2.50	10.0	4.0 x 18	12 x 28 x 1/4	6 x 1/2	10 x 3/4	5.0	6	1610	730	15000	6800
102	45	50	3 x 1.375	54.0	5.250	1.625	2	2.50	10.0	5.5 x 20	12 x 28 x 1/4	6 x 1/2	10 x 3/4	5.0	6	1640	745	15000	6800
108	46	60	3 x 1.375	55.0	5.250	1.625	2	2.50	10.0	5.5 x 20	12 x 28 x 1/4	6 x 1/2	10 x 3/4	5.0	6	1895	860	15000	6800

See Notes, next page

STD-NEMA WC 26-ENGL 1996 ■ 6470247 0510983 T39 ■

Notes

1 1.50" drum head support plus groove in flange for reels 72" and larger.

2 1.50" wide center support for reels 72" and larger.

3 Steel pipe through the reel from hub plate to hub plate on reel sizes 90" through 108".

4 Cup washers required.

5 Washers are required on all bolts.

6 Tapered cable test holes are required. Elongated test holes can be provided upon request.

7 Construction dimensions may be varied for cable weight and/or the volumetric capacity of the reel.

8 Headed nails are to be used, spaced 3" apart with a minimum countersink of 1/16" on the cable side and a 1/8" on the opposite side.

Copyright National Electrical Manufacturers Association
Provided by IHS under license with NEMA
No reproduction or networking permitted without license from IHS

Not for Resale

STD·NEMA WC 26-ENGL 1996 ■ 6470247 0510985 801 ■

Copyright National Electrical Manufacturers Association
Provided by IHS under license with NEMA
No reproduction or networking permitted without license from IHS

Not for Resale

Table 2-7
NONRETURNABLE PLYWOOD REELS AND SPOOLS

REEL DIMENSIONS			MIN	MAX	ARBOR HOLE	DRIVE PIN			TEST	TIE RODS	PLYWOOD DRUMS MIN NO. THICKNESS OF		METAL DRUMS	MAXIMUM CAPACITY	
FL	TRAV	DRUM	FL THICK	O'ALL WIDTH	INCHES (NOTE 2)	QTY	DIA	RADIUS	HOLE	NO @ SIZE	PLIES	PLIES	U.S.S. GAUGE MIN	LBS	KGS
6.50	Note 3	1.87	–	–	.75	1	.37	.81	3/8	Note 4	–	–	–	–	–
10.50	Note 3	3.50	–	–	1.430	1	.50	1.37	1-1/2	Note 4	–	–	–	–	–
14	10	6	.37	10.7	3.062	1	1.0	2.37	3/4	Note 4	–	–	–	100	45
18	10	6	.50	11.0	3.062	1	1.0	2.37	3/4	Note 4	–	–	–	185	84
24	12	10	.75	14.0	3.062	1	1.0	3.50	1-1/2	3x5/16	3	.187	22	350	159
24	18	10	.75	20.0	3.062	1	1.0	3.50	1-1/2	3x5/16	3	.187	20	525	238
27	18	12	.87	20.0	3.062	1	1.0	4.50	1-1/2	3x5/16	3	.187	20	700	317
30	18	12	.87	20.0	3.062	1	1.0	4.50	1-1/2	4x3/8	3	.25	20	950	431
32	24	14	1.0	26.5	3.062	1	1.0	4.50	2	4x3/8	3	.25	18	1500	680
36	24	17	1.0	26.5	3.062	1	1.0	6.0	2	4x3/8	3	.325	17	2000	907
40	24	17	1.12	27.0	3.062	1	1.0	6.0	2	4x3/8	3	.325	17	2500	1134
42	26	18	1.25	29.0	3.062	1	1.0	6.0	2	4x3/8	3	.325	16	3000	1360
45	28	21	1.25	31.0	3.062	1	1.50	8.50	2-1/2	5x3/8	–	–	16	3500	1587

Notes

1 Metal bushings are recommended where gross weight is in excess of 2500 pounds or 1133 kgs.

2 The 2.75 arbor hole will be allowed until the year 2000.

3 These items may be supplied in metal plastic or fiber, traverse width may range from 4 to 10 inches.

4 Bolts, steel strap and other fasteners may be used for spool assembly.

5 Manufacturer's choice of plywood or metal drum.

Section 3
MINIMUM DRUM DIAMETERS

Excessive or extreme bending can be detrimental to cable. Limitations on cable bending can best be expressed by identifying cable type and expressing the bending limit in terms of a multiplier of cable diameter.

Table 3-1
MINIMUM DRUM DIAMETERS OF REELS FOR CABLES

Type of Cable	Minimum Drum Diameter as a Multiple of Outside Diameter of Cable — Type of Insulation: Paper Solid and Gas	Paper Oil Filled	Varnish Cloth	Extruded
A. Single and multiple conductor nonmetallic covered cable				
1. Non-shielded and wire shielded, including cables with concentric wires:				
a) 0–2000 volts	14	...	14*	10
b) Over 2000 volts				
1) Non-jacketed with concentric wires	...	...	...	14
2) All others	14	...	14*	12
2. Tape shielded	14	...	14*	14
a) Helically applied	14	...	14*	14
b) Longitudinally applied flat tape	...	...	...	20
c) Longitudinally applied corrugated tape	...	...	...	14
B. Single and multiple-conductor metallic-covered cable:				
1. Tubular metallic sheathed;				
a) Lead	14	14**	14*	14
b) Aluminum				
1) Outside diameter—1.75" and less	25	25	25	25
2) Outside diameter—1.751" and larger	30	30	30	30
2. Wire armored	15	18	16*	16
3. Flat tape armored	16	18	16*	16
4. Corrugated metallic sheathed	16	18	14*	14
5. Interlocked armor	14	18	14*	14
C. Multiple single conductors cabled together without common covering, including self-supporting-cables. The circumscribing overall diameter shall be multiplied by the factor given in item A or B and then by the reduction factor:	0.85	...	0.85	0.75
D. For combinations of the types described in items A, B, C, the highest factor for any component types shall be used.	...	...	...	...
E. Single and multiple-conductor cable in coilable nonmetallic duct. Outside diameter of duct, inches.				
0.0–0.50	...	...	...	26
0.51–1.00	...	...	...	24
1.01–1.25	...	...	...	22
1.26–1.50	...	...	...	21
Over 1.50	...	...	...	19
F. Fiber Optic	20 x Fiber Optic Cable OD but in no case less than 12 inches.			

* For 1000 KCMIL and larger, no less than 25 x bare conductor OD.

** For single conductor cables with more than 500 mils of insulation, this factor is 18.

See Notes, next page

Copyright National Electrical Manufacturers Association
Provided by IHS under license with NEMA
No reproduction or networking permitted without license from IHS
Not for Resale

Notes

1 When metallic-sheathed cables are covered only by a thermosetting or thermoplastic jacket, the "outside diameter" is the diameter over the metallic sheath itself. In all other cases, the outside diameter is the diameter outside of all the material on the cable in the state in which it is to be wound upon the reel.

2 For "flat-twin" cables (where the cable is placed upon the reel with its flat side against the drum), the minor outside diameter shall be multiplied by the appropriate factor to determine the minimum drum diameter.

3 The multiplying factors given for item E refer to the outside diameter of the duct.

Copyright National Electrical Manufacturers Association
Provided by IHS under license with NEMA
No reproduction or networking permitted without license from IHS
Not for Resale

Section 4
REEL COVERINGS

4.1 REEL COVERINGS

Outlined below are minimum recommended requirements for protective coverings on reels containing electrical cable, cord, and wire for shipment under normal conditions and proper handling. Improved methods of handling, storage, and transportation would permit lesser degrees of protective covering. Five levels of protection are defined for product type and reel size as listed in Table 4-1.

Level 1: No covering normally required.

Level 2: Weather Protector

Purpose—To provide protection against weathering during storage
Materials—Weather resistant solid fiberboards greater than .020" in thickness
Weather resistant corrugated fiberboards greater than .030" in thickness
Flexible films greater than .006" in thickness
Laminates of film and fiberboard greater than .010" in thickness
Laminates of film and foam greater than .010" in thickness.

Level 3: Heavy Duty Physical Protector

Purpose—To provide increased physical protection
Materials—Weather resistant corrugated fiberboard, greater than .070" in thickness
Weather resistant corrugated fiberboard, greater than .100" in thickness
Plywood
Wood veneers
Wire bound lagging
Double wrap of Level 2 materials

Level 4: Extra Heavy Duty Physical Protector

Purpose—To provide a substantial amount of physical protection
Materials—Weather resistant solid fiberboard, greater than .100" in thickness
Wood lags
A double wrap of Level 3 materials
A double wrap of Level 2 materials combined with a wrap of Level 3 material

Level 5: Export

Purpose—To provide substantial amount of physical protection during prolonged transit
Materials—Wood lagging greater than a nominal 2.0" thickness for 40" and larger and 1" nominal lumber thickness for reels less than 40"
If containerized, Level 2 materials

Level 6: Special Packaging

Reel wrap may be reduced to any lesser level in the standard including no covering. In order to help avoid weathering or damage to the cable or reel during shipment, it is recommended that cable shipped with no covering be shipped in full truck load shipments either in closed vans or in tarpaulin covered trucks.

Copyright National Electrical Manufacturers Association
Provided by IHS under license with NEMA
No reproduction or networking permitted without license from IHS
Not for Resale

Table 4-1
RECOMMENDED PRODUCT LEVEL PROTECTION

	Reel Diameter Inches		
	Under 54	**54–72**	**Over 72**
Power and control cable 600 volts and less	1	2	2
Power cable: non-shielded over 600 volts	2	2	2
shielded through 39 kV	2	3	3
shielded 40 kV and up	3	4	4
Interlocked armored cable	2	2	2
Varnished cloth insulated or paper insulated power cable with lead sheath	3	4	4
Aluminum sheathed power cable	2	2	2
Preassembled plastic duct	1	1	1
Bare aluminum and ACSR under 230 kV	2	2	3
ACSR and EHV over 230 kV	4	4	4
Bare copper	2	2	2
Communications cable	2	2	2

	Reel Diameter Inches	
	Under 37"	**37" and larger**
Fiber Optic		
A. Full truckload shipment to designation	2	3
B. LTL shipment palletized	2	3
C. LTL shipment—not palletized —Double wrap of level protection listed for full truckload shipment or wood lagging.		

Copyright National Electrical Manufacturers Association
Provided by IHS under license with NEMA
No reproduction or networking permitted without license from IHS
Not for Resale

Section 5
RECOMMENDED MARKING AND IDENTIFICATION

All reels shall be marked and labeled with the following information on the outside of both flanges:

a. NEMA/EEMAC Class X
   where X = 1, 2, or 3 for the applicable reel class
b. Identification of Flange, Traverse, and Drum Dimension. This identification is to identify the volumetric capacity of the reel and determine if it is a standard reel for reuse or recycling by other than the initial user
c. Additional reel marking should be at the customer's request or at the cable manufacturer's option.

Copyright National Electrical Manufacturers Association
Provided by IHS under license with NEMA
No reproduction or networking permitted without license from IHS
Not for Resale

Section 6
HANDLING AND STORING OF CABLE REELS

This section lists general recommendations for handling and storing of cable reels.

6.1 HANDLING RECOMMENDATIONS

Reels should not be handled in any way that would result in damage to the cable or the reel.

Hooks or forks are not to be applied to the cable to lift the reel.

Reels should not be dropped from any height.

Roll reel in a direction to tighten cable wind. Surfaces on which reels are to be rolled should be flat, clear of debris and protrusions which could damage cable if straddled by the reel flange.

Reels shall be stored in a manner to prevent damage to the reel or cable.

Reels should not be stored near or come in contact with chemical spills, oils, or other harmful materials injurious to the cable or reels.

Factory applied reel coverings should remain in place until removal is necessary for cable installation.

Loose bolts should be tightened.

Previous page
is blank

Copyright National Electrical Manufacturers Association
Provided by IHS under license with NEMA
No reproduction or networking permitted without license from IHS

Not for Resale

Section 7
CAPACITIES OF PACKAGE TYPES

7.1 CALCULATION OF REEL CAPACITY FOR ROUND CABLES

The formulas for calculating the capacities of reels for round cable are shown in 7.1.1 and 7.1.2 and the parameters are defined in 7.1.3. A 5 percent nesting factor and a 95 percent traverse utilization have been built into the formula. Therefore, cables must be wound evenly to obtain uniformity, compactness and the nesting of successive turns and layers.

7.1.1 Reel Capacity in Feet

$$F = .2617\left[\left[B + \left(\frac{A-2X-B}{1.9D}\right)^{*} 0.95D\right]\left[\frac{A-2X-B}{1.9D}\right]^{*}\left[\frac{0.95C}{D}\right]^{*}\right]$$

* (Round off the resultant to the nearest lower whole number.

7.1.2 Reel Capacities in Meters

$$M = .3048 \times F$$

7.1.3 Reel Capacity Parameters

The following parameters are used in the formula in 7.1.1 and 7.1.2 above.

F = Feet of cable on reel
M = Meters of cable on reel
A = Flange diameter, in inches
B = Drum diameter, in inches
C = Inside traverse, in inches
D = Diameter of cable, in inches
X = Defined as the clearance distance between the cable and the outer edge of the reel flange and is equal to 1" or one cable diameter, which ever is larger. On "T" suffix reels, the clearance is based on the cable diameter less the tire consideration.

7.2 CAPACITY TABLES

The capacities for round cables for the reels specified in this standard are expressed in feet in Table 7-1 and in meters in Table 7-2. Varying cable construction may slightly affect the obtainable capacity.

These tables are constructed relating single conductor or multiconductor cable diameters across the top of tables to reel size by dimensions down the left column, with approximate capacities in feet or meters provided in the table bodies.

Previous page
is blank

Copyright National Electrical Manufacturers Association
Provided by IHS under license with NEMA
No reproduction or networking permitted without license from IHS

Not for Resale

STD·NEMA WC 26-ENGL 1996 ■ 6470247 0510995 750 ■

Copyright National Electrical Manufacturers Association
Provided by IHS under license with NEMA
No reproduction or networking permitted without license from IHS
Not for Resale

Table 7-1
REEL CAPACITIES IN FEET

Reel Dimensions			Cable Diameter (inches)														
FL	TR	DR	0.2	0.22	0.24	0.26	0.28	0.3	0.32	0.34	0.36	0.38	0.4	0.42	0.44	0.46	0.48	0.5
14	10	6	1633	1407	1190	1014	848	718	597	567	476	447	365	355	344	271	261	250
18	10	6	3500	2798	2313	2062	1678	1496	1320	1150	1028	873	856	746	641	622	525	507
20	12	10	4307	3544	2903	2513	2198	1897	1662	1439	1229	1167	1012	989	811	788	657	636
24	12	10	7350	5926	5095	4303	3652	3339	2746	2459	2181	1982	1726	1694	1452	1280	1246	1085
24	18	10	10961	8947	7697	6505	5569	5009	4159	3726	3307	2973	2589	2510	2207	1974	1897	1676
27	18	12	13966	11547	9568	8150	7046	5997	5356	4832	4324	3922	3450	3080	2726	2457	2358	2103
30	18	12	18673	15276	12998	10838	9572	8348	7180	6205	5622	5168	4613	4184	3769	3463	3076	2791
32	24	14	-	-	19133	15964	13983	12245	10585	9157	8294	7582	6887	6214	5566	5049	4550	4071
36	18	16	-	-	-	-	13058	11488	9985	8737	7963	6973	6256	5708	5276	4792	4293	3933
36	24	17	-	-	-	-	-	14578	12651	11583	9978	9141	8325	7534	6772	6167	5583	5021
40	18	18	-	-	-	-	-	14355	12312	10874	9962	8630	7970	7324	6318	5885	5306	5229
40	24	17	-	-	-	-	-	19525	17275	15343	13488	12513	10983	10061	9162	8462	7779	7114
42	26	18	-	-	-	-	-	23518	21004	18574	16488	14718	12806	11796	11003	10033	9274	8534
42	24	24	-	-	-	-	-	-	-	-	-	-	10021	9042	8103	7358	6641	5956
45	28	21	-	-	-	-	-	-	-	-	19535	17499	15307	14149	13015	11910	11039	10188
48	24	24	-	-	-	-	-	-	-	-	-	-	14473	13273	12104	11200	10319	9463
50	32	23	-	-	-	-	-	-	-	-	-	-	22092	20667	18399	17047	15725	14437
50	32	24	-	-	-	-	-	-	-	-	-	-	22069	20340	18058	16701	15376	14088
54	32	26	-	-	-	-	-	-	-	-	-	-	-	-	-	-	17904	16466
58	32	28	-	-	-	-	-	-	-	-	-	-	-	-	-	-	20623	19029

Table continued next page

Copyright National Electrical Manufacturers Association
Provided by IHS under license with NEMA
No reproduction or networking permitted without license from IHS
Not for Resale

Table 7-1 (Continued)
REEL CAPACITIES IN FEET

Reel Dimensions			Cable Diameter (Inches)															
FL	TR	DR	0.52	0.54	0.56	0.58	0.6	0.62	0.64	0.66	0.68	0.7	0.72	0.74	0.76	0.78	0.8	0.82
14	10	6	253	191	181	183	174	176	124	125	117	118	119	111	112	113	72	72
18	10	6	516	425	407	413	332	337	319	267	251	254	257	240	195	197	182	184
20	12	10	614	523	503	482	461	383	364	367	349	352	264	265	267	251	253	236
24	12	10	1050	946	913	771	780	748	619	626	596	602	486	490	495	467	393	368
24	18	10	1601	1396	1369	1177	1150	1123	947	921	931	903	745	752	726	700	589	566
27	18	12	2006	1768	1732	1508	1473	1436	1230	1195	1208	1017	983	993	958	788	795	763
30	18	12	2667	2397	2353	2095	2050	1806	1761	1533	1551	1506	1293	1307	1263	1067	1077	1036
32	24	14	3945	3578	3452	3103	3061	2663	2609	2299	2255	2209	1921	1877	1895	1625	1583	1540
36	18	16	3753	3410	3080	3014	2699	2633	2335	2270	2075	2013	1948	1765	1704	1642	1473	1415
36	24	17	4860	4434	3923	3869	3479	3331	2966	2910	2852	2511	2454	2397	2154	2100	2044	1752
40	18	18	4671	4279	3898	3815	3451	3102	3020	2690	2718	2637	2325	2347	2051	1975	1993	1718
40	24	17	6471	5994	5393	5328	4881	4328	4258	3949	3778	3389	3318	2951	2980	2909	2561	2492
42	26	18	7814	7118	6598	5947	5379	5256	5183	4719	4643	4198	4122	3699	3622	3223	3149	3178
42	24	24	5746	5227	5023	4533	4454	3878	3800	3367	3291	3214	2814	2741	2759	2384	2316	2247
45	28	21	9360	8559	7786	7043	6966	6254	6171	5635	5551	5036	4817	4335	4374	3909	3826	3742
48	24	24	8635	8029	7255	6686	6583	5870	5763	5244	5137	4643	4537	4069	4103	3653	3554	3454
50	32	23	13419	12425	11457	10519	9613	9528	8653	7989	7720	7086	6989	6378	6280	5548	5597	5496
50	32	24	13066	12071	11104	10169	9887	9179	8311	8217	7387	7288	6659	6560	5956	5707	5282	5184
54	32	26	15335	14230	13154	12109	11099	10995	10018	9283	8967	8264	8147	7468	7351	6528	6582	5961
54	32	32	-	11628	10579	10271	9277	8502	8215	7479	7203	7087	6400	6287	5634	5384	5416	4806
58	32	28	11785	16566	15376	14217	13094	12258	11881	11072	10054	9920	9165	8434	8300	7402	7463	6791
60	32	32	-	16429	15189	13987	12826	12688	11567	10727	10348	9547	9400	8627	8481	7542	7596	6891
66	32	36	-	-	-	-	15607	14618	14145	13192	11990	11811	10925	10065	9892	8835	8896	8108
66	36	36	-	-	-	-	17792	16408	15951	14626	13625	13185	12225	11293	11128	9997	9832	8985
68	38	28					24265	22763	21292	19853	18805	17429	16423	15940	14963	14007	13843	12910

Table continued next page

Copyright National Electrical Manufacturers Association
Provided by IHS under license with NEMA
No reproduction or networking permitted without license from IHS

Table 7-1 (Continued)
REEL CAPACITIES IN FEET

Reel Dimensions			Cable Diameter (Inches)															
FL	TR	DR	0.52	0.54	0.56	0.58	0.6	0.62	0.64	0.66	0.68	0.7	0.72	0.74	0.76	0.78	0.8	0.82
72	36	36	-	-	-	-	22732	21163	19636	19080	17968	16532	15478	15281	14254	12953	12753	11802
72	48	36	-	-	-	-	30310	28089	26306	25815	24077	22387	20748	20264	19005	17471	17307	15832
72	36	40	-	-	-	-	-	-	-	-	16516	15103	14047	13849	12827	12342	11373	11176
72	36	48	-	-	-	-	-	-	-	-	-	-	-	-	-	-	9026	8851
78	36	40	-	-	-	-	-	-	-	-	20301	19663	18486	17334	16209	15611	14536	14298
78	48	42	-	-	-	-	-	-	-	-	-	24940	23132	22564	21173	19476	19277	17646
78	36	48	-	-	-	-	-	-	-	-	-	-	-	-	-	-	12207	11175
84T	36	42	-	-	-	-	-	-	-	-	-	18417	17250	17015	15880	14439	14204	13154
84T	45	42	-	-	-	-	-	-	-	-	-	23405	21655	21084	19761	18132	17924	16683
84	42	48	43834	40949	37162	34464	32335	30256	28231	27537	25581	24109	22261	21603	20229	18888	18265	16984
84	54	48	-	-	-	-	-	-	-	-	-	-	-	-	-	-	23856	21937
90T	45	42	-	-	-	-	-	-	-	-	-	29679	27698	25773	24341	22519	22280	20922
90	54	48	-	-	-	-	-	-	-	-	-	-	-	-	-	-	29518	27380
96T	69	42	-	-	-	-	-	-	-	-	-	46583	44071	41604	39188	38492	36134	33836

Table continued next page

Not for Resale

Copyright National Electrical Manufacturers Association
Provided by IHS under license with NEMA
No reproduction or networking permitted without license from IHS
Not for Resale

Table 7-1 (Continued)
REEL CAPACITIES IN FEET

Reel Dimensions			Cable Diameter (Inches)															
FL	TR	DR	0.84	0.86	0.88	0.9	0.92	0.94	0.96	0.98	1	1.02	1.04	1.06	1.08	1.1	1.15	1.2
20	12	10	238	181	168	169	170	171	157	158	159	-	-	-	-	-	-	-
24	12	10	371	374	348	351	287	289	267	269	-	-	-	-	-	-	-	-
24	18	10	571	547	551	556	431	434	413	416	-	-	-	-	-	-	-	-
27	18	12	770	616	621	626	597	602	572	469	472	447	450	453	427	430	320	-
30	18	12	1046	866	874	881	842	721	687	692	697	661	666	558	527	530	504	-
32	24	14	1553	1308	1267	1277	1236	1062	1025	1033	995	1002	963	810	815	781	753	621
36	18	16	1427	1367	1211	122t	1165	1174	969	976	983	931	938	806	760	765	725	615
36	24	17	1765	1713	1659	1454	1406	1415	1366	1375	1133	1140	1095	1102	1108	1062	858	869
40	18	18	1733	1660	1488	1499	1431	1442	1207	1215	1224	1160	1168	1020	963	969	918	795
40	24	17	25t5	2189	2123	2141	2072	1853	1790	1804	1739	1537	1477	1488	1498	1244	1201	1220
42	26	18	2800	2727	2750	2397	2326	2845	2273	2033	1966	1980	1912	1690	1627	1638	1377	1331
42	24	24	2260	1920	1856	1866	1801	1565	1507	1514	1456	1463	1403	1194	1200	1147	1101	920
45	28	21	3310	3228	3253	2847	2769	2789	2709	2429	2354	2370	2294	2033	1964	1976	1670	1620
48	24	24	3158	3063	2966	2690	2600	2617	2524	2267	2182	2195	2108	1873	1883	1803	1514	1533
50	32	23	4944	4846	4325	4230	4262	3769	3677	3704	3609	3155	3176	3086	3106	2682	2622	2251
50	32	24	5085	4546	4449	4350	3971	3878	3783	3425	3336	3245	3266	2828	2845	2759	2377	2316
54	32	26	5846	5251	5146	5031	4625	4516	4405	4020	3916	3809	3834	3350	3370	3269	2847	2775
54	32	32	4702	4596	4033	3934	3954	3854	3337	3352	3259	3165	3179	2709	2720	2634	2562	2153
58	32	28	6659	6525	5892	5761	5803	5201	5073	5108	4541	4418	4446	3915	3939	3821	3357	3273
60	32	32	6750	6082	5946	5808	5350	5219	5086	4653	4528	4401	4426	3877	3897	3778	3295	3206
66	32	36	7941	7771	7032	6867	6909	6207	6047	6082	5420	5286	5296	4678	4701	4556	4011	3901
66	36	36	8823	8659	7859	7907	7746	6983	6828	6671	6143	5995	5844	5346	5205	5231	4474	4370
68	38	28	11723	11552	10955	10784	9939	9767	8958	8788	8859	8080	7910	7390	7226	7059	6426	5811
72	36	36	11602	10688	10489	9875	9681	9484	8645	8452	7891	7706	7519	6985	6806	6845	5966	5332

Table continued next page

STD·NEMA WC 26-ENGL 1996 ■ 6470247 0510994 3T6 ■

Copyright National Electrical Manufacturers Association
Provided by IHS under license with NEMA
No reproduction or networking permitted without license from IHS

Not for Resale

Table 7-1 (Continued)
REEL CAPACITIES IN FEET

Reel Dimensions			Cable Diameter (Inches)															
FL	TR	DR	0.84	0.86	0.88	0.9	0.92	0.94	0.96	0.98	1	1.02	1.04	1.06	1.08	1.1	1.15	1.2
72	48	36	15662	14524	14078	12993	12821	12646	11609	11436	10444	10275	10103	9386	9221	9054	8023	7236
72	36	40	10247	10054	9168	9223	9033	8186	8003	7818	7243	7067	6888	6344	6176	6207	5349	4721
72	36	48	7946	7780	7613	6955	6798	6640	6481	5702	5723	5574	5424	4864	4728	4743	3951	3843
78	36	40	13259	13022	12024	12107	11135	10906	9980	9756	9148	8932	8713	8134	7925	7969	6982	6278
78	48	42	17444	16189	15680	14486	14284	14079	12938	12736	11646	11450	11252	10467	10277	10084	8942	8072
78	36	48	10960	10742	9769	9817	9606	8679	8477	8273	7639	7446	7252	6653	6471	6497	5567	5425
84T	36	42	12921	11913	11683	11009	10786	10559	9634	9414	8799	8587	8373	7789	7585	7624	6649	5948
84T	45	42	16151	14967	14757	13616	13409	13199	12112	11906	10869	10669	10728	9736	9543	9346	8483	7435
84	42	48	16733	15497	15249	14061	13819	13573	12446	12207	11135	11191	10958	9936	9714	9760	8597	7736
84	54	48	21717	19876	19654	18215	17674	17450	16088	15868	14560	14347	14130	12890	12681	12470	11125	9845
84T	45	56	-	-	-	-	-	8530	7501	7352	7202	7051	7071	6132	5994	5856	5739	4773
90T	45	42	20273	18967	17696	17451	16221	15977	14792	14550	14304	13176	13258	12163	11929	11691	10751	9561
90	46	56	19593	17788	17521	16148	15887	14573	14321	14066	12824	12580	12633	11448	11214	10977	9930	8677
90	54	48	27128	25062	23478	23223	21296	21039	19566	19311	19052	17640	17384	16028	15779	15526	14039	12595
90T	45	56	-	-	-	-	-	11298	11090	9966	9770	9571	9606	8555	8369	8182	7247	6908
90	48	56	-	-	-	-	-	15206	14957	14704	13240	13178	12933	12006	11774	11540	10191	9159
90	54	56	-	-	-	-	-	17107	16866	16623	15210	14975	14738	13403	13176	12947	11497	10123
90T	54	56	-	-	-	-	-	13557	13358	12052	11863	11673	11480	10266	10086	9904	8618	8290
96	46	44	29009	26904	25388	25071	23591	22147	21828	20428	20108	18754	18885	17561	17247	15977	14890	13447
96T	60	42	31601	31387	29211	27543	26784	25260	25022	23448	23207	21290	21045	19583	19339	17929	16381	15946
96	54	56	-	-	-	-	-	22192	20602	20316	20027	18506	18224	16766	16943	16216	14603	13061
96T	60	56	-	-	-	-	-	19007	18775	18541	16999	16473	16242	14799	14578	14354	12804	11328
96	66	60	-	-	-	-	-	-	-	-	21012	20761	20507	18810	18565	18317	16198	14477
108T	74	56	-	-	-	-	-	36002	35725	33095	32813	30281	29997	27993	27711	25366	24864	22405
102	45	50	-	-	-	-	-	-	-	-	-	-	-	-	-	16940	15777	14228
112	72	72	-	-	-	-	-	-	-	-	-	-	-	-	-	-	21545	-

Table continued next page

Copyright National Electrical Manufacturers Association
Provided by IHS under license with NEMA
No reproduction or networking permitted without license from IHS

Not for Resale

Table 7-1 (Continued)
REEL CAPACITIES IN FEET

Reel Dimensions			Cable Diameter (Inches)															
FL	TR	DR	1.25	1.3	1.35	1.4	1.45	1.5	1.55	1.6	1.65	1.7	1.75	1.8	1.85	1.9	1.95	2
32	24	14	597	571	427	-	-	-	-	-	-	-	-	-	-	-	-	-
36	18	16	579	587	446	452	419	332	336	-	-	-	-	-	-	-	-	-
36	24	17	682	651	620	627	469	473	446	450	422	-	-	-	-	-	-	-
40	18	18	749	635	593	601	454	459	-	-	-	-	-	-	-	-	-	-
40	24	17	999	957	761	771	732	741	568	574	539	-	-	-	-	-	-	-
42	26	18	1284	1109	1065	850	861	820	778	639	602	608	615	-	-	-	-	-
42	24	24	880	838	636	641	606	611	574	440	412	414	417	387	389	277	255	256
45	28	21	1567	1293	1243	1055	1010	965	975	756	764	723	729	541	545	550	514	519
48	24	24	1471	1206	1148	976	924	933	880	728	682	687	693	511	515	518	478	482
50	32	23	2191	1849	1791	1730	1425	1441	1384	1171	1121	1069	1079	836	843	850	804	811
50	32	24	1961	1902	1842	1523	1466	1482	1194	1206	1153	899	907	861	868	875	653	657
54	32	26	2380	2309	1946	1879	1809	1567	1503	1519	1220	1162	1173	1113	918	926	875	881
54	32	32	2086	1713	1652	1589	1264	1273	1218	1227	938	891	897	849	854	859	619	622
58	32	28	2838	2754	2351	2270	1903	1923	1846	1598	1528	1456	1234	1171	1181	1191	1126	928
60	32	32	2756	2670	2257	2175	2092	1817	1742	1757	1417	1349	1359	1289	1069	1076	1015	1022
66	32	36	3390	3284	2812	2710	2280	2300	2204	1916	1829	1741	1484	1406	1416	1426	1346	1116
66	36	36	3814	3712	3195	3097	2622	2530	2553	2118	2033	2049	1658	1670	1593	1604	1525	1265
68	38	28	5037	4933	4379	3853	3750	3400	3300	3196	2736	2768	2337	2361	2267	2291	1895	1913
72	36	36	5207	4606	4036	3917	3795	3272	3307	2814	2705	2730	2781	2300	2197	1901	1809	1822
72	48	36	6943	6200	5327	5223	5115	4464	4359	3753	3652	3549	3122	3027	2930	2535	2448	2359
72	36	40	4601	4012	3895	3348	3238	3124	2760	2656	2549	2216	2120	2136	2038	1736	1650	1660
72	36	48	3733	3151	3050	2520	2429	2337	2350	1884	1803	1812	1730	1406	1338	1343	1274	1279

Table continued next page

Copyright National Electrical Manufacturers Association
Provided by IHS under license with NEMA
No reproduction or networking permitted without license from IHS

Table 7-1 (Continued)
REEL CAPACITIES IN FEET

Reel Dimensions			Cable Diameter (Inches)															
FL	TR	DR	1.25	1.3	1.35	1.4	1.45	1.5	1.55	1.6	1.65	1.7	1.75	1.8	1.85	1.9	1.95	2
78	36	40	5603	5459	4821	4679	4084	3946	3560	3430	3296	2940	2816	2840	2367	2385	2270	1965
78	48	42	7735	6915	5949	5826	5700	4982	4860	4192	4976	3958	3480	3380	3269	2836	2737	2635
78	46	48	4747	4611	3980	3851	3273	3152	3175	2645	2535	2551	2076	2088	1989	2000	1899	1586
84T	36	42	5801	5137	4507	4370	4229	3654	3687	3144	3019	3044	2550	1569	2452	2127	2023	2036
84	42	48	7343	6540	5775	5626	5474	4768	4622	3971	4001	3863	3264	3286	3158	2746	2631	2515
84T	45	42	7305	6322	5589	5462	5332	4650	4525	3893	3774	3805	3221	3110	3133	2600	2499	2515
84	54	48	9711	8502	7567	7233	7095	6234	6100	5294	5167	5038	4302	4182	4059	3530	3420	3309
84T	45	56	4664	3709	3691	3590	2927	2835	2749	2659	2089	2096	2020	1943	1950	1872	1394	1398
90T	45	42	8687	7605	7454	6665	6514	5767	5618	4920	4776	4302	4166	4027	3587	3458	3237	3353
90	46	56	8266	7342	7177	6305	6147	5334	5184	5033	4295	4155	4013	3503	3375	3393	3263	2667
90	54	48	11506	10188	10033	8790	8631	7697	7540	6659	6506	5681	5535	5387	4635	4668	4528	4385
90T	45	56	6041	5726	4933	4804	4673	3952	3832	3711	3068	3083	2974	2864	2404	2309	2213	2223
96	46	44	12061	11871	10882	9925	9001	8806	7924	7727	6893	6698	5918	5976	5233	5281	4577	4407
90	48	56	8752	7787	7401	6508	6352	5517	5369	5219	4460	4321	4347	3648	3521	3540	3411	2793
90	54	56	9968	8677	8522	7322	7171	6253	6110	5964	5120	4985	4848	4086	3961	3983	3856	3174
90T	54	56	7285	6978	6047	5765	5640	4799	4684	4568	3804	3700	3594	3487	2822	2834	2741	2646
96T	60	42	14451	13015	11926	10602	10461	9457	9060	8117	7968	7075	6927	6088	5946	5999	5209	5071
96	54	56	11884	11413	10300	8979	8803	7808	7637	7463	6538	6372	5513	5358	5200	5234	4452	4305
96T	60	56	10940	9566	9419	8136	7991	6988	6665	6524	5616	5484	5350	4524	4402	4425	4301	3555
96	66	60	14042	12424	10894	10499	10338	8935	8777	7678	7528	7167	6181	6039	5895	5144	5014	4882
102	45	50	13129	12516	11467	10453	9476	9250	8319	8094	7217	7287	6446	6233	5702	5501	4765	4803
108	46	60	13963	12788	11650	10554	10309	9267	9026	8044	7809	6891	6666	6071	5859	5900	5092	
108T	74	56	20418	18504	16667	16185	14450	13977	12636	12179	10917	10743	9544	9375	9203	8082	7918	7750
112	72	72	19045	18485	16485	14586	14381	12496	12395	11906	10537	10340	9048	8864	8442	8487	7312	7317
120	73	80	-	-	19387	17218	16994	14947	14421	14197	12321	12106	10624	10422	10218	10011	8655	8465
128	92	90	-	-	-	-	-	19514	17126	16595	16059	14172	13678	13458	11718	11515	11059	9474
142	82	96	-	-	-	-	-	-	-	20633	18615	17918	16027	15740	15449	13679	13070	12792

Table continued next page

Not for Resale

Copyright National Electrical Manufacturers Association
Provided by IHS under license with NEMA
No reproduction or networking permitted without license from IHS
Not for Resale

Table 7-1 (Continued)
REEL CAPACITIES IN FEET

Reel Dimensions			Cable Diameter (Inches)															
FL	TR	DR	2.05	2.1	2.15	2.2	2.25	2.3	2.35	2.4	2.45	2.5	2.55	2.6	2.65	2.7	2.75	2.8
42	24	24	257	235	236	237	238	215	134	-	-	-	-	-	-	-	-	-
45	28	21	482	-	-	-	-	-	-	-	-	-	-	-	-	-	-	-
48	24	24	485	334	336	338	340	308	310	-	-	-	-	-	-	-	-	-
50	32	24	618	622	626	586	590	445	413	-	-	-	-	-	-	-	-	-
54	32	26	829	659	664	620	624	-	-	-	-	-	-	-	-	-	-	-
54	32	32	583	586	583	549	552	393	364	366	367	368	339	340	341	342	344	314
58	32	28	872	878	885	827	658	662	615	618	622	626	577	580	438	440	442	
60	32	32	960	769	773	722	726	730	677	681	519	521	480	482	484	486	488	446
66	32	36	1048	1054	1061	991	794	798	740	744	748	752	692	696	530	532	535	488
66	36	36	1198	1205	1136	1143	916	859	864	868	810	814	818	822	578	581	583	586
68	38	28	1824	1565	1486	1499	1511	1429	1199	-	-	-	-	-	-	-	-	-
72	36	36	1728	1465	1382	1391	1400	1316	1324	1092	1020	1026	1031	1037	963	766	770	774
72	48	36	2376	1922	1935	1855	1867	1786	1797	1482	1412	1420	1349	1357	1364	1002	1027	1032
72	36	40	1572	1306	1231	1237	1244	1167	1174	941	878	882	886	890	826	829	833	636
72	36	48	1209	937	882	885	888	831	834	837	780	782	564	565	523	524	526	527
78	36	40	1862	1875	1769	1781	1510	1418	1427	1435	1341	1107	1113	1119	1038	1044	1049	1054
78	48	42	2653	2153	2166	2075	2087	1994	2006	1661	1582	1590	1509	1517	1524	1148	1153	1158
78	36	48	1500	1507	1419	1426	1152	1079	1084	1088	1014	1018	1022	1026	729	732	734	736
84T	36	42	1929	1640	1547	1556	1565	1469	1478	1224	1142	1148	1154	1160	1076	861	864	868
84	42	48	2530	2158	2055	2066	1962	1972	1866	1550	1557	1467	1473	1480	1487	1115	1119	1123
84T	45	42	2411	2051	1960	1971	1983	1889	1900	1486	1494	1502	1420	1428	1435	1076	1081	1085
84	54	48	3329	2725	2625	2639	2538	2551	2448	2034	1946	1955	1964	1874	1883	1512	1438	1444

Table continued next page

Copyright National Electrical Manufacturers Association
Provided by IHS under license with NEMA
No reproduction or networking permitted without license from IHS

Table 7-1 (Continued)
REEL CAPACITIES IN FEET

Reel Dimensions			Cable Diameter (Inches)															
FL	TR	DR	2.05	2.1	2.15	2.2	2.25	2.3	2.35	2.4	2.45	2.5	2.55	2.6	2.65	2.7	2.75	2.8
84T	45	56	1336	1339	1276	1280	1281	884	886	839	840	842	795	796	798	750	752	753
90T	45	42	2805	2825	2703	2336	2351	2242	2256	2144	1816	1826	1728	1738	1748	1648	1358	1365
90	46	56	2680	2564	2577	2459	2054	2063	1962	1970	1868	1876	1516	1432	1436	1441	1356	1361
90	54	48	3859	3729	3597	3117	2999	3017	2896	2913	2356	2368	2380	2273	2284	2296	1800	1808
90T	45	56	2126	1727	1646	1652	1658	1576	1582	1499	1162	1166	1100	1103	1107	1040	1043	1046
90	48	56	2807	2692	2705	2588	2162	2062	2071	2079	1978	1986	1515	1520	1526	1441	1446	1451
90	54	56	3190	3077	2963	2977	2378	2388	2289	2298	2198	2206	1783	1699	1705	1711	1627	1632
90T	54	56	2657	2072	1993	2000	1920	1927	1846	1852	1367	1371	1375	1310	1314	1318	1252	1256
96	46	44	4445	3798	3828	3665	3694	3276	3125	3148	2994	2619	2636	2497	2513	2529	2039	2051
96T	60	42	4931	4378	4249	4116	4147	3487	3511	3388	3411	3285	2828	2716	2733	2749	2634	2221
96	54	56	4331	3617	3484	3503	3368	3385	2756	2769	2649	2661	2674	2551	2122	2130	2026	2034
96T	60	56	3445	3461	3349	3235	2702	2605	2616	2517	2527	2427	1961	1878	1885	1891	1808	1814
96	66	60	4748	3930	3948	3829	3709	3725	3603	3009	2904	2915	2809	2820	2713	2192	2104	2110
102	45	50	4610	4144	3965	3994	4022	3386	3408	3240	3261	2859	2707	2723	2739	2583	2227	2239
108	46	60	4924	4286	4211	4024	4048	3566	3397	3415	3242	3260	2826	2673	2686	2698	2542	2161
108T	74	56	6718	6551	6402	5464	5495	5348	5199	5228	4375	4398	4262	4284	4146	3523	3403	3418
112	72	72	6961	5895	5735	5760	5598	5434	4656	4513	4368	4385	4238	4254	3420	3431	3305	3316
120	78	80	8272	7034	6860	6684	6507	6533	5432	5275	5293	5135	5152	4992	4033	4045	3907	3919
128	92	90	9287	9098	8908	8717	7309	7332	7162	6990	6817	5567	5582	5433	5283	5297	5145	5159
142	82	96	11487	11231	10972	9468	9231	8993	9026	8785	7441	7466	7249	7030	7054	5847	5864	5671

Table continued next page

Not for Resale

Copyright National Electrical Manufacturers Association
Provided by IHS under license with NEMA
No reproduction or networking permitted without license from IHS
Not for Resale

Table 7-1 (Continued)
REEL CAPACITIES IN FEET

Reel Dimensions			Cable Diameter (Inches)															
FL	TR	DR	2.85	2.9	2.95	3	3.1	3.2	3.3	3.4	3.5	3.6	3.7	3.8	3.9	4	4.1	4.2
54	32	32	315	196	196	197	178	-	-	-	-	-	-	-	-	-	-	-
60	32	32	448	450	317	318	288	-	-	-	-	-	-	-	-	-	-	-
66	32	36	490	492	494	496	450	318	320	287	288	-	-	-	-	-	-	-
66	36	36	588	541	543	546	550	354	356	358	324	-	-	-	-	-	-	-
72	36	36	778	716	720	723	730	504	508	512	464	-	-	-	-	-	-	-
72	48	36	1037	977	981	986	929	706	660	665	671	-	-	-	-	-	-	-
72	36	40	638	587	589	592	596	546	550	390	353	355	357	359	321	-	-	-
72	36	48	528	486	487	488	491	283	284	285	258	258	259	260	232	232	233	108
78	36	40	840	774	777	781	787	722	728	554	502	505	509	513	459	-	-	-
78	48	42	1163	1095	1099	1104	1039	794	742	747	752	699	704	497	458	461	463	-
78	36	48	739	679	682	684	688	448	450	453	409	411	413	415	232	232	233	234
84T	36	42	872	803	806	809	816	567	571	575	521	524	528	373	333	335	337	-
84	42	48	1128	1051	1055	1059	985	756	761	702	706	711	650	462	464	420	-	-
84T	45	42	1090	1022	1026	1030	965	737	685	690	694	641	645	456	417	419	421	-
84	54	48	1449	1374	1379	1385	1313	1007	950	956	898	904	844	600	603	559	562	565
84T	45	56	755	450	451	452	421	422	391	392	393	361	363	171	156	156	156	157
90T	45	42	1372	1287	1293	1299	1218	973	905	913	920	850	645	650	595	598	602	-
90	46	56	1365	1370	1283	988	994	928	933	866	871	624	575	577	580	529	532	534
90	54	48	1816	1723	1730	1738	1650	1323	1250	1259	1184	1193	844	850	855	794	798	803
90T	45	56	1049	982	708	709	661	664	616	619	621	572	363	364	332	333	334	334
90	54	56	1638	1552	1557	1199	1135	1142	1076	1082	1015	728	679	682	685	635	637	640

Table continued next page

STD·NEMA WC 26-ENGL 1996 ■ 6470247 0511005 2T8 ■

Table 7-1 (Continued)
REEL CAPACITIES IN FEET

Reel Dimensions			Cable Diameter (Inches)															
FL	TR	DR	2.85	2.9	2.95	3	3.1	3.2	3.3	3.4	3.5	3.6	3.7	3.8	3.9	4	4.1	4.2
90T	54	56	1259	1193	859	861	814	818	770	773	725	728	429	430	431	399	400	401
96	46	44	2063	2075	1948	1959	1658	1555	1571	1195	1205	1216	1125	-	-	-	-	-
96T	60	42	2234	2133	2145	2157	2065	1608	1623	1542	1556	1160	1169	1179	1109	1117	1046	-
96	54	56	2042	1936	1944	1563	1481	1491	1407	1416	1015	1021	953	958	964	894	899	640
96T	60	56	1820	1735	1741	1341	1277	1213	1220	1154	1161	780	783	787	737	741	691	693
96	66	60	2117	2028	2034	1943	1956	1435	1443	1374	1304	1311	1240	890	893	841	844	791
102	45	50	2251	2112	2123	2135	1682	1698	1582	1308	1319	1219	1228	1238	897	903	909	916
108	46	60	2170	2179	2043	2051	2068	1598	1609	1496	1507	1211	1117	1124	1131	1034	1040	795
108T	74	56	3296	3311	3178	3201	2545	2448	2467	2368	1901	1818	1829	1744	1755	1668	1274	1205
112	72	72	3326	3198	3208	2483	2497	2397	2295	2307	1697	1704	1622	1629	1545	1552	1467	1055
120	78	80	3930	3790	3801	2960	2851	2866	2755	2643	2051	1962	1969	1879	1886	1794	1801	1227
128	92	90	4065	4075	3948	3957	3838	3718	3596	2694	2596	2605	2506	2515	2414	1672	1677	1601
142	82	96	5687	5493	5508	5312	4463	4306	4147	3987	3243	3109	3122	2985	2848	2860	2220	2110

Table continued next page

Copyright National Electrical Manufacturers Association
Provided by IHS under license with NEMA
No reproduction or networking permitted without license from IHS
Not for Resale

Copyright National Electrical Manufacturers Association
Provided by IHS under license with NEMA
No reproduction or networking permitted without license from IHS

Table 7-1 (Continued)
REEL CAPACITIES IN FEET

Reel Dimensions			Cable Diameter (Inches)															
FL	TR	DR	4.3	4.4	4.5	4.6	4.7	4.8	4.9	5	5.25	5.5	5.75	6	6.25	6.5	6.75	7
72	36	48	95	95	95	95	96	-	-	-	-	-	-	-	-	-	-	-
78	36	48	205	206	207	207	208	-	-	-	-	-	-	-	-	-	-	-
78	48	42	294	295	296	267	268	-	-	-	-	-	-	-	-	-	-	-
84	54	48	520	523	525	527	298	-	-	-	-	-	-	-	-	-	-	-
84T	45	56	141	141	142	142	142	126	127	127	127	112	-	-	-	-	-	-
90	46	56	163	148	93	93	93	-	-	-	-	-	-	-	-	-	-	-
90	46	56	536	484	304	305	306	-	-	-	-	-	-	-	-	-	-	-
90	54	48	741	523	525	527	482	-	-	-	-	-	-	-	-	-	-	-
90T	45	56	302	303	304	305	305	272	127	127	127	112	-	-	-	-	-	-
90	48	56	536	538	337	305	305	306	307	308	276	278	-	-	-	-	-	-
90	54	56	589	592	371	372	339	340	341	342	310	313	-	-	-	-	-	-
90T	54	56	369	370	371	372	339	340	158	159	143	144	-	-	-	-	-	-
96	54	56	589	592	594	597	545	547	549	551	310	313	-	-	-	-	-	-
96T	60	56	696	645	405	406	407	375	376	377	345	347	-	-	-	-	-	-
96	66	60	794	797	743	746	469	470	435	436	403	405	371	-	-	-	-	-
108	46	60	799	723	727	730	734	737	659	662	-	-	-	-	-	-	-	0
108T	74	56	1212	1142	1148	1154	1082	766	769	772	724	675	-	-	-	-	-	-
112	72	72	992	995	999	935	938	942	877	880	557	518	477	480	439	441	444	185
120	78	80	1231	1162	1166	1170	1100	1102	1107	1036	659	615	571	574	529	531	486	226
128	92	90	1606	1530	1534	1538	1461	1465	1388	885	837	788	792	743	693	696	302	303
142	82	96	2117	2006	2013	1901	1907	1378	1295	1298	1220	1227	1147	674	677	624	626	629

Not for Resale

STD·NEMA WC 26-ENGL 1996 ■ 6470247 0511007 070 ■

Copyright National Electrical Manufacturers Association
Provided by IHS under license with NEMA
No reproduction or networking permitted without license from IHS

Not for Resale

Table 7-2
REEL CAPACITIES IN METERS

Reel Dimensions			Cable Diameter (Inches)														
FL	TR	DR	0.2	0.22	0.24	0.26	0.28	0.3	0.32	0.34	0.36	0.38	0.4	0.42	0.44	0.46	0.48	0.5
14	10	6	496	429	363	309	259	219	182	173	145	136	111	108	105	83	79	76
18	10	6	1067	853	705	629	511	456	402	351	313	266	261	227	195	190	160	154
20	12	10	1313	1081	885	766	670	578	507	439	375	356	308	301	247	240	200	194
24	12	10	2227	1796	1544	1304	1107	1012	832	745	661	601	523	513	440	388	378	329
24	18	10	3322	2711	2332	1971	1688	1518	1260	1129	1002	901	785	761	669	598	575	508
27	18	12	4232	3499	2899	2470	2135	1817	1623	1464	1310	1188	1045	933	826	745	715	637
30	18	12	5658	4629	3939	3284	2901	2530	2176	1880	1704	1566	1398	1268	1142	1049	932	846
32	24	14	-	-	5798	4838	4237	3711	3208	2775	2513	2298	2087	1883	1687	1530	1379	1234
36	18	16	-	-	-	-	3957	3481	3026	2648	2413	2113	1896	1730	1599	1452	1301	1192
36	24	17	-	-	-	-	-	4418	3834	3510	3024	2770	2523	2283	2052	1869	1692	1522
40	18	18	-	-	-	-	-	4376	3754	3315	3037	2631	2430	2233	1926	1794	1618	1594
40	24	17	-	-	-	-	-	5917	5235	4649	4087	3792	3328	3049	2776	2564	2357	2156
42	26	18	-	-	-	-	-	7127	6365	5628	4996	4460	3881	3575	3334	3040	2810	2586
42	24	24	-	-									3037	2740	2455	2230	2012	1805
45	28	21	-	-	-	-	-	-	-	-	5920	5303	4638	4288	3944	3609	3345	3087
48	24	24	-	-	-	-	-	-	-	-	-	-	4386	4022	3668	3394	3127	2868
50	32	23	-	-	-	-	-	-	-	-	-	-	6735	6301	5609	5197	4794	4402
50	32	24	-	-	-	-	-	-	-	-	-	-	6688	6164	5472	5061	4659	4269
54	32	26	-	-	-	-	-	-	-	-	-	-	-	-	-	-	5458	5020
58	32	28	-	-	-	-	-	-	-	-	-	-	-	-	-	-	6249	5766

Table continued next page

Copyright National Electrical Manufacturers Association
Provided by IHS under license with NEMA
No reproduction or networking permitted without license from IHS

Not for Resale

Table 7-2 (Continued)
REEL CAPACITIES IN METERS

Reel Dimensions			Cable Diameter (Inches)															
FL	TR	DR	0.52	0.54	0.56	0.58	0.6	0.62	0.64	0.66	0.68	0.7	0.72	0.74	0.76	0.78	0.8	0.82
14	10	6	77	58	55	56	53	54	38	38	36	36	36	34	34	34	22	22
18	10	6	157	130	124	126	101	103	97	81	76	77	78	73	59	60	56	56
20	12	10	187	159	153	147	141	117	111	112	106	107	80	81	81	77	77	72
24	12	10	318	287	277	234	236	227	188	190	181	182	147	148	150	142	119	112
24	18	10	485	423	415	357	348	340	287	279	282	274	226	228	220	212	178	172
27	18	12	608	536	525	457	446	435	373	362	366	308	298	301	290	239	241	231
30	18	12	808	726	713	635	621	547	534	465	470	456	392	396	383	323	326	314
32	24	14	1195	1084	1046	940	928	807	791	697	683	669	582	569	574	492	480	467
36	18	16	1137	1033	933	913	818	798	708	688	629	610	590	535	516	498	446	429
36	24	17	1473	1344	1189	1172	1054	1009	899	882	864	761	744	726	653	636	619	531
40	18	18	1424	1304	1189	1163	1052	946	921	820	829	804	709	716	625	602	608	524
40	24	17	1961	1816	1634	1615	1479	1312	1290	1197	1145	1027	1005	894	903	882	776	755
42	26	18	2368	2157	1999	1802	1630	1593	1571	1430	1407	1272	1249	1121	1098	977	954	963
42	24	24	1741	1584	1522	1374	1350	1175	1152	1020	997	974	853	831	836	722	702	681
45	28	21	2836	2594	2359	2134	2111	1895	1870	1708	1682	1526	1460	1314	1325	1185	1159	1134
48	24	24	2617	2433	2198	2026	1995	1779	1746	1589	1557	1407	1375	1233	1243	1107	1077	1047
50	32	23	4091	3788	3493	3207	2931	2905	2638	2436	2354	2160	2131	1944	1915	1692	1706	1676
50	32	24	3959	3658	3365	3082	2996	2782	2518	2490	2238	2208	2018	1988	1805	1729	1601	1571
54	32	26	4675	4338	4010	3692	3384	3352	3054	2830	2734	2519	2484	2277	2241	1990	2007	1817
54	32	32	-	3524	3206	3112	2811	2576	2489	2266	2183	2148	1939	1905	1707	1632	1641	1456
58	32	28	3571	5020	4659	4308	3968	3715	3600	3355	3047	3006	2777	2556	2515	2243	2262	2058
60	32	32	-	4978	4603	4238	3887	3845	3505	3251	3136	2893	2848	2614	2570	2285	2302	2088
66	32	36	-	-	-	-	4729	4430	4286	3998	3633	3579	3311	3050	2998	2677	2696	2457
66	36	36	-	-	-	-	5392	4972	4834	4432	4129	3995	3705	3422	3372	3029	2979	2723
68	38	28					7398	6940	6491	6053	5733	5314	5007	4860	4562	4271	4220	3936

Table continued next page

Copyright National Electrical Manufacturers Association
Provided by IHS under license with NEMA
No reproduction or networking permitted without license from IHS
Not for Resale

Table 7-2 (Continued)
REEL CAPACITIES IN METERS

Reel Dimensions			Cable Diameter (Inches)														
FL	TR	DR	0.52	0.54	0.56	0.58	0.60	0.62	0.64	0.66	0.68	0.70	0.72	0.74	0.76	0.78	0.80	0.82
72	36	36	-	-	-	-	7577	7054	6545	6360	5989	5511	5159	5094	4751	4318	4251	3934
72	48	36	-	-	-	-	10103	9363	8769	8605	8026	7462	6916	6755	6335	5824	5769	5277
72	36	40	-	-	-	-	-	-	-	-	5505	5034	4682	4616	4276	4114	3791	3725
72	36	48	-	-	-	-	-	-	-	-	-	-	-	-	-	-	3009	2950
78	36	40	-	-	-	-	-	-	-	-	6767	6554	6162	5778	5403	5204	4845	4766
78	48	42	-	-	-	-	-	-	-	-	-	8313	7711	7521	7058	6492	6426	5882
78	36	48	-	-	-	-	-	-	-	-	-	-	-	-	-	-	4069	3725
84T	36	42	-	-	-	-	-	-	-	-	-	6139	5750	5672	5293	4813	4735	4385
84T	45	42	-	-	-	-	-	-	-	-	-	7802	7218	7028	6587	6044	5975	5561
84	42	48	13364	12485	11330	10507	9858	9224	8607	8396	7799	7350	6787	6586	6167	5759	5569	5178
84	54	48	-	-	-	-	-	-	-	-	-	-	-	-	-	-	7952	7312
90T	45	42	-	-	-	-	-	-	-	-	-	9893	9233	8591	8114	7506	7427	6974
90	46	56	-	-	-	-	-	-	-	-	-	8547	7901	7404	7195	6717	6513	6056
90	54	48	-	-	-	-	-	-	-	-	-	-	-	-	-	-	9839	9127
96T	69	42	-	-	-	-	-	-	-	-	-	15528	14690	13868	13063	12831	12045	11279

Table continued next page

Copyright National Electrical Manufacturers Association
Provided by IHS under license with NEMA
No reproduction or networking permitted without license from IHS

Not for Resale

Table 7-2 (Continued)
REEL CAPACITIES IN METERS

Reel Dimensions			Cable Diameter (Inches)														
FL	TR	DR	0.84	0.86	0.88	0.9	0.92	0.94	0.96	0.98	1	1.02	1.04	1.06	1.08	1.1	1.15	1.2
20	12	10	73	55	51	51	52	52	48	48	48	-	-	-	-	-	-	-
24	12	10	124	125	116	117	96	96	89	90	-	-	-	-	-	-	-	-
24	18	10	190	182	184	185	144	145	138	139	-	-	-	-	-	-	-	-
27	18	12	257	205	207	209	199	201	191	156	157	149	150	151	142	143	107	-
30	18	12	349	289	291	294	281	240	229	231	232	220	222	186	176	177	168	-
32	24	14	518	436	422	426	412	354	342	344	332	334	321	270	272	260	251	207
36	18	16	476	456	404	-	388	391	323	325	328	310	313	269	253	255	242	205
36	24	17	588	571	553	485	469	472	455	458	378	380	365	367	369	354	286	290
40	18	18	528	506	454	457	436	440	368	371	373	354	356	311	293	295	280	242
40	24	17	-	730	708	714	691	618	597	601	580	512	492	496	499	415	400	407
42	26	18	933	909	917	799	775	948	758	678	655	660	637	563	542	546	459	444
42	24	24	753	640	619	622	600	522	502	505	485	488	468	398	400	382	367	307
45	28	21	1103	1076	1084	949	923	930	903	810	785	790	765	678	655	659	557	540
48	24	24	1053	1021	989	897	867	872	841	756	727	732	703	624	628	601	505	511
50	32	23	1507	1477	1319	1290	1299	1149	1121	1129	1100	962	968	941	947	818	799	686
50	32	24	1695	1515	1483	1450	1324	1293	1261	1142	1112	1082	1089	943	948	920	792	772
54	32	26	1782	1603	1569	1534	1410	1377	1343	1226	1194	1161	1169	1021	1027	997	868	846
54	32	32	1567	1532	1344	1311	1318	1285	1112	1117	1086	1055	1060	903	907	878	854	718
58	32	28	2220	2175	1964	1920	1934	1734	1691	1703	1514	1473	1482	1305	1313	1274	1119	1091
60	32	32	2250	2027	1982	1936	1783	1740	1695	1551	1509	1467	1475	1292	1299	1259	1098	1069
66	32	36	2647	2590	2344	2289	2303	2069	2016	2027	1807	1762	1765	1559	1567	1519	1337	1300
66	36	36	2941	2886	2620	2636	2582	2328	2276	2224	2048	1998	1948	1782	1735	1744	1491	1457
68	38	28	3574	3522	3340	3288	3030	2978	2731	2679	2701	2463	2412	2253	2203	2152	1959	1772
72	36	36	3867	3563	3496	3292	3227	3161	2882	2817	2630	2569	2506	2328	2269	2282	1989	1777

Table continued next page

Copyright National Electrical Manufacturers Association
Provided by IHS under license with NEMA
No reproduction or networking permitted without license from IHS
Not for Resale

Table 7-2 (Continued)
REEL CAPACITIES IN METERS

Reel Dimensions			Cable Diameter Inches)															
FL	TR	DR	0.84	0.86	0.88	0.90	0.92	0.94	0.96	0.98	1.00	1.02	1.04	1.06	1.08	1.10	1.15	1.20
72	48	36	5221	4841	4693	4331	4274	4215	3870	3812	3481	3425	3368	3129	3074	3018	2674	2412
72	36	40	3416	3351	3056	3074	3011	2729	2668	2606	2414	2356	2296	2115	2059	2069	1783	1574
72	36	48	2649	2593	2538	2318	2266	2213	2160	1901	1908	1858	1808	1621	1576	1581	1317	1281
78	36	40	4420	4341	4008	4036	3712	3635	3327	3252	3049	2977	2904	2711	2642	2656	2327	2093
78	48	42	5815	5396	5227	4829	4761	4693	4313	4245	3882	3817	3751	3489	3426	3361	2981	2691
78	36	48	3653	3581	3256	3272	3202	2893	2826	2758	2546	2482	2417	2218	2157	2166	1856	1808
84T	36	42	4307	3971	3894	3670	3595	3520	3211	3138	2933	2862	2791	2596	2528	2541	2216	1983
84T	45	42	5384	4989	4919	4539	4470	4400	4037	3969	3623	3556	3576	3245	3181	3115	2828	2478
84	42	48	5102	4725	4649	4287	4213	4138	3794	3722	3395	3412	3341	3029	2962	2975	2671	2359
84	54	48	7239	6625	6551	6072	5891	5817	5363	5289	4853	4782	4710	4297	4227	4157	3708	3282
84T	45	56	-	-	-	-	-	2843	2500	2451	2401	2350	2357	2044	1998	1952	1913	1591
90T	45	42	6758	6322	5899	5817	5407	5326	4931	4850	4768	4392	4419	4054	3976	3897	3584	3187
90	46	56	5973	5423	5342	4923	4844	4443	4366	4288	3910	3835	3852	3490	3419	3347	3027	2645
90	54	48	9043	8354	7826	7741	7099	7013	6522	6437	6351	5880	5795	5343	5260	5175	4680	4198
90T	45	56	-	-	-	-	-	3766	3697	3322	3257	3190	3202	2852	2790	2727	2416	2303
90	48	56	-	-	-	-	-	5069	4986	4901	4413	4393	4311	4002	3925	3847	3397	3053
90	54	56	-	-	-	-	-	5702	5622	5541	5070	4992	4913	4468	4392	4316	3832	3374
90T	54	56	-	-	-	-	-	4519	4453	4017	3954	3891	3827	3422	3362	3301	2873	2763
90	46	44	8844	8204	7740	7643	7192	6752	6655	6228	6130	5718	5758	5354	5258	4871	4540	4100
96T	60	42	10534	10462	9737	9181	8928	8420	8341	7816	7736	7097	7015	6528	6446	5976	5460	5315
96	54	56	-	-	-	-	-	7397	6867	6772	6676	6169	6075	5589	5648	5405	4868	4354
96T	60	56	-	-	-	-	-	6336	6258	6180	5666	5491	5414	4933	4859	4785	4268	3776
96	66	60	-	-	-	-	-	-	-	-	7004	6920	6836	6270	6188	6106	5399	4826
102	45	50	-	-	-	-	-	-	-	-	-	-	-	-	-	5165	4810	4338
108T	74	56	-	-	-	-	-	12001	11908	11032	10938	10094	9999	9331	9237	8455	8288	7468
112	72	72	-	-	-	-	-	-	-	-	-	-	-	-	-	-	7182	-

Table continued next page

Copyright National Electrical Manufacturers Association
Provided by IHS under license with NEMA
No reproduction or networking permitted without license from IHS
Not for Resale

Table 7-2 (Continued)
REEL CAPACITIES IN METERS

Reel Dimensions			Cable Diameter (Inches)															
FL	TR	DR	1.25	1.3	1.35	1.4	1.45	1.5	1.55	1.6	1.65	1.7	1.75	1.8	1.85	1.9	1.95	2
32	24	14	182	174	130	-	-	-	-	-	-	-	-	-	-	-	-	-
36	18	16	176	179	136	138	128	101	102	-	-	-	-	-	-	-	-	-
36	24	17	208	198	189	191	143	144	136	137	129	-	-	-	-	-	-	-
40	18	18	228	194	181	183	138	140	-	-	-	-	-	-	-	-	-	-
40	24	17	304	292	232	235	223	226	173	175	164	-	-	-	-	-	-	-
42	26	18	391	338	325	259	262	250	237	195	183	185	187	-	-	-	-	-
42	24	24	268	255	194	195	185	186	175	134	126	126	127	118	119	84	78	78
45	28	21	478	394	379	322	308	294	297	230	233	220	222	165	166	168	157	158
48	24	24	448	368	350	297	282	284	268	222	208	209	211	156	157	158	146	147
50	32	23	668	564	546	528	434	439	422	357	342	326	329	255	257	259	245	247
50	32	24	598	580	561	464	447	452	364	368	351	274	276	262	265	267	199	200
54	32	26	726	704	593	473	552	478	458	463	372	354	357	339	280	282	267	269
54	32	32	636	522	504	484	385	388	371	374	286	272	273	259	260	262	189	190
58	32	28	865	839	717	692	580	586	563	487	466	444	376	357	360	363	343	283
60	32	32	840	814	688	663	638	554	531	536	432	411	414	393	326	328	309	312
66	32	36	1,033	1,001	857	826	695	701	672	584	557	531	452	429	432	435	410	340
66	36	36	1,163	1,131	974	944	799	771	778	646	620	625	505	509	486	489	465	386
68	38	28	1,536	1,504	1,335	1,175	1,143	1,037	1,006	974	834	844	712	720	691	698	578	583
72	36	36	1,587	1,404	-	1,194	1,157	997	1,008	858	824	832	848	701	670	579	551	555
72	48	36	2,116	1,890	-	1,592	1,559	1,361	1,329	1,144	1,113	1,082	952	923	893	773	746	719
72	36	40	1,402	1,223	-	1,020	987	952	841	810	777	675	646	651	621	529	503	506
72	36	48	1,138	960	930	768	740	712	716	574	550	552	527	429	408	409	388	390

Table continued next page

Copyright National Electrical Manufacturers Association
Provided by IHS under license with NEMA
No reproduction or networking permitted without license from IHS
Not for Resale

Table 7-2 (Continued)
REEL CAPACITIES IN METERS

Reel Dimensions			Cable Diameter (Inches)															
FL	TR	DR	1.25	1.30	1.35	1.40	1.45	1.50	1.55	1.60	1.65	1.70	1.75	1.80	1.85	1.90	1.95	2.00
78	36	40	1708	1664	1469	1426	1245	1203	1085	1045	1005	896	858	866	721	727	692	599
78	48	42	2358	2108	1813	1776	1737	1519	1481	1278	1517	1206	1061	1030	996	864	834	803
78	46	48	1447	1405	1213	1174	998	961	968	806	773	778	633	636	606	610	579	483
84T	36	42	1768	1566	1374	1332	1289	1114	1124	958	920	928	777	478	747	648	617	621
84	42	48	2239	1994	1761	1715	1669	1454	1409	1211	1220	1178	995	1002	963	837	802	767
84T	45	42	2227	1927	1704	1665	1625	1417	1379	1187	1150	1160	982	948	955	792	762	767
84	54	48	2960	2591	2306	2205	2163	1900	1859	1614	1575	1536	1311	1275	1237	1076	1042	1009
84T	45	56	1422	1131	1125	1094	892	864	838	810	637	639	616	592	594	571	425	426
90T	45	42	2648	2318	2272	2031	1985	1758	1712	1500	1456	1311	1270	1227	1093	1054	987	1022
90	54	48	3507	3105	3058	2679	2631	2346	2298	2030	1983	1732	1687	1642	1413	1423	1380	1337
90T	45	56	1841	1745	1504	1464	1424	1205	1168	1131	935	940	906	873	733	704	675	678
90	46	56	2520	2238	2188	1922	1874	1626	1581	1534	1309	1267	1223	1068	1029	1035	995	813
90	48	56	2668	2373	2256	1984	1936	1682	1636	1591	1359	1317	1325	1112	1073	1079	1040	851
90	54	56	3038	2645	2598	2232	2186	1906	1862	1818	1561	1519	1478	1245	1207	1214	1175	967
90T	54	56	2220	2127	1843	1757	1719	1463	1428	1392	1159	1128	1095	1063	860	864	835	807
96	46	44	3677	3619	3318	3026	2744	2685	2416	2356	2102	2042	1804	1822	1595	1610	1396	1344
96T	60	42	4405	3967	3635	3231	3189	2882	2761	2474	2429	2156	2111	1856	1812	1828	1588	1546
96	54	56	3622	3479	3139	2737	2683	2380	2328	2275	1993	1942	1680	1633	1585	1595	1357	1312
96T	60	56	3335	2916	2871	2480	2436	2130	2031	1989	1712	1672	1631	1379	1342	1349	1311	1084
96	66	60	4280	3787	3320	3200	3151	2723	2675	2340	2295	2185	1884	1841	1797	1568	1528	1488
102	45	50	4003	3816	3496	3187	2889	2820	2536	2468	2200	2222	1965	1900	1739	1677	1453	1464
108	46	60	4257	3899	3552	3218	3143	2825	2752	2452	2381	2101	2032	1851	1786	1799	1553	1492
108T	74	56	6223	5640	5080	4933	4404	4260	3851	3712	3328	3274	2909	2858	2805	2463	2413	2362
112	72	72	5805	5634	5025	4446	4383	3809	3778	3629	3212	3152	2758	2702	2573	2587	2229	2230
120	73	80	-	-	5909	5248	5180	4556	4396	4327	3755	3690	3238	3177	3114	3051	2638	2580
128	92	90	-	-	-	-	-	5948	5220	5058	4895	4320	4169	4102	3572	3510	3371	2888
142	82	96	-	-	-	-	-	-	-	6289	5674	5461	4885	4798	4709	4169	3984	3899

Table continued next page

Copyright National Electrical Manufacturers Association
Provided by IHS under license with NEMA
No reproduction or networking permitted without license from IHS
Not for Resale

Table 7-2 (Continued)
REEL CAPACITIES IN METERS

Reel Dimensions			Cable Diameter (Inches)															
FL	TR	DR	2.05	2.1	2.15	2.2	2.25	2.3	2.35	2.4	2.25	2.5	1.55	2.6	2.65	2.7	2.75	2.8
42	24	24	78	71	72	72	72	65	41	-	-	-	-	-	-	-	-	-
45	28	21	146	-	-	-	-	-	-	-	-	-	-	-	-	-	-	-
48	24	24	147	101	102	102	103	93	94	-	-	-	-	-	-	-	-	-
50	32	24	187	188	190	178	179	135	125	-	-	-	-	-	-	-	-	-
54	32	26	253	201	202	189	190	-	-	-	-	-	-	-	-	-	-	-
54	32	32	177	178	177	166	167	119	110	111	111	112	103	103	103	104	104	95
58	32	28	264	266	268	251	199	201	186	187	188	190	175	176	133	133	134	-
60	32	32	291	233	234	219	220	221	205	206	157	158	145	146	147	147	148	135
66	32	36	318	319	322	300	241	242	224	225	227	228	210	211	161	161	162	148
66	36	36	363	365	344	346	278	260	262	263	245	247	248	249	175	176	177	178
68	38	28	556	477	453	457	461	436	366	-	-	-	-	-	-	-	-	-
72	36	36	524	444	419	422	424	399	401	331	309	311	312	314	292	232	233	235
72	48	36	720	582	586	562	566	541	545	449	428	430	409	411	413	304	311	313
72	36	40	476	396	373	375	377	354	356	285	266	267	268	270	250	251	252	193
72	36	48	366	284	267	268	269	252	253	254	236	237	171	171	158	159	159	160
78	36	40	564	568	536	540	458	430	432	435	406	335	337	339	315	316	318	319
78	48	42	804	652	656	629	632	604	608	503	479	482	457	460	462	348	349	351
78	36	48	455	457	430	432	349	327	328	330	307	308	310	311	221	222	222	223
84T	36	42	585	497	469	472	474	445	448	371	346	348	350	352	326	261	262	263
84	42	48	771	658	627	630	598	601	569	473	475	447	449	451	453	340	341	342
84T	45	42	731	622	594	597	601	572	576	450	453	455	430	433	435	326	328	329
84	54	48	1009	826	795	800	769	773	742	616	590	592	595	568	571	458	436	438

Table continued next page

Copyright National Electrical Manufacturers Association
Provided by IHS under license with NEMA
No reproduction or networking permitted without license from IHS
Not for Resale

Table 7-2 (Continued)
REEL CAPACITIES IN METERS

Reel Dimensions			Cable Diameter (Inches)															
FL	TR	DR	2.05	2.1	2.15	2.2	2.25	2.3	2.35	2.4	2.45	2.5	2.55	2.6	2.65	2.7	2.75	2.8
84T	45	56	407	408	389	390	390	269	270	256	256	257	242	243	243	229	229	230
90T	45	42	855	861	824	712	717	683	688	653	554	557	527	530	533	502	414	416
90	46	56	817	782	786	750	626	629	598	601	570	572	462	436	438	439	413	415
90	54	48	1176	1137	1096	950	914	920	883	888	718	722	725	693	696	700	549	551
90T	45	56	648	526	502	504	505	480	482	457	354	355	335	336	337	317	318	319
90	48	56	856	821	824	789	659	628	631	634	603	605	462	463	465	439	441	442
90	54	56	972	938	903	907	725	728	698	700	670	672	543	518	520	522	496	497
90T	54	56	810	632	607	610	585	587	563	564	417	418	419	399	401	402	382	383
96	46	44	1355	1158	1167	1118	1126	999	953	960	913	798	804	761	766	771	622	625
96T	60	42	1503	1334	1295	1255	1264	1063	1070	1033	1040	1001	862	828	833	838	803	677
96	54	56	1320	1102	1062	1068	1027	1032	840	844	807	811	815	778	647	649	618	620
96T	60	56	1050	1055	1021	986	824	794	797	767	770	740	598	572	575	576	551	553
96	66	60	1447	1198	1203	1167	1131	1135	1098	917	885	888	856	860	827	668	641	643
102	45	50	1405	1263	1209	1218	1226	1032	1039	988	994	872	825	830	835	788	679	683
108	46	60	1501	1276	1284	1227	1234	1087	1036	1041	989	994	862	815	819	823	775	629
108T	74	56	2048	1997	1951	1665	1675	1630	1585	1593	1334	1341	1299	1306	1264	1074	1037	1042
112	72	72	2122	1797	1748	1756	1706	1656	1419	1376	1331	1337	1292	1297	1042	1046	1007	1011
120	78	80	2521	2144	2091	2037	1983	1991	1656	1608	1613	1565	1570	1522	1229	1233	1191	1195
128	92	90	2831	2773	2715	2657	2228	2235	2183	2131	2078	1697	1701	1656	1610	1615	1568	1572
142	82	96	3501	3423	3344	2886	2814	2741	2751	2678	2268	2276	2209	2143	2150	1782	1787	1729

Table continued next page

Copyright National Electrical Manufacturers Association
Provided by IHS under license with NEMA
No reproduction or networking permitted without license from IHS

Table 7-2 (Continued)
REEL CAPACITIES IN METERS

Reel Dimensions			Cable Diameter (Inches)															
FL	TR	DR	2.85	2.9	2.95	3	3.1	3.2	3.3	3.4	3.5	3.6	3.7	3.8	3.9	4	4.1	4.2
54	32	32	95	59	59	60	54	-	-	-	-	-	-	-	-	-	-	-
60	32	32	136	136	96	96	87	-	-	-	-	-	-	-	-	-	-	-
66	32	36	148	149	150	150	136	96	97	87	87	-	-	-	-	-	-	-
66	36	36	178	164	165	165	167	107	108	108	98	-	-	-	-	-	-	-
72	36	36	236	217	218	219	221	153	154	155	141	-	-	-	-	-	-	-
72	48	36	314	296	297	299	282	214	200	202	203	-	-	-	-	-	-	-
72	36	40	193	178	178	179	181	165	167	118	107	108	108	109	97	-	-	-
72	36	48	160	147	148	148	149	86	86	86	78	78	78	79	70	70	71	33
78	36	40	255	235	235	237	238	219	221	168	152	153	154	155	139	-	-	-
78	48	42	352	332	333	335	315	241	225	226	228	212	213	151	139	140	140	-
78	36	48	224	206	207	207	208	136	136	137	124	125	125	126	70	70	71	71
84T	36	42	264	243	244	245	247	172	173	174	158	159	160	113	101	102	102	-
84	42	48	344	320	322	323	300	230	232	214	215	217	198	141	142	128	-	-
84T	45	42	330	310	311	312	292	223	208	209	210	194	195	138	126	127	128	-
84	54	48	439	416	418	420	398	305	288	290	272	274	256	182	183	169	170	171
84T	45	56	229	136	137	137	128	128	118	119	119	109	110	52	47	47	47	48
90T	45	42	416	390	392	394	369	295	274	277	279	258	195	197	180	181	182	-
90	46	56	416	418	391	301	303	283	284	264	266	190	175	176	177	161	162	163
90	54	48	550	522	524	527	500	401	379	382	359	362	256	258	259	241	242	243
90T	45	56	318	298	215	215	200	201	187	188	188	173	110	110	101	101	101	101
90	54	56	496	470	472	363	344	346	326	328	308	221	206	207	208	192	193	194

Table continued next page

Not for Resale

Copyright National Electrical Manufacturers Association
Provided by IHS under license with NEMA
No reproduction or networking permitted without license from IHS
Not for Resale

Table 7-2 (Continued)
REEL CAPACITIES IN METERS

Reel Dimensions			Cable Diameter (Inches)															
FL	TR	DR	2.85	2.9	2.95	3	3.1	3.2	3.3	3.4	3.5	3.6	3.7	3.8	3.9	4	4.1	4.2
90T	54	56	382	362	260	261	247	248	233	234	220	221	130	130	131	121	121	122
96	46	44	629	633	594	597	505	474	479	364	368	371	343	-	-	-	-	-
96T	60	42	677	646	650	654	626	487	492	467	472	352	354	357	336	338	317	-
96	54	56	619	587	589	474	449	452	426	429	308	309	289	290	292	271	272	194
96T	60	56	552	526	528	406	387	368	370	350	352	236	237	238	223	225	209	210
96	66	60	642	615	616	589	593	435	437	416	395	397	376	270	271	255	256	240
102	45	50	686	644	647	651	513	518	482	399	402	371	374	377	273	275	277	279
108	46	60	662	664	623	625	631	487	491	456	459	369	341	343	345	315	317	243
108T	74	56	999	1003	963	970	771	742	748	718	576	551	554	528	532	505	386	365
112	72	72	1008	969	972	752	757	726	695	699	514	516	492	494	468	470	445	320
120	78	80	1191	1148	1152	897	864	868	835	801	622	595	597	569	572	544	546	372
128	92	90	1232	1235	1196	1199	1163	1127	1090	816	787	789	759	762	732	507	508	485
142	82	96	1723	1665	1669	1610	1352	1305	1257	1208	983	942	946	905	863	867	673	639

Table continued next page

Copyright National Electrical Manufacturers Association
Provided by IHS under license with NEMA
No reproduction or networking permitted without license from IHS
Not for Resale

Table 7-2 (Continued)
REEL CAPACITIES IN METERS

Reel Dimensions			Cable Diameter (Inches)															
FL	TR	DR	4.3	4.4	4.5	4.6	4.7	4.8	4.9	5	5.25	5.5	5.75	6	6.25	6.5	6.75	7
72	36	48	29	29	29	29	29	-	-	-	-	-	-	-	-	-	-	-
78	36	48	62	62	63	63	63	-	-	-	-	-	-	-	-	-	-	-
78	48	42	89	89	90	81	81	-	-	-	-	-	-	-	-	-	-	-
84	54	48	158	158	159	160	90	-	-	-	-	-	-	-	-	-	-	-
84T	45	56	43	43	43	43	43	38	38	38	38	34	-	-	-	-	-	-
90	54	48	225	158	159	160	146	-	-	-	-	-	-	-	-	-	-	-
90T	45	56	92	92	92	92	92	82	38	38	38	34	-	-	-	-	-	-
90	48	56	162	163	102	92	92	93	93	93	84	84	-	-	-	-	-	-
90	54	56	178	179	112	113	103	103	103	104	94	95	-	-	-	-	-	-
90T	54	56	112	112	112	113	103	103	48	48	43	44	-	-	-	-	-	-
96	54	56	178	179	180	181	165	166	166	167	94	95	-	-	-	-	-	-
96T	60	56	211	195	123	123	123	114	114	114	105	105	-	-	-	-	-	-
96	66	60	241	242	225	226	142	142	132	132	122	123	112	-	-	-	-	-
108	46	60	244	220	222	223	224	225	201	202	-	-	-	-	-	-	-	-
108T	74	56	367	346	348	350	328	232	233	234	219	205	-	-	-	-	-	-
112	72	72	301	302	303	283	284	285	266	267	169	157	145	145	133	134	135	56
120	78	80	373	352	353	355	333	334	335	314	200	186	173	174	160	161	147	68
128	92	90	487	464	465	466	443	444	421	268	254	239	240	225	210	211	92	92
142	82	96	642	608	610	576	578	418	392	393	370	372	348	204	205	189	190	191