9009279 0002775 965

STANDARDS PUBLICATION/NO. WC 26-1984

nema

Wire and Cable Packaging

NEMA

NATIONAL ELECTRICAL MANUFACTURERS ASSOCIATION ■ 2101 L STREET, N.W., WASHINGTON, D.C. 20037

Copyright National Electrical Manufacturers Association
Provided by IHS under license with NEMA
No reproduction or networking permitted without license from IHS
Not for Resale

TABLE OF CONTENTS

		Page
	FOREWORD	i
	SCOPE	i
Section 1	CONSTRUCTION OF PACKAGE TYPES	1
	Returnable Reels	1
	Gas-Tight Returnable Steel Shipping Reels	1
	Steel Fluted Reel	1
	Class I—General Purpose Applications	1
	Class II—Heavy-Duty Applications	1
	Wood Reels	1
	Nonreturnable Reels	1
	Steel Reels	1
	Wood Reels	1
Section 2	CAPACITIES OF PACKAGE TYPES	9
	Calculations	9
	Capacity Tables	9
Section 3	CABLE BENDING	16
Section 4	PROTECTIVE COVERINGS	17
Section 5	MARKING AND IDENTIFICATION	18

© 1984 by National Electrical Manufacturers Association

Copyright National Electrical Manufacturers Association
Provided by IHS under license with NEMA
No reproduction or networking permitted without license from IHS
Not for Resale

9009279 0002777 738

FOREWORD

The purpose of this Standards Publication is to provide practical information concerning the packaging of wire and cable. There are, however, scores of different sizes and types of wire and cable products; and the determination of the most desirable standard packages for each, from both the manufacturers' and users' point of view, requires careful consideration of the many variables.

The issuance or existence of these standards does not in any respect prevent or restrict any member or nonmember of NEMA from supplying customers with reels or packages not in conformance with these standards.

User input has been considered throughout the development of this Standards Publication.

These standards have been developed by the Wire and Cable Division of NEMA which periodically reviews them for any revisions necessary to keep them uptodate with advancing technology. Comments or proposed revisions are welcomed and should be submitted to:

Manager, Engineering Department
National Electrical Manufacturers Association
2101 L Street, N.W.
Washington, D.C. 20037

SCOPE

This standard covers uniform requirements for packaging electrical wire and cable and replaces the following NEMA standards:

PC 1–1973	*Gas Tight Returnable Steel Shipping Reels for Pipe-type Cable*
WC 6–1980	*Minimum Drum Diameters of Reels for Cables*
WC 20–1976	*Dimensions and Capacities of Returnable Reels for Wires and Cables*
WC 21–1978	*Nonreturnable Reels for Wires and Cables*
WC 22–1979	*Construction of Steel Fluted Returnable Reels for Wires and Cables*
WC 25–1975	*Protective Coverings for Wire and Cable Reels*

Copyright National Electrical Manufacturers Association
Provided by IHS under license with NEMA
No reproduction or networking permitted without license from IHS
Not for Resale

9009279 0002778 674

WIRE AND CABLE PACKAGING STANDARD

Section 1

CONSTRUCTION OF PACKAGE TYPES

1.1 RETURNABLE REELS

Returnable reels are intended to provide a package for the delivery, storage, and dispensing of the product and are intended to be returned to the cable manufacturer.

1.1.1 Gas-Tight Returnable Steel Shipping Reels

A suggested standard for future design of gas-tight returnable steel shipping reels for pipe-type cable is given in Table 1-1.

Suggested Standard for Future Design 1-11-1984.

1.1.2 Steel Fluted Reels

Steel fluted reels utilize a fluted or corrugated flange design to develop a strong and durable package. Reels designated RM are constructed with flat-bar tires (see Figure 1-1). Reels designated RMT utilize I-beam tires (see Figure 1-2). RM and RMT steel fluted reels are classified as follows:

1. Class I reels shall be for general-purpose applications. Construction details and load limitations shall be in accordance with Table 1-2.
2. Class II reels shall be for heavy-duty applications. Construction details and load limitations shall be in accordance with Table 1-3.

NEMA Standard 1-11-1984.

1.1.3 Wood Reels

Construction of returnable wood reels shall be specified by the wire and cable manufacturer. General dimensions shall be in accordance with Table 1-4.

NEMA Standard 1-11-1984.

1.2 NONRETURNABLE REELS

Nonreturnable reels provide a package for the delivery, storage, and dispensing of the product and are not intended to be returned.

Small nonreturnable packages are generally referred to as spools and are constructed of a variety of materials.

1.2.1 Steel Reels

Although steel reels are not generally used in nonreturnable applications, some may be used to suit special circumstances and for export.

Construction of metal nonreturnable reels is presently specified by the wire and cable manufacturer.

1.2.2 Wood Reels

Construction details of the standard sizes of wood nonreturnable reels shall be in accordance with Tables 1-5, 1-6, and 1-7.

NEMA Standard 1-11-1984.

Table 1-1

GAS-TIGHT RETURNABLE STEEL SHIPPING REELS FOR PIPE-TYPE CABLE

Flange Diameter, Inches	Inside Traverse, Inches	Drum Diameter, Inches	Maximum Overall Width, Inches	Arbor, Inches
90	48	56	63	5¼ ± 1/16
96	66	60	81	5¼ ± 1/16
112	72	72	87	5¼ ± 1/16
120	78	80	93	5¼ ± 1/16
128	92	90	107	6¼ ± 1/16
142	82	96	98	6¼ ± 1/16

Copyright National Electrical Manufacturers Association
Provided by IHS under license with NEMA
No reproduction or networking permitted without license from IHS
Not for Resale

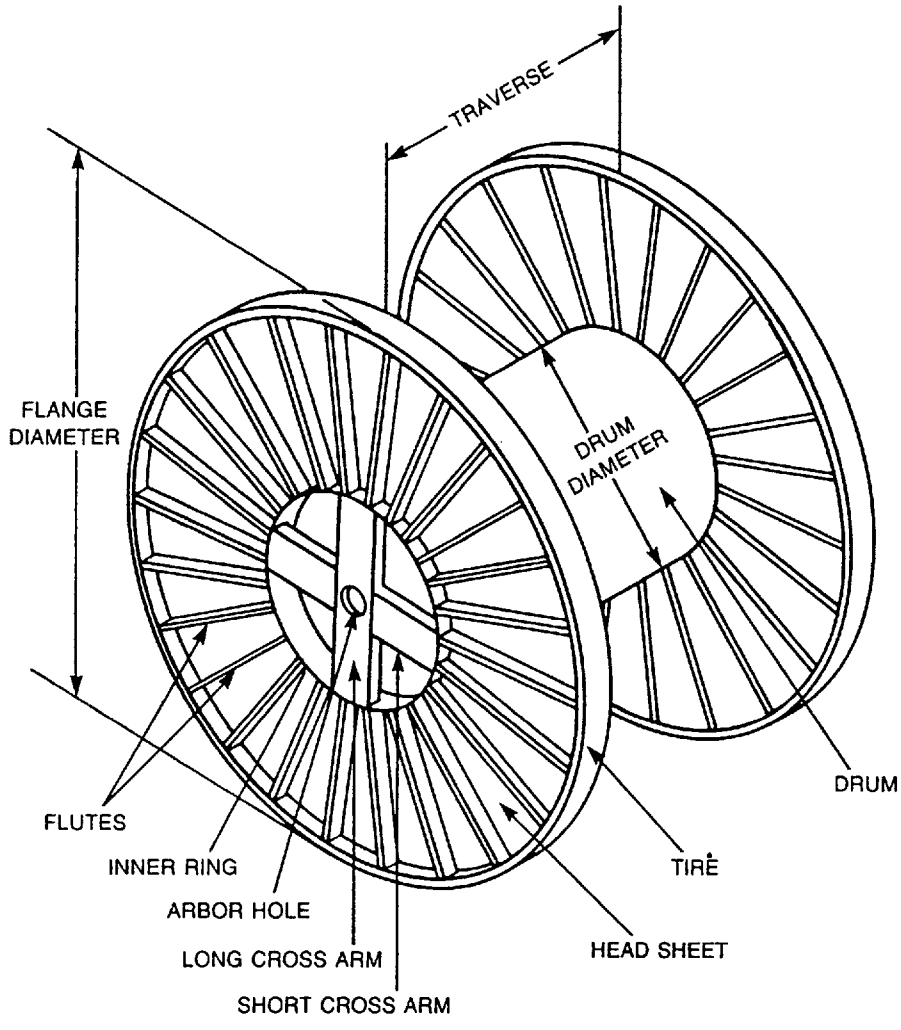

Figure 1-1
FLAT BAR TIRE FLUTED STEEL REEL—TYPE RM

Copyright National Electrical Manufacturers Association
Provided by IHS under license with NEMA
No reproduction or networking permitted without license from IHS

Not for Resale

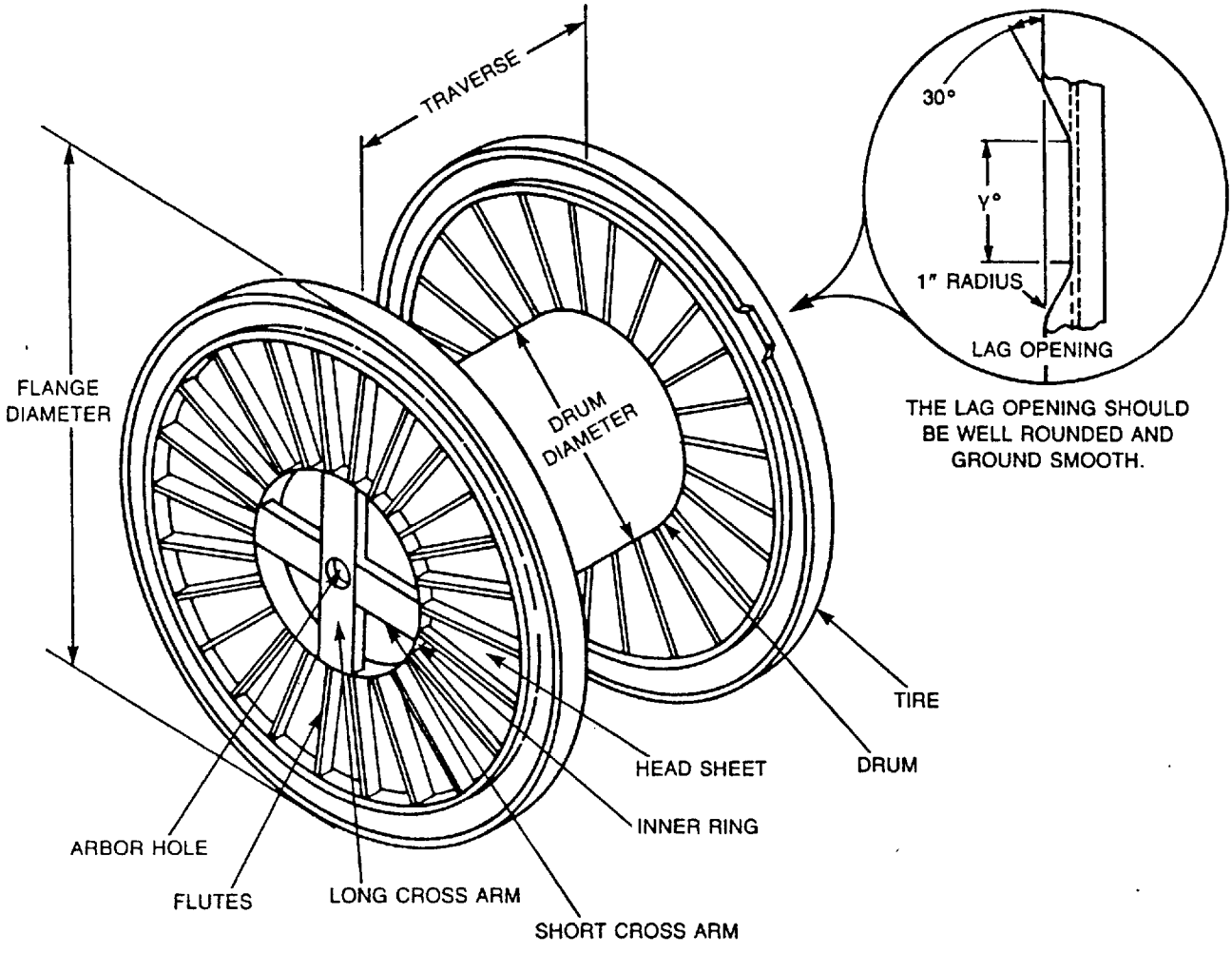

Figure 1-2
I-BEAM TIRE FLUTED STEEL REEL—TYPE RMT

Copyright National Electrical Manufacturers Association
Provided by IHS under license with NEMA
No reproduction or networking permitted without license from IHS

Not for Resale

Copyright National Electrical Manufacturers Association
Provided by IHS under license with NEMA
No reproduction or networking permitted without license from IHS
Not for Resale

9009279 0002781 169

Table 1-2

CONSTRUCTION OF STEEL FLUTED RETURNABLE REELS FOR WIRES AND CABLES – CLASS I

(See Figures 1-1 and 1-2)

Type‡	Flange Diameter Inches	Traverse Width, Inches	Drum Diameter Inches	Rated Weight Capacity, Pounds**	Arbor Hole Diameter, Inches	Maximum Overall Width Inches	Maximum Number of Flutes per Head	Tire Size Inches	Cross Arms U.S.S. Gauge	Cross Arms Long, Inches	Cross Arms Short, Inches	Drum U.S.S. Gauge	Inner Ring Dimensions, Inches	(Flange) Headsheet U.S.S. Gauge
RM	42	24	24	1,956	3-3¼	33	24	2 × 5/16	8	5 × 2	4 × 2	12	3¾ × 3/16	16
RM	48	24	24	3,072	3-3¼	33	24	2 × 5/16	8	5 × 2	4 × 2	12	3¾ × 3/16	16
RM	54	32	32	4,464	3-3¼	41	30	2 × 5/16	8	5 × 2	4 × 2	12	3½ × 3/16	16
RM	60	32	32	6,360	3-3¼	41	30	2 × 5/16	8	5 × 2	4 × 2	12	3¾ × 3/16	16
RM	66	32	36	7,680	3-3¼	41	32	2½ × ½	8	6 × 2	5 × 2	12	3¾ × 3/16	16
RM	72	36	40	10,260	3-3¼	45	40	2½ × ½	8	6 × 2	5 × 2	12	3¾ × ¼	16
RM	72	36	48	7,872	3-3¼	45	40	2½ × ½	8	6 × 2	5 × 2	12	3½ × ¼	16
RM	78	36	48	10,752	3-3¼	45	40	2½ × 5/8†	8	6 × 2	5 × 2	12	3¾ × ¼	16
RMT	84	36	42	13,608	5-5¼	45	40	7.5 lb/ft 3 I-beam	8	7⅞ × 2	6 × 2	10	4 × ¼	16
RMT	84	45	42	17,004	5-5¼	55	40	7.5 lb/ft 3 I-beam	8	7⅞ × 2	6 × 2	10	4 × ¼	16
RMT	84	45	56	11,196	5-5¼	55	40	7.5 lb/ft 3 I-beam	8	7⅞ × 2	6 × 2	10	4 × ¼	16
RMT	90	45	42	21,036	5-5¼	55	40	7.5 lb/ft 3 I-beam	8	7⅞ × 2	6 × 2	10	4¼ × ¼	16
RMT	90	45	56	15,216	5-5¼	55	40	7.5 lb/ft 3 I-beam	8	7⅞ × 2	6 × 2	10	4¼ × ¼	16
RMT	90	54	56	18,252	5-5¼	64	40	7.5 lb/ft 3 I-beam	8	7⅞ × 2	6 × 2	8	4¼ × ¼	16
RMT	96	60	42	26,000	5-4¼	71	40	7.5 lb/ft 3 I-beam	8	7⅞ × 3	6 × 3	8	4½ × 5/16	14
RMT	96	60	56	26,000	5-5¼	71	40	7.5 lb/ft 3 I-beam	8	7⅞ × 3	6 × 3	8	4¼ × 5/16	14
RMT*	108	74	56	30,000	5-5¼	85	40	7.5 lb/ft 3 I-beam	8	7⅞ × 3	6 × 3	8	4½ × 5/16	14

* Generally used for aluminum wire and cable.
** This column has been approved as Authorized Engineering Information 1-11-1984.
† Alternate size is 3 × ½ inches.
‡ RM = Flat bar tire.
RMT = I-Beam tire.
NOTE—Tie holes, if necessary, shall be in the flat portion of the head sheet. There will be no holes in the flute itself.

WELDING REQUIREMENTS FOR CLASS I REELS:

- Head sheet to tire — at all radii of flute
- Head sheet to inner ring — at all radii of flute
- Drum to inner ring — intermittent weld
- Cross arm to cross arm — continuous weld
- Cross arm to inner ring — continuous weld
- Cross arm to hub — continuous weld
- Back-up plate to hub and cross arm — continuous weld
- Port frame — continuous weld

All welds shall reflect good welding practice with proper penetration.

Copyright National Electrical Manufacturers Association
Provided by IHS under license with NEMA
No reproduction or networking permitted without license from IHS

Not for Resale

9009279 0002782 0T5

Table 1-3

CONSTRUCTION OF STEEL FLUTED RETURNABLE REELS FOR WIRES AND CABLES–CLASS II
(See Figures 1-1 and 1-2)

Type‡	Flange Diameter Inches	Traverse Width, Inches	Drum Diameter Inches	Rated Weight Capacity, Pounds**	Arbor Hole Diameter, Inches	Maximum Overall Width Inches	Maximum Number of Flutes per Head	Tire Size Inches	Cross Arms U.S.S. Gauge	Cross Arms Long, Inches	Cross Arms Short, Inches	Drum U.S.S. Gauge	Inner Ring Dimensions, Inches	(Flange) Headsheet U.S.S. Gauge
RM	42	24	24	3,260	3-3¼	33	24	2 × ½	8	5 × 2	4 × 2	12	3¾ × 3/16	16
RM	48	24	24	5,120	3-3¼	33	24	2 × ½	8	5 × 2	4 × 2	12	3¾ × 3/16	16
RM	54	32	32	7,440	3-3¼	41	30	2 × ½	8	5 × 2	4 × 2	12	3½ × 3/16	16
RM	60	32	32	10,600	3-3¼	41	30	2 × ½	8	5 × 2	4 × 2	12	3¾ × 3/16	16
RM	66	32	36	12,800	3-3¼	41	32	2½ × ½	8	6 × 2	5 × 2	10	3¾ × 3/16	16
RM	72	36	40	17,100	3-3¼	45	40	2½ × ⅝*	8	6 × 2	5 × 2	10	3¾ × ¼	16
RM	72	36	48	13,120	3-3¼	45	40	2½ × ⅝*	8	6 × 2	5 × 2	10	3½ × ¼	16
RM	78	36	48	17,920	3-3¼	45	40	2½ × ¾†	8	6 × 2	5 × 2	10	3¾ × ¼	14
RMT	84	36	42	22,680	5-5¼	45	40	7.5 lb/ft 3 I-beam	8	7⅞ × 3	6 × 3	10	4 × ¼	14
RMT	84	45	42	28,340	5-5¼	55	40	7.5 lb/ft 3 I-beam	8	7⅞ × 3	6 × 3	8	4 × ¼	14
RMT	84	45	56	18,660	5-5¼	55	40	7.5 lb/ft 3 I-beam	8	7⅞ × 3	6 × 3	8	4 × ¼	14
RMT	90	45	42	30,000	5-5¼	55	40	7.5 lb/ft 3 I-beam	8	7⅞ × 3	6 × 3	8	4¼ × ¼	14
RMT	90	45	56	30,000	5-5¼	55	40	7.5 lb/ft 3 I-beam	8	7⅞ × 3	6 × 3	8	4¼ × ¼	14
RMT	90	54	56	30,000	5-5¼	64	40	7.5 lb/ft 3 I-beam	8	7⅞ × 3	7⅞ × 3	7	4¼ × ¼	14
RMT	96	60	42	40,000	5-4¼	71	40	7.5 lb/ft 3 I-beam	7	7⅞ × 3	7⅞ × 3***	7	4½ × 5/16	12
RMT	96	60	56	40,000	5-5¼	71	40	7.5 lb/ft 3 I-beam	7	7⅞ × 3	7⅞ × 3***	7	4¼ × 5/16	12

* Alternate size is 3 × ½ inches.
** This column has been approved as Authorized Engineering Information 1-11-1984.
*** For added stability, two reinforcing angles, each 2″ × 3″ × ¼″, may be welded 180 degrees apart at the junction of the short and long cross arms and spanning the traverse of the reel.
† Alternate size is 3 × ⅝ inches.
‡ RM = Flat bar tire.
RMT = I-Beam tire.
NOTE—Tie holes, if necessary, shall be in the flat portion of the head sheet. There shall be no holes in the flute itself.

WELDING REQUIREMENTS FOR CLASS II REELS:

Head sheet to tire	continuous weld
Head sheet to inner ring	
Drum to inner ring	
Cross arm to cross arm	
Cross arm to inner ring	
Cross arm to hub	
Back-up plate to hub and cross arm	
Port frame	

All welds shall reflect good welding practice with proper penetration.

9009279 0002783 T31

Table 1-4
RETURNABLE WOOD REELS

Flange Diameter, Inches	Traverse Width, Inches	Drum Diameter, Inches	Maximum Overall Width, Inches	Minimum Arbor Hole, Inches
36	18	16	24½	3
42	24	24	34	3
48	24	24	34	3
54	32	32	43	3
60	32	32	43	3
66	36	40	48	3
72	36	48	48	3
72	36	40	48	3
78	36	48	48	3
78	36	40	48	3
78	48	48	62	3
84	36	56	50	3
84	48	56	62	3
84	48	48	62	3
90	54	56	68	4
90	54	48	68	4
96	54	56	68	4

Table 1-5
NONRETURNABLE WOOD REELS

Flange Diameter, Inches	Traverse Width, Inches	Drum Diameter, Inches	Approximate Overall Width, Inches	Approximate Maximum Reel Capacity,* Pounds	Arbor Hole, Inches	Drive Pin Holes on Radius, Inches	Bolts, (Number) and Size (Inches)	Cable Start Hole, Inches	Minimum Flange Thickness, Inches
24	12	10	14	350	2¼ or 3 1/16	1 on 3½	3 × 5/16	1½	⅞
24	18	10	20	525	2¼ or 3 1/16	1 on 3½	3 × 5/16	1½	⅞
27	18	12	21	700	2¼ or 3 1/16	1 on 4½	3 × 5/16	1½	1⅛
30	18	12	21	950	2¼ or 3 1/16	1 on 4½	4 × ⅜	1½	1⅛
32	24	14	28	1500	2¼ or 3 1/16	1 on 4½	4 × ⅜	2	1½
36	24	17	28	2000	2¼ or 3 1/16	1 on 6	4 × ⅜	2	1¾
40	24	17	28	2500	2¼ or 3 1/16	1 on 6	4 × ⅜	2	1¾
42	26	18	30	3000	2¼ or 3 1/16	1 on 6	4 × ⅜	2	1¾
45	28	21	32	3500	2¼ or 3 1/16	1½ on 8½	5 × ⅜	2½	1¾
50	32	24	37	4800	2¼ or 3 1/16	1½ on 10	6 × ⅜	2½	2⅛
58	32	28	37	6500	2¼ or 3 1/16	1½ on 10	6 × ⅜	3	2⅛
66	36	36	41½	7000	2¼ or 3 1/16	1½ on 10	6 × ½	3½	2¾
72	36	36	41½	8000	3 1/16 or 4⅛	1½ on 10	6 × ⅝	4	3¼
72	48	36	54½	8000	3 1/16 or 4⅛	1½ on 10	6 × ⅝	4	3¼
78	48	42	54½	9000	3 1/16 or 4⅛	1½ on 10	8 × ⅝	4	3¼
84	54	48	60½	10000	3 1/16 or 4⅛	1½ on 10	8 × ⅝	4	3¼
90	54	48	60½	15000	3 1/16 or 4⅛	1½ on 10	8 × ⅝	4	3¼
96	54	56	60½	15000	3 1/16 or 4⅛	1½ on 10	8 × ⅝	5	3¼

*This column and the following sentences have been approved as Authorized Engineering Information 1-11-1984.

1. Metal bushings are recommended where gross weight is in excess of 2500 pounds.
2. Cup washers are recommended where overall width is at a premium.
3. Tapered cable start (test hole) holes are recommended.
4. Inner flange supports are recommended on 90 and 96 inch reels. Center supports are recommended on all reels over 66 inches when maximum weights are used.
5. Construction dimensions may be varied for cable weights.

Copyright National Electrical Manufacturers Association
Provided by IHS under license with NEMA
No reproduction or networking permitted without license from IHS
Not for Resale

9009279 0002784 978

Table 1-6
NONRETURNABLE PLYWOOD REELS AND SPOOLS

Flange Diameter, Inches	Traverse Width, Inches	Drum Diameter, Inches	Approximate Overall Width, Inches	Approximate Maximum Reel Capacity,* Pounds	Arbor Hole, Inches	Drive Pin Holes on Radius, Inches	Bolts, (Number) and Size (Inches)	Cable Start Hole, Inches	Minimum Flange Thickness, Inches
6½	Note 3	1⅞	...	...	¾	⅜ on 1³⁄₁₆ radius	Note 4	⅜	...
10½	Note 3	3½	...	...	¾ or 1⁷⁄₁₆	½ on 1⅜ radius	Note 4	½	...
14	10	6	10¾	100	2¾ or 3¹⁄₁₆	1 on 2⅜ radius	Note 4	¾	⅜
18	10	6	11	185	2¾ or 3¹⁄₁₆	1 on 2⅜ radius	Note 4	¾	½
24	12	10	14	350	2¾ or 3¹⁄₁₆	1 on 3½ radius	3 × ⁵⁄₁₆	1½	¾
24	18	10	20	525	2¾ or 3¹⁄₁₆	1 on 3½ radius	3 × ⁵⁄₁₆	1½	¾
27	18	12	20	700	2¾ or 3¹⁄₁₆	1 on 4½ radius	3 × ⁵⁄₁₆	1½	⅞
30	18	12	20	950	2¾ or 3¹⁄₁₆	1 on 4½ radius	4 × ⅜	1½	⅞
32	24	14	26	1500	2¾ or 3¹⁄₁₆	1 on 4½ radius	4 × ⅜	2	1
36	24	17	26	2000	2¾ or 3¹⁄₁₆	1 on 6 radius	4 × ⅜	2	1
40	24	17	26	2500	2¾ or 3¹⁄₁₆	1 on 6 radius	4 × ⅜	2	1⅛
42	26	18	29	3000	2¾ or 3¹⁄₁₆	1 on 6 radius	4 × ⅜	2	1¼
45	28	21	31	3500	2¾ or 3¹⁄₁₆	1½ on 8½ radius	5 × ⅜	2½	1¼

*This column and the following have been approved as Authorized Engineering Information 1-11-1984.

1. Metal bushings are recommended where gross weight is in excess of 2500 pounds.
2. Tapered cable start (test hole) holes are recommended.
3. These items may be supplied in metal, plastic or fiber; traverse widths may range from 4 to 10 inches.
4. Bolts, steel strap and other fasteners may be used for spool assembly.

Table 1-7
DRUMS FOR NONRETURNABLE REELS
(See Tables 1-4, 1-5, and 1-6)

Flange Diameter, Inches	Traverse Width, Inches	Drum Diameter, Inches	Wood Drums Wood Thickness, Inches	Plywood Drums		Metal Drums U.S.S. Gauge
				Number of Plies	Thickness of Plies, Inches	
24	12	10	⅝ to ¾	3	³⁄₁₆	22
24	18	10	⅝ to ¾	3	³⁄₁₆	20
27	18	12	¾	3	³⁄₁₆	20
30	18	12	¾	3	¼	20
32	24	14	¾	3	¼	18
36	24	17	1¹⁄₁₆ to 1¼	3	⁵⁄₁₆	17
40	24	17	1¹⁄₁₆ to 1¼	3	⁵⁄₁₆	17
42	26	18	1¹⁄₁₆ to 1¼	3	⁵⁄₁₆	16
45	28	21	1¹⁄₁₆ to 1¼	3	⁵⁄₁₆	16
50	32	24	1¹⁄₁₆ to 1¼	...	...	...
58	32	28	1¹⁄₁₆ to 1¼	...	...	...
66	36	36	1¼ to 1½	...	...	...
72	36	36	1¼ to 1½	...	...	...
72	48	36	1⅜ to 1⅝	...	...	...
78	48	42	1⅜ to 1⅝	...	...	...
84	54	48	1½ to 1¾	...	...	...
90	54	48	1½ to 1¾	...	...	...
96	54	56	1½ to 1¾	...	...	...

Copyright National Electrical Manufacturers Association
Provided by IHS under license with NEMA
No reproduction or networking permitted without license from IHS
Not for Resale

9009279 0002785 804

Section 2

CAPACITIES OF PACKAGE TYPES

2.1 CALCULATION OF FOOTAGE CAPACITY

The formula for calculating footage capacities of reels for round cable is shown as follows. A 5 percent nesting factor and a 95 percent traverse utilization have been built into the formula. Therefore, cables must be wound evenly to obtain uniformity, compactness and the nesting of successive turns and layers.

$$F = \frac{\pi}{12}\left\{\left[B + \left(\frac{A - 2X - B}{1.9\,D}\right)^{*} 0.95\,D\right]\left[\frac{A - 2X - B}{1.9\,D}\right]^{*}\left[\frac{0.95\,C}{D}\right]^{*}\right\}$$

Where:

F = Feet of cable on reel
A = Flange diameter, in inches
B = Drum diameter, in inches
C = Inside traverse, in inches
D = Diameter of cable, in inches
X = Defined as distance between cable and the outer edge of the reel flange. Clearance equal to 1 inch or one cable diameter, whichever is the larger. On "T" suffix reels clearance based on diameter less tire consideration.

* Round off the resultant down to the nearest whole number.

Authorized Engineering Information 1-11-1984.

2.2 CAPACITY TABLES

Capacities of reels expressed in feet of round cable is given in Table 2-1. Varying cable constructions may slightly affect the obtainable capacity.

The table is constructed relating diameters across the top of the table to reel size by dimensions down the left column, with approximate maximum capacities in feet given in the table body.

Reel diameters with "T" suffixes indicate RMT steel reels constructed with 3 inch I-beam tires.

Authorized Engineering Information 1-11-1984.

Table 2-1

REEL CAPACITIES IN FEET

Reel Dimension			Cable Diameter														
FL	TR	DR	0.200	0.220	0.240	0.260	0.280	0.300	0.320	0.340	0.360	0.380	0.400	0.420	0.440	0.460	0.480	0.500
24	12	10	7350	5926	5095	4303	3652	3339	2746	2459	2181	1982	1726	1694	1452	1280	1246	1085
24	18	10	10961	8947	7697	6505	5569	5009	4159	3726	3307	2973	2589	2510	2207	1974	1897	1676
27	18	12	13966	11547	9568	8150	7046	5997	5356	4832	4324	3922	3450	3080	2726	2457	2358	2103
30	18	12	18673	15276	12998	10838	9572	8348	7180	6205	5622	5168	4613	4184	3769	3463	3076	2791
30	22	16	.....	.....	.....	.....	9313	8339	7040	6270	5630	5016	4431	4230	3764	3320	3209	2795
32	24	14	.....	.....	19133	15964	13983	12245	10585	9157	8294	7582	6887	6214	5566	5049	4550	4071
36	18	16	.....	.....	.....	.....	13058	11488	9985	8737	7963	6973	6256	5708	5176	4792	4293	3933
36	22	18	.....	.....	.....	.....	.....	13140	11461	9870	9033	8217	7427	6665	6064	5485	4928	4396
36	24	17	.....	.....	.....	.....	.....	14578	12651	11582	9978	9141	8325	7534	6772	6167	5583	5021
38	22	20	.....	.....	.....	.....	.....	.....	.....	10636	9731	8851	7999	7178	6532	5909	5311	4740
40	24	17	.....	.....	.....	.....	.....	19525	17275	15343	13488	12513	10983	10061	9162	8462	7779	7114
42	26	18	.....	.....	.....	.....	.....	23518	21004	18574	16488	14718	12806	11796	11003	10033	9274	8534
42	24	24	.....	.....	.....	.....	.....	.....	.....	.....	.....	.....	10021	9042	8103	7358	6641	5956
42	28	21	.....	.....	.....	.....	.....	.....	.....	.....	15600	14478	13175	11447	10435	9456	8673	8463
45	28	21	.....	.....	.....	.....	.....	.....	.....	.....	19535	17499	15307	14149	13015	11910	11039	10188
48	24	24	.....	.....	.....	.....	.....	.....	.....	.....	.....	.....	14473	13273	12104	11200	10319	9463
48	28	24	.....	.....	.....	.....	.....	.....	.....	.....	.....	.....	16759	15485	14240	13029	12075	11145
50	32	24	.....	.....	.....	.....	.....	.....	.....	.....	.....	.....	22069	20340	18058	16701	15376	14088
58	32	28	.....	.....	.....	.....	.....	.....	.....	.....	.....	.....	.....	.....	.....	.....	20623	19029
60	28	28	.....	.....	.....	.....	.....	.....	.....	.....	.....	.....	.....	.....	.....	.....	19625	18377
66	29	30	.....	.....	.....	.....	.....	.....	.....	.....	.....	.....	.....	.....	.....	.....	.....	22642

Copyright National Electrical Manufacturers Association
Provided by IHS under license with NEMA
No reproduction or networking permitted without license from IHS
Not for Resale

Table 2-1 (cont'd)

REEL CAPACITIES IN FEET

Reel Dimension			Cable Diameter															
FL	TR	DR	0.520	0.540	0.560	0.580	0.600	0.620	0.640	0.660	0.680	0.700	0.720	0.740	0.760	0.780	0.800	0.820
24	12	10	1050	946	913	771	780	748	619	626	596	602	486	490	495	467	393	368
24	18	10	1601	1396	1369	1177	1150	1123	947	921	931	903	745	752	726	700	589	566
27	18	12	2006	1768	1732	1508	1473	1436	1230	1195	1208	1017	983	993	958	788	795	763
30	18	12	2667	2397	2353	2095	2050	1806	1761	1533	1551	1506	1293	1307	1263	1067	1077	1036
30	22	16	2755	2368	2328	2027	1931	1891	1618	1580	1541	1502	1304	1268	1231	1194	1015	982
32	24	14	3945	3578	3452	3103	3061	2653	2609	2299	2255	2209	1921	1877	1895	1625	1583	1540
36	18	16	3753	3410	3080	3014	2699	2633	2335	2270	2075	2013	1948	1765	1704	1642	1473	1415
36	22	18	4340	3834	3774	3392	3237	2881	2821	2485	2427	2366	2131	2074	2017	1729	1742	1687
36	24	17	4860	4434	3923	3869	3479	3331	2966	2910	2852	2511	2454	2397	2154	2100	2044	1752
38	22	20	4675	4132	4065	3656	3486	3106	3038	2680	2615	2549	2298	2236	2172	1865	1878	1818
40	24	17	6471	5994	5393	5328	4881	4328	4258	3849	3778	3389	3318	2951	2980	2909	2561	2492
42	26	18	7814	7118	6598	5947	5379	5256	5183	4719	4643	4198	4122	3699	3622	3223	3149	3178
42	24	24	5746	5227	5023	4533	4454	3878	3800	3367	3291	3214	2814	2741	2759	2384	2316	2247
42	28	21	7708	6981	6284	6081	5551	5352	4849	4776	4294	4221	3662	3590	3619	3192	3122	3050
45	28	21	9360	8559	7786	7043	6966	6254	6171	5636	5551	5036	4817	4335	4374	3909	3826	3742
48	24	24	8635	8029	7255	6686	6583	5870	5763	5244	5137	4643	4537	4069	4103	3653	3554	3454
48	28	24	10242	9367	8524	7715	7623	6848	6751	6170	6071	5513	5269	4748	4787	4283	4189	4093
50	32	24	13066	12071	11104	10169	9887	9179	8311	8217	7387	7288	6659	6560	5956	5707	5282	5184
54	32	32	.....	11628	10579	10271	9277	8502	8215	7479	7203	7087	6400	6287	5634	5384	5416	4806
58	32	28	17785	16566	15376	14217	13094	12258	11881	11072	10054	9920	9165	8434	8300	7402	7463	6791
60	28	28	17151	15951	14778	13638	12824	11744	10972	10217	10064	9330	8384	8228	7777	7622	6966	6812
60	32	32	.....	16429	15189	13987	12826	12688	11567	10727	10348	9547	9400	8627	8481	7542	7596	6891
66	28	30	21243	19866	17734	16445	15543	14313	13451	13268	12422	11596	10499	10307	9822	9067	8879	8155
66	32	36	.....	.....	.....	.....	15607	14618	14145	13192	11990	11811	10925	10065	9892	8835	8896	8108
66	36	36	.....	.....	.....	.....	17792	16408	15951	14626	13625	13185	12225	11293	11128	9997	9832	8985
66	36	40	.....	.....	.....	.....	.....	.....	.....	.....	12164	11755	10799	10635	9717	9340	8477	8321
68	38	36	.....	.....	.....	.....	20755	19255	17801	16394	16230	14872	13844	13396	12412	12240	11290	11118
72	36	36	.....	.....	.....	.....	22732	21163	19636	19080	17968	16532	15478	15281	14254	12953	12753	11802
72	48	36	.....	.....	.....	.....	30310	28089	26306	25815	24077	22387	20748	20264	19005	17471	17307	15832
72	36	40	.....	.....	.....	.....	.....	.....	.....	.....	16516	15103	14047	13849	12827	12342	11373	11176
72	36	48	.....	.....	.....	.....	.....	.....	.....	.....	.....	.....	.....	.....	.....	.....	9026	8851
78	36	40	.....	.....	.....	.....	.....	.....	.....	.....	20301	19663	18486	17334	16209	15611	14536	14298
78	48	42	.....	.....	.....	.....	.....	.....	.....	.....	.....	24940	23123	22564	21173	19476	19277	17646
78	36	48	.....	.....	.....	.....	.....	.....	.....	.....	.....	.....	.....	.....	.....	.....	12207	11175
78	48	48	.....	.....	.....	.....	.....	.....	.....	.....	.....	.....	.....	.....	.....	.....	16567	14991
84T	36	42	.....	.....	.....	.....	.....	.....	.....	.....	.....	18417	17250	17015	15880	14439	14204	13154
84T	45	42	.....	.....	.....	.....	.....	.....	.....	.....	.....	23405	21655	21084	19761	18132	17924	16683
84	48	48	.....	.....	.....	.....	.....	.....	.....	.....	.....	.....	.....	.....	.....	.....	21247	19460
84	54	48	.....	.....	.....	.....	.....	.....	.....	.....	.....	.....	.....	.....	.....	.....	23856	21937
90T	45	42	.....	.....	.....	.....	.....	.....	.....	.....	.....	29679	27698	25773	24341	22519	22280	20922
90	54	48	.....	.....	.....	.....	.....	.....	.....	.....	.....	.....	.....	.....	.....	.....	29518	27380
96T	60	42	.....	.....	.....	.....	.....	.....	.....	.....	.....	46583	44071	41604	39188	38492	36134	33836

Copyright National Electrical Manufacturers Association
Provided by IHS under license with NEMA
No reproduction or networking permitted without license from IHS

Not for Resale

9009279 0002787 687

Table 2-1 (cont'd)
REEL CAPACITIES IN FEET

Reel Dimension			Cable Diameter														
FL	TR	DR	0.840	0.860	0.880	0.900	0.920	0.940	0.960	0.980	1.000	1.020	1.040	1.060	1.080	1.100	1.150	1.200
24	12	10	371	374	348	351	287	289	267	269	.....	.....	.....	.....	.....	.....	.....	.....
24	18	10	571	547	551	556	431	434	413	416	.....	.....	.....	.....	.....	.....	.....	.....
27	18	12	770	616	621	626	597	602	572	469	472	447	450	453	427	430	320	.....
30	18	12	1046	866	874	881	842	721	687	692	697	661	666	558	527	530	504	.....
30	22	16	949	955	921	926	734	738	708	712	681	685	688	523	525	527	505	482
32	24	14	1553	1308	1267	1277	1236	1062	1025	1033	995	1002	963	810	815	781	753	621
36	18	16	1427	1367	1211	1221	1165	1174	969	976	983	931	938	806	760	765	725	615
36	22	18	1632	1433	1383	1392	1340	1153	1112	1119	1072	1078	1085	872	876	881	846	663
36	24	17	1765	1713	1659	1454	1406	1415	1366	1375	1133	1140	1095	1102	1108	1062	858	869
38	22	20	1758	1546	1491	1500	1444	1250	1200	1207	1156	1162	1168	941	946	951	912	716
40	24	17	2515	2189	2123	2141	2072	1853	1790	1804	1739	1537	1477	1488	1498	1244	1201	1220
42	26	18	2800	2727	2750	2397	2326	2845	2273	2033	1966	1980	1912	1690	1627	1638	1377	1331
42	24	24	2260	1920	1856	1866	1801	1565	1507	1514	1456	1463	1403	1194	1200	1147	1101	920
42	28	21	2658	2590	2608	2539	2180	2193	2129	2142	2076	1820	1760	1770	1709	1475	1432	1387
45	28	21	3310	3228	3253	2847	2769	2789	2709	2429	2354	2370	2294	2033	1964	1976	1670	1620
48	24	24	3158	3063	2966	2690	2600	2617	2524	2267	2182	2195	2108	1873	1883	1803	1514	1533
48	28	24	3626	3534	3560	3121	3033	3053	2964	2662	2579	2595	2510	2229	2152	2164	1833	1775
50	32	24	5085	4546	4449	4350	3971	3878	3783	3425	3336	3245	3266	2828	2845	2759	2377	2316
54	32	32	4702	4596	4033	3934	3954	3854	3337	3352	3259	3165	3179	2709	2720	2634	2562	2153
58	32	28	6659	6525	5892	5761	5803	5201	5073	5108	4541	4418	4446	3915	3939	3821	3357	3273
60	28	28	6188	6037	5636	5489	5340	4959	4817	4851	4313	4342	4203	3857	3726	3749	3303	2880
60	32	32	6750	6082	5946	5808	5350	5219	5086	4653	4528	4401	4426	3877	3897	3778	3295	3206
66	28	30	7969	7279	7338	6670	6491	6541	5905	5949	5340	5377	5206	4828	4666	4696	4189	3705
66	32	36	7941	7771	7032	6867	6909	6207	6047	6082	5420	5268	5296	4678	4701	4556	4011	3901
66	36	36	8823	8659	7859	7907	7746	6983	6828	6671	6143	5995	5844	5346	5205	5231	4474	4370
66	36	40	8163	7352	7201	7238	6467	6323	6177	5465	5490	5352	5213	4706	4578	4597	3866	3767
68	38	36	9968	9796	9162	8996	8827	8004	7841	7674	7103	6945	6785	6243	6091	5938	5296	4682
72	36	36	11602	10688	10489	9875	9681	9484	8645	8452	7891	7706	7519	6985	6806	6845	5966	5332
72	48	36	15662	14524	14078	12993	12821	12646	11609	11436	10444	10275	10103	9386	9221	9054	8023	7236
72	36	40	10247	10054	9168	9223	9033	8186	8003	7818	7243	7067	6888	6344	6176	6207	5349	4721
72	36	48	7946	7780	7613	6955	6798	6640	6481	5702	5723	5574	5424	4864	4728	4743	3951	3843
78	36	40	13259	13022	12024	12107	11135	10906	9980	9756	9148	8932	8713	8134	7925	7969	6982	6278
78	48	42	17444	16189	15680	14486	14284	14079	12938	12736	11646	11450	11252	10467	10277	10084	8942	8072
78	36	48	10960	10742	9769	9817	9606	8679	8477	8273	7639	7446	7252	6653	6471	6497	5567	5425
78	48	48	14796	14598	13111	12918	12722	11572	11384	11193	10110	9928	9744	8940	8767	8593	7487	7363
84T	36	42	12921	11913	11683	11009	10786	10559	9634	9414	8799	8587	8373	7789	7585	7624	6649	5948
84T	45	42	16151	14967	14757	13616	13409	13199	12112	11906	10869	10669	10728	9736	9543	9346	8483	7435
84	48	48	19225	17854	17282	15978	15746	15511	14267	14037	12847	12625	12400	11547	11332	11115	9861	8908
84	54	48	21717	19876	19654	18215	17674	17450	16088	15868	14560	14347	14130	12890	12681	12470	11125	9845
84	36	56	.....	.....	.....	.....	.....	9038	8821	7880	7909	7704	7497	6844	6652	6675	5680	5526
84T	45	56	.....	.....	.....	.....	.....	8530	7501	7352	7202	7051	7071	6132	5994	5856	5739	4773
84	48	56	.....	.....	.....	.....	.....	12051	11846	10661	10468	10272	10075	9197	9013	8828	7639	7500
90T	45	42	20273	18967	17696	17451	16221	15977	14792	14550	14304	13176	13258	12163	11929	11691	10751	9561
90	54	48	27128	25062	23478	23223	21296	21039	19566	19311	19052	17640	17384	16028	15779	15526	14030	12595
90T	45	56	.....	.....	.....	.....	.....	11298	11090	9966	9770	9571	9606	8555	8369	8182	7247	6908
90	48	56	.....	.....	.....	.....	.....	15206	14957	14704	13420	13178	12933	12006	11774	11540	10191	9159
90	54	56	.....	.....	.....	.....	.....	17107	16866	16623	15210	14975	14738	13403	13176	12947	11497	10123
90T	54	56	.....	.....	.....	.....	.....	13557	13358	12052	11863	11673	11480	10266	10086	9904	8618	8290
96T	60	42	31601	31387	29211	27543	26874	25260	25022	23448	23207	21290	21045	19583	19339	17929	16381	15946
96	54	56	.....	.....	.....	.....	.....	22192	20602	20316	20027	18506	18224	16766	16493	16216	14603	13061
96T	60	56	.....	.....	.....	.....	.....	19007	18775	18541	16999	16473	16242	14799	14578	14354	12804	11328
96	66	60	.....	.....	.....	.....	.....	.....	.....	.....	21012	20761	20507	18810	18565	18317	16198	14477
108T	74	56	.....	.....	.....	.....	.....	36002	35725	33095	32813	30281	29997	27993	27711	25366	24864	22405
112	72	72	.....	.....	.....	.....	.....	.....	.....	.....	.....	.....	.....	.....	.....	.....	.....	21545

Copyright National Electrical Manufacturers Association
Provided by IHS under license with NEMA
No reproduction or networking permitted without license from IHS
Not for Resale

Table 2-1 (cont'd)

REEL CAPACITIES IN FEET

Reel Dimension			Cable Diameter														
FL	TR	DR	1.250	1.300	1.350	1.400	1.450	1.500	1.550	1.600	1.650	1.700	1.750	1.800	1.850	1.900	1.950	2.000
30	22	16′	347	350	331	312	315	207	208	.....	.....	.....	.....	.....	.....	.....	.....	.....
32	24	14	597	571	427	.....	.....	.....	.....	.....	.....	.....	.....	.....	.....	.....	.....	.....
36	18	16	579	587	446	452	419	332	336	.....	.....	.....	.....	.....	.....	.....	.....	.....
36	22	18	631	638	479	451	456	427	431	327	304	307	283	.....	.....	.....	.....	.....
36	24	17	682	651	620	627	469	473	446	450	422	.....	.....	.....	.....	.....	.....	.....
38	22	20	681	688	518	488	492	461	465	355	330	332	306	309	311	219	200	.....
40	24	17	999	957	761	771	732	741	568	574	539	.....	.....	.....	.....	.....	.....	.....
42	26	18	1284	1109	1065	850	861	820	778	639	602	608	615	.....	.....	.....	.....	.....
42	24	24	880	838	636	641	606	611	574	440	412	414	417	387	389	277	255	256
42	28	21	1128	1086	1043	864	827	789	796	598	603	570	575	541	410	413	386	389
45	28	21	1567	1293	1243	1055	1010	965	975	756	764	723	729	541	545	550	514	519
48	24	24	1471	1206	1148	976	924	933	880	728	682	687	693	511	515	518	478	482
48	28	24	1716	1419	1363	1159	1109	1058	1068	832	839	793	800	596	600	605	566	570
50	32	24	1961	1902	1842	1523	1466	1482	1194	1206	1153	899	907	861	868	875	653	657
54	32	32	2086	1713	1652	1589	1264	1273	1218	1227	938	891	897	849	854	859	619	622
58	32	28	2838	2754	2351	2270	1903	1923	1846	1598	1528	1456	1234	1171	1181	1191	1126	928
60	28	28	2787	2395	2303	2054	1968	1880	1652	1571	1587	1285	1297	1222	1233	1042	976	983
60	32	32	2756	2670	2257	2175	2092	1817	1742	1757	1417	1349	1359	1289	1069	1076	1015	1022
66	28	30	3588	3134	2709	2743	2631	2236	2261	1893	1913	1812	1589	1497	1511	1303	1220	1230
66	32	36	3390	3284	2812	2710	2280	2300	2204	1916	1829	1741	1484	1406	1416	1426	1346	1116
66	36	36	3814	3712	3195	3097	2622	2530	2553	2118	2033	2049	1658	1670	1593	1604	1525	1265
66	36	40	3224	3131	3036	2545	2457	2368	2028	1948	1868	1561	1491	1500	1429	1437	1096	1101
68	38	36	4420	3855	3751	3226	3127	3157	2669	2575	2479	2151	2065	2080	1992	1693	1615	1626
72	36	36	5207	4606	4036	3917	3795	3273	3307	2814	2705	2730	2281	2300	2197	1901	1809	1822
72	48	36	6943	6200	5327	5223	5115	4464	4359	3753	3652	3549	3122	3027	2930	2535	2448	2359
72	36	40	4601	4012	3895	3348	3238	3124	2760	2656	2549	2216	2120	2136	2038	1736	1650	1660
72	36	48	3733	3151	3050	2520	2429	2337	2350	1884	1803	1812	1730	1406	1338	1343	1274	1279
78	36	40	5603	5459	4821	4679	4084	3946	3560	3430	3296	2940	2816	2840	2367	2385	2270	1965
78	48	42	7735	6915	5949	5826	5700	4982	4860	4192	4076	3958	3489	3380	3269	2836	2737	2635
78	36	48	4747	4611	3980	3851	3273	3152	3175	2645	2535	2551	2076	2088	1989	2000	1899	1586
78	48	48	6330	6207	5254	5135	4411	4299	4185	3527	3423	3317	2841	2747	2652	2666	2569	2052
84T	36	42	5801	5137	4507	4370	4229	3654	3687	3144	3019	3044	2550	2569	2452	2127	2023	2036
84T	45	42	7305	6322	5589	5462	5332	4650	4525	3893	3774	3805	3221	3110	3133	2600	2499	2515
84	48	48	8527	7630	6571	6429	6284	5501	5361	4632	4500	4366	3857	3733	3608	3138	3026	2912
84	54	48	9711	8502	7567	7233	7095	6234	6100	5294	5167	5038	4302	4182	4059	3530	3420	3309
84	36	56	4797	4652	3978	3843	3706	3105	3123	2997	2454	2466	2355	2366	1881	1889	1792	1799
84T	45	56	4664	3790	3691	3590	2927	2839	2749	2659	2089	2096	2020	1943	1950	1872	1394	1398
84	48	56	6397	6262	5251	5124	4995	4234	4116	3997	3313	3206	3222	3114	2508	2519	2424	2329
90T	45	42	8687	7605	7454	6665	6514	5767	5618	4920	4776	4302	4166	4027	3587	3458	3327	3353
90	54	48	11506	10188	10033	8790	8631	7697	7540	6659	6506	5681	5535	5387	4635	4668	4528	4385
90T	45	56	6041	5726	4933	4804	4673	3952	3832	3711	3068	3083	2974	2864	2404	2309	2213	2223
90	48	56	8752	7787	7401	6508	6352	5517	5369	5219	4460	4321	4347	3648	3521	3540	3411	2793
90	54	56	9968	8677	8522	7322	7171	6253	6110	5964	5120	4985	4848	4086	3961	3983	3856	3174
90T	54	56	7285	6978	6047	5765	5640	4799	4684	4568	3804	3700	3594	3487	2822	2834	2741	2646
96T	60	42	14451	13015	11926	10602	10461	9457	9060	8117	7968	7075	6927	6088	5946	5999	5209	5071
96	54	56	11884	11413	10300	8979	8803	7808	7637	7463	6538	6372	5513	5358	5200	5234	4452	4305
96T	60	56	10940	9566	9419	8136	7991	6988	6665	6524	5616	5484	5350	4524	4402	4425	4301	3555
96	66	60	14042	12424	10894	10499	10338	8935	8777	7678	7528	7176	6181	6039	5895	5144	5014	4882
108T	74	56	20418	18504	16667	16185	14450	13977	12636	12179	10917	10743	9544	9375	9203	8082	7918	7750
112	72	72	19045	18485	16485	14586	14381	12596	12395	11906	10537	10340	9048	8864	8442	8487	7312	7137
120	73	80	.....	.....	19387	17218	16994	14947	14421	14197	12321	12106	10624	10422	10218	10011	8655	8465
128	92	90	.....	.....	.....	.....	.....	19514	17126	16595	16059	14172	13678	13458	11718	11515	11059	9474
142	82	96	.....	.....	.....	.....	.....	.....	.....	20633	18615	17918	16027	15740	15449	13679	13070	12792

Copyright National Electrical Manufacturers Association
Provided by IHS under license with NEMA
No reproduction or networking permitted without license from IHS

Not for Resale

Table 2-1 (cont'd)
REEL CAPACITIES IN FEET

Reel Dimension			Cable Diameter														
FL	TR	DR	2.050	2.100	2.150	2.200	2.250	2.300	2.350	2.400	2.450	2.500	2.550	2.600	2.650	2.700	2.750	2.800
42	24	24	257	235	236	237	238	215	134	.....	.....	.....	.....	.....	.....	.....	.....	.....
42	28	21	361	.....	.....	.....	.....	.....	.....	.....	.....	.....	.....	.....	.....	.....	.....	.....
45	28	21	482	.....	.....	.....	.....	.....	.....	.....	.....	.....	.....	.....	.....	.....	.....	.....
48	24	24	485	334	336	338	340	308	310	.....	.....	.....	.....	.....	.....	.....	.....	.....
48	28	24	529	401	404	406	374	377	379	.....	.....	.....	.....	.....	.....	.....	.....	.....
50	32	24	618	622	626	586	590	445	413	.....	.....	.....	.....	.....	.....	.....	.....	.....
54	32	32	583	586	583	549	552	393	364	366	367	368	339	340	341	342	344	314
58	32	28	872	878	885	827	658	662	615	618	622	626	577	580	438	440	442	.....
60	28	28	915	753	758	764	705	710	715	567	518	521	525	528	531	480	483	.....
60	32	32	960	769	773	722	726	730	677	681	519	521	480	482	484	486	488	446
66	28	30	1145	966	974	981	906	913	919	754	690	695	699	704	708	504	507	510
66	32	36	1048	1054	1061	991	794	798	740	744	748	752	692	696	530	532	535	488
66	36	36	1198	1205	1136	1143	916	859	864	868	810	814	818	822	578	581	583	586
66	36	40	1041	1046	985	990	995	714	717	720	671	673	676	679	629	631	450	452
68	38	36	1546	1280	1212	1219	1227	1157	1163	930	873	877	881	822	826	830	834	586
72	36	36	1728	1465	1382	1391	1400	1316	1324	1092	1020	1026	1031	1037	963	766	770	774
72	48	36	2376	1922	1935	1855	1867	1786	1797	1482	1412	1420	1349	1357	1364	1022	1027	1032
72	36	40	1572	1306	1231	1237	1244	1167	1174	941	878	882	886	890	826	829	833	636
72	36	48	1209	937	882	885	888	831	834	837	780	782	564	565	523	524	526	527
78	36	40	1862	1875	1769	1781	1510	1418	1427	1435	1341	1107	1113	1119	1038	1044	1049	1054
78	48	42	2653	2153	2166	2075	2087	1994	2006	1661	1582	1590	1509	1517	1524	1148	1153	1158
78	36	48	1500	1507	1419	1426	1152	1079	1084	1088	1014	1018	1022	1026	729	732	734	736
78	48	48	2062	1978	1987	1901	1536	1465	1471	1477	1405	1410	1337	1342	1033	976	979	982
84T	36	42	1929	1640	1547	1556	1565	1469	1478	1224	1142	1148	1154	1160	1076	861	864	868
84T	45	42	2411	2051	1960	1971	1983	1889	1900	1486	1494	1502	1420	1428	1435	1076	1081	1085
84	48	48	2929	2384	2397	2295	2307	2203	2215	1840	1752	1760	1669	1677	1685	1273	1278	1283
84	54	48	3329	2725	2625	2639	2538	2551	2448	2034	1946	1955	1964	1874	1883	1512	1438	1444
84	36	56	1701	1381	1300	1304	1309	1226	1230	1235	889	891	894	896	830	832	835	837
84T	45	56	1336	1339	1276	1280	1284	884	886	839	840	842	795	796	798	750	752	753
84	48	56	2339	1813	1820	1739	1745	1664	1670	1676	1231	1234	1169	1172	1176	1110	1113	1116
90T	45	42	2805	2825	2703	2336	2351	2242	2256	2144	1816	1826	1728	1738	1748	1648	1358	1365
90	54	48	3859	3729	3597	3117	2999	3017	2896	2913	2356	2368	2380	2273	2284	2296	1800	1808
90T	45	56	2126	1727	1646	1652	1658	1576	1582	1499	1162	1166	1100	1103	1107	1040	1043	1046
90	48	56	2807	2692	2705	2588	2162	2062	2071	2079	1978	1986	1515	1520	1526	1441	1446	1451
90	54	56	3190	3077	2963	2977	2378	2388	2289	2298	2198	2206	1783	1699	1705	1711	1627	1632
90T	54	56	2657	2072	1993	2000	1920	1927	1846	1852	1367	1371	1375	1310	1314	1318	1252	1256
96T	60	42	4931	4378	4249	4116	4147	3487	3511	3388	3411	3285	2828	2716	2733	2749	2634	2221
96	54	56	4331	3617	3484	3503	3368	3385	2756	2769	2649	2661	2674	2551	2122	2130	2026	2034
96T	60	56	3445	3461	3349	3235	2702	2605	2616	2517	2527	2427	1961	1878	1885	1891	1808	1814
96	66	60	4748	3930	3948	3829	3709	3725	3603	3009	2904	2915	2809	2820	2713	2192	2104	2110
108T	74	56	6718	6561	6402	5464	5495	5348	5199	5228	4375	4398	4262	4284	4146	3523	3403	3418
112	72	72	6961	5895	5735	5760	5598	5434	4656	4513	4368	4385	4238	4254	3420	3431	3305	3316
120	78	80	8272	7034	6860	6684	6507	6533	5432	5275	5293	5135	5152	4992	4033	4045	3907	3919
128	92	90	9287	9098	8908	8717	7309	7332	7162	6990	6817	5567	5582	5433	5283	5297	5145	5159
142	82	96	11487	11231	10972	9468	9231	8993	9026	8785	7441	7466	7249	7030	7054	5847	5864	5671

Copyright National Electrical Manufacturers Association
Provided by IHS under license with NEMA
No reproduction or networking permitted without license from IHS

Not for Resale

Table 2-1 (cont'd)
REEL CAPACITIES IN FEET

Reel Dimension			Cable Diameter														
FL	TR	DR	2.850	2.900	2.950	3.000	3.100	3.200	3.300	3.400	3.500	3.600	3.700	3.800	3.900	4.000	4.100	4.200
54	32	32	315	196	196	197	178	.....	.....	.....	.....	.....	.....	.....	.....	.....	.....	.....
60	32	32	448	450	317	318	288	.....	.....	.....	.....	.....	.....	.....	.....	.....	.....	.....
66	28	30	512	515	518	.....	.....	.....	.....	.....	.....	.....	.....	.....	.....	.....	.....	.....
66	32	36	490	492	494	496	450	318	320	287	288	.....	.....	.....	.....	.....	.....	.....
66	36	36	588	541	543	546	550	354	356	358	324	.....	.....	.....	.....	.....	.....	.....
66	36	40	453	416	418	419	421	385	388	243	219	220	221	222	198	.....	.....	.....
68	33	36	588	590	593	595	550	554	508	358	361	.....	.....	.....	.....	.....	.....	.....
72	36	36	778	716	720	723	730	504	508	512	464	.....	.....	.....	.....	.....	.....	.....
72	48	36	1037	977	981	986	929	706	660	665	671	.....	.....	.....	.....	.....	.....	.....
72	36	40	638	587	589	592	596	546	550	390	353	355	357	359	321	.....	.....	.....
72	36	48	528	486	487	488	491	283	284	285	257	258	259	260	232	232	233	108
78	36	40	840	774	777	781	787	722	728	554	502	505	509	513	459	.....	.....	.....
78	48	42	1163	1095	1099	1104	1039	794	742	747	752	699	704	497	458	461	463	.....
78	36	48	739	679	682	684	688	448	450	453	409	411	413	415	232	232	233	234
78	48	48	985	927	930	933	876	628	586	589	591	549	551	554	319	320	321	293
84T	36	42	872	803	806	809	816	567	571	575	521	524	528	373	333	335	337	.....
84T	45	42	1090	1022	1026	1030	965	737	685	690	694	641	645	456	417	419	421	.....
84	48	48	1288	1212	1217	1222	1149	881	824	829	834	775	779	554	510	513	515	471
84	54	48	1449	1374	1379	1385	1313	1007	950	956	898	904	844	600	603	559	562	565
84	36	56	839	772	556	557	560	511	513	515	466	468	297	297	265	266	267	267
84T	45	56	755	450	451	452	421	422	391	392	393	361	363	171	156	156	156	157
84	48	56	1119	1052	753	760	712	716	667	670	673	624	396	397	365	366	367	334
90T	45	42	1372	1287	1293	1299	1218	973	905	913	920	850	645	650	595	598	602	.....
90	54	48	1816	1723	1730	1738	1650	1323	1250	1259	1184	1193	844	850	855	794	798	803
90T	45	56	1049	982	708	709	661	664	616	619	621	572	363	364	332	333	334	334
90	48	56	1456	1370	1374	1058	993	999	933	938	943	624	627	629	579	582	584	533
90	54	56	1638	1552	1557	1199	1135	1142	1076	1082	1015	728	679	682	685	635	637	640
90T	54	56	1259	1193	859	861	814	818	770	773	725	728	429	430	431	399	400	401
96T	60	42	2234	2133	2145	2157	2065	1608	1623	1542	1556	1160	1169	1179	1109	1117	1046	.....
96	54	56	2042	1936	1944	1563	1481	1491	1407	1416	1015	1021	953	958	964	894	899	640
96T	60	56	1820	1735	1741	1341	1277	1213	1220	1154	1161	780	783	787	737	741	691	693
96	66	60	2117	2028	2034	1943	1956	1435	1443	1374	1304	1311	1240	890	893	841	844	791
108T	74	56	3296	3311	3187	3201	2545	2448	2467	2368	1901	1818	1829	1744	1755	1668	1274	1205
112	72	72	3326	3198	3208	2483	2497	2397	2295	2307	1697	1704	1622	1629	1545	1552	1467	1055
120	78	80	3930	3790	3801	2960	2851	2866	2755	2643	2051	1962	1969	1879	1886	1794	1801	1227
128	92	90	4065	4075	3948	3957	3838	3718	3596	2694	2596	2605	2506	2515	2414	1672	1677	1601
142	82	96	5687	5493	5508	5312	4463	4306	4147	3987	3243	3109	3122	2985	2848	2860	2220	2110

Copyright National Electrical Manufacturers Association
Provided by IHS under license with NEMA
No reproduction or networking permitted without license from IHS

Not for Resale

Table 2-1 (cont'd)
REEL CAPACITIES IN FEET

Reel Dimension			Cable Diameter														
FL	TR	DR	4.300	4.400	4.500	4.600	4.700	4.800	4.900	5.000	5.250	5.500	5.750	6.000	6.250	6.500	6.750	7.000
72	36	48	95	95	95	95	96	.....	.....	.....	.....	.....	.....	.....	.....	.....	.....	.....
78	36	48	205	206	207	207	208	.....	.....	.....	.....	.....	.....	.....	.....	.....	.....	.....
78	48	48	294	295	296	267	268	.....	.....	.....	.....	.....	.....	.....	.....	.....	.....	.....
84	48	48	473	475	477	431	268	.....	.....	.....	.....	.....	.....	.....	.....	.....	.....	.....
84	54	48	520	523	525	527	298	.....	.....	.....	.....	.....	.....	.....	.....	.....	.....	.....
84	36	56	235	235	236	237	237	238	95	95	95	96	.....	.....	.....	.....	.....	.....
84T	45	56	141	141	142	142	142	126	127	127	127	112	.....	.....	.....	.....	.....	.....
84	48	56	335	336	337	305	305	306	142	143	127	128	.....	.....	.....	.....	.....	.....
90	54	48	741	523	525	527	482	.....	.....	.....	.....	.....	.....	.....	.....	.....	.....	.....
90T	45	56	302	303	304	305	305	272	127	127	127	112	.....	.....	.....	.....	.....	.....
90	48	56	536	538	337	305	305	306	307	308	276	278	.....	.....	.....	.....	.....	.....
90	54	56	589	592	371	372	339	340	341	342	310	313	.....	.....	.....	.....	.....	.....
90T	54	56	369	370	371	372	339	340	158	159	143	144	.....	.....	.....	.....	.....	.....
96	54	56	589	592	594	597	545	547	549	551	310	313	.....	.....	.....	.....	.....	.....
96T	60	56	696	645	405	406	407	375	376	377	345	347	.....	.....	.....	.....	.....	.....
96	66	60	794	797	743	746	469	470	435	436	403	405	371	.....	.....	.....	.....	.....
108T	74	56	1212	1142	1148	1154	1082	766	769	772	724	675	.....	.....	.....	.....	.....	.....
112	72	72	992	995	999	935	938	942	877	880	557	518	477	480	439	441	444	185
120	78	80	1231	1162	1166	1170	1100	1103	1107	1036	659	615	571	574	529	531	486	226
128	92	90	1606	1530	1534	1538	1461	1465	1388	885	837	788	792	743	693	696	302	303
142	82	96	2117	2006	2013	1901	1907	1378	1295	1298	1220	1227	1147	674	677	624	626	629

Copyright National Electrical Manufacturers Association
Provided by IHS under license with NEMA
No reproduction or networking permitted without license from IHS

Not for Resale

Section 3

CABLE BENDING

Excessive or extreme bending can be detrimental to cable. Limitations on cable bending can best be expressed by identifying cable type and expressing the bending limit in terms of a multiplier of cable diameter. Minimum drum diameters of reels for cables are given in Table 3-1.

NEMA Standard 1-11-1984.

Table 3-1

MINIMUM DRUM DIAMETERS OF REELS FOR CABLES

Type of Cable	Minimum Drum Diameter as a Multiple of Outside Diameter[1] of Cable			
	Type of Insulation			
	Paper			
	Solid and Gas	Oil Filled	Varnished Cloth	Extruded
A. Single and multiple conductor nonmetallic covered cable				
1. Nonshielded and wire shielded, including cables with concentric wires:				
a. 0–2000 volts	14	—	14	10
b. Over 2000 volts;				
(1) Nonjacketed with concentric wires	—	—	—	14
(2) All others	14	—	14	12
2. Tape shielded	14	—	14	14
B. Single- and multiple-conductor metallic-covered cable:				
1. Tubular metallic sheathed;				
a. Lead	14	14*	14	14
b. Aluminum;				
(1) Outside diameter—1.750" and less	25	25	25	25
(2) Outside diameter—1.751" and larger	30	30	30	30
2. Wire armored	16	18	16	16
3. Flat tape armored	16	18	16	16
4. Corrugated metallic sheathed	16	18	14	14
5. Interlocked armor	14	18	14	14
C. Multiple single conductors cabled together without common covering, including self-supporting cables				
The circumscribing overall diameter shall be multiplied by the factor given in item A or B and then by the reduction factor at the right	0.85	—	0.85	0.75
D. Combinations				
For combinations of the types described in items A, B and C, the highest factor for any component type shall be used.				
E. Single- and multiple conductor cable in coilable nonmetallic duct				
Outside diameter of duct, inches—0.0 –0.50	—	—	—	26
0.51–1.00	—	—	—	24
1.01–1.25	—	—	—	22
1.26–1.50	—	—	—	21
Over 1.50	—	—	—	20

[1] Outside Diameter—

1. When metallic-sheathed cables are covered only by a thermosetting or thermoplastic jacket, the "outside diameter" is the diameter over the metallic sheath itself. In all other cases, the outside diameter is the diameter outside of all the material on the cable in the state in which it is to be wound upon the reel.
2. For "flat-twin" cables (where the cable is placed upon the reel with its flat side against the drum), the minor outside diameter shall be multiplied by the appropriate factor to determine the minimum drum diameter.
3. The multiplying factors given for item E refer to the outside diameter of the duct.

* For single-conductor cables with more than 500 mils of insulation, this factor is 18.

Copyright National Electrical Manufacturers Association
Provided by IHS under license with NEMA
No reproduction or networking permitted without license from IHS
Not for Resale

Section 4

PROTECTIVE COVERINGS

Outlined below are minimum requirements for protective coverings on returnable and non-returnable reels containing electrical cable, cord, and wire for domestic shipment under normal conditions and proper handling. Improved methods of handling, storage, and transportation would permit lesser degrees of protective covering. Reels intended for shipment overseas may require covering of heavier materials. Four classes of protection are defined and associated to produce type and reel size in Table 4-1.

Class 1

No covering normally required.

Class 2 Physical Protector

Purpose—To protect against physical damage in transit and to provide protection against weathering during storage.

Material—Fiberboards, corrugates, or flexible films.

Class 3 Heavy Duty Physical Protector

Purpose—To provide increased physical protection.

Material—Plywood, wood veneers, wirebound lagging, or thicker Class 2 materials.

Class 4 Extra Heavy Duty Physical Protector

Purpose—To provide a substantial amount of physical protection.

Material—Wood lags, multiple layers of Class 3 materials, or any combination of laminates applied to Class 3 materials.

Authorized Engineering Information 1-11-1984.

Table 4-1

PRODUCT-CLASS PROTECTION

	Reel Diameters, Inches		
	Under 54	54–72	Over 72
Power and control cable 600 volts and less	1	2	2
Power cable: nonshielded over 600 volts	2	2	2
shielded through 39 kv	2	3	3
shielded 40 kv and up	3	4	4
Interlocked armored cable: steel and bronze	2	2	2
aluminum	2	3	3
Varnished cloth insulated or paper insulated power cable with lead sheath	3	4	4
Aluminum sheathed (smooth) power cable (plain or jacketed)	2	3	4
Aluminum sheathed (corrugated) power cable (plain or jacketed)	2	2	2
Preassembled plastic duct	1	1	1
Bare aluminum and ACSR under 230 kv	2	2	3
ACSR and EHV over 230 kv	4	4	4
Bare copper	1	1	2
Communications cable: plastic	2	2	2
paper	2	3	3

Copyright National Electrical Manufacturers Association
Provided by IHS under license with NEMA
No reproduction or networking permitted without license from IHS
Not for Resale

9009279 0002794 817

Section 5

MARKING AND IDENTIFICATION
(Intended for Future Publication)

Copyright National Electrical Manufacturers Association
Provided by IHS under license with NEMA
No reproduction or networking permitted without license from IHS

Not for Resale

9009279 0002795 753

NEMA STANDARDIZATION

The purpose of NEMA Standards, their classification and status are set forth in certain clauses of the NEMA Bylaws, which are quoted below:

Purpose of Standards

National Electrical Manufacturers Association Standards are adopted in the public interest and are designed to eliminate misunderstandings between the manufacturer and the purchaser and to assist the purchaser in selecting and obtaining the proper product for its particular need. Existence of a National Electrical Manufacturers Association Standard does not in any respect preclude any member or nonmember from manufacturing or selling products not conforming to the standard.

(Bylaw—Art. V, Sec. 1)

Definition of a Standard

A standard of the National Electrical Manufacturers Association defines a product, process or procedure with reference to one or more of the following: nomenclature, composition, construction, dimensions, tolerances, safety, operating characteristics, performance, rating, testing, and the service for which they are designed.

(Bylaw—Art. V, Sec. 2, Subsection A)

Dimensions

Where dimensions are given for interchangeability purposes, alternate dimensions satisfying the other provisions of the standards publication may be capable of otherwise equivalent performance.

(NEMA Policy Memorandum 84-2, dated June 7, 1984)

Classes of Standards

National Electrical Manufacturers Association Standards are of two classes:

1. NEMA Standard, which relates to a product commercially standardized and subject to repetitive manufacture, which standard has been approved by at least 90 percent of the members of the Subdivision eligible to vote thereon;
2. Suggested Standard for Future Design, which may not have been regularly applied to a commercial product, but which suggests a sound engineering approach to future development, which standard has been approved by at least two-thirds of the members of the Subdivision eligible to vote thereon.

(Bylaw—Art. V, Sec. 2, Subsection B)

Authorized Engineering Information

Authorized Engineering Information consists of explanatory data and other engineering information of an informative character not falling within the classification of NEMA Standard or Suggested Standard for Future Design.

(Bylaw—Art. V, Sec. 6, 1st Sentence)

Official Standards Proposal

An Official Standards Proposal is an official draft of a proposed standard which is formally recommended to an outside organization(s) for consideration, comment and/or approval.

(Bylaw—Art. V, Sec. 4, Subsection A)

Identification of Status

Standards in NEMA Standards Publications are identified in the foreword or following each standard as "NEMA Standard" or "Suggested Standard for Future Design." These indicate the status of the standard. These words are followed by a date which indicates when the standard was adopted in its present form by the Association.

The material identified as "Authorized Engineering Information" and "Official Standards Proposal" is

Copyright National Electrical Manufacturers Association
Provided by IHS under license with NEMA
No reproduction or networking permitted without license from IHS
Not for Resale

9009279 0002796 69T

WIRE AND CABLE DIVISION
OF THE
NATIONAL ELECTRICAL MANUFACTURERS ASSOCIATION

MEMBER COMPANIES

AFC-American Flexible Conduit Company
A Nortek Company
New Bedford, MA 02745

Algonquin Industries, Inc.
Guilford, CT 06437

Alpha Wire Corporation
Elizabeth, NJ 07207

Amercable Corporation
El Dorado, AR 71730

American Wire Corporation
Sandy Hook, CT 06482

Anaconda Wire and Cable Company
Greenwich, CT 06836-3110

AnaMag
Glen Ellyn, IL 60137

The Asco Wire and Cable Company
Bridgeport, CT 06608

Associated Professional Engineers
Oakland, CA 94605

Barcel Wire and Cable Corporation
Electronics Division
Irvine, CA 92714-5885

Belden Electrical Wire Products
Division of Cooper Industries
Geneva, IL 60134

Brand-Rex Company
Willimantic, CT 06226

The Bridgeport Insulated Wire Company
Bridgeport, CT 06610

Bristol Corporation
Easyheat-Wirekraft Division
Lakeville, IN 46536

Cablec Corporation
Greenwich, CT 06836

Carol Cable Company, Inc.
Pawtucket, RI 02862

Champlain Cable Corporation
Winooski, VT 05404

Chicago Magnet Wire Corporation
Elk Grove Village, IL 60007

Continental Wire and Cable
Anaconda Wire and Cable Company
York, PA 17405

Eaton Corporation
Process Control Components Division
Aurora, OH 44202

Elektrisola, Inc.
Penacook, NH 03303

Essex Group, Inc.
Magnet Wire and Insulation Division
Fort Wayne, IN 46804

Essex Group, Inc.
Power Conductor Division
Marion, IN 46552

Ettco Wire and Cable Corporation
Ridgewood, NY 11385

General Cable Company
GK Technologies, Inc.
Greenwich, CT 06836

General Electric Company
Bridgeport, CT 06602

Habia Cable, Inc.
Ronkonkoma, NY 11779

Harbour Industries, Inc.
Shelburne, VT 05482

Harvey Hubbell, Inc./Kerite Company
Seymour, CT 06483

Hitemp Wires
Anaconda Wire and Cable Company
Bohemia, NY 11716

Hudson Wire Company
Ossining, NY 10562

Independent Cable, Inc.
Hudson, MA 01749

ITT Royal Electric Division
Pawtucket, RI 02862-1655

ITT Surprenant Division
Clinton, MA 01510

Kagan-Dixon Wire Corporation
Subsidiary of Southwire Company
Osceola, AR 72370

Laribee Wire, Inc.
New York, NY 10017

Leviton Manufacturing Company, Inc.
Little Neck, NY 11362

Liberty Copper & Wire Company
Downers Grove, IL 60515

Markel Corporation
Norristown, PA 19404

Micro-Tek Corporation
Cinnaminson, NJ 08077

Milibride, Inc.
A Belden Company
Essex Junction, VT 05452

Newcon Wire and Cable Corporation
New Haven, CT 06511

The Okonite Company
Ramsey, NJ 07446

Pacific Electricord Company
Gardena, CA 90247

Phalo Corporation
Shrewsbury, MA 01545

Phelps Dodge Cable & Wire Company
Greenwich, CT 06836

Phelps Dodge Magnet Wire Company
Fort Wayne, IN 46801

Philadelphia Insulated Wire Company
Moorestown, NJ 08057

Pirelli Cable Corporation
Union, NJ 07083

Prestolite, Div. of Bunker Ramo-Eltra Corporation
Port Huron, MI 48060

Quirk Wire Company, Inc.
DBA Wirecraft Products
West Brookfield, MA 01585

Radix Wire Company
Cleveland, OH 44132

Rea Magnet Wire Company, Inc.
Fort Wayne, IN 46896

The Rockbestos Company
Div. of Cerock Wire & Cable Group, Inc.
Wallingford, CT 06492

Rome Cable Corporation
Rome, NY 13440

Siecor
Charlotte, NC 28217

Southwire Company
Carrollton, GA 30119

Square D Company
Palatine, IL 60067

Albert H. Surprenant, Inc.
Jaffrey, NH 03452

Teledyne Thermatics
Elm City, NC 27822

Teledyne Western Wire & Cable
Los Angeles, CA 90058

Tensolite Company
Div. of Carlisle Corporation
Buchanan, NY 10511

Thermax Wire Corporation
Flushing, NY 11354

Thermo Electric Company, Inc.
Saddle Brook, NJ 07662

Times Fiber Communications, Inc.
Wallingford, CT 06492

Triangle PWC Inc.
Subs. of Triangle Industries, Inc.
New Brunswick, NJ 08903

Viking Wire Company, Inc.
Danbury, CT 06810

Westinghouse Electric Corporation
Wire Division
Abingdon, VA 24210

Woods Wire Products, Inc.
Carmel, IN 46032

Copyright National Electrical Manufacturers Association
Provided by IHS under license with NEMA
No reproduction or networking permitted without license from IHS
Not for Resale