NEMA VE 2

CABLE TRAY INSTALLATION GUIDELINES

Copyright National Electrical Manufacturers Association
Provided by IHS under license with NEMA
No reproduction or networking permitted without license from IHS
Not for Resale

Copyright National Electrical Manufacturers Association
Provided by IHS under license with NEMA
No reproduction or networking permitted without license from IHS
Not for Resale

NEMA Standards Publication VE 2-2000

Cable Tray Installation Guidelines

Published by:

National Electrical Manufacturers Association
1300 North 17th Street
Rosslyn, VA 22209

Approved by:

Cable Tray Institute
1300 North 17th Street
Rosslyn, VA 22209

© Copyright 2001 by the National Electrical Manufacturers Association. All rights including translation into other languages, reserved under the Universal Copyright Convention, the Berne Convention for the Protection of Literary and Artistic Works, and the International and Pan American Copyright Conventions.

Copyright National Electrical Manufacturers Association
Provided by IHS under license with NEMA
No reproduction or networking permitted without license from IHS
Not for Resale

Copyright National Electrical Manufacturers Association
Provided by IHS under license with NEMA
No reproduction or networking permitted without license from IHS
Not for Resale

Contents

Foreword iii

Scope iv

Section 1 GENERAL 1

Section 2 RECEIVING AND UNLOADING 3

Section 3 STORAGE 5

Section 4 INSTALLATION 7
4.1 Common Tools for Installation 7
4.2 Support Installation 7
4.3 Straight Section Installation 16
4.4 Fittings Installation 24
4.5 Field Modifications 26
4.6 Accessories 29
4.7 Grounding and Bonding 34

Section 5 INSTALLATION OF CABLE 39
5.1 General 39
5.2 Handling and Storage 39
5.3 Cable Tray Preparation 39
5.4 Cable Pulling Considerations 39
5.5 Pulling the Cable 40
5.6 Fastening of Cables 41
5.7 Protecting Installed Cable 42

Section 6 MAINTENANCE 43
6.1 Inspection 43
6.2 Inactive or Dead Cables 43
6.3 Adding Cables 43

Appendix A TYPICAL CABLE TRAY TYPES 45

--`,,`,,`-`-`,,`,,`,`,,`---

Copyright National Electrical Manufacturers Association
Provided by IHS under license with NEMA
No reproduction or networking permitted without license from IHS
Not for Resale

--`,,`,,`-`-`,,`,,`,`,,`---

Copyright National Electrical Manufacturers Association
Provided by IHS under license with NEMA
No reproduction or networking permitted without license from IHS

Not for Resale

Foreword

For Cable Tray Installers—This publication is intended as a practical guide for the proper installation of cable tray systems. Cable tray systems design shall comply with NEC Article 318, NEMA VE 1, and NEMA FG 1 and follow safe work practices as described in NFPA 70E.

These guidelines and information do not intend to cover all details or variations in cable tray systems nor provide for every possible installation contingency.

Construction Experience—It is recommended that the work described be performed by qualified persons familiar with standard electrical construction practices, electrical equipment, and safety of electrical wiring systems.

These guidelines will be useful to engineers, contractors, and maintenance personnel. This publication will be reviewed periodically with the purpose of updating it to reflect advancing technology and construction techniques. Please address any comments or questions to:

Vice President, Engineering
National Electrical Manufacturers Association
1300 North 17th Street
Suite 1874
Rosslyn, VA 22209

or

Technical Director
Cable Tray Institute
4101 Lake Boone Trail
Suite 201
Raleigh, NC 27607-6518

This is the second edition of this publication.

This standards publication was developed by the NEMA Metal Cable Tray and Nonmetallic Cable Tray Sections. Section approval of the standard does not necessarily imply that all section members voted for its approval or participated in its development. At the time it was approved, the Metal Cable Tray and Nonmetallic Cable Tray Sections were composed of the following members:

Champion Fiberglass—Spring, TX
Chalfant Manufacturing Company—Cleveland, OH
Cooper B-Line—Highland, IL
Enduro Fiberglass Systems, Inc.—Houston, TX
GS Metals Corporation—Pinckneyville, IL
MP Husky Corporation—Greenville, SC
P-W Industries, Inc.—Atlanta, GA
Seasafe, Inc.—Lafayette, LA
Square D Company—Oxford, OH
Thomas & Betts Corporation—Memphis, TN
T. J. Cope, Inc.—Wayne, MI
Tex Tray Inc.—Houston, TX
The Wiremold Company—West Hartford, CT

DISCLAIMER

The standards or guidelines presented in a NEMA Standards Publication are considered technically sound at the time they are approved for publication. They are not a substitute for a product seller's or user's own judgment with respect to the particular product referenced in the standard or guideline, and NEMA does not undertake to guarantee the performance of any individual manufacturer's products by virtue of this standard or guide. Thus, NEMA expressly disclaims any responsibility for damages arising from the use, application, or reliance by others on the information contained in these standards or guidelines.

Copyright National Electrical Manufacturers Association
Provided by IHS under license with NEMA
No reproduction or networking permitted without license from IHS
Not for Resale

SCOPE

This publication addresses shipping, handling, storing, and installing cable tray systems. Information on maintenance and system modification is also provided.

Abbreviations used in this standard are as follows:

"in" denotes inch;
"ft" denotes foot;
"lb" denotes pound;
"mm" denotes millimeter;
"kg" denotes kilogram;
"m" denotes meter;
"N" denotes newtons;
"°F" denotes degree Fahrenheit;
"°C" denotes degree Celsius.

Copyright National Electrical Manufacturers Association
Provided by IHS under license with NEMA
No reproduction or networking permitted without license from IHS
Not for Resale

Section 1
GENERAL

WARNING!—Do not use a cable tray as a walkway, ladder, or support for people; cable tray is a mechanical support system for cables and raceways. Using cable trays as walkways can cause personal injury and also damage cable tray and installed cables.

Hazardous voltages in electrical equipment can cause severe personal injury or death. Safety related work practices, as described in NFPA 70E, Part 11, should be followed at all times.

The performance of a cable tray wiring system is dependent on its proper installation, including supports and cables. Neglecting installation and maintenance guidelines may lead to personal injury as well as damage to property.

Installation and maintenance of cable tray wiring systems shall be conducted only by qualified personnel. For the purposes of this guideline, a qualified person is one who is familiar with electrical construction. In addition, the person is:

Trained and authorized to test, energize, clear, ground, tag, and lock out circuits in accordance with established safety practices.

Trained in the proper care and use of protective equipment such as insulated rubber gloves, hard hat, safety glasses or face shields, dust mask, and flash resistant clothing in accordance with established safety practices.

--`,,`,,`-`-`,,`,,`,`,,`---

Copyright National Electrical Manufacturers Association
Provided by IHS under license with NEMA
No reproduction or networking permitted without license from IHS
Not for Resale

Copyright National Electrical Manufacturers Association
Provided by IHS under license with NEMA
No reproduction or networking permitted without license from IHS
Not for Resale

Section 2
RECEIVING AND UNLOADING

Cable tray is generally bundled and shipped via motor freight, except for export shipments that could be crated or loaded in containers. Accessories and small components are boxed and often skidded.

Cable tray can be shipped via enclosed van, trailer, or flat bed trailer. Van trailers are normally used for less than truckload (LTL) shipments. This method of shipment is most common and cost effective and offers maximum protection from the weather during shipment. LTL shipments should be hand unloaded unless provisions have been made with the cable tray manufacturer for forklift unloading.

Flat bed trailers are often used for full truckload shipments and when customers want side forklift unloading or sling unloading by crane. (Special care must be exercised using slings so cable tray is not crushed from the improper location and lifting by sling.)

CORRECT

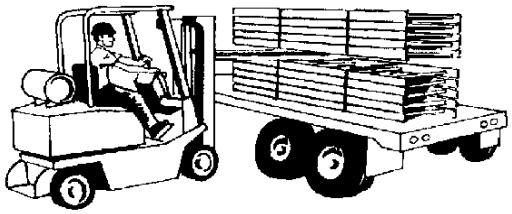

NOT CORRECT

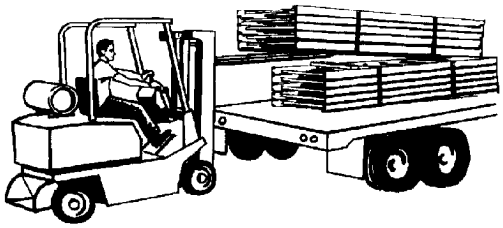

*Except when utilizing extended forks for skidded bundles

Small to medium size orders less than 2000 ft. (600 m) are generally shipped via common carrier - LTL in enclosed vans.

If hand unloaded, workers should wear gloves.

To prevent damage to cable tray, never pull cable tray from truck trailer by chaining to bottom rung and dragging out of trailer.

CORRECT

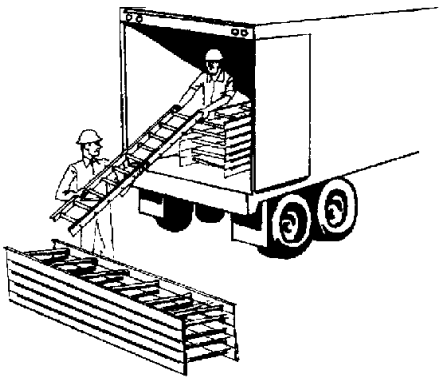

NOT CORRECT

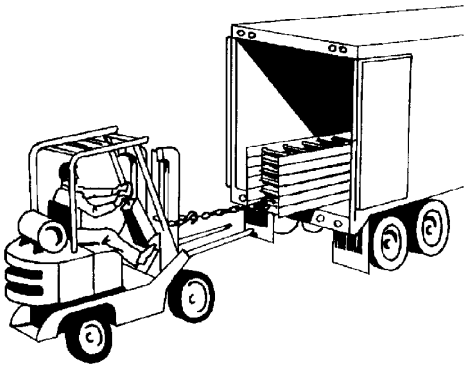

Inventory all items immediately after unloading, using the manufacturer's packing list. Note on the bill of lading any shortage or shipping damage for filing freight claim.

Copyright National Electrical Manufacturers Association
Provided by IHS under license with NEMA
No reproduction or networking permitted without license from IHS
Not for Resale

Copyright National Electrical Manufacturers Association
Provided by IHS under license with NEMA
No reproduction or networking permitted without license from IHS

Not for Resale

Section 3
STORAGE

Hot dipped galvanized after fabrication (H.D.G.A.F.) (see ASTM A 123) steel, aluminum, and stainless steel cable tray and fiberglass or other non-metallic cable tray can be stored outside without cover, but should be loosely stacked, elevated off the ground, and ventilated to prevent storage stain. If appearance is important, cable tray should be stored indoors to prevent water or other foreign materials from staining or adhering to cable tray.

Mill galvanized (see ASTM A 653) or electro-galvanized (see ASTM B 633) cable tray must be protected or stored in a well ventilated, dry location.

Bare steel cable tray should receive a protective coating as soon as possible to prevent surface rust.

PVC or painted cable tray should be protected and stored indoors if possible. Cable tray must be protected from scratching and marring of finish.

Small accessories should be stored to prevent loss.

Cable tray should be stored away from high traffic areas. Cable tray should be stacked by width and type.

-`-`-,`-`-`-,,`,`,`,,`---

Copyright National Electrical Manufacturers Association
Provided by IHS under license with NEMA
No reproduction or networking permitted without license from IHS
Not for Resale

Copyright National Electrical Manufacturers Association
Provided by IHS under license with NEMA
No reproduction or networking permitted without license from IHS
Not for Resale

Section 4
INSTALLATION

For Cable Tray Installers—This publication is intended as a practical guide for the proper installation of cable tray systems. Cable tray system design shall comply with NEC Article 318, NEMA VE 1, and NEMA FG 1, and shall follow safe work practices as described in NFPA 70E.

These instructions and information do not intend to cover all details or variations in cable tray systems nor provide for every possible installation contingency.

Construction Experience—It is recommended that the work described be performed by qualified persons familiar with standard electrical construction practices, electrical equipment, and safety of electrical wiring systems.

4.1 COMMON TOOLS FOR INSTALLATION

The following tools are commonly used for installation of cable tray:

- Metal cutting saw
- Touch-up material
- Screwdriver
- Drill with bits
- File
- Open end wrench
- Nylon cord or laser
- Sealant for cut edges (Fiberglass)
- Cutting Saw (Fiberglass) Carbide or Diamond Tipped
- Leveling device
- Tape measure
- Square
- C-clamp
- Torque wrench
- Ratchet wrench
- Offset Bolt cutters (Wire mesh)
- Dust Mask (Fiberglass)
- Appropriate safety equipment

4.2 SUPPORT INSTALLATION

Caution! Do not cut or drill structural building members (e.g. I-beams) without approval by the general contractor.

In order to install the cable tray supports, first find the required elevation from the floor to the bottom of the cable tray and establish a level line with a laser or a nylon string. A string works well because it can be used to align the threaded rods on one side of a trapeze and find the tops of the supports.

In order to speed the process of installing the trapeze hangers, some nuts may be pre-threaded onto the threaded rod to the approximate location where the nut will be needed. One method for pre-threading the nuts is to put the nuts onto the end of a piece of threaded rod, attach a drill to the threaded rod, and run the nuts up the rod holding onto them with an open-end wrench.

NOTE—Nonmetallic supports and hardware may require special load bearing considerations due to material composition and application temperature. Consult the cable tray manufacturer for recommended practices.

4.2.1 Cable Tray Supports

Caution! Supports for cable trays should provide strength and working load capabilities sufficient to meet the load requirement of the cable tray wiring system. Consideration should be given to the loads associated with future cable additions (see section 6.3) or any other additional loads applied to the cable tray system or the cable trays support system.

Copyright National Electrical Manufacturers Association
Provided by IHS under license with NEMA
No reproduction or networking permitted without license from IHS
Not for Resale

NOTE—Nonmetallic supports and hardware may require special load bearing considerations due to material composition and application temperature.

NOTE—Special consideration may be required for center-supported systems considering eccentric loading.

4.2.1.1 Trapeze Type (See Figures 4.1A through 4.1G.)

To install:

a. Thread nuts onto threaded rod approximately 2 in. (50 mm) above desired location for bottom of cable tray.
b. Slide on square washers followed by cross member and second set of square washers.
c. Thread second set of nuts onto threaded rod.
d. Move cross member so the top surface is located where bottom of cable tray run will be located.
e. Move second set of nuts up threaded rod until cross member is reached and held in place.
f. Make sure cross member is level, then move first set of nuts down threaded rod until cross member is secured in place.

In most cases, hold-down guide clamps may be mounted on either the inside or outside of the cable tray side rail. When installed on the inside of the cable tray, the clamp and/or attaching hardware should not extend above the rung.

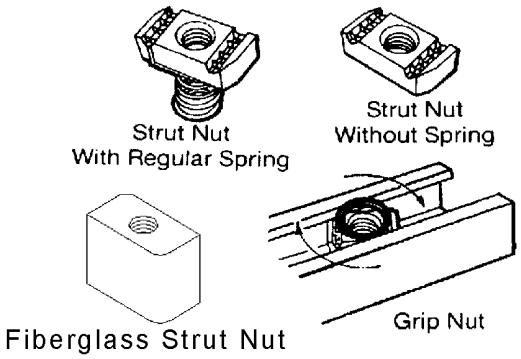

Figure 4.1A
STRUT NUT

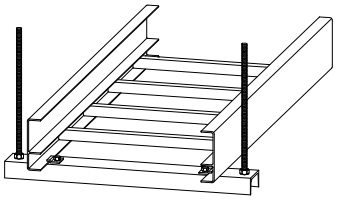

Figure 4.1B
C-CHANNEL SUPPORT

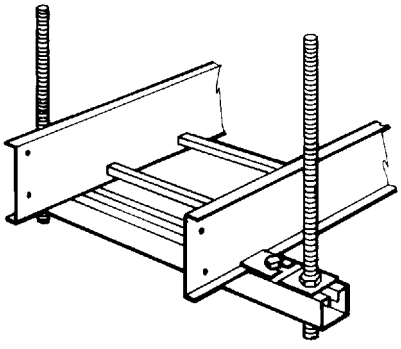

Figure 4.1C
STRUT SUPPORT

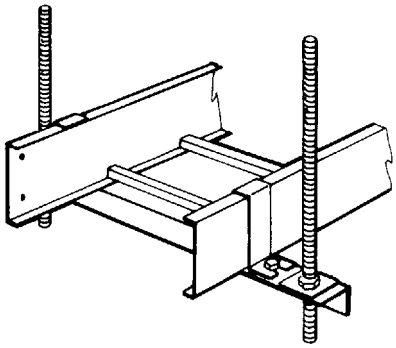

Figure 4.1D
ANGLE IRON SUPPORT

--`,`-`-`,,`,,`,`,,`---

Copyright National Electrical Manufacturers Association
Provided by IHS under license with NEMA
No reproduction or networking permitted without license from IHS
Not for Resale

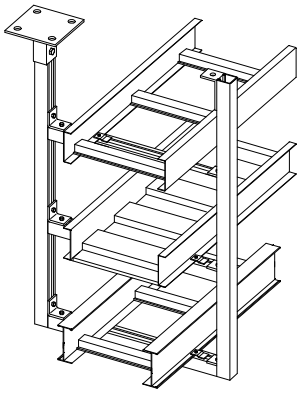

Figure 4.1E
TYPICAL STRUT SUPPORT INSTALLATION

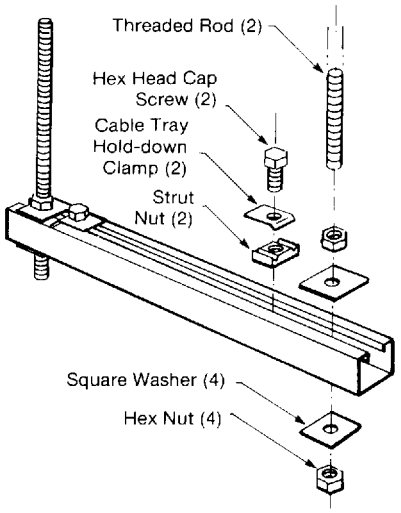

Figure 4.1F
STRUT-EXPLODED VIEW

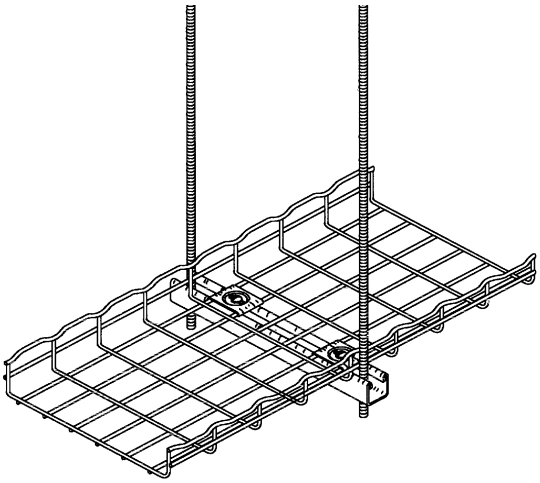

Figure 4.1G
HOLD DOWNS

4.2.1.2 Hanger Rod Clamp (See Figures 4.2A through 4.2E.)

To install:

a. Thread nuts onto threaded rod approximately 9 in. (225 mm) above desired location for bottom of cable tray.

b. Place clamp around side rail of cable tray.

c. Lift entire cable tray section onto threaded rod running threaded rod through holes in clamps.

d. Thread a second set of nuts onto threaded rod moving them up until bottom of cable tray reaches desired location.

e. Move first set of nuts down threaded rod and secure clamps in place.

Copyright National Electrical Manufacturers Association
Provided by IHS under license with NEMA
No reproduction or networking permitted without license from IHS
Not for Resale

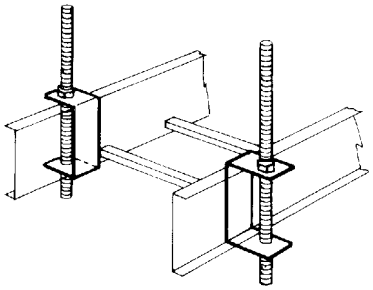

Figure 4.2A
SINGLE CABLE TRAY HANGER

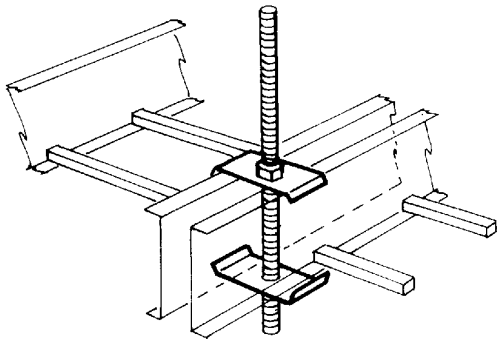

Figure 4.2B
DOUBLE CABLE TRAY HANGER

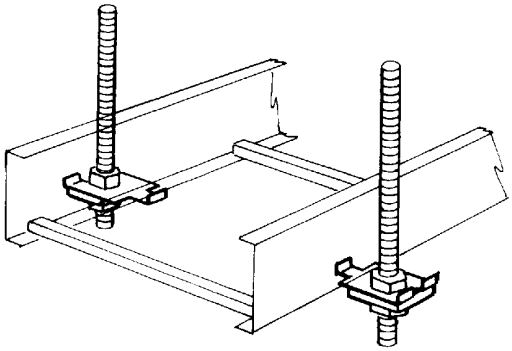

Figure 4.2C
SINGLE CABLE TRAY HANGER

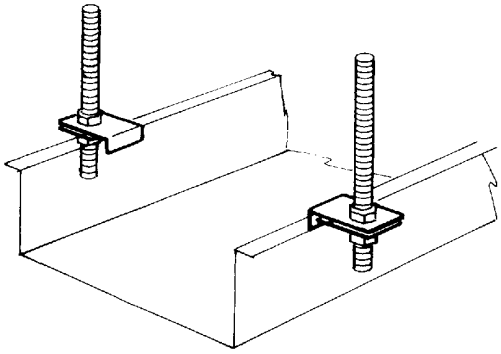

Figure 4.2D
SINGLE CABLE TRAY HANGER

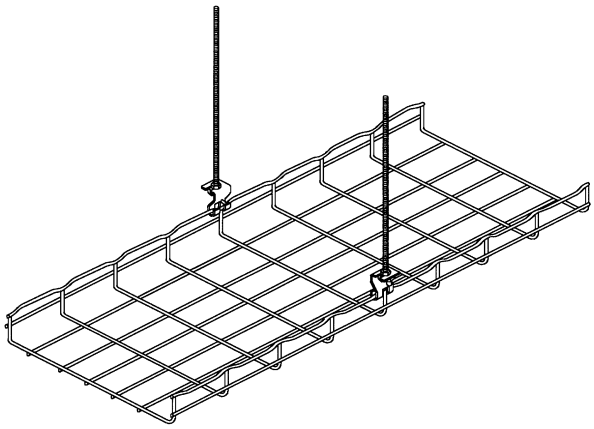

Figure 4.2E
SINGLE CABLE TRAY HANGER

Copyright National Electrical Manufacturers Association
Provided by IHS under license with NEMA
No reproduction or networking permitted without license from IHS
Not for Resale

4.2.1.3 Center Hung Support (See Figures 4.3A and 4.3B)

To install:

a. Thread nut onto threaded rod approximately 9 in. (225 mm) above desired location for bottom of cable tray.
b. Slide washer and support onto threaded rod with upright tube going through center of cable tray section needing support.
c. Place a square washer on threaded rod and thread on second nut.
d. Move cross member so its top surface is located at the place where bottom of cable tray run will be located.
e. Move second nut up threaded rod until it reaches cross member and holds it in place.
f. Move first nut down threaded rod until it secures cross member in place.

In most cases, hold-down/guide clamps may be mounted on either the inside or outside of the cable tray. When installed on the inside of the cable tray, the clamp and/or attaching hardware should not extend into the cable pathway.

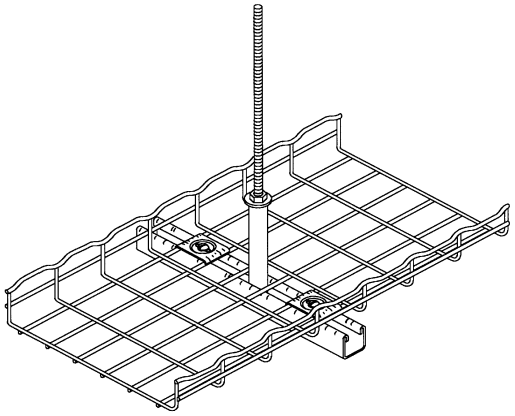

Figure 4.3A
CENTER HANGER SUPPORT

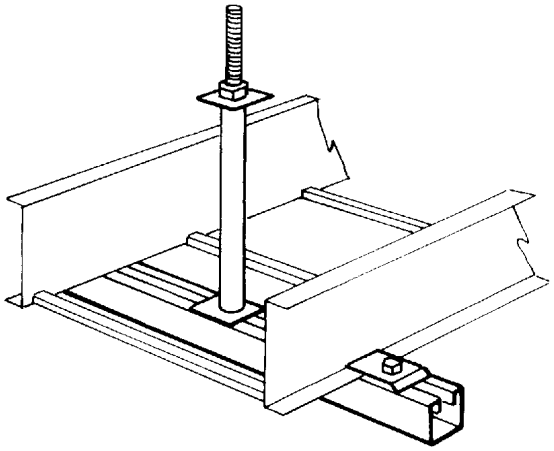

Figure 4.3B
CENTER HANGER SUPPORT

4.2.1.4 Single Channel Cable Tray Hanger (See Figure 4.4)

To install:

a. Thread nut onto threaded rod to height required.
b. Place hanger on threaded rod and follow with one nut.
c. Run nut up threaded rod until bottom of hanger is at desired height.
d. Run top nut down to tighten.
e. Place channel on hanger and secure in place as necessary.

--`,,`-`-`,,`,,`,`,,`---

Copyright National Electrical Manufacturers Association
Provided by IHS under license with NEMA
No reproduction or networking permitted without license from IHS
Not for Resale

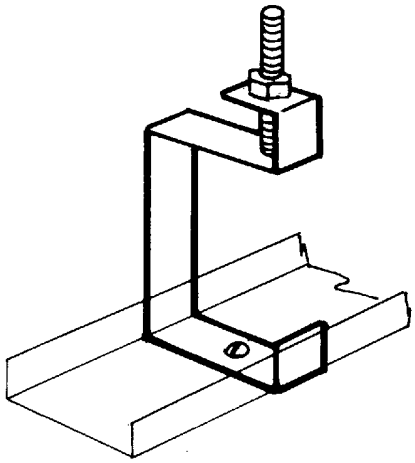

Figure 4.4
SINGLE CHANNEL HANGER

4.2.1.5 Double Channel Cable Tray Hanger (See Figure 4.5.)

To install:

a. Thread nut onto threaded rod to height required.
b. Place hanger on threaded rod and follow with one nut.
c. Run nut up threaded rod until bottom of hanger is at desired height.
d. Run top nut down to tighten.
e. Place channels on hanger and secure in place as necessary.

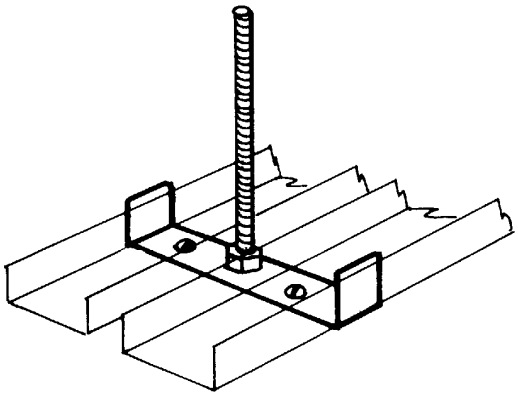

Figure 4.5
DOUBLE CHANNEL HANGER

4.2.1.6 Single Rail Cable Tray Hangers (See Figures 4.6A through 4.6C)

To install:

a. Thread nut onto threaded rod to height required.
b. Place hanger or cable tray on threaded rod and follow with one nut.
c. Run nut up threaded rod until bottom of hanger or cable tray is at desired height.
d. Run top nut down to tighten.
e. Place cable tray in hanger and secure in place as necessary.

Copyright National Electrical Manufacturers Association
Provided by IHS under license with NEMA
No reproduction or networking permitted without license from IHS
Not for Resale

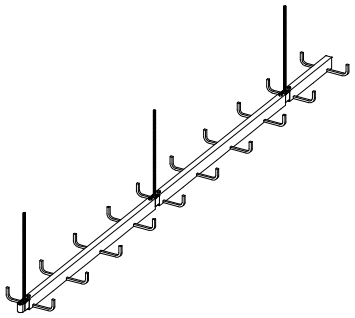

Figure 4.6A
MULTIPLE SPLICE SUPPORT

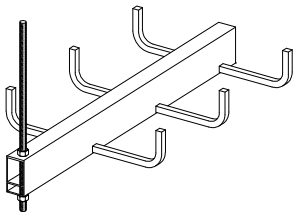

Figure 4.6B
ROD THROUGH SPINE HANGER

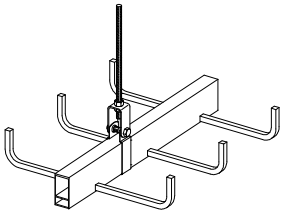

Figure 4.6C
CLEVIS HANGER

4.2.2 Wall and Cantilever Brackets (See Figures 4.7A through 4.7E.)

Secure the brackets to the structure making sure they are level and aligned with each other.

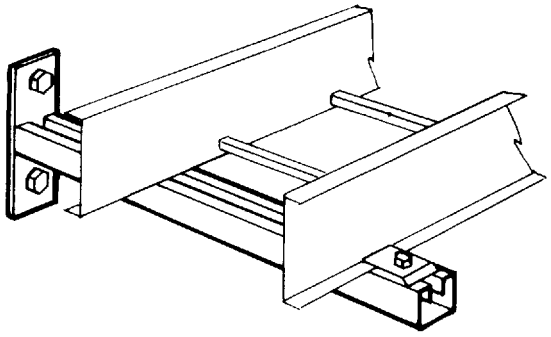

Figure 4.7A
SINGLE STRUT CANTILEVER BRACKET

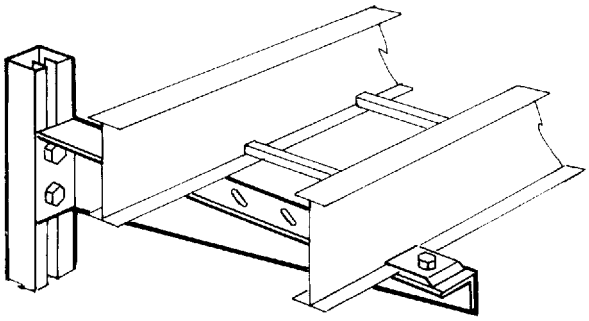

Figure 4.7B
GUSSET CANTILEVER BRACKET

Copyright National Electrical Manufacturers Association
Provided by IHS under license with NEMA
No reproduction or networking permitted without license from IHS
Not for Resale

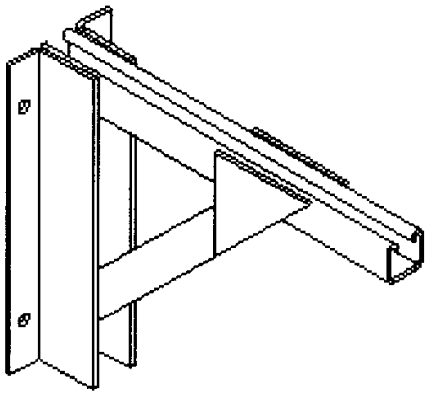

Figure 4.7C
FIBERGLASS CANTILEVER BRACKET

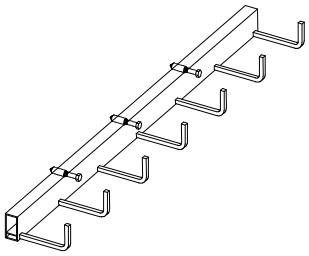

Figure 4.7D
SINGLE RAIL DIRECT WALL MOUNT

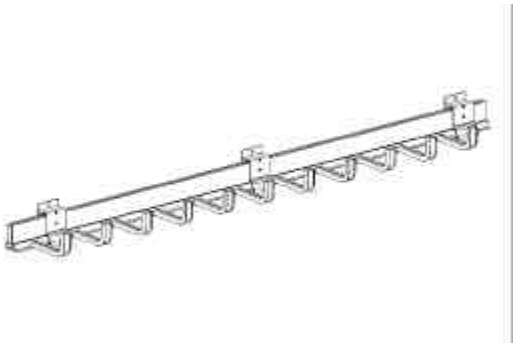

Figure 4.7E
SINGLE RAIL CLAMP WALL MOUNT

4.2.3 Floor and Roof Installations

(See Figures 4.8A through 4.8C.)

Cable tray should not be laid directly on the floor or roof. It should be mounted far enough off the floor or roof to allow the cables to exit through the bottom of the cable tray. If strut is used for this purpose, mount the strut directly to the floor or roof and attach the cable tray to the strut using hold-down clamps and/or guide clamps.

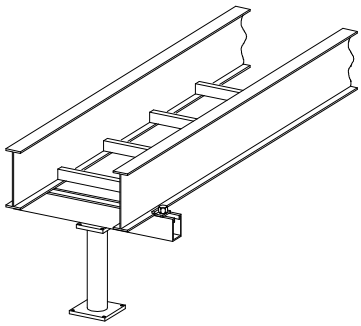

Figure 4.8A
ELEVATED STRUT TYPE SUPPORT

Copyright National Electrical Manufacturers Association
Provided by IHS under license with NEMA
No reproduction or networking permitted without license from IHS
Not for Resale

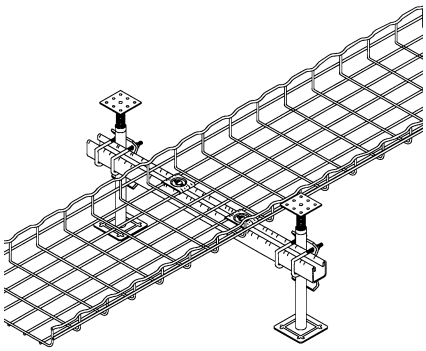

Figure 4.8B
UNDERFLOOR SUPPORT ATTACHED TO FLOOR PEDESTALS

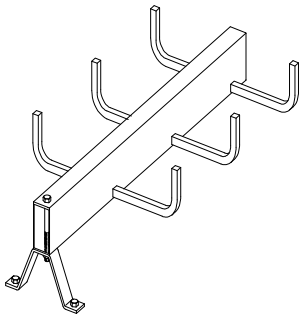

Figure 4.8C
SINGLE RAIL FLOOR SUPPORT

4.2.4 Vertical Applications (See Figures 4.9A through 4.9D.)

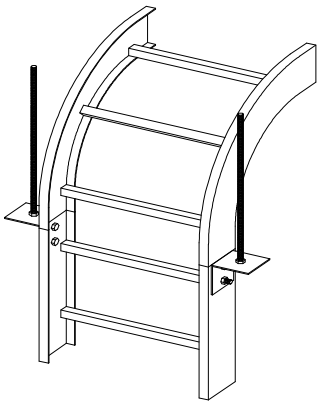

Figure 4.9A
VERTICAL THREADED ROD SUPPORT

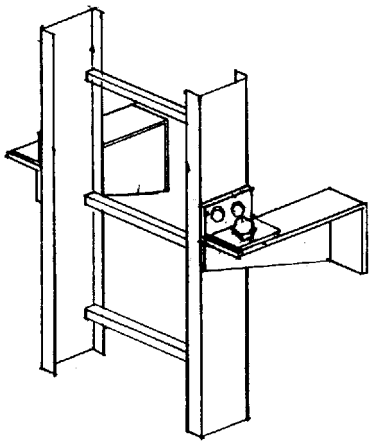

Figure 4.9B
VERTICAL GUSSET CANTILEVER SUPPORT

Copyright National Electrical Manufacturers Association
Provided by IHS under license with NEMA
No reproduction or networking permitted without license from IHS
Not for Resale

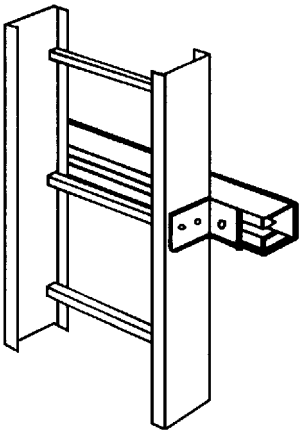

Figure 4.9C
VERTICAL STRUT SUPPORT

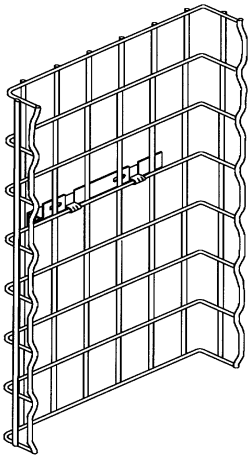

Figure 4.9D
VERTICAL WALL MOUNT

4.3 STRAIGHT SECTION INSTALLATION

Use the torque data below for fasteners. Follow manufacturer's recommendations for nonmetallic or nonferrous fasteners. Torque values do not apply for hollow sections such as tubes. Consult the manufacturer for recommendations.

Table 4-1
FASTENER TORQUE

Inch: GRD. 2 UNC		Metric: Class 5.8	
Size	**Ft-Lbs**	**Size**	**N-m**
1/4 – 20	4-6	M8 x 1.25	14-16
3/8 – 16	17-23	M10 x 1.5	26-33
1/2 – 13	42-56	M12 x 1.78	45-58

NOTES
1 Threads are not lubricated.
2 Fastener Finishes: zinc plated, cadmium plated, and stainless steel.

4.3.1 Straight Section Position

After the supports are in place, the installation of the cable tray can begin at any place that is convenient. It is not necessary to start at one end of the run. It is ideal to lay out the system so that splice joints fall between the support and the quarter point (Figure 4.10A). This maximizes the rigidity of the cable tray. For example, when installing a 12-foot long section, a support spacing of 12 ft. (3.7 m) will cause the splice joints to fall at the same position every time.

For single rail cable tray see Figures 4.6A, 4.7D, and 4.7E.

Copyright National Electrical Manufacturers Association
Provided by IHS under license with NEMA
No reproduction or networking permitted without license from IHS
Not for Resale

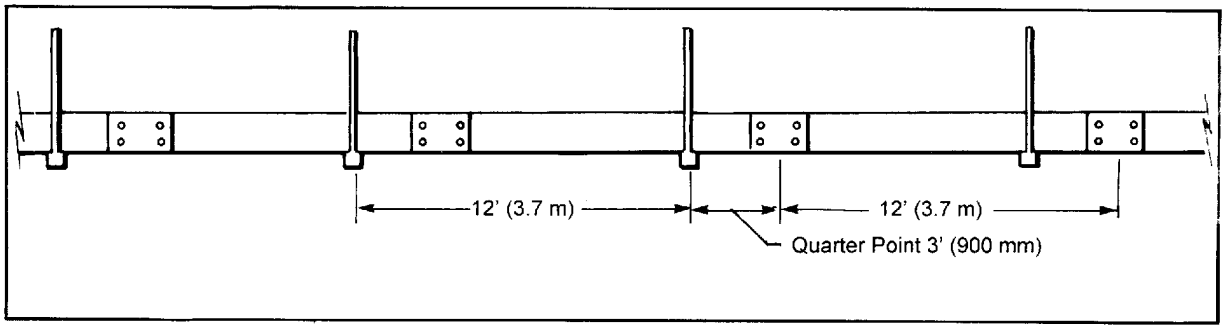

Figure 4.10A
CABLE TRAY SUPPORT LOCATIONS

To begin, place a straight section across two supports so that the ends of the section are not directly on the support (Figure 4.10B). If the support span is equal to the length of the straight sections, bolt two pieces together for this step (Figure 4.10C). ***The support span should not be greater than the straight section length or as recommended by the manufacturer, to ensure no more than one splice is located between supports.*** As a general practice, avoid placing splice plates over supports or at mid-span. However, certain cable tray systems (see Figure 4.6A) and certain splice designs allow for random splice location. See manufacturer for details.



Figure 4.10B
CABLE TRAY INSTALLATION

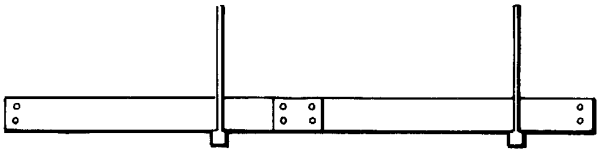

Figure 4.10C
CABLE TRAY INSTALLATION

Place the next straight section across the next support, and attach it to the previous section with a pair of splice plates and hardware. Splice plates should be placed on the *outside* of the cable tray, unless otherwise specified by the manufacturer, with the bolt heads on the *inside* of the cable tray (Figure 4.11).

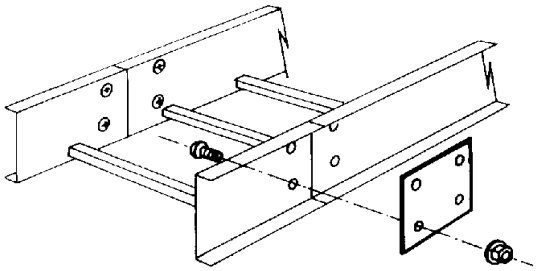

Figure 4.11
SPLICE PLATE ATTACHMENT

Copyright National Electrical Manufacturers Association
Provided by IHS under license with NEMA
No reproduction or networking permitted without license from IHS
Not for Resale

4.3.2 Expansion Splice Plates

It is important that thermal contraction and expansion be considered when installing cable tray systems. The length of the straight cable tray run and the temperature differential govern the number of expansion splice plates required (see Figure 4.12 and Table 4-2).

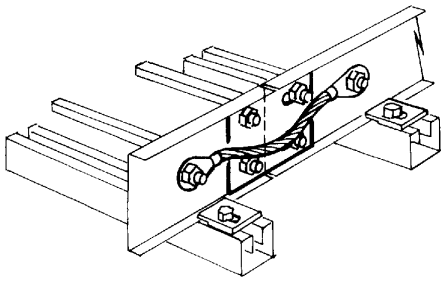

Figure 4.12
EXPANSION SPLICE PLATE ATTACHMENT

*Bonding jumper not required for fiberglass cable tray systems

Table 4-2
MAXIMUM SPACING BETWEEN EXPANSION JOINTS
THAT PROVIDE FOR ONE INCH MOVEMENT**

Temperature Differential		Steel		Aluminum		Fiberglass	
°F	(°C)	feet	(m)	feet	(m)	feet	(m)
25	(14)	512	(156)	260	(79)	667	(203)
50	(28)	256	(78)	130	(40)	333	(102)
75	(42)	171	(52)	87	(27)	222	(68)
100	(56)	128	(39)	65	(20)	167	(51)
125	(70)	102	(31)	52	(16)	133	(41)
150	(83)	85	(26)	43	(13)	111	(34)
175	(97)	73	(22)	37	(11)	95	(29)

* The temperature differential is the difference in the temperature between the hottest and coldest days of the year.

** For designs that provide for 5/8 in. (16 mm) movement (typically non-metallic), multiply maximum spacing between expansion joints by 0.625.

The cable tray should be anchored at the support nearest to its midpoint between the expansion splice plates and secured by expansion guides at all other support locations (see Figure 4.13A). The cable tray should be permitted longitudinal movement in both directions from that fixed point.

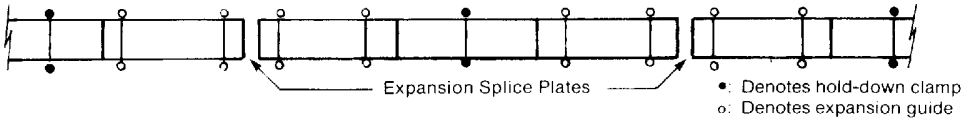

Figure 4.13A
HOLD DOWN AND GUIDE CLAMP LOCATIONS

Accurate gap setting at the time of installation is necessary for the proper operation of the expansion splice plates. The following procedure should assist the installer in determining the correct gap (see Figure 4.13B):

a. Plot the highest expected temperature on the maximum temperature line.
Example Value = 100°F (38°C)

b. Plot the lowest expected temperature on the minimum temperature line.
Example Value = -28°F (-33°C)

--`,,`,,`-`-`,,`,,`,`,,`---
Copyright National Electrical Manufacturers Association
Provided by IHS under license with NEMA
No reproduction or networking permitted without license from IHS
Not for Resale

c. Draw a line between the maximum and minimum points.

d. Plot the temperature at the time of installation to determine the gap setting. Example Value = 3/8 in. (9.5 mm), 50°F (10°C).

Special hardware is supplied with expansion splice plates. The nuts may have a stopping device (plastic stop nut). **Important**—for plastic stop nut designs, tighten hardware, and then loosen 1/2 turn. For other types of hardware, follow manufacturer's instructions.

Metal Cable tray expansion joints require bonding for electrical continuity. Refer to Section 4.7 for bonding jumper installation (see Figure 4.12).

Supports should be located within 2 ft. (600 mm) of each side of expansion splice plates.

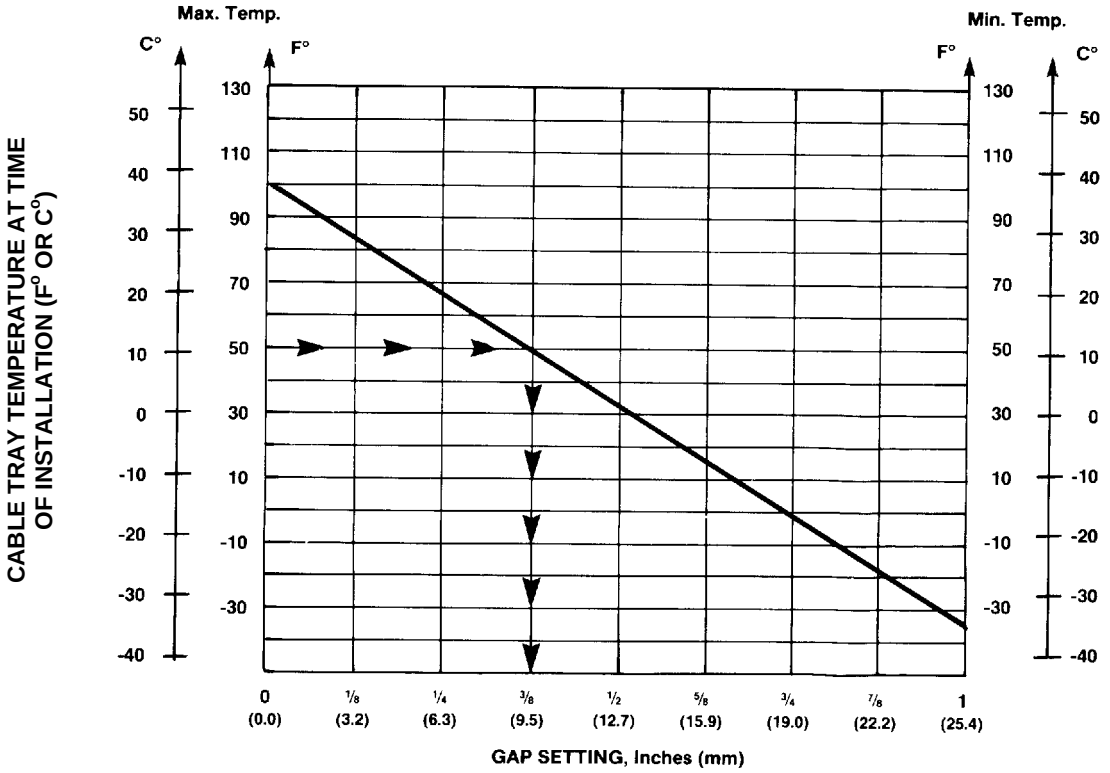

Figure 4.13B
GAP SETTING OF EXPANSION SPLICE PLATE
1 in. (25.4 mm) Gap Maximum*

*For designs using 5/8 in. (15.9 mm) maximum gap (typically non-metallic), multiply gap setting by 0.625.

4.3.3 Vertical Adjustable Splice Plates (See Figures 4.14A and 4.14B.)

For changes in vertical direction not requiring a radius, vertical adjustable splice plates can be used. Supports should be located within 2 ft. (600 mm) of each side of vertical adjustable splice plates.

a. Position splice halves so that offsets adjust for material thickness and fasten with nut and bolt using hole (A).

b. Attach to positioned cable tray sections which will set needed angle.

Copyright National Electrical Manufacturers Association
Provided by IHS under license with NEMA
No reproduction or networking permitted without license from IHS
Not for Resale

c. Drill to complete hole (B). Figure 4.14A only.

d. Insert and tighten all hardware.

For metal cable tray, bonding jumpers are required for electrical continuity, unless the splice plates meet the electrical continuity requirements of NEMA Standard VE 1. (Refer to Section 4.7 - Grounding)

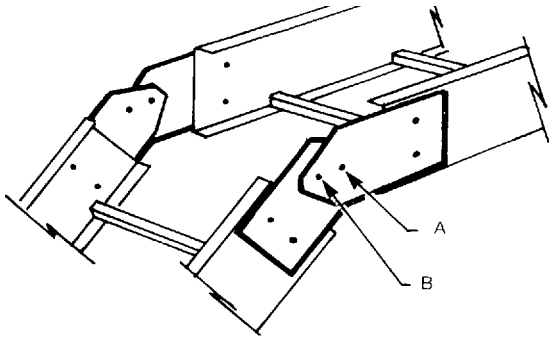

Figure 4.14A
TWO BOLT VERTICAL ADJUSTABLE SPLICE PLATES

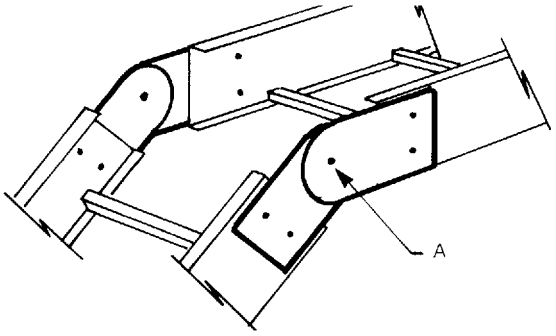

Figure 4.14B
SINGLE BOLT VERTICAL ADJUSTABLE SPLICE PLATES

4.3.4 Horizontal Adjustable Splice Plates (See Figure 4.15.)

For changes in horizontal direction not requiring a radius, horizontal adjustable splice plates can be used. Supports should be located within 2 ft. (600 mm) of each side of horizontal adjustable splice plates.

a. Connect inside connector (short piece) and position cable tray sections to set angle.
b. Position outside connector locating hinge at mid-point.
c. Drill required holes and install and tighten all hardware.

For metal cable tray, bonding jumpers are required for electrical continuity unless the splice plates meet the electrical continuity requirements of NEMA Standard VE 1 (Refer to Section 4.7 - Grounding).

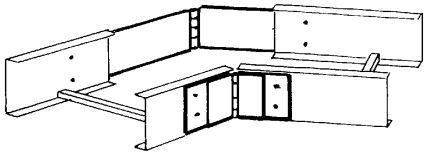

Figure 4.15
HORIZONTAL ADJUSTABLE SPLICE PLATES

Copyright National Electrical Manufacturers Association
Provided by IHS under license with NEMA
No reproduction or networking permitted without license from IHS
Not for Resale

4.3.5 Cable Tray-to-Box or Floor Splice Plates (See Figures 4.16A and 4.16B)

For termination of cable tray system to equipment or structures:

Cable trays and/or cable penetrations through partitions, walls, floors, and ceilings often require special fire rating or environmental concerns and should be handled in accordance with NEC® Articles 318 and 300.

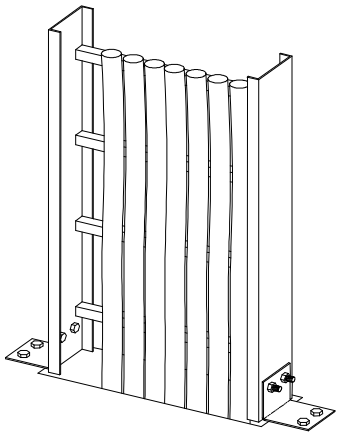

Figure 4.16A
CABLE TRAY-TO-BOX/FLOOR SPLICE PLATES

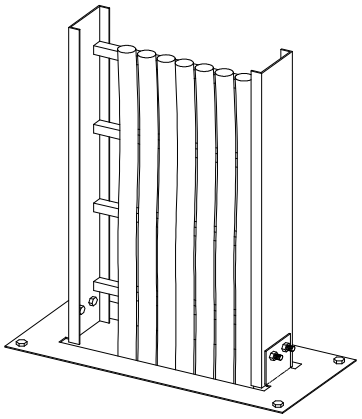

Figure 4.16B
CABLE TRAY-TO-BOX CONNECTOR

4.3.6 Offset Reducing Splice Plates
(See Figure 4.17.)

For immediate width changes, use offset reducing splice plates. Supports should be located within 2 ft. (600 mm) of each side of offset reducing splice plates.

a. Use an offset reducing splice plate with a standard splice plate to form an offset reduction.
b. Use a pair of offset reducing splice plates to form a straight reduction.

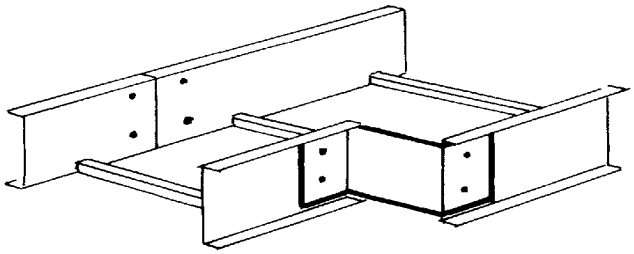

Figure 4.17
OFFSET REDUCING SPLICE PLATE

Copyright National Electrical Manufacturers Association
Provided by IHS under license with NEMA
No reproduction or networking permitted without license from IHS
Not for Resale

4.3.7 Vertical Support Plates (See Figure 4.18.)

Use vertical support splice plates for additional support of extended vertical runs. (See Section 4.2.4)

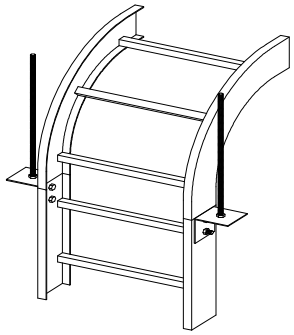

Figure 4.18
VERTICAL SUPPORT PLATES

4.3.8 Step-down Splice Plates (See Figure 4.19.)

Use step-down splice plates when connecting cable trays of different heights.

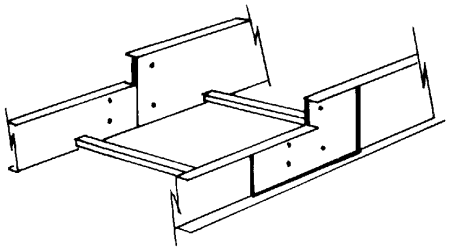

Figure 4.19
STEP-DOWN SPLICE PLATES

4.3.9 End Plates (See Figure 4.20.)

For dead-end closure indicating termination of cable tray run use end plates.

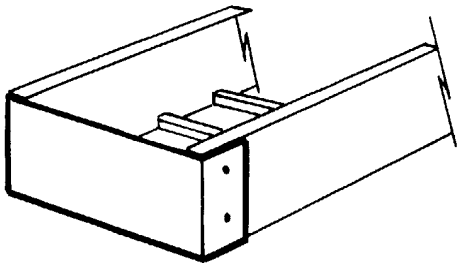

Figure 4.20
END PLATE

Copyright National Electrical Manufacturers Association
Provided by IHS under license with NEMA
No reproduction or networking permitted without license from IHS
Not for Resale

4.3.10 Single Rail Cable Tray Fitting Connectors (See Figures 4.21A through 4.21D)

Single rail cable trays typically use connector plates in lieu of radius fittings.

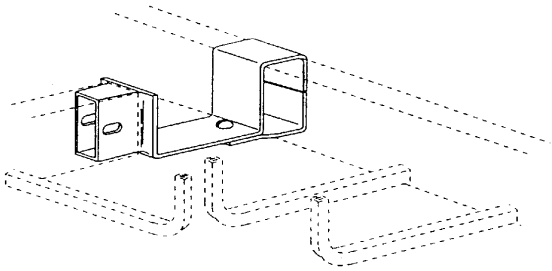

Figure 4.21A
HORIZONTAL TEE OR 90° CONNECTOR

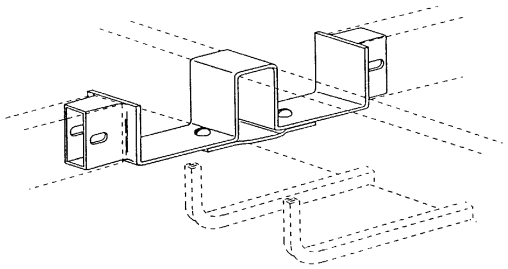

Figure 4.21B
HORIZONTAL CROSS CONNECTOR

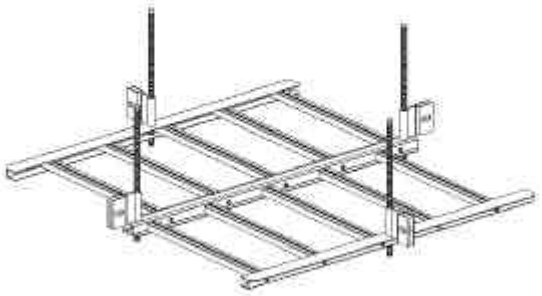

Figure 4.21C
HORIZONTAL HUB

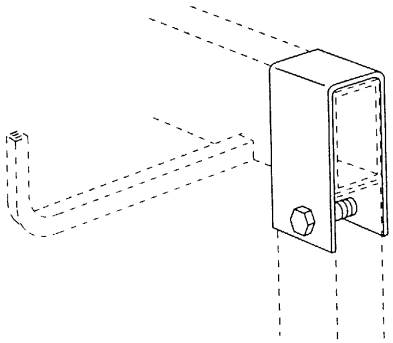

Figure 4.21D
VERTICAL TEE OR 90° CONNECTOR

Copyright National Electrical Manufacturers Association
Provided by IHS under license with NEMA
No reproduction or networking permitted without license from IHS
Not for Resale

4.4 FITTINGS INSTALLATION (See Section 4.4.3 for single rail and wire mesh cable trays)

4.4.1 Recommended Support Locations for Fittings
(unless otherwise recommended by the manufacturer)

Horizontal Elbow Support (See Figure 4.2.2)

Supports for horizontal cable tray fittings should be placed within 2 ft. (600 mm) of each fitting extremity, and as follows:

a. 90° supports at the 45° point of arc.
b. 60° supports at the 30° point of arc.
c. 45° supports at the 22-1/2° point of arc (except for the 12 in. [300 mm] radii).
d. 30° supports at the 15° point of arc (except for the 12 in. [300 mm] radii).

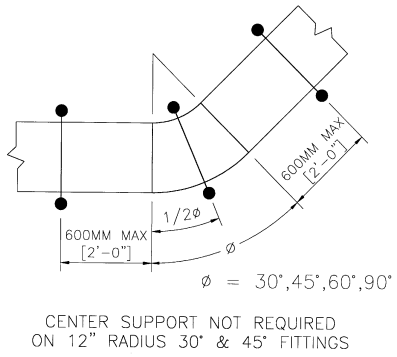

Figure 4.22
HORIZONTAL ELBOWS

Horizontal Tee Support (See Figure 4.23)

Place horizontal tee supports within 2 ft. (600 mm) of each of the three openings connected to other cable tray items for the 12 in. (300 mm) radius. On all other radii, at least one additional support should be placed under each side rail at the horizontal tee, preferably as shown.

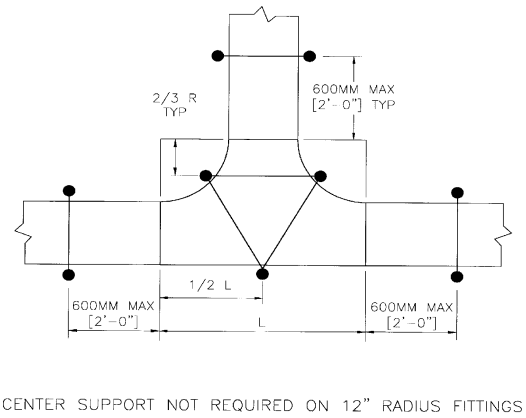

Figure 4.23
HORIZONTAL TEE

Horizontal Wye Support (See Figure 4.24)

Place horizontal wye supports within 2 ft. (600 mm) of each of the three openings connected to other cable tray items, and at 22-1/2° point of the arc adjacent to the side branch.

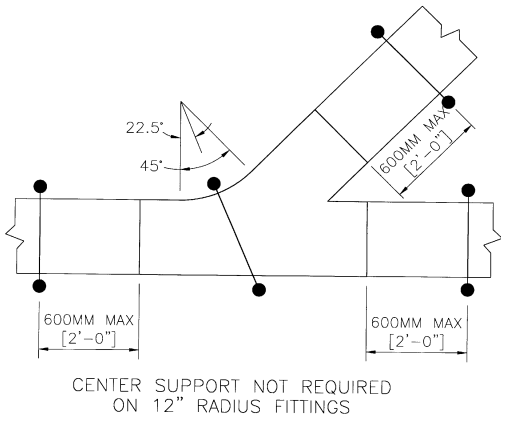

Figure 4.24
HORIZONTAL WYE

Copyright National Electrical Manufacturers Association
Provided by IHS under license with NEMA
No reproduction or networking permitted without license from IHS
Not for Resale

Horizontal Cross Support (See Figure 4.25)

Place horizontal cross support within 2 ft. (600 mm) of each of the four openings connected to other cable tray items for the 12 in. (300 mm) radius. On all other radii, at least one additional support should be placed under each side rail of the horizontal cross, preferably as shown.

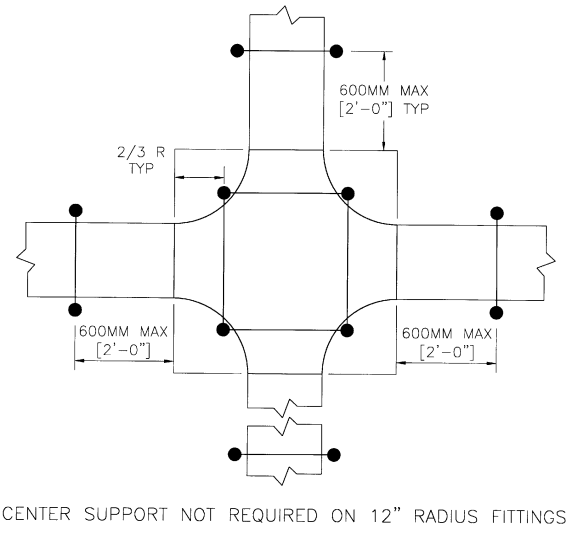

Figure 4.25
HORIZONTAL CROSS

Reducer Support (See Figure 4.26)

Place reducer supports within 2 ft. (600 mm) of each fitting extremity.

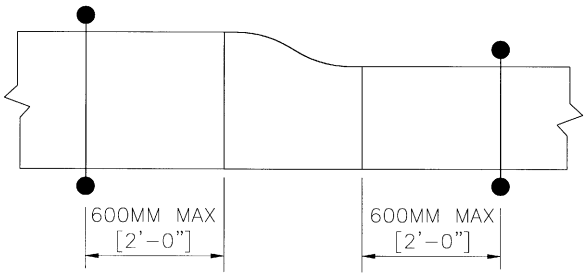

Figure 4.26
REDUCER

Vertical Cable Tray Elbows (See Figure 4.27)

Vertical cable tray elbows at the top of runs should be supported at each end. At the bottom of runs, they should be supported at the top of the elbow and within 2 ft. (600 mm) of the lower extremity of the elbows.

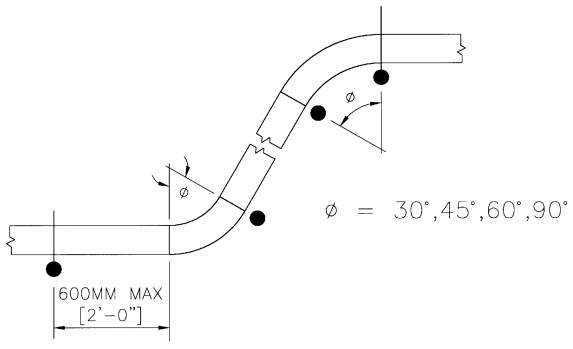

Figure 4.27
VERTICAL ELBOWS
(Side View)

--`,`-`-`,,`,,`,`,,`---

Copyright National Electrical Manufacturers Association
Provided by IHS under license with NEMA
No reproduction or networking permitted without license from IHS
Not for Resale

Vertical Cable Tray Tees (See Figure 4.28)

Vertical cable tray tees should be supported within 2 ft. (600 mm) of each fitting extremity.

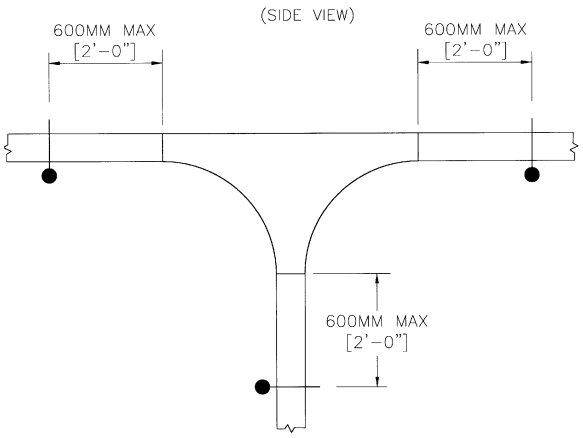

Figure 4.28
VERTICAL TEE
(Side View)

4.4.2 Cable Support Fitting (See Figures 4.29 and 4.30.)

These fittings are recommended for use at the top of long vertical runs of heavy cable to support the cables.

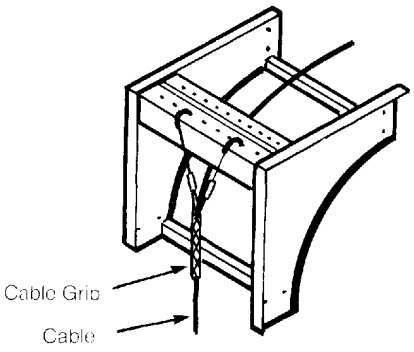

Figure 4.29
VERTICAL CABLE SUPPORT

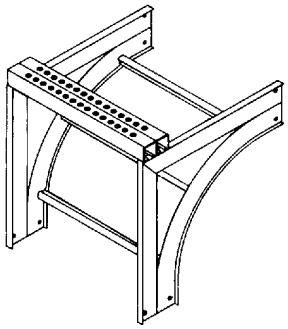

Figure 4.30
VERTICAL CABLE SUPPORT

4.4.3 Recommended Support Locations for Single Rail and Wire Mesh Cable Trays

Single rail and wire mesh cable trays have alternate support configurations. Consult manufacturer for details.

4.5 FIELD MODIFICATIONS

Eventually it will be necessary to field cut the cable tray because the length of the cable tray required will be less than standard length. If there are many cuts to be made in a given area, waste can be prevented by making a cut list, which can be used to calculate the most efficient use of the standard sections.

Cable tray field modifications shall be made by qualified personnel only.

Copyright National Electrical Manufacturers Association
Provided by IHS under license with NEMA
No reproduction or networking permitted without license from IHS
Not for Resale

4.5.1 Marking (See Figures 4.31and 4.32)

Using a square that reaches across the width of the cable tray, gauge off the edge of one side rail and mark both flanges (Figure 4.31). Next, position the square as shown in (Figure 4.32) and mark the web of the rail. Marking can be done with a scribe, marking pen, or a pencil.

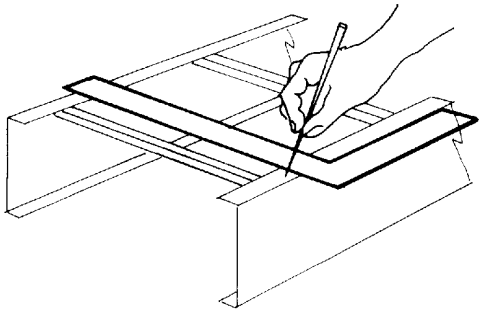

Figure 4.31
MARKING OF THE FLANGES

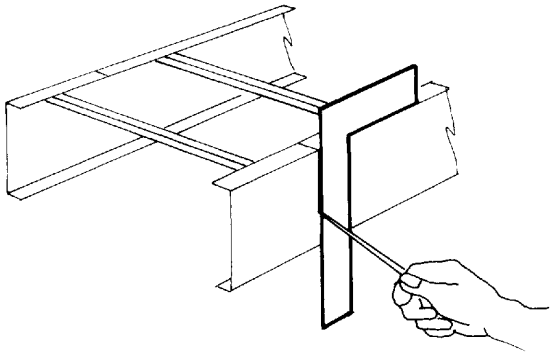

Figure 4.32
MARKING THE WEB OF THE RAIL

4.5.2 Cutting

The cut can be made using a hand held hack saw, carbide tipped circular saw, diamond dusted blades (fiberglass only), hand-held band saw, offset bolt cutters or high speed grinder (wire mesh only). It is important to get a square cut to ensure a good splice connection. Cable tray manufacturers offer jigs and other devices to aid in field cutting (Figure 4.33). After cutting, smooth the cut edges to remove any burrs. Fiberglass material should be cut with a carbide tipped circular saw or a diamond dusted blade.

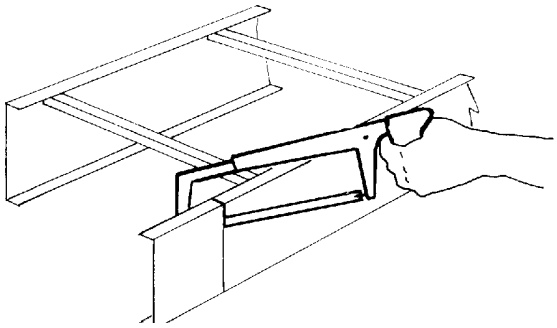

Figure 4.33A
CUTTING WITH HAND-HELD BAND SAW

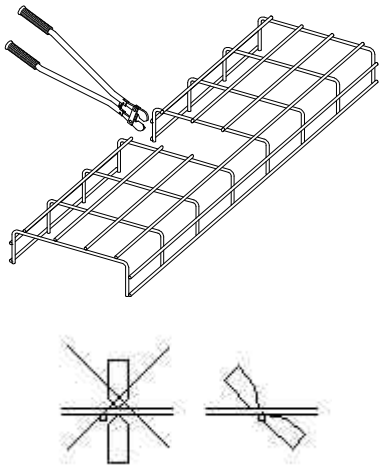

Figure 4.33B
CUTTING WITH BOLT CUTTERS

Copyright National Electrical Manufacturers Association
Provided by IHS under license with NEMA
No reproduction or networking permitted without license from IHS
Not for Resale

4.5.3 Drilling (See Figures 4.34 through 4.36.)

Holes for splice plates must be drilled in field-cut cable trays. The most common method of locating the hole positions is to use a splice plate as a template. Drill jigs (Figure 4.34) are also available. A short piece of side rail that is punched with the standard factory hole pattern can be bolted to the splice plate to serve as a stop that rests against the end of the field-cut side rail (Figure 4.35). Clamp the splice plate to the rail and drill through the splice plate holes and the side rail (Figure 4.36). The correct drill size is dependent on the hardware supplied with the cable tray. Match the holes that exist in the cable tray. After drilling, remove burrs.

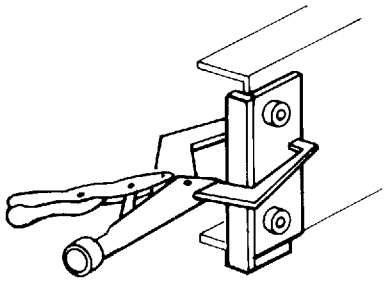

Figure 4.34
DRILLING WITH USE OF DRILL JIGS

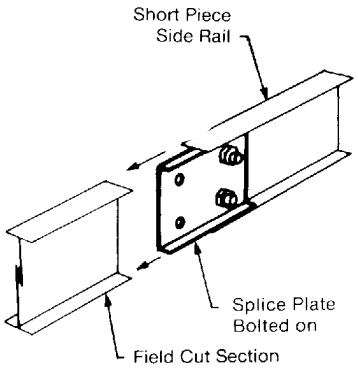

Figure 4.35
DRILLING WITH USE OF PUNCHED SIDE RAIL

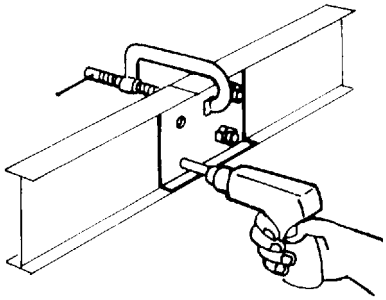

Figure 4.36
DRILLING WITH USE OF CLAMP AND SIDE RAIL

4.5.4 Finish Touch Up

Cable trays that have a hot dip galvanized coating applied after fabrication need to be retouched after cutting, drilling, or deburring or if the coating gets damaged. These cutting operations leave bare metal edges that will begin to corrode immediately. Cable trays made from mill galvanized steel do not need to be touched up because they are not designed to be used in heavily corrosive atmospheres and have bare metal edges inherent in their design. Aluminum cable trays do not need to be touched up.

Touch up of the galvanized finish must be done according to ASTM A 780, *Repair of Damaged Hot-Dip Galvanized Coatings*. Use an approved zinc-rich galvanizing material that meets the requirements of ASTM A 780. If it is not noted on the product label as to whether the material meets ASTM A 780, the material specification sheet should be obtained from the galvanizing material supplier. The paint can be applied by brushing or spraying. Always paint 1/2 in. (13 mm) to 1 in. (25 mm) beyond the bare area to prevent undercutting by corrosion.

After cutting of fiberglass cable trays, seal cut edges with manufacturer's recommended sealant.

Other protective coatings that are cut or damaged must be touched up with compatible coatings.

4.5.5 Wire Mesh Fittings Fabrication

Fittings are field fabricated from straight sections on-site with an offset bolt cutter and wrench, or high speed grinder.

Horizontal or vertical bends, tees, and crosses are fabricated by notching out segments of side rail grids and overlapping and connecting parallel wires by means of a connector.

Copyright National Electrical Manufacturers Association
Provided by IHS under license with NEMA
No reproduction or networking permitted without license from IHS
Not for Resale

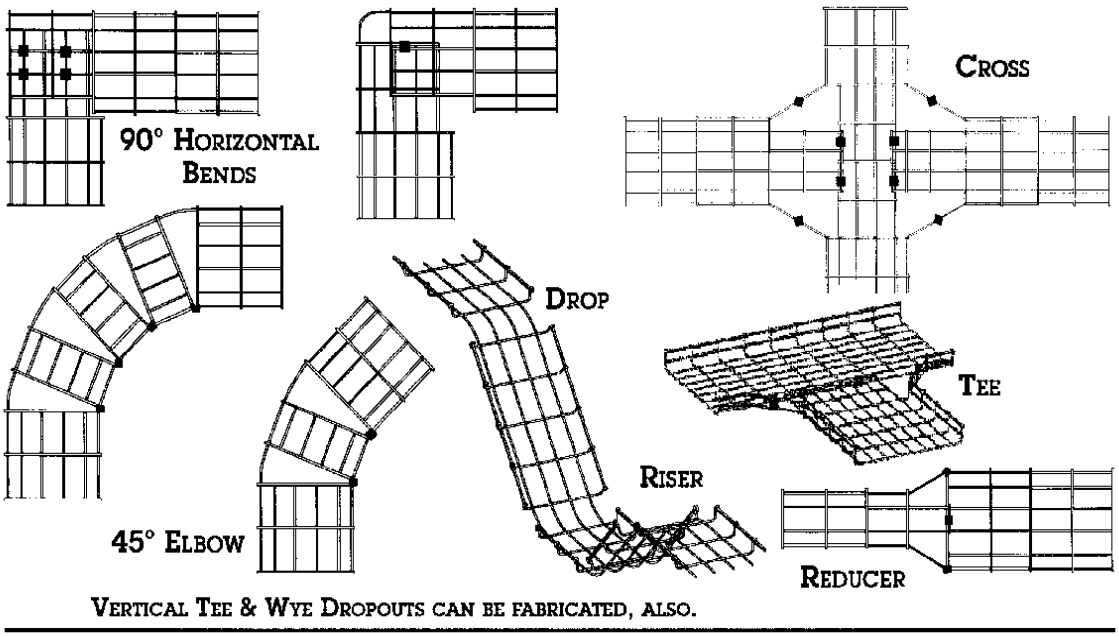

Figure 4.38
TYPICAL WIRE MESH FITTINGS—FIELD FABRICATED

4.6 ACCESSORIES

4.6.1 Barrier Strips (See Figures 4.39 through 4.46.)

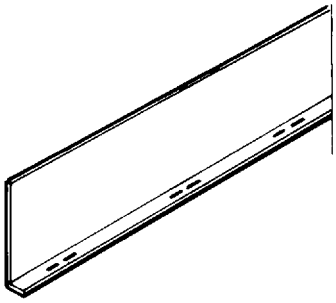

Figure 4.39
BARRIER STRIP–
STRAIGHT SECTION

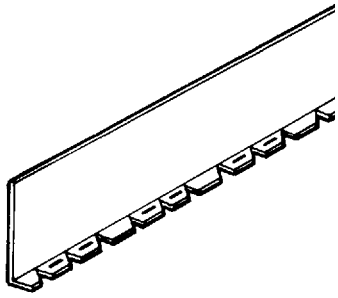

Figure 4.40
BARRIER STRIP–
HORIZONTAL FITTING

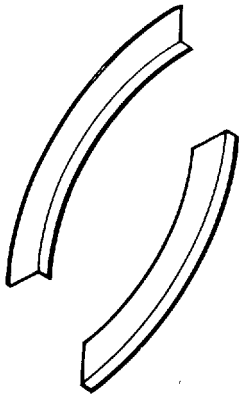

Figure 4.41
BARRIER STRIP–
VERTICAL FITTING

Copyright National Electrical Manufacturers Association
Provided by IHS under license with NEMA
No reproduction or networking permitted without license from IHS
Not for Resale

Barrier strips are sometimes used to separate cables within a cable tray as required by the National Electrical Code® (NEC®).

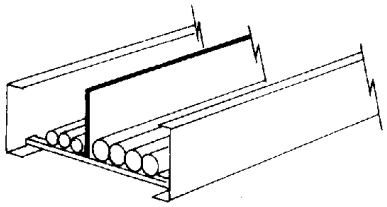

Figure 4.42
BARRIER STRIP APPLICATION

Barrier strips are installed by placing them at the desired location, then fastening them down with the hardware provided, or bonded with adhesive (fiberglass only). This connection should be made at approximately every 3 ft. (900 mm).

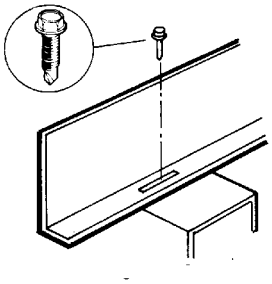

Figure 4.43
BARRIER STRIP ATTACHMENT, SELF-DRILLING AND SELF-TAPPING SCREW

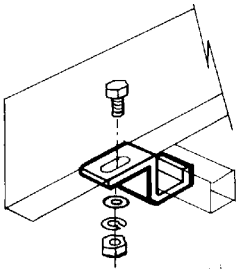

Figure 4.44
BARRIER STRIP ATTACHMENT, BARRIER CLIP

Barrier strips along a cable tray run may be connected using a barrier strip splice.

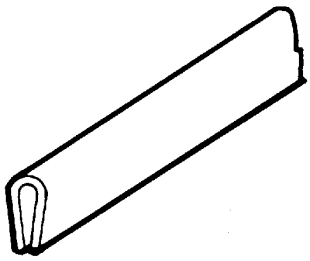

Figure 4.45
BARRIER STRIP SPLICE BARRIER

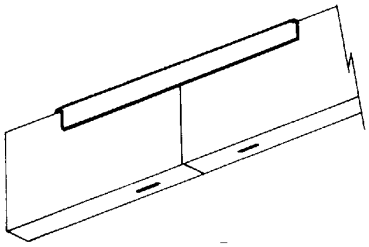

Figure 4.46
STRIP SPLICE – INSTALLED

4.6.2 Drop Outs (See Figures 4.47 through 4.49.)

The drop-outs and drop-out bushings provide a smooth surface to protect the cable insulation as it exits the cable tray.

Copyright National Electrical Manufacturers Association
Provided by IHS under license with NEMA
No reproduction or networking permitted without license from IHS
Not for Resale

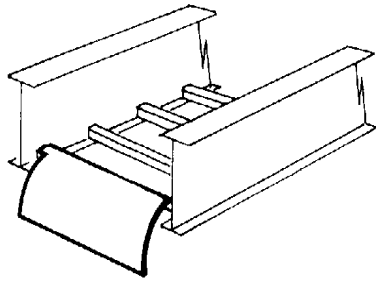

Figure 4.47
LADDER DROP-OUT

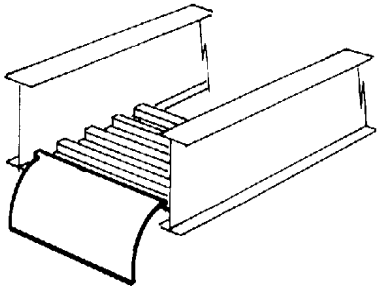

Figure 4.48
TROUGH DROP-OUT

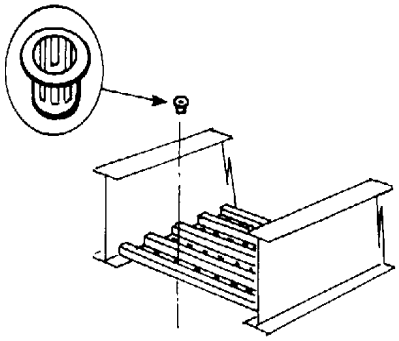

Figure 4.49
4TROUGH DROP-OUT BUSHING

4.6.3 Cable Channel-to-Cable Tray

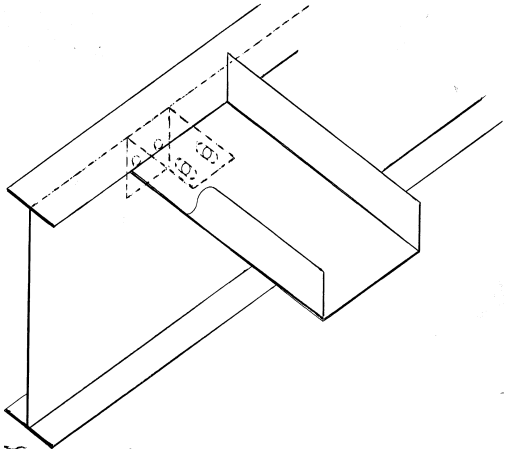

Figure 4.50
TRAY TO CHANNEL

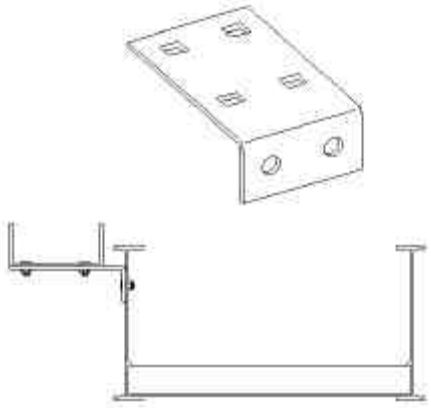

Figure 4.51
CHANNEL TO LADDER TRAY BRACKET

4.6.4 Conduit-to-Cable Tray Adaptors (See Figures 4.52 through 4.54.)

These adaptors provide for attachment of conduit that terminates at a cable tray run. If a connector is not UL listed, it only provides a mechanical connection, not an electrical connection. In order to make an electrical connection, an equipment grounding conductor must be run from the conduit to the cable tray.

Copyright National Electrical Manufacturers Association
Provided by IHS under license with NEMA
No reproduction or networking permitted without license from IHS
Not for Resale

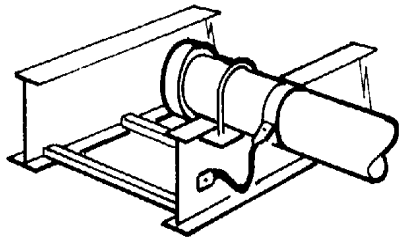

Figure 4.52
INSTALLED CONDUIT TO CABLE TRAY ADAPTER

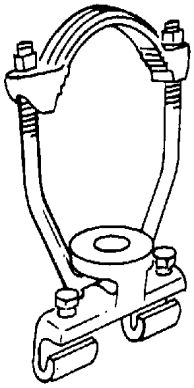

Figure 4.53
SWIVEL CONDUIT TO CABLE TRAY ADAPTER

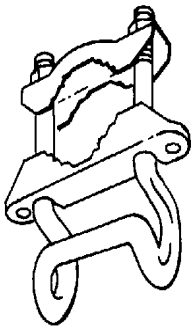

Figure 4.54
CONDUIT TO CABLE TRAY ADAPTER

4.6.5 Covers and Clamps (See Figures 4.55 and 4.56.)

Examples of cable tray covers are provided below.

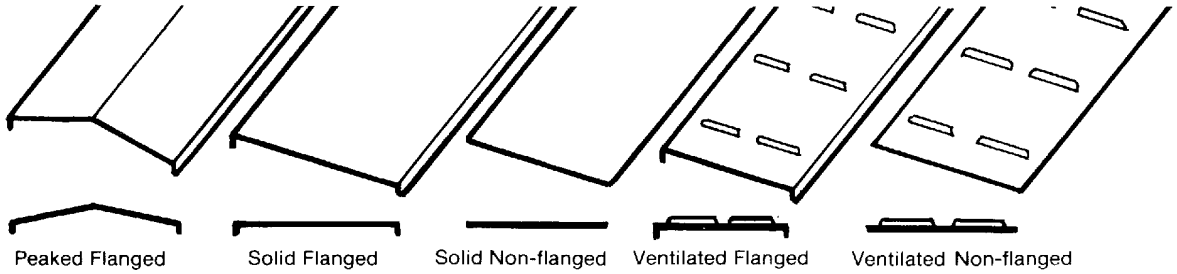

Figure 4.55
CABLE TRAY COVERS

Copyright National Electrical Manufacturers Association
Provided by IHS under license with NEMA
No reproduction or networking permitted without license from IHS
Not for Resale

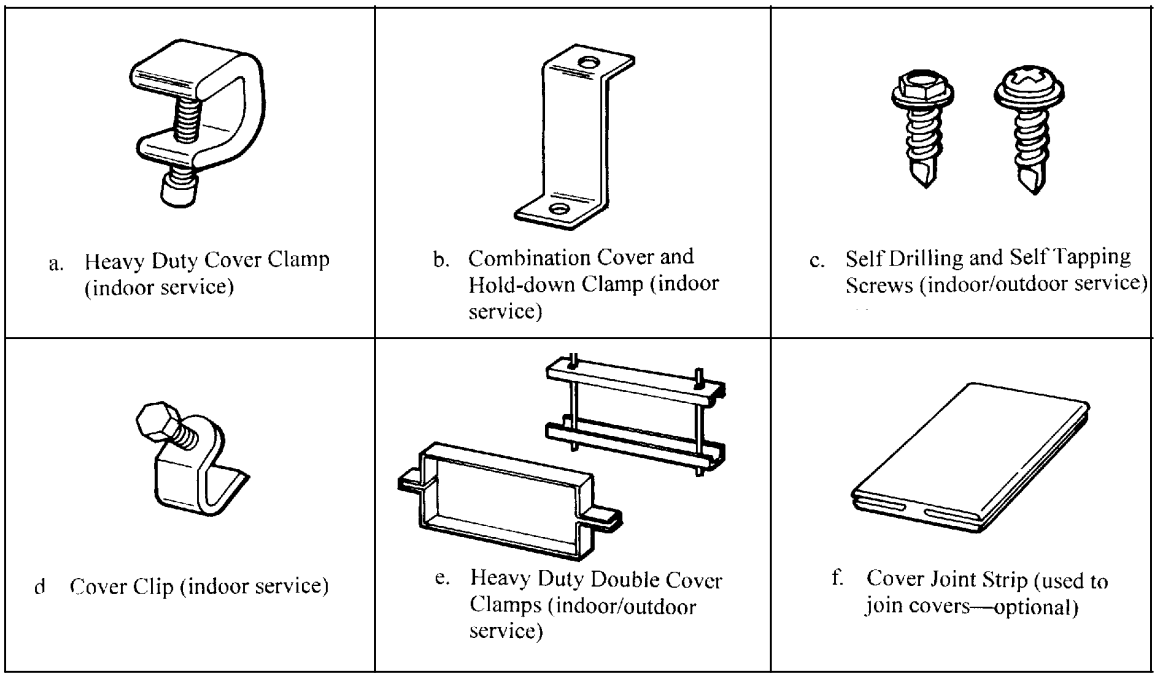

Figure 4.56
CABLE TRAY COVER CLAMPS AND ACCESSORIES

NOTE—Special consideration should be given in regards to wind loading for outdoor applications.

Table 4-3 provides information on the required spacing for cover clamps

Table 4-3
QUANTITY OF STANDARD COVER CLAMPS REQUIRED

Straight section, 6 ft. (1.8 m)	4 pieces
Straight section, 10 ft. (3.0 m) and 12 ft. (3.7 m)	6 pieces
Horizontal/vertical bends	4 pieces
Tees	6 pieces
Crosses	8 pieces

NOTE—When using the heavy duty cover clamp shown in Figure 4.56e, only half the quantity of pieces are required.

Copyright National Electrical Manufacturers Association
Provided by IHS under license with NEMA
No reproduction or networking permitted without license from IHS
Not for Resale

4.7 GROUNDING AND BONDING

Metal cable trays must be grounded and electrically continuous systems per NEC Article 318. For specific areas requiring bonding for electrical continuity, refer to Figures 4.57 through 4.60.

NOTE—Non-metallic cable trays do not serve as a conductor.

NOTE—It is recommended that wire mesh cable trays not be used as an equipment grounding conductor.

4.7.1 Cable Tray Used as an Equipment Ground Conductor (EGC) (See Figures 4.57 through 4.60)

The use of aluminum and steel cable trays is permitted as an Equipment Grounding Conductor per NEC Article 318 when labeled and marked with the available cross sectional area. (See Table 4-4.) If the cable tray is to be used as an EGC, bonding jumpers must be installed on both side rails at the locations illustrated in Figures 4.57 through 4.60, unless the splice plates meet the electrical continuity requirements of NEMA VE 1. See Table 4-5 for minimum sizes of grounding conductors.

NOTE—Although permitted by the NEC, it is recommended due to the unique nature of the product, fittings are manufactured in the field from straight sections by cutting away the current carrying structural wires, reducing the current-carrying capability of the system. As such, the use of wire mesh cable trays as an equipment grounding conductor is not recommended.

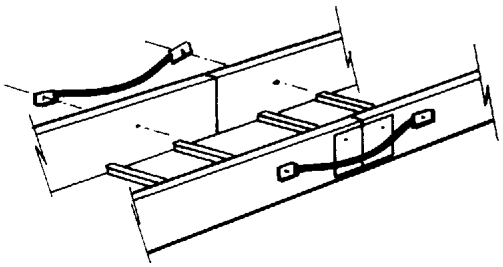

Figure 4.57
EXPANSION SPLICE PLATES

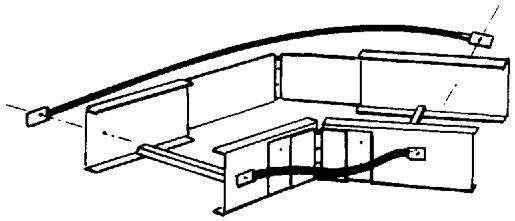

Figure 4.58
HORIZONTAL ADJUSTABLE SPLICE PLATES

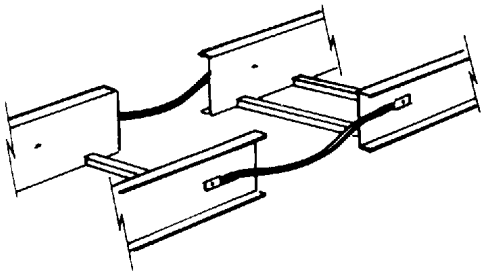

Figure 4.59
CABLE TRAY SECTIONS VERTICAL ADJUSTABLE SPLICE PLATE

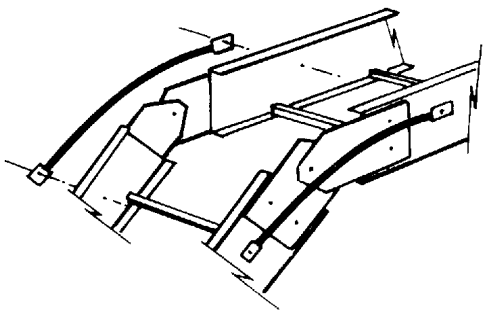

Figure 4.60
DISCONTINUOUS

Copyright National Electrical Manufacturers Association
Provided by IHS under license with NEMA
No reproduction or networking permitted without license from IHS
Not for Resale

It is not necessary to install bonding jumpers at standard rigid aluminum or galvanized steel splice plate connections or offset reducing splice plate connections.

For rigid splice plate connections of materials and finishes other than aluminum or galvanized steel, bonding jumpers may be required. For example, stainless steel splice plates require bonding jumpers.

4.7.2 Cable Trays with Separate Equipment Grounding Conductor Installed (See Figure 4.61.)

When a separate EGC cable is installed in or on cable tray, it may be bonded to the cable tray with a grounding clamp. Ground clamp styles include bolted lug types that require drilling the cable tray side rail and clamp-on styles that work like a beam clamp. One grounding clamp should be used on each straight section of cable tray.



Figure 4.61
GROUNDING CLAMPS

Bare copper EGC cable should not be used in or on aluminum cable tray. Bonding jumpers are not required if the separate EGC is properly bonded to all equipment.

4.7.3 Check for Properly Sized EGC or Bonding Jumpers

4.7.3.1 Power Applications

Bonding jumpers or separate EGC shall be sized according to NEC Articles 250 and 318. Note that NEC Table 318-7(b)(2) is the actual circuit breaker trip setting and not the maximum allowable. If the maximum ampere rating of the cable tray is not sufficient for the protective device to be used, the cable tray cannot be used as an EGC, and a separate EGC must be included in each cable or attached to the cable tray.

National Electrical Code and *NEC* are registered trademarks of the National Fire Protection Association, Inc., Quincy, MA 02269. Reprinted with permission from NFPA 70-1999, the *National Electrical Code,* Copyright 1998, National Fire Protection Association, Quincy, MA 02269. This reprinted material is not the complete and official position of the National Fire Protection Association, on the referenced subject, which is represented only by the standard in its entirety.

Copyright National Electrical Manufacturers Association
Provided by IHS under license with NEMA
No reproduction or networking permitted without license from IHS
Not for Resale

4.7.3.2 Non-Power Applications

Cable tray systems containing conductors outside the scope of NEC Article 250 (such as communications, data, signal cables, etc.) still require proper bonding and grounding for system operation and performance.

Metal trays containing these conductors shall be electrically continuous, via listed connectors or the use of an insulated #10 (minimum) stranded bonding jumper.

Electrical continuity across field fabricated wire mesh fittings can be accomplished using listed wire mesh tray connectors and following manufacturer's installation instructions.

4.7.3.3 Mixed Systems

When power conductors are installed in metallic cable tray with non-power conductors, the bonding and grounding requirements shall be as in 4.7.3.1.

NOTE—Power and non-power cables should be separated with a fixed metal barrier.

Table 4-4
METAL AREA REQUIREMENTS FOR CABLE TRAYS
USED AS EQUIPMENT GROUNDING CONDUCTORS (NEC TABLE 318-7(B)(2))

Maximum Fuse Ampere Rating, Circuit Breaker Ampere Trip Setting or Circuit Breaker Protective Relay Ampere Trip Setting for Ground-Fault Protection of any Cable Circuit In the Cable Tray System	Minimum Cross-Sectional Area of Metal* in square Inches	
	Steel Cable Trays	Aluminum Cable Trays
60	0.20	0.20
100	0.40	0.20
200	0.70	0.20
400	1.00	0.40
600	1.50**	0.40
1000	--	0.60
1200	--	1.00
1600	--	1.50
2000	--	2.00**

For Sl units: 1 square inch = 645 square millimeters.

* Total cross-sectional area of both side rails for ladder or trough cable trays or the minimum cross-sectional area of metal in channel cable trays or cable trays of one-piece construction.

** Steel cable trays shall not be used as equipment grounding conductors for circuits with ground-fault protection above 600 amperes. Aluminum cable trays shall not be used as equipment grounding conductors for circuits with ground-fault protection above 2000 amperes.

NOTE—See Section 4.7.3.1 to select separate EGC.

--`,`-`-`,,`,,`,`,,`---

Copyright National Electrical Manufacturers Association
Provided by IHS under license with NEMA
No reproduction or networking permitted without license from IHS
Not for Resale

Table 4-5
MINIMUM SIZE EQUIPMENT GROUNDING CONDUCTORS
FOR GROUNDING RACEWAY AND EQUIPMENT (NEC TABLE 250-122)

Rating or Setting of Automatic Overcurrent Device in Circuit Ahead of Equipment, Conduit, etc. Not Exceeding (Amperes)	Wire Size AWG or kcmil	
	Copper Wire Size	Aluminum or Copper-Clad Aluminum
15	14 AWG	12 AWG
20	12	10
30	10	8
40	10	8
60	10	8
100	8	6
200	6	4
300	4	2
400	3	1
500	2	1/0
600	1	2/0
800	1/0	3/0
1000	2/0	4/0
1200	3/0	250 kcmil
1600	4/0	350
2000	250 kcmil	400
2500	350	600
3000	400	600
4000	500	800
5000	700	1200
6000	800	1200

*See installation restrictions in NEC Article 250.

4.7.4 How To Install Bonding Jumpers (See Figure 4.62.)

Types of typical jumpers (always size jumpers to meet above NEC tables) include insulated, bare, and braided or laminated.

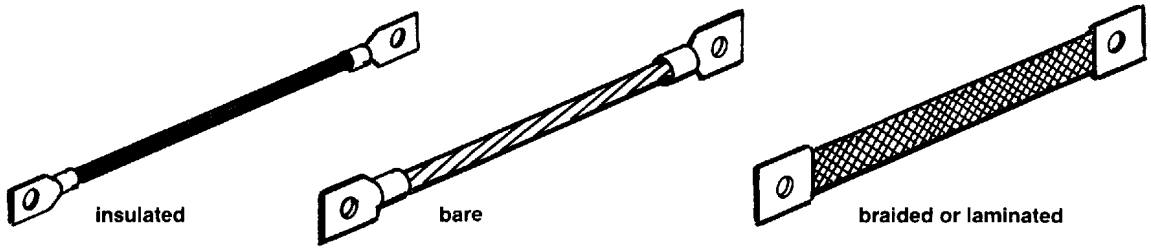

Figure 4.62
BONDING JUMPERS

--`,`-`-`-,,`,,`,`,,`---
Copyright National Electrical Manufacturers Association
Provided by IHS under license with NEMA
No reproduction or networking permitted without license from IHS
Not for Resale

Drill holes in side rail 2 in. (50 mm) from each end of the splice plate so the jumper will span the discontinuity. Do not use splice plate bolt locations to connect jumper to cable tray.

Place screw head on inside of cable tray, put jumper on outside of cable tray, add flat washer, and locknut, and tighten.

4.8 BONDING TO BUILDING STEEL AND EARTH

Metallic cable trays shall be bonded to building steel and earth as supplemental grounding for ground fault protection and signal grounding (“noise” prevention). The tray shall be bonded to building steel and earth, at least every 60 ft. This is only required when the cable tray system is not inherently bonded (connected) to building steel and earth through metallic support systems.

Copyright National Electrical Manufacturers Association
Provided by IHS under license with NEMA
No reproduction or networking permitted without license from IHS
Not for Resale

Section 5
INSTALLATION OF CABLE

The text of this section has been provided by NEMA wire and cable manufacturers. The Metal and Nonmetallic Cable Tray Section hereby acknowledges the Wire and Cable Section's cooperation and contribution.

5.1 GENERAL

This section offers some general guidelines or rules of thumb on the installation of cable in cable tray. This information is not intended to replace the recommendations of the cable manufacturer. The manufacturer of the product is the best source for information on the product, its use, and installation practices.

5.2 HANDLING AND STORAGE

To avoid personal injury or damage to the cable and reels, follow guidelines below on handling and storage of cable upon receipt at the job site.

a. Inspect all reels upon receipt for proper material and any type of damage. Be sure to note any damage on the receiving papers.

b. Do not allow the reels to drop from the delivery truck during the unloading process. When a forklift is used, the forks must support both reel flanges. Reels can be hoisted by lifting on a metal shaft of sufficient size and strength placed through the center hole of the reel. Handling equipment must not come in contact with the cable.

c. Reels may be marked with a directional arrow and phrase such as "Roll This Way" to indicate the proper direction to roll the reel. Reels should only be rolled in the direction shown, or in the direction opposite to the direction that the cable is wrapped on the reel. Rolling reels in the wrong direction can cause the cable to loosen on the reel, which may cause problems during cable de-reeling or installation. Do not allow reels to roll uncontrolled as they may roll into objects, damaging the cable or causing personal injury. When rolling reels down inclines, the incline should be as gradual as possible, and control of the reel must be maintained.

d. Use care when choosing a location for cable storage. The temperature of the storage location should be 14°F (-10°C) or higher. Select an area that is remote from construction activity, where the cable will be protected from equipment, falling objects, excessive heat, or cold, chemicals, etc., resulting in potential damage. Cable reels should be stored indoors on a dry surface or, if stored outdoors, placed on suitable dunnage of sufficient size to support the reel weight without sinking or allowing the reels to come in contact with moisture. Reels stored outside (prior to and after installation) should be covered with weatherproof material to protect reels and cable from sunlight and moisture, and cable ends must be kept sealed and should remain fastened to the reel flange to prevent them from laying on the ground. Reels should never be stored or stacked on their sides. Store reels on their flanges, properly chocked to prevent rolling. Be sure to allow enough room between reels to allow access to the reels for removal.

5.3 CABLE TRAY PREPARATION

Prior to installing cable in the cable tray, examine cable paths to ensure all areas are free of debris that may interfere with the cable's installation. The cable tray should never be used as a walkway.

5.4 CABLE PULLING CONSIDERATIONS (See Figure 5.1)

Most cable installations require the use of cable pulling tools.

Copyright National Electrical Manufacturers Association
Provided by IHS under license with NEMA
No reproduction or networking permitted without license from IHS
Not for Resale

a. On horizontal straight runs, the cables generally ride on rollers mounted in or on the cable tray (See Figure 5.4). These rollers should be properly spaced dependent on the size and weight of the cable to prevent the cable from sagging and dragging in the cable tray during the pull. Contact the cable manufacturer for information regarding proper roller spacing.

b. On horizontal bends and vertical pulls, the cables are generally run through pulleys or sheaves to maintain a minimum bending radius (See Figures 5.5 and 5.6). Pulleys and sheaves must be of sufficient diameter to prevent pinching the cable between the pulley flanges. Each cable will have a minimum bending radius that must be maintained to prevent damage to the cable. Contact the cable manufacturer for the proper minimum bending radius. Multiple pulling tools may be required at one bend to maintain this radius. Be careful with the entry and exit angle of the cable at the pulling tool, as this angle can exceed the bending radius.

c. Due to the length of some cable pulls and the cable weight, a great deal of force can be applied to the pulleys on horizontal and vertical bends. These pulleys should be anchored to the structural steel and not to the cable tray due to the force that can be applied during pulling. Do not pull down on the horizontal rollers, as they are not designed for this purpose, and damage could result to the cable or cable tray.

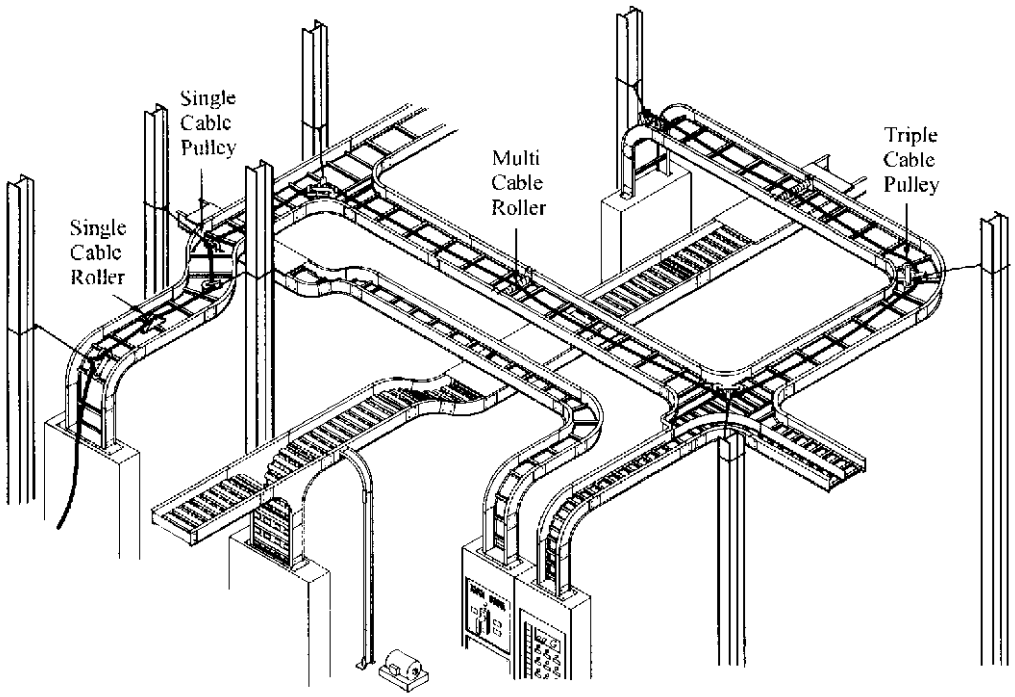

Figure 5.1
CABLE INSTALLATION

5.5 PULLING THE CABLE

Larger cables will usually require a basket grip and/or pulling eye to be attached to the leading end of the cables metallic conductor(s). If your cable does not have a pulling eye attached by the manufacturer, contact the cable manufacturer for information on field installation of a pulling eye and/or basket grip (see Figures 5.2 and 5.3). Where pulling attachments are used on the conductors, cover them with rubber-like or plastic tapes to prevent scoring of the cable trays and installation sheaves during a conductor pull. The reel will generally be placed on reel jacks with an axle of sufficient size and strength to allow the reel to turn freely with a minimum of friction. Since cables have pulling tension restrictions, a dynamometer may

Copyright National Electrical Manufacturers Association
Provided by IHS under license with NEMA
No reproduction or networking permitted without license from IHS
Not for Resale

be installed at the pulling end and the readings recorded with every pull to assure that the cable's maximum pulling tension is not exceeded. Communications should be established between the pulling end of the run and the reel end of the run. The cable should be pulled at a constant speed during the pull. Contact the cable manufacturer for maximum pulling tension and cable pulling speed. Be sure to have adequate personnel available at the reel end to aid in feeding the cable, watching to prevent cables from getting crossed and for reel braking if necessary. Be sure to pull enough cable to allow for removal of pulling eyes or basket grips and resealing of the cable ends and connections. Once the cable is installed, the cable must be removed from the pulling devices and laid in the cable tray. Do not allow the cables to drop in the cable tray as this may damage the cable and/or the cable tray. If cable connections will not be made immediately, the pulling eye or basket grip should be removed and all cable ends resealed to prevent moisture from entering the cable.

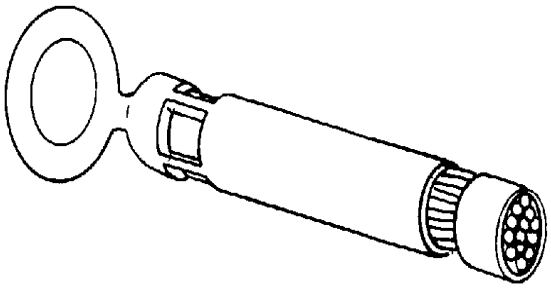

Figure 5.2
PULLING EYE

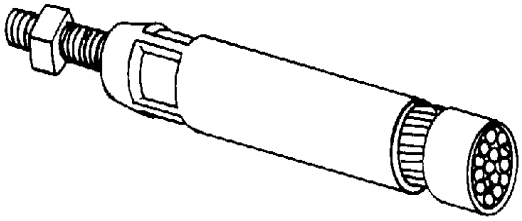

Figure 5.3
PULLING BOLT

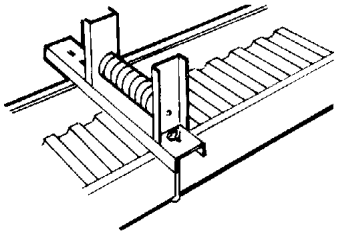

Figure 5.4
STRAIGHT ROLLER (TOP MOUNTED)

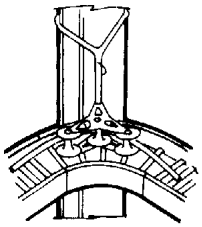

Figure 5.5
TRIPLE PULLEY GUIDE

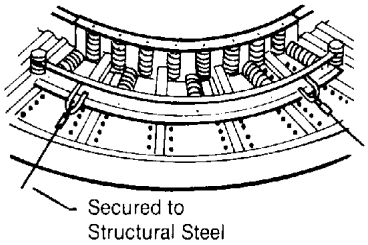

Figure 5.6
90° ROLLER

5.6 FASTENING OF CABLES

a. Cables may be fastened to the cable tray by means of cable clamps or cable ties (See Figures 5.7 and 5.8). Generally, cables are fastened every 18 in. (450 mm) on vertical runs. Although not required by the NEC, single conductor cables can be fastened on horizontal runs to maintain spacing, prevent movement due to a fault current magnetic forces, and insure that the cable is confined within the cable fill area. When using cable clamps, the clamps should be sized correctly and only tightened enough to secure the cable without indenting the jacket. The same precaution should be observed with cable ties, and they should be applied with a pressure limiting device.

Copyright National Electrical Manufacturers Association
Provided by IHS under license with NEMA
No reproduction or networking permitted without license from IHS
Not for Resale

b. Extremely long vertical drops introduce a new set of problems requiring special considerations. The weight per foot of the cable multiplied by the number of feet in the vertical drop will, in many cases, exceed the load carrying capacity of the cable tray component, such as the one or two rungs supporting this weight, and could exceed the allowable cable tension. The cable weight should be supported in such a manner as to prevent damage to the cable tray or cable during this type of installation. As the cable is installed, intermediate supports should be installed on the vertical drop to break the cable load into segments supported at multiple places.

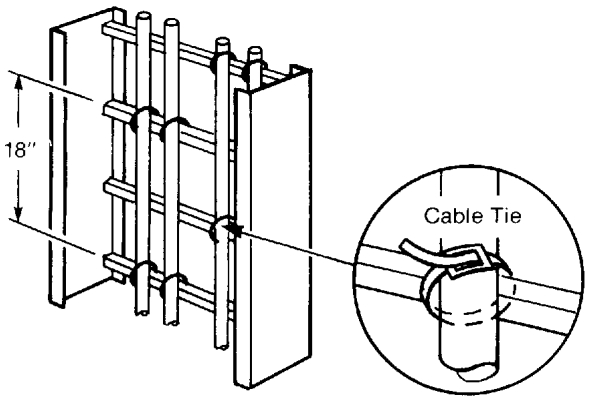

Figure 5.7
CABLE TIES – VERTICAL APPLICATION

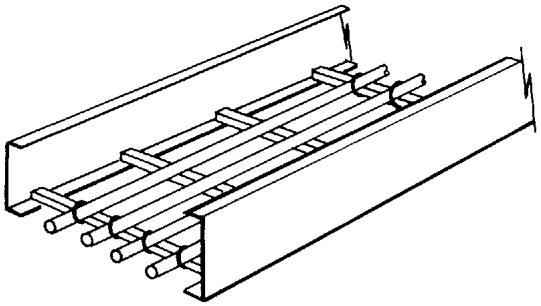

Figure 5.8
CABLE TIES – HORIZONTAL APPLICATION

5.7 PROTECTING INSTALLED CABLE

Once the cable is installed in an open cable tray system, care must be taken to protect the exposed cables from falling objects or debris that could cause damage to the cable. In areas where the cable tray is to be covered, the covers should be installed as soon as possible. Temporary protection for the cables and cable tray can be constructed of available wood or metal materials until the risk of damage is over.

Copyright National Electrical Manufacturers Association
Provided by IHS under license with NEMA
No reproduction or networking permitted without license from IHS
Not for Resale

Section 6
MAINTENANCE

WARNING—No electrical apparatus should be worked on while it is energized. When it is necessary to work in the vicinity of energized cables, all safety precautions should be followed, such as described in NFPA 70B. If cables are to be touched or moved, they should be de-energized.

6.1 INSPECTION

While cable tray is virtually maintenance free under normal conditions, inspection of the cable tray is recommended as part of the facility's routine maintenance schedule for electrical equipment. Cable tray should be inspected and serviced by qualified personnel.

Visual checks should be made for loose bolted connections at joints and bonding areas. Tighten all hardware in suspect areas.

Visual checks should be made for deposits of dust, foreign objects, and debris. These items should be removed to improve ventilation and reduce potential fire hazard.

Inspect cable tray after any severe weather including high winds, seismic disturbances, or other abnormal occurrences.

6.2 INACTIVE OR DEAD CABLES

It is considered good cable and wire management practice to remove inactive or dead cables from the cable tray wiring system. This practice opens capacity in the cable tray wiring system for future cable needs and eliminates the frustrations of electricians trying to establish the routing of an inactive cable.

6.3 ADDING CABLES

When additional cables are to be added to the cable tray wiring system, refer to NEC Article 318 for allowable fill and NEMA Standard VE 1 and FG 1 for allowable load. Check adequacy of supports before installing additional loads.

Follow cable manufacturer's recommended procedure for pulling and installing cables. (Also see Section 5 of this publication.)

--`,,`,,-`-`,,`,,`,`,,`---

Copyright National Electrical Manufacturers Association
Provided by IHS under license with NEMA
No reproduction or networking permitted without license from IHS
Not for Resale

--`,`,`-`-`,,`,,`,`,,`---

Copyright National Electrical Manufacturers Association
Provided by IHS under license with NEMA
No reproduction or networking permitted without license from IHS

Not for Resale

Appendix A
TYPICAL CABLE TRAY TYPES

Cable Ladders

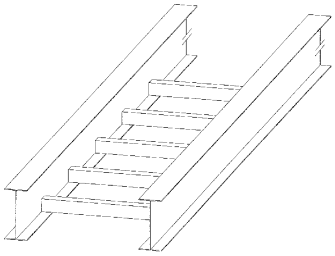

I- Beam

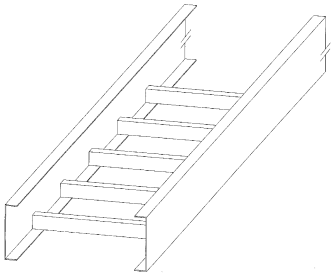

C-Channel Flange In

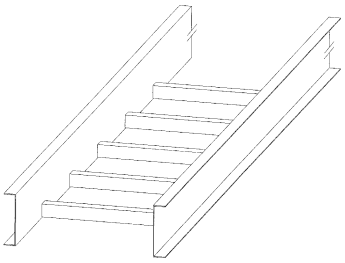

C-Channel Flange Out

Single Rail Cable Trays

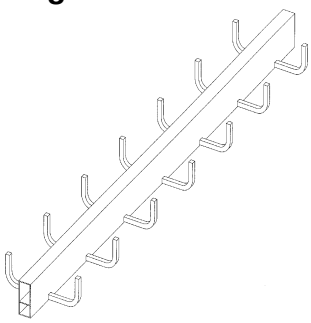

Center Rail Cable Tray

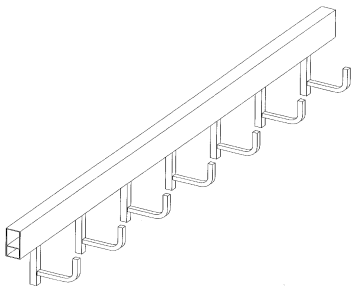

Single Tier Wall Mount

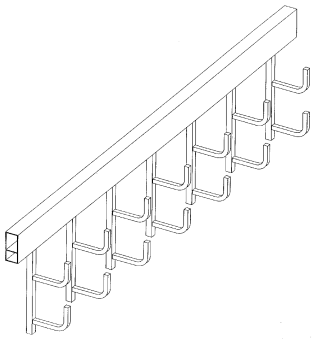

Multi-Tier Wall Mount

Solid Bottom Cable Trays

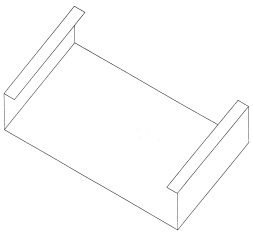

Pan Flange In

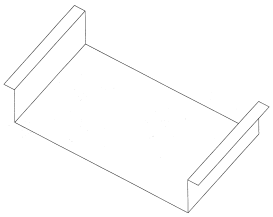

Pan Flange Out

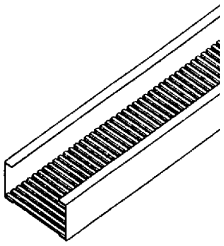

Corrugated Bottom

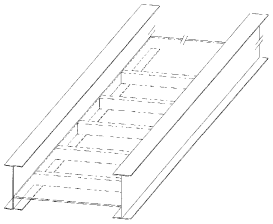

Solid Sheet on top of Ladder Rung

Copyright National Electrical Manufacturers Association
Provided by IHS under license with NEMA
No reproduction or networking permitted without license from IHS
Not for Resale

Trough (Ventilated Cable Trays)

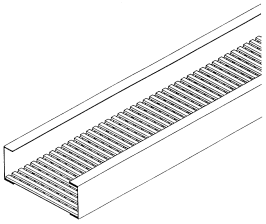

Corrugated Bottom with Holes

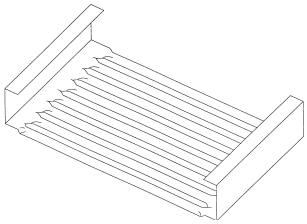

Pan with Louvers

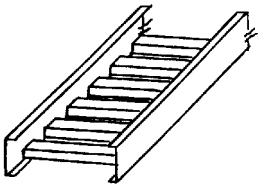

Tray with Close Rung Spacing

Wire Mesh Cable Tray

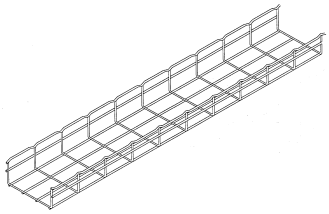

Wire Mesh

Channel Cable Trays

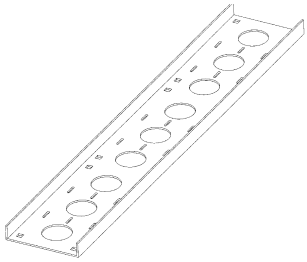

Ventilated Bottom

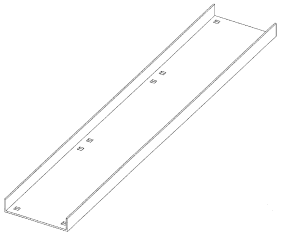

Solid Bottom

Copyright National Electrical Manufacturers Association
Provided by IHS under license with NEMA
No reproduction or networking permitted without license from IHS
Not for Resale