VE 1-84 6470247 0004521 5
A-07-09

STANDARDS PUBLICATION/NO. VE 1-1984

nema

Metallic Cable Tray Systems

NEMA

NATIONAL ELECTRICAL MANUFACTURERS ASSOCIATION ● 2101 L STREET, N.W., WASHINGTON, D.C. 20037

Copyright National Electrical Manufacturers Association
Provided by IHS under license with NEMA
No reproduction or networking permitted without license from IHS
Not for Resale

TABLE OF CONTENTS

		Page
	FOREWORD	i
	SCOPE	ii
Section 1	REFERENCED STANDARDS AND DEFINITIONS	
	Referenced Standards	1
	Definitions	2
Section 2	MANUFACTURING STANDARDS	
	Materials	3
	Finishes	3
	Dimensions	4
	Protection of Cable Insulation	4
	Fittings	4
	Marking of Trays When Used as Equipment Grounding Conductor	4
Section 3	PERFORMANCE STANDARDS AND CLASS DESIGNATIONS	
	Working (Allowable) Load Capacity	5
	Load/Span Class Designations	5
Section 4	TEST STANDARDS	
	Destruction Load Test	6
	Deflection Test	7
	Electrical Continuity of Connections	7
Section 5	SPECIFICATIONS AND DRAWINGS	
	Data to Appear in Specifications	8
	Data to Appear on Drawings	8
Section 6	APPLICATION INFORMATION	
	Deflection	9
	Concentrated Static Load	9
	Warning! Walkways	9
	Fittings	9
	Suport Locations	9
	Protection of Cable Insulation	10
	Thermal Contraction and Expansion	10
	Cable Installation	11
Figures 6-1 through 6-8	Support Locations for Fittings	12
6-9	Gap Setting of Expansion Splice Plate	14

© 1985 by National Electrical Manufacturers Association

Copyright National Electrical Manufacturers Association
Provided by IHS under license with NEMA
No reproduction or networking permitted without license from IHS
Not for Resale

Foreword

This Standards Publication provides technical requirements concerning the construction, test, and performance of metal cable tray systems. The development of this publication is the result of many years of research, investigation, and experience by the members of the Metal Cable Tray Section of NEMA. Throughout the development of this publication, test methods and performance values have been related as closely as possible to end-use applications. It has been developed through consultation among manufacturers, with users and engineering societies, to result in improved serviceability and safety of metal cable tray systems.

This publication reflects the study of applicable building codes and the *National Electrical Code*, and adheres to applicable national material and manufacturing standards, such as those of the American Society for Testing and Materials, the American Iron and Steel Institute, the Aluminum Association, and Underwriters Laboratories, Inc. This publication is periodically reviewed by the Metal Cable Tray Section of NEMA for any revisions necessary to keep it up to date with advancing technology.

Comments or recommended revisions are welcomed and should be submitted to:

Manager, Engineering Department
National Electrical Manufacturers Association
2101 L Street, N.W.
Washington, D.C. 20037

The primary purpose of this Standards Publication is to encourage the manufacture and utilization of standardized metallic cable tray systems and to elimate misunderstandings between manufacturers and users.

The cable tray system manufacturer has limited or no control over the following factors which are vital to a safe installation:

1. Enviromental conditions
2. System design
3. Product selection and application
4. Installation practices
5. Maintenance of the system.

This Standards Publication has been promulgated with a view towards promoting safety to persons and property by the proper selection and use of metal cable tray systems.

Copyright National Electrical Manufacturers Association
Provided by IHS under license with NEMA
No reproduction or networking permitted without license from IHS
Not for Resale

Scope

This standard covers continuous, complete, metallic systems of ladder, trough, solid-bottom or channel cable tray intended for, but not limited to, the support of power, control, and signal cables.

Copyright National Electrical Manufacturers Association
Provided by IHS under license with NEMA
No reproduction or networking permitted without license from IHS
Not for Resale

Section 1

REFERENCED STANDARDS AND DEFINITIONS

1.1 REFERENCED STANDARDS

In this publication, reference is made to the standards listed below. Copies are available from the indicated source.

I

American National Standards Institute
1430 Broadway
New York, NY 10018

ANSI/NFPA 70-84 *National Electrical Code*

II

American Society for Testing and Materials
1916 Race Street
Philadelphia, PA 19103

A165-80 *Electrodeposited Coatings of Cadmium on Steel, Specifications for*

A386-78 *Zinc Coating (Hot-Dip) on Assembled Steel Products, Specifications for*

A525-83 *General Requirements, Steel Sheet, Zinc-Coated (Galvanized) by the Hot-Dip Process, Specifications for*

B633-78 *Electrodeposited Coatings of Zinc on Iron and Steel, Specifications for*

III

National Fire Protection Association
Batterymarch Park
Quincy, MA 02269

ANSI/NFPA 70-84 *National Electrical Code*

Copyright National Electrical Manufacturers Association
Provided by IHS under license with NEMA
No reproduction or networking permitted without license from IHS
Not for Resale

1.2 DEFINITIONS

Accessories. Devices which are used to supplement the function of straight sections and fittings, and include such items as dropouts, covers, conduit adapters, hold-down devices and dividers.

NEMA Standard 11-15-1984.

Cable tray connector. A device which joins cable tray straight sections or fittings, or both.

The basic types of connectors are:

1. Rigid
2. Expansion
3. Adjustable
4. Reducer

NEMA Standard 11-15-1984.

Cable tray fitting. A device which is used to change the direction or size of a cable tray system.

NEMA Standard 11-15-1984.

Cable tray support. A device which provides adequate means for supporting cable tray sections or fittings, or both.

The basic types of cable tray supports are:

1. Cantilever bracket
2. Trapeze
3. Individual rod suspension

NEMA Standard 11-15-1984.

Cable tray types

Channel cable tray. A prefabricated metal structure consisting of a one-piece ventilated bottom or solid-bottom channel section, or both, not exceeding 6 inches in width.

Ladder cable tray. A prefabricated metal structure consisting of two longitudinal side rails connected by individual transverse members.

Solid bottom cable tray. A prefabricated metal structure consisting of a bottom with no openings within integral or separate longitudinal side rails.

Trough cable tray. A prefabricated metal structure greater than 4 inches in width consisting of a ventilated bottom within integral or separate longitudinal side rails.

NEMA Standard 11-15-1984.

Horizontal cross. A cable tray fitting which is suitable for joining cable trays in four directions at 90-degree intervals in the same plane.

NEMA Standard 11-15-1984.

Horizontal elbow. A cable tray fitting which changes the direction in the same plane.

NEMA Standard 11-15-1984.

Horizontal tee. A cable tray fitting which is suitable for joining cable trays in three directions at 90-degree intervals in the same plane.

NEMA Standard 11-15-1984.

Metallic cable tray system. An assembly of cable tray straight sections, fittings, and accessories that forms a rigid structural system to support cables.

NEMA Standard 11-15-1984.

Reducer (Straight, Right Hand, Left Hand)

Reducer. A cable tray fitting which is suitable for joining cable trays of different widths in the same plane.

A straight reducer has two symmetrical offset sides.

A right-hand reducer, when viewed from the large end, has a straight side on the right.

A left-hand reducer, when viewed from the large end, has a straight side on the left.

NEMA Standard 11-15-1984.

Straight section. A length of cable tray which has no change in direction or size.

NEMA Standard 11-15-1984.

Ventilated bottom. A cable tray bottom having openings sufficient for the passage of air and utilizing 60 percent or less of the plan area of the surface to support cables.

NEMA Standard 11-15-1984.

Vertical elbow (Inside or Outside)

Vertical elbow. A cable tray fitting which changes direction to a different plane.

An inside vertical elbow changes direction upward from the horizontal plane.

An outside vertical elbow changes direction downward from the horizontal plane.

NEMA Standard 11-15-1984.

Copyright National Electrical Manufacturers Association
Provided by IHS under license with NEMA
No reproduction or networking permitted without license from IHS

Not for Resale

Section 2

MANUFACTURING STANDARDS

2.1 MATERIALS

Cable tray systems shall be made of either corrosion-resistant metal or metal with a corrosion-resistant finish.

NEMA Standard 11-15-1984.

Aluminum and stainless steel alloys are inherently corrosion-resistant and no finish coating is required in most environments.

Authorized Engineering Information 11-15-1984.

2.2 FINISHES

2.2.1 Carbon steel used for cable trays shall be protected against corrosion by one of the following processes:

A. Hot-dip mill galvanized in accordance with ASTM Publication No. A525. G90 Coating.

NEMA Standard 11-15-1984.

Coating designation G90 of ASTM 525 has an average zinc coating weight of 1.25 oz. per square foot of steel, total coating on both surfaces (1.06 mils average thickness per side).

Hot-dip mill galvanized coatings are produced by continuous rolling steel sheets or strips in coils through a bath of molten zinc. The process involves pretreating the steel to make the surface react readily with molten zinc as the strip moves through the bath at high speeds. During fabrication where slitting, forming, cutting, or welding is performed, the cut edges and heat-affected zone of welding are subject to superficial oxidation. These areas are then protected through electrolytic action of the adjacent zinc surfaces. The coating is smooth, ductile, and adherent.

Authorized Engineering Information 11-15-1984.

B. Hot-dip galvanized after fabrication in accordance with ASTM Publication No. A386. Class B2.

NEMA Standard 11-15-1984.

Class B2 of ASTM A386 has an average zinc coating weight of 1.50 oz. per square foot (2.55 mils average thickness per side).

Fabricated products which are hot-dip galvanized are thoroughly cleaned, fluxed, and immersed into a bath of molten zinc where they react to form a metallurgically bonded zinc coating. Normal oxidation of the galvanized surfaces will, in a short period of time, appear as a dull gray or white coating. Some degree of roughness and variations of thickness can be expected due to the hot dipping process. Because the galvanizing process takes place at the low end of the stress-relieving temperature range, some stress relief occurs and some distortion or warping may result.

Authorized Engineering Information 11-15-1984.

2.2.2 Steel nuts and bolts shall be protected against corrosion by one of the following processes:

A. ASTM Publication No. B633
B. ASTM Publication No. A165
C. Other equivalent commercially available coatings.

NEMA Standard 11-15-1984.

2.2.3 Where metallic cable tray is intended for installation in highly corrosive environments, including most alkaline and acidic conditions, further protection against corrosion shall be provided by one of the following processes:

A. PVC (Polyvinylchloride)

A PVC coating shall be applied in a fluidized bed or by electrostatic spray.

The coating thickness shall be 15 mils $\pm$5 mils.

Items to be protected shall be thoroughly cleaned, primed, and then coated with a fine grain UV (ultraviolet) stabilized vinyl plastic powder.

All field cuts and damaged areas of coated tray shall be repaired with a compatible PVC compound to ensure a coating integrity.

NEMA Standard 11-15-1984.

A PVC coating is generally applied to bare steel cable tray but can also be applied in aluminum cable tray.

PVC is not recommended as a coating on galvanized steel cable trays because of rough surfaces and gas emissions which cause voids and adhesion problems.

Authorized Engineering Information 11-15-1984.

B. Other equivalent commercially available coatings.

NEMA Standard 11-15-1984.

Copyright National Electrical Manufacturers Association
Provided by IHS under license with NEMA
No reproduction or networking permitted without license from IHS
Not for Resale

2.3 DIMENSIONS

2.3.1 General

Plus or minus values stated reflect the range of nominal dimensions in cable tray designs and are not intended to represent manufacturing tolerances.

Authorized Engineering Information 11-15-1984.

2.3.2 Ladder Trays

1. *Lengths of Straight Sections*—12 feet plus or minus 3/16 inch and 24 feet plus or minus 5/16 inch, not including connectors if attached.
2. *Widths*—6, 12, 18, 24, 30, and 36 inches, plus or minus 1/4 inch inside dimension.
   Overall widths shall not exceed inside widths by more than 4 inches.
3. *Depths*—Inside depths shall be 3, 4, 5, and 6 inches, plus or minus 3/8 inch.
   Outside depths shall not exceed inside depths by more than 1 1/4 inches.
4. *Rung Spacing on Straight Sections*—6, 9, 12, or 18 inches on centers.
5. *Radii*—12, 24, and 36 inches.
6. *Degree of Arc for Elbows*—30, 45, 60, and 90 degrees.

2.3.3 Trough Trays

1. *Lengths of Straight Sections*—12 feet plus or minus 3/16 inch and 24 feet plus or minus 5/16 inch, not including connectors if attached.
2. *Widths*—6, 12, 18, 24, 30, and 36 inches, plus or minus 1/4 inch, inside dimension.
   Overall widths shall not exceed inside widths by more than 4 inches.
3. *Depths*—Inside depths shall be 3, 4, 5, and 6 inches, plus or minus 3/8 inch.
   Outside depths shall not exceed inside depths by more than 1 1/4 inches.
4. *Radii*—12, 24, and 36 inches.
5. *Degrees of Arc for Elbows*—30, 45, 60, and 90 degrees.
6. *Transverse Elements*—The maximum open spacing between transverse elements shall be 4 inches measured in a direction parallel to the tray side rails.

2.3.4 Solid-Bottom Trays

1. *Lengths of Straight Sections*—12 feet plus or minus 3/16 inch and 24 feet plus or minus 5/16 inch, not including connectors if attached.
2. *Widths*—6, 12, 18, 24, 30, and 36 inches, plus or minus 1/4 inch, inside dimension.
   Overall widths shall not exceed inside widths by more than 4 inches.
3. *Depths*—Inside depths shall be 3, 4, 5, and 6 inches, plus or minus 3/8 inch.
   Outside depths shall not exceed inside depths by more than 1 1/4 inches.
4. *Radii*—12, 24, and 36 inches.
5. *Degree of Arc for Elbows*—30, 45, 60, and 90 degrees.
6. *Bottom*—Bottom is solid.

2.3.5 Channel Trays

1. *Lengths of Straight Sections*—12 feet plus or minus 3/16 inch and 24 feet plus or minus 5/16 inch, not including connectors if attached.
2. *Widths*—3, 4, and 6 inches, plus or minus 1/4 inch, inside dimension.
3. *Depths*—1 1/4 to 1 3/4 inches nominal outside dimensions.
4. *Radii*—12, 24, and 36 inches.
5. *Degree of Arc for Elbows*—30, 45, 60, and 90 degrees.

NEMA Standard 11-15-1984.

2.4 PROTECTION OF CABLE INSULATION

The inside of cable tray systems shall present no sharp edges, burrs, or projections which can damage cable insulation.

NEMA Standard 7-14-1976.

2.5 FITTINGS

The design and construction of fittings shall be based on the assumption that they will be supported in accordance with the recommendations given in 6.6 for support locations.

NEMA Standard 11-15-1984.

2.6 MARKING OF TRAYS WHEN USED AS EQUIPMENT GROUNDING CONDUCTORS

When steel or aluminum cable tray systems are used as equipment grounding conductors, cable tray sections and fittings shall be marked to show the minimum cross-sectional area in accordance with the Article 318 of the *National Electrical Code.*

NEMA Standard 7-14-1976.

Copyright National Electrical Manufacturers Association
Provided by IHS under license with NEMA
No reproduction or networking permitted without license from IHS

Not for Resale

Section 3

PERFORMANCE STANDARDS AND CLASS DESIGNATIONS

3.1 WORKING (ALLOWABLE) LOAD CAPACITY

The working (allowable) load capacity represents the ability of a cable tray to support the static weight of cables. It is equivalent to the destruction load capacity, as determined by testing in accordance with 4.1 divided by a safety factor of 1.5.

NEMA Standard 3-14-1979.

3.2 LOAD/SPAN CLASS DESIGNATIONS

There shall be three working load categories of cable tray:*

1. 50 lbs/linear ft. (Symbol A)
2. 75 lbs/linear ft. (Symbol B)
3. 100 lbs/linear ft. (Symbol C)

and, four support span categories of:

1. 8 feet
2. 12 feet
3. 16 feet
4. 20 feet

Utilizing these, the load/span designations of Table 3-1 shall apply.

*For deflection see 6.1.

NEMA Standard 3-14-1979.

Table 3-1
LOAD/SPAN DESIGNATIONS

Class Designation	Support Span Feet	Working Load Lbs/Linear Foot (Per. 3.1)
8A	8	50
8B	8	75
8C	8	100
12A	12	50
12B	12	75
12C	12	100
16A	16	50
16B	16	75
16C	16	100
20A	20	50
20B	20	75
20C	20	100

NOTE 1—The above working loads are for cable only; when considering applications requiring concentrated static load, see 6.2.

NOTE 2—These designations do not apply to channel tray, and the manufacturer should be consulted.

Authorized Engineering Information 11-15-1984.

Copyright National Electrical Manufacturers Association
Provided by IHS under license with NEMA
No reproduction or networking permitted without license from IHS

Not for Resale

Section 4

TEST STANDARDS

4.1 DESTRUCTION LOAD TEST

4.1.1 Test Specimen

For each design of cable tray, two unspliced straight specimens of the widest width shall be tested.

Differences in gage, height of side rails, rung or bottom to side rail connection, or the configuration of any part constitute a different design.

NEMA Standard 11-15-1984.

4.1.2 Type and Length of Span

Test spans shall be simple beam spans with free unrestrained ends. Trays shall not have side restraints. Span lengths shall be as specified plus or minus 1½ inches.

NEMA Standard 11-15-1984.

4.1.3 Orientation of Specimens

Specimens shall be tested in a horizontal position. The total length of the test specimen shall be not more than the specified span length plus 20 percent. Any overhang shall be equal.

NEMA Standard 11-15-1984.

4.1.4 Supports

Each end of the specimen shall be supported by an 1⅛ inch wide by ¾ inch high steel bar(s) with a 120-degree "Vee" notch cut in its bottom to a depth of 3/16 inch. The "Vee" notch shall rest on a 1 inch solid round steel bar which is welded at a maximum of 12 inches on center to a firm steel base, or the specimen shall be supported directly on a 2½ inch maximum diameter round steel bar or heavy wall steel tube welded to a firm steel base.

NEMA Standard 11-15-1984.

4.1.5 Loading Material

Loading material shall be steel strips, lead ingots, or other loading material.

Steel strips shall have rounded or deburred edges, a maximum thickness of ⅛ inch, a width of 1⅛ to 2 inches, a maximum length of 4 feet.

Five lead ingots, each weighing approximately 5 pounds, shall be interconnected across corners into a string of 5 ignots approximately 22 inches long. Individual ingots are normally hexagonal, approximately 3 inches in diameter, and 1½ inches deep.

Other loading material shall have a maximum weight of 10 pounds, a maximum width of 5 inches, and a maximum length of 12 inches.

NEMA Standard 11-15-1984.

4.1.6 Loading

All specimens shall be loaded to destruction. The load shall be applied in at least 10 increments which are approximately equal.

Loading shall be uniformly distributed for the length and breadth of the specimen except that the loading material shall be not closer than ½ inch nor further than 1 inch from the innermost elements of the side rails. It shall be arranged across the tray with a minimum of ⅜ inch between stacks to that the loading material does not bridge transversely. All loading material shall be placed between the supports without overhanging.

For loading weights in a ladder-type tray, it shall be permissible to cover the bottom of the tray between supports with a flat sheet of No. 9 gage flattened expanded metal not more than 3 feet long and with a wire hole size of ¾ inch, or a flat sheet of No. 16 gage sheet steel not more than 3 feet long. The expanded metal or sheet steel shall not be fastened to the tray and shall be no closer than ½ inch to the side rails. The 3-foot lengths shall not overlap. The weight of the expanded metal or sheet steel shall be added to the total weight of the loading material.

NEMA Standard 11-15-1984.

4.1.7 Destruction Load Capacity

The total weight of the loading material on the cable tray at the time it is destroyed shall be considered to be the destruction load capacity of the cable tray.

NEMA Standard 11-15-1984.

4.1.8 Interpolation and Extrapolation of Test Data

When allowable load and deflection data are determined by load tests, values for span lengths not tested shall be determined by interpolation from a curve based on

Copyright National Electrical Manufacturers Association
Provided by IHS under license with NEMA
No reproduction or networking permitted without license from IHS
Not for Resale

values for a minimum of three tested span lengths. Extrapolation toward shorter span lengths is permissible but shall not be used for span lengths longer than the longest span length tested.

NEMA Standard 11-15-1984.

4.2 DEFLECTION TEST

The vertical deflection of the tray shall be measured at two points along the line midway between the supports and at right angles to the longitudinal axis of the tray. The two points of measurement shall be at the midpoint of the span of each side rail.

The average of these two readings shall be considered to be the vertical deflection of the tray.

For application information on deflection see 6.1.

NEMA Standard 3-14-1979.

4.3 ELECTRICAL CONTINUITY OF CONNECTIONS

4.3.1 Test Specimen

Each specimen shall consist of two 24-inch lengths of side rail plus mechanical connecting means.

NEMA Standard 7-17-1976.

4.3.2 Resistance Test Procedure

Each specimen should be joined together, using the mechanical connector and following the instructions provided by the manufacturer.

Authorized Engineering Information 7-14-1976.

A current of 30 amperes shall be passed through the specimen and the resistance measured between two points 6 inches on each side of the joint. The net resistance of the joint shall be not more than 0.00033 ohm as computed from the measured voltage drop and the current passing through the specimen.

NEMA Standard 7-14-1976.

Copyright National Electrical Manufacturers Association
Provided by IHS under license with NEMA
No reproduction or networking permitted without license from IHS

Not for Resale

Section 5

SPECIFICATIONS AND DRAWINGS

5.1 DATA TO APPEAR IN SPECIFICATIONS

The following minimum data, when applicable, should appear in all cable tray specifications:

1. Class designation
2. Type (ladder, trough, and so forth)
3. Material
4. Finish
5. Rung spacing
6. Inside depth
7. Radius (if same throughout)
8. Accessories.

Authorized Engineering Information 3-14-1979.

5.2 DATA TO APPEAR ON DRAWINGS

The following minimum data should appear on all cable tray drawings:

1. Type (ladder, trough, and so forth)
2. Width
3. Straight section, fitting, or accessory
4. Radii (mixed)
5. Elevation (note point of measurement)
6. Vertical and horizontal changes in position
7. Clearances—vertical and horizontal
8. Number of trays
9. Supports.

Authorized Engineering Information 3-14-1979.

Copyright National Electrical Manufacturers Association
Provided by IHS under license with NEMA
No reproduction or networking permitted without license from IHS

Not for Resale

Section 6

APPLICATION INFORMATION

6.1 DEFLECTION

Under normal applications deflection limitations should not be included in design criteria for cable tray systems. However, if unusual or special conditions exist, the manufacturer should be consulted. Limitations of deflection for aesthetic purpose only can result in an overdesigned tray system.

Authorized Engineering Information 3-14-1979.

6.2 CONCENTRATED STATIC LOAD (If Required by User)

A concentrated static load is not included in Table 3-1, Load/Span Designations. Some user applications may require that a given concentrated static load be imposed over and above the working load.

Such a concentrated static load represents a static weight applied between the side rails at midspan. When so specified, the concentrated static load may be converted to an equivalent, uniform load (W_e) in pounds per linear foot using the formula:

$$W_e = \frac{2 \times (\text{Concentrated Static Load})}{\text{span length (ft.)}}$$

and added to the static weight of cables in the tray. This combined load may be used to select a suitable load/span designation (see Table 3-1). If the combined load exceeds the working load shown in Table 3-1, the manufacturer should be consulted.

Authorized Engineering Information 11-15-1984.

6.3 WARNING! WALKWAYS

Inasmuch as cable tray is designed as a support for power or control cables, or both, and is not intended or designed to be a walkway for personnel, the user is urged to display appropriate warnings cautioning against the use of this support as a walkway. The following language is suggested:

Warning! Not to be used as a walkway, ladder or support for personnel. To be used only as a mechanical support for cables and tubing.

Authorized Engineering Information 3-14-1979.

6.4 FITTINGS

Changes in direction should be mechanically continuous and accomplished by use of fittings having dimensions in accordance with 2.3.

Authorized Engineering Information 3-14-1979.

6.5 SUPPORTS

Supports for cable trays should provide a strength and working load capacity sufficient to meet the load requirement of the cable tray systems.

1. Horizontal and vertical tray supports should provide an adequate bearing surface for the tray and should have provisions for holddown clamps or fasteners.
2. In additions, vertical tray supports should provide secure means for fastening cable trays to supports.

Authorized Engineering Information 5-15-1979.

6.6 SUPPORT LOCATIONS

6.6.1 General

Supports should be located whenever practical so that connectors between the horizontal straight sections of cable tray runs fall between the support point and the quarter point of the span. Unspliced straight sections should be used on all simple spans and on end spans of continuous span arrangements. A support should be located within 2 feet of each side of an expansion connector.

Authorized Engineering Information 11-15-1984.

6.6.2 Horizontal Cable Tray Fittings

1. *Horizontal Elbow Supports (See Figure 6-1)*—Supports for horizontal tray fittings should be placed within 2 feet of each fitting extremity, and as follows:
   (a) 90-degree supports at the 45-degree point of arc.
   (b) 60-degree supports at the 30-degree point of arc.
   (c) 45-degree supports at the 22½-degree point of arc (except for the 12-inch radii).
   (d) 30-degree supports at the 15-degree point of arc (except for the 12-inch radii).
2. *Horizontal Tee Supports (See Figure 6-2)*—Within 2 feet of each of the three openings connected to other cable tray items for the 12-inch radius. On

Copyright National Electrical Manufacturers Association
Provided by IHS under license with NEMA
No reproduction or networking permitted without license from IHS
Not for Resale

all other radii, at least one support should be placed under each side rail of the horizontal tee, preferably as shown in Figure 6-2.

3. *Horizontal Cross Supports (See Figure 6-3)*—Within 2 feet of each of the four openings connected to other cable tray items for the 12-inch radius. On all other radii, at least one support should be placed under each side rail of the horizontal cross, preferably as shown in Figure 6-3.
4. *Horizontal Wye Supports (See Figure 6-4)*—Within 2 feet of each of the three openings connected to other cable tray items, and at 22½ degree point of the arc adjacent to the side branch.
5. *Reducer Supports (See Figures 6-5 and 6-6)*—Within 2 feet of each fitting extremity.

Authorized Engineering Information 11-15-1984.

6.6.3 Vertical Cable Tray Elbows (See Figure 6-7)

Vertical cable tray elbows at the top of runs should be supported at each end. Vertical cable tray elbows at the bottom of runs should be supported at the top of the elbow, and within 2 feet of the lower extremity of the elbow.

Authorized Engineering Information 11-15-1984.

6.6.4 Vertical Cable Tray Tees (See Figure 6-8)

Vertical cable tray tees should be supported within 2 feet of each fitting extremity.

Authorized Engineering Information 11-15-1984.

6.6.5 Vertical Straight Sections

Vertical straight sections should be supported indoors at appropriate intervals permitted by the building structure; outdoor support intervals should be determined by wind loading. The maximum distance between vertical supports should not exceed 24 feet on centers.

Authorized Engineering Information 11-15-1984.

6.6.6 Sloping Trays

Sloping trays should be supported at intervals not exceeding those for horizontal trays of the same design for the same installation.

Authorized Engineering Information 11-15-1984.

6.6.7 Fittings as End of Run

A fitting which is used as an end of the run dropout should have a support attached to it, firmly reinforcing the fitting.

Authorized Engineering Information 11-15-1984.

6.7 PROTECTION OF CABLE INSULATION

The inside of cable tray systems should present no sharp edges, burrs, or projections which could damage cable insulation.

Authorized Engineering Information 3-14-1979.

6.8 THERMAL CONTRACTION AND EXPANSION

It is important that thermal contraction and expansion be considered when installing cable tray systems. If it is determined that expansion connectors are required, reference should be made to Table 6-1 for maximum spacing.

The cable tray should be securely fixed at the support nearest to its midpoint between the expansion connectors and secured by expansion guides at all other support locations. The cable tray should be permitted longitudinal movement in both directions from that fixed point towards the expansion connectors.

Accurate gap setting at the time of installation is necessary for the proper operation of the expansion connectors. The following procedure should assist the installer in determining the correct gap:

Step 1—Plot the highest expected metal temperature on the maximum temperature line (Figure 6-9). Plot the lowest temperature on the minimum temperature line (Figure 6-9).

Step 2—Draw a line between the maximum and minimum points.

Step 3—To determine the gap setting, plot the metal temperature at the time of installation.

Authorized Engineering Information 11-15-1984.

Copyright National Electrical Manufacturers Association
Provided by IHS under license with NEMA
No reproduction or networking permitted without license from IHS
Not for Resale

Table 6-1
MAXIMUM SPACING BETWEEN EXPANSION JOINTS THAT PROVIDE FOR ONE INCH MOVEMENT

Temperature Differential, Degrees F	Steel Feet	Aluminum Feet
25	512	260
50	256	130
75	171	87
100	128	65
125	102	52
150	85	43
175	73	37

6.9 CABLE INSTALLATION

When installing cable in cable tray, it is important that care and planning be exercised so that the cable or the cable tray is not damaged or destroyed. The cable manufacturer should be contacted for maximum pulling tensions and minimum bending radii, and advice on prevention of "egging" or deformation of cable jacketing or shielding.

Authorized Engineering Information 11-15-1984.

Copyright National Electrical Manufacturers Association
Provided by IHS under license with NEMA
No reproduction or networking permitted without license from IHS

Not for Resale

SUPPORT LOCATIONS FOR FITTINGS

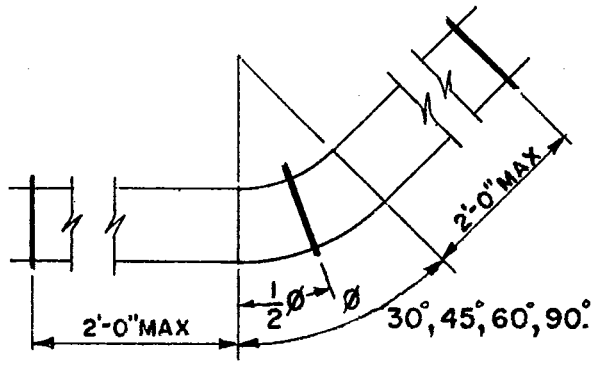

Figure 6-1
HORIZONTAL ELBOWS

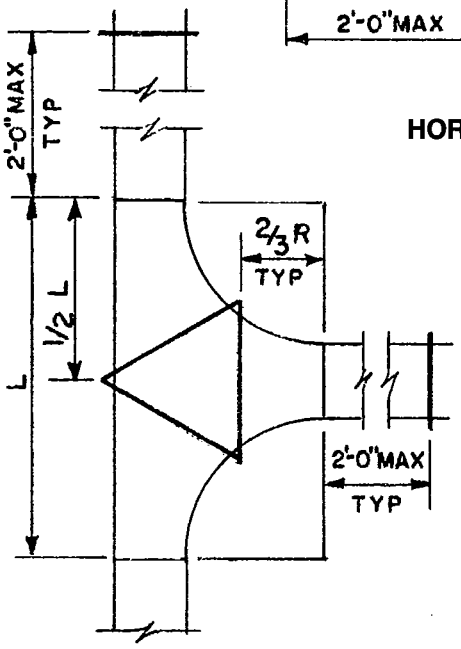

Figure 6-2
HORIZONTAL TEE

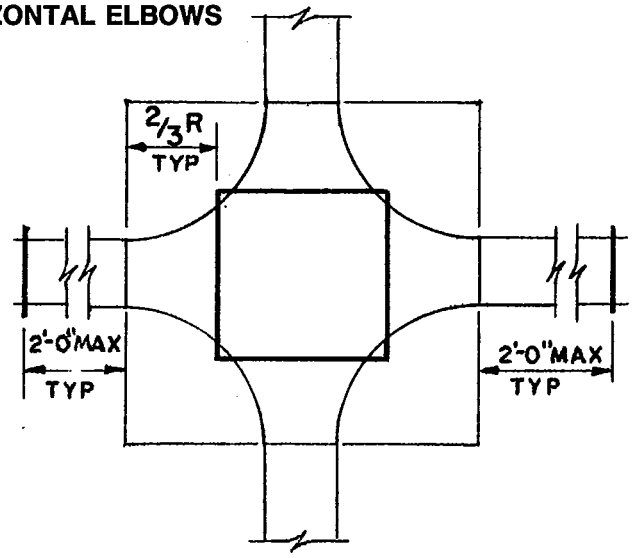

Figure 6-3
HORIZONTAL CROSS

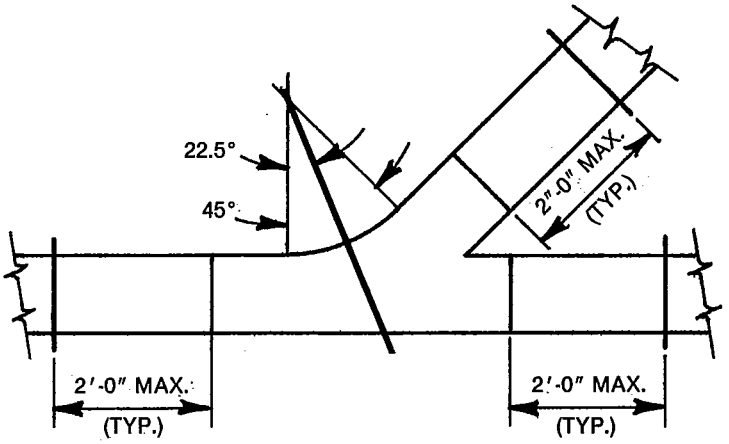

Figure 6-4
HORIZONTAL WYE

Copyright National Electrical Manufacturers Association
Provided by IHS under license with NEMA
No reproduction or networking permitted without license from IHS
Not for Resale

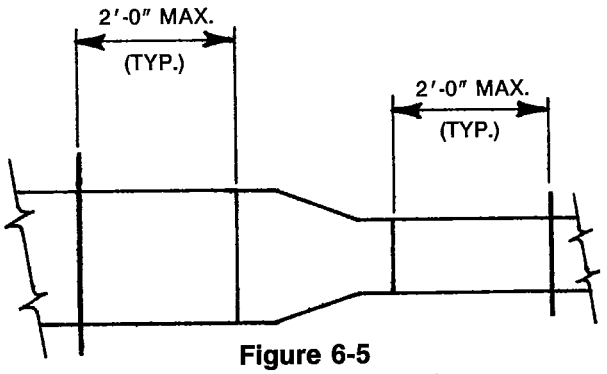

Figure 6-5
STRAIGHT REDUCER

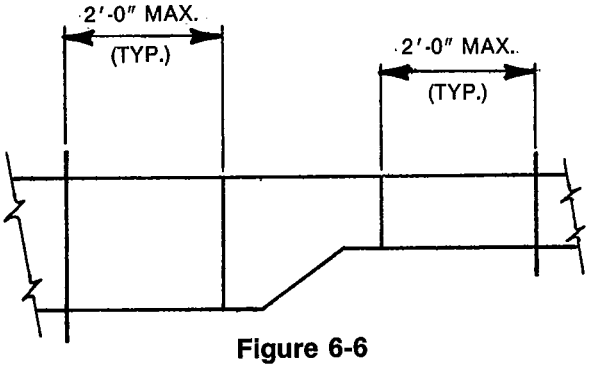

Figure 6-6
OFFSET REDUCER

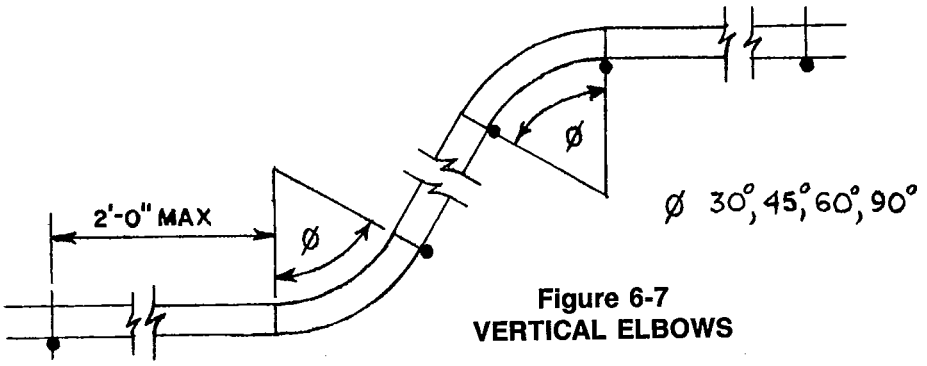

Figure 6-7
VERTICAL ELBOWS

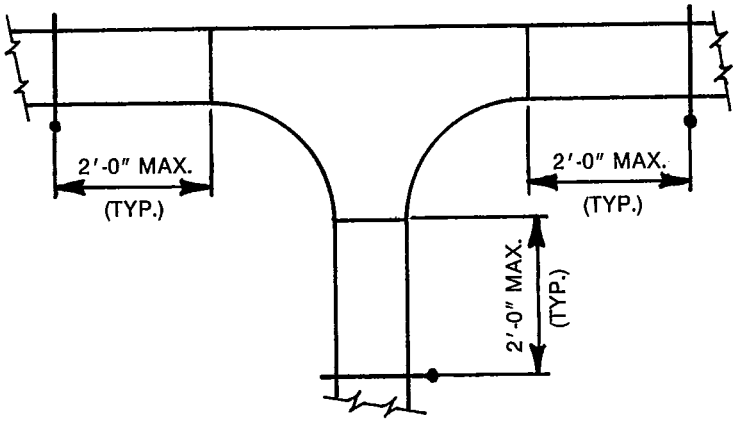

Figure 6-8
VERTICAL TEE

Copyright National Electrical Manufacturers Association
Provided by IHS under license with NEMA
No reproduction or networking permitted without license from IHS
Not for Resale

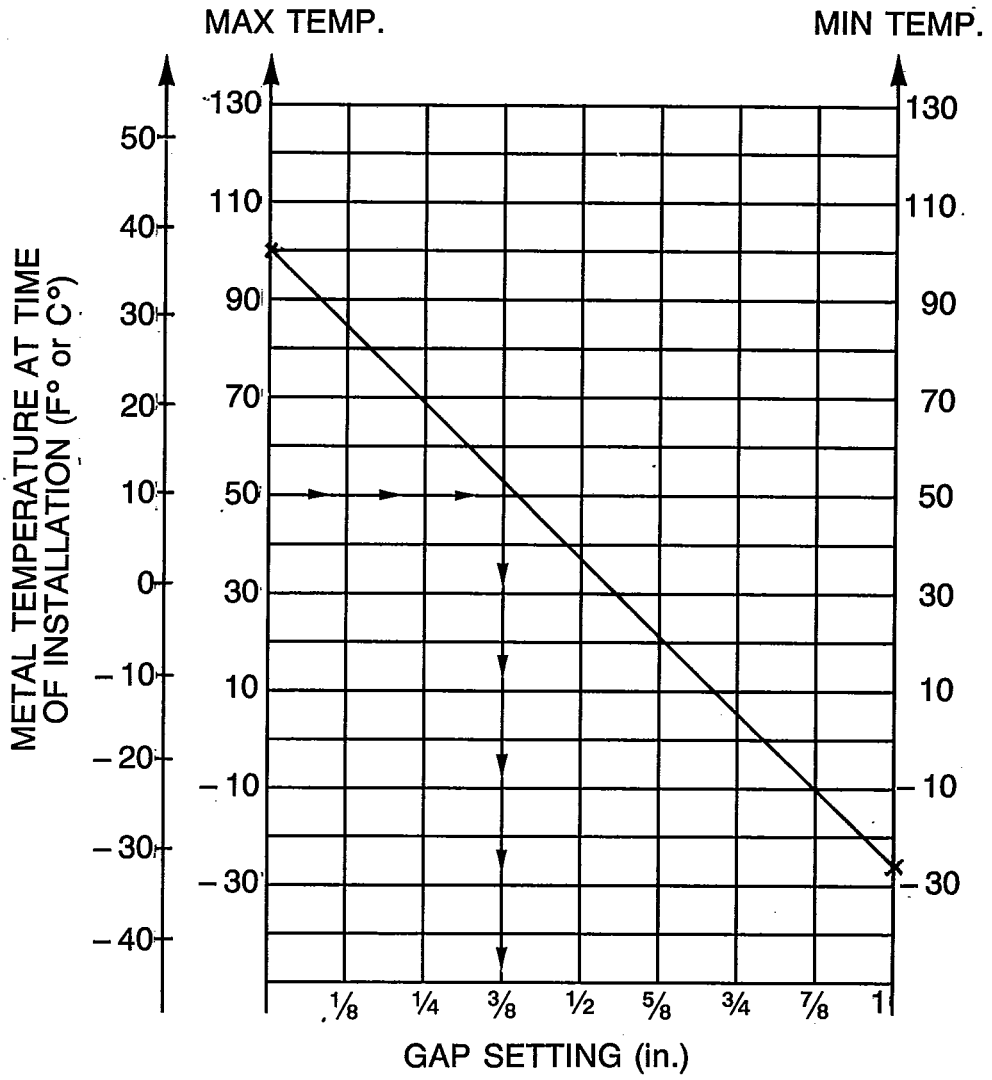

Figure 6-9
GAP SETTING OF EXPANSION SPLICE PLATE
1″ GAP MAXIMUM

Copyright National Electrical Manufacturers Association
Provided by IHS under license with NEMA
No reproduction or networking permitted without license from IHS
Not for Resale

NEMA STANDARDIZATION

The purpose of NEMA Standards, their classification and status are set forth in certain clauses of the NEMA Bylaws, which are quoted below:

Purpose of Standards

National Electrical Manufacturers Association Standards are adopted in the public interest and are designed to eliminate misunderstandings between the manufacturer and the purchaser and to assist the purchaser in selecting and obtaining the proper product for its particular need. Existence of a National Electrical Manufacturers Association Standard does not in any respect preclude any member or nonmember from manufacturing or selling products not conforming to the standard.

(Bylaw—Art. V, Sec. 1)

Definition of a Standard

A standard of the National Electrical Manufacturers Association defines a product, process or procedure with reference to one or more of the following: nomenclature, composition, construction, dimensions, tolerances, safety, operating characteristics, performance, rating, testing, and the service for which they are designed.

(Bylaw—Art. V, Sec. 2, Subsection A)

Dimensions

Where dimensions are given for interchangeability purposes, alternate dimensions satisfying the other provisions of the standards publication may be capable of otherwise equivalent performance.

(NEMA Policy Memorandum 84-2, dated June 7, 1984)

Classes of Standards

National Electrical Manufacturers Association Standards are of two classes:

1. NEMA Standard, which relates to a product commercially standardized and subject to repetitive manufacture, which standard has been approved by at least 90 percent of the members of the Subdivision eligible to vote thereon;
2. Suggested Standard for Future Design, which may not have been regularly applied to a commercial product, but which suggests a sound engineering approach to future development, which standard has been approved by at least two-thirds of the members of the Subdivision eligible to vote thereon.

(Bylaw—Art. V, Sec. 2, Subsection B)

Authorized Engineering Information

Authorized Engineering Information consists of explanatory data and other engineering information of an informative character not falling within the classification of NEMA Standard or Suggested Standard for Future Design.

(Bylaw—Art. V, Sec. 6, 1st Sentence)

Official Standards Proposal

An Official Standards Proposal is an official draft of a proposed standard which is formally recommended to an outside organization(s) for consideration, comment and/or approval.

(Bylaw—Art. V, Sec. 4, Subsection A)

Identification of Status

Standards in NEMA Standards Publications are identified in the foreword or following each standard as "NEMA Standard" or "Suggested Standard for Future Design." These indicate the status of the standard. These words are followed by a date which indicates when the standard was adopted in its present form by the Association.

The material identified as "Authorized Engineering Information" and "Official Standards Proposal" is designated similarly.

Copyright National Electrical Manufacturers Association
Provided by IHS under license with NEMA
No reproduction or networking permitted without license from IHS
Not for Resale

METAL CABLE TRAY SECTION OF THE NATIONAL ELECTRICAL MANUFACTURERS ASSOCIATION

MEMBER COMPANIES

B-Line Systems
Highland, IL 62249

Chalfant Manufacturing Co.
Cleveland, OH 44102

T.J. Cope, Inc.
Collegeville, PA 19426

MP Husky Corp.
Greenville, SC 29606

P-W Industries, Inc.
Langhorne, PA 19047

Square D Co.
Oxford, OH 45056

USG Industries Inc.
Chicago, IL 60606

Copyright National Electrical Manufacturers Association
Provided by IHS under license with NEMA
No reproduction or networking permitted without license from IHS
Not for Resale