9009279 0002096 213

NATIONAL ELECTRICAL MANUFACTURERS ASSOCIATION

2101 L STREET N.W. WASHINGTON, D.C. 20037



March 8, 1982

TO ALL REPRESENTATIVES OF MEMBER COMPANIES
IN THE TRANSFORMER SECTION

Subject: Revision No. 1 for the NEMA Standards Publication for *Transformers, Regulators and Reactors,* Publication No. TR 1-1980

Dear Representative:

At its meeting of September 17, 1981, the Codes and Standards Committee approved two revisions in the subject publication.

Please delete Part 0, Page 6, par. TR 1-0.07 from your copy of TR 1-1980.

Please also delete Part 0, Page 8, par. TR 1-0.09 from your copy of TR 1-1980.

Sincerely yours,

Carol Cross

Carol Cross
Standards Publications Editor

cc: All known holders of TR 1-1980

Copyright National Electrical Manufacturers Association
Provided by IHS under license with NEMA
No reproduction or networking permitted without license from IHS
Not for Resale

9009279 0002097 15T

AIUM/NEMA STANDARDS PUBLICATION NO. UL 1-1981

nema

# Safety Standard for Diagnostic Ultrasound Equipment

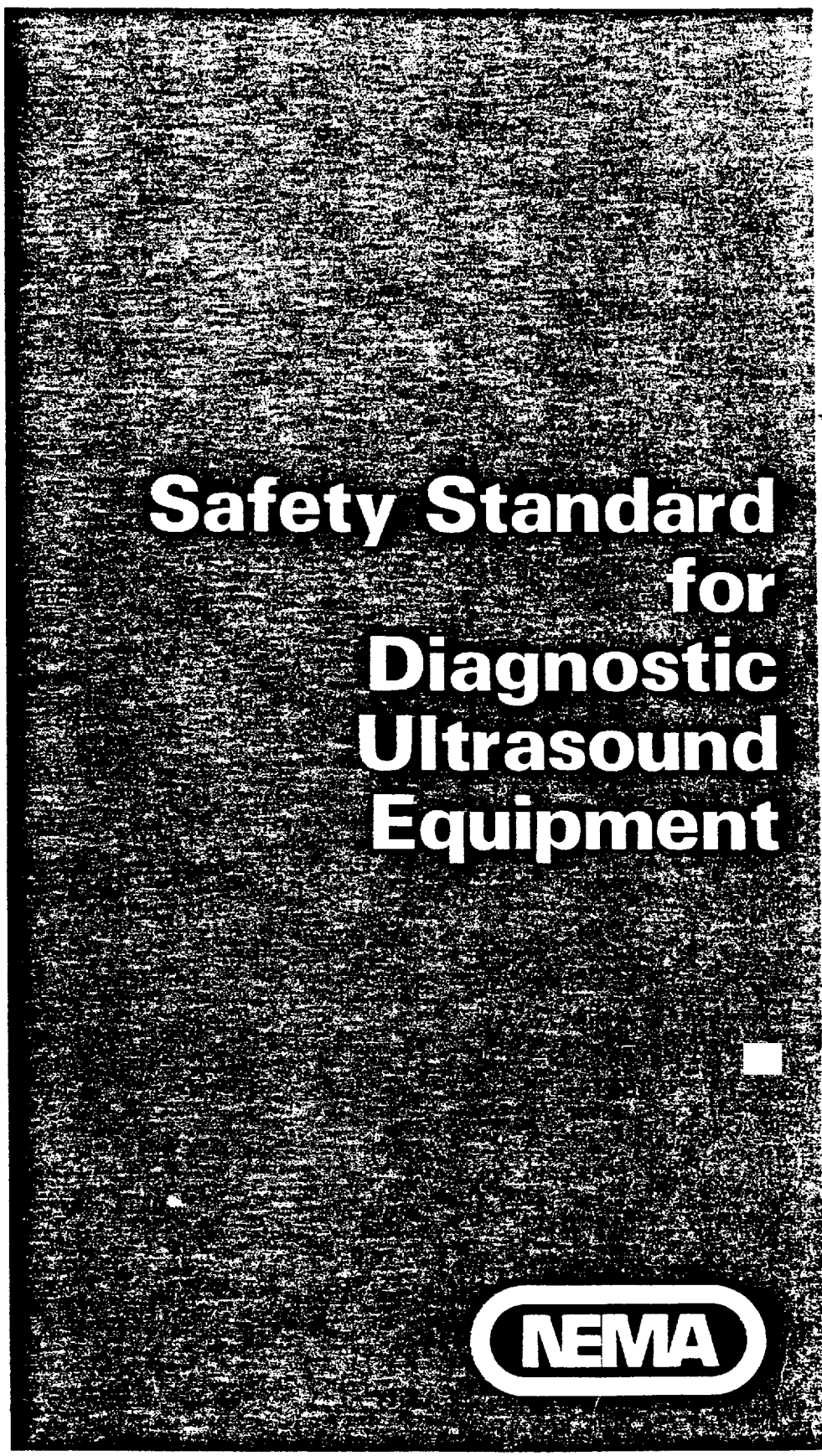


NATIONAL ELECTRICAL MANUFACTURERS ASSOCIATION ■ 2101 L STREET, N.W., WASHINGTON, D.C. 20037

Copyright National Electrical Manufacturers Association
Provided by IHS under license with NEMA
No reproduction or networking permitted without license from IHS

Not for Resale

9009279 0002098 096

## TABLE OF CONTENTS


| | | Page |
|---|---|---|
| | FOREWORD | i |
| | PURPOSE | ii |
| | SCOPE | ii |
| Section 1 | DEFINITIONS AND REFERENCED STANDARDS | 1 |
| Section 2 | ACOUSTIC LABELING REQUIREMENTS | 5 |
| Section 3 | ACOUSTIC MEASUREMENT METHODS | 7 |
| Section 4 | ELECTRICAL SAFETY REQUIREMENTS | 17 |
| Section 5 | ULTRASOUND SAFETY GUIDELINES | 18 |
| Appendix A | BIOEFFECTS AND BIOPHYSICS RELATED TO DIAGNOSTIC ULTRASOUND EQUIPMENT | 19 |
| Appendix B | SURVEY OF EXPOSURE LEVELS FROM CURRENT DIAGNOSTIC ULTRASOUND SYSTEMS | 31 |
| Appendix C | RATIONALE FOR ACOUSTIC LABELING REQUIREMENTS, DEFINITIONS, AND ULTRASOUND SAFETY GUIDELINES | 33 |
| Appendix D | RATIONALE FOR MEASUREMENT METHODS | 37 |
| Appendix E | HYDROPHONE CALIBRATION PROCEDURE | 41 |
| Appendix F | RATIONALE FOR ELECTRICAL SAFETY REQUIREMENTS | 49 |


© 1981 by National Electrical Manufacturers Association

and

American Institute of Ultrasound in Medicine

Copies available from:

NEMA Order Department
2101 L Street, N.W.
Washington, D.C. 20037

Copyright National Electrical Manufacturers Association
Provided by IHS under license with NEMA
No reproduction or networking permitted without license from IHS

Not for Resale

9009279 0002099 T22

## Foreword

User input has been considered in the development of this standards publication.

This standards publication was developed by a joint task group of the Ultrasound Imaging Section of the National Electrical Manufacturers Association and the Bioeffects and Standards Committees of the American Institute of Ultrasound in Medicine. These organizations will periodically review the publication for any revisions necessary to keep it up to date with advancing technology. Proposed revisions should be submitted to:

Manager, Engineering Department
National Electrical Manufacturers Association
2101 L Street, N.W.
Washington, D.C. 20037

Executive Director
American Institute of Ultrasound in Medicine
4405 East-West Highway
Suite 504
Washington, D.C. 20014



Copyright National Electrical Manufacturers Association
Provided by IHS under license with NEMA
No reproduction or networking permitted without license from IHS
Not for Resale

9009279 0002100 574

## Purpose

The objectives of this standards publication are to assure that sufficient information on the characteristics of diagnostic ultrasound equipment is supplied to allow medical personnel to make informed judgments regarding the application of this equipment to patients, particularly by:

a. Setting forth precise definitions of parameters, primarily those relating to acoustic output levels.

b. Specifying labeling requirements for specific acoustical output parameters on all equipment covered by the standards publication, with test methods where appropriate.

c. Setting forth electrical safety requirements, mechanical safety guidelines, and qualitative ultrasound safety guidelines relating to equipment characteristics and information provided to users.

d. Setting forth current information on the known or suspected biological effects resulting from exposure to ultrasound.

## Scope

This standard covers all active ultrasound apparatus designed for medical diagnostic use, including ultrasonic echo ranging devices (both manual and automatically scanned), through-transmission devices, Doppler echo equipment, and combinations thereof.

This document relates only to performance characteristics of ultrasound equipment as they pertain to patient exposure and safety. The details of use, medical efficacy, and performance parameters unrelated to exposure and safety are not considered.

This standard establishes labeling and measurement requirements for acoustical output parameters for ultrasonic diagnostic equipment. Acoustical output labeling requirements address those characteristics of the diagnostic devices that relate to ultrasound exposure to the patient.



Copyright National Electrical Manufacturers Association
Provided by IHS under license with NEMA
No reproduction or networking permitted without license from IHS
Not for Resale

9009279 0002101 400



# Safety Standard for Diagnostic Ultrasound Equipment

## Section 1
## DEFINITIONS AND REFERENCED STANDARDS

(Where used in this standard, the terms defined below are italicized.)

**1.1** ABSOLUTE MAXIMUM means the largest possible value of a specified quantity either for an individual instrument or for all instruments of a given generic type. This value shall include effects of inaccuracies and imprecision of the measurement process(es) used to determine it.

NEMA Standard 9-17-1981.

**1.2** ABSOLUTE MINIMUM means the smallest possible value of a specified quantity either for an individual instrument or for all instruments of a given generic type. This value shall include effects of inaccuracies and imprecision of the measurement process(es) used to determine it.

NEMA Standard 9-17-1981.

**1.3** ACOUSTICAL EXPOSURE means the distribution of *exposure time* and acoustical field quantities, such as *intensity*, incident on an individual or object.

NEMA Standard 9-17-1981.

**1.4** ACOUSTIC PRESSURE means the value of the total pressure minus the ambient pressure.

NEMA Standard 9-17-1981.

**1.5** AMPLITUDE MODULATED WAVEFORM means a *waveform* in which the *amplitude modulation factor* is greater than 5 percent.

NEMA Standard 9-17-1981.

**1.6** AMPLITUDE MODULATION FACTOR means the value of the expression $100 \times (|A| - |B|)/|A|$ where $|A|$ and $|B|$ are the *absolute maximum* and *absolute minimum* values of the *envelope* of a modulated acoustical or electrical carrier (first order quantity), respectively, expressed as a percentage.

NEMA Standard 9-17-1981.

**1.7** BANDWIDTH means the difference in the frequencies $f_1$ and $f_2$ at which the transmitted *acoustic pressure* spectrum is 71 percent ($-3$ dB) of its maximum value.

NEMA Standard 9-17-1981.

**1.8** BEAM AXIS means a straight line joining the points of maximum *pulse intensity integral* measured in the *far field*. This line, calculated according to regression rules, should be extended back to the *transducer assembly* surface.

NEMA Standard 9-17-1981.

**1.9** BEAM CROSS-SECTIONAL AREA means the area on the surface of a plane perpendicular to the *beam axis* consisting of all points where the *pulse intensity integral* is greater than 25 percent of the maximum *pulse intensity integral* in that plane. For situations in which the relative *waveform* does not change significantly across the *beam cross-sectional area*, the *beam cross-sectional area* may be approximated by measuring the area on the surface of a plane perpendicular to the *beam axis* consisting of all points where the *acoustic pressure* is greater than 50 percent of the maximum *acoustic pressure* in the plane.

NEMA Standard 9-17-1981.

**1.10** BROADBAND TRANSDUCER means a transducer with a *fractional bandwidth* greater than or equal to 15 percent.

NEMA Standard 9-17-1981.

**1.11** CENTER FREQUENCY ($f_c$) means $(f_1 + f_2)/2$ where $f_1$ and $f_2$ are frequencies defined in *bandwidth.*

NEMA Standard 9-17-1981.

**1.12** CENTROID OF A SURFACE means the point whose coordinates are the mean value of the coordinates of the surface.

NEMA Standard 9-17-1981.

**1.13** CONTINUOUS WAVEFORM means a *waveform* in which the *amplitude modulation factor* is less than or equal to 5 percent.

NEMA Standard 9-17-1981.

**1.14** DELIVERED ACOUSTIC ENERGY means the product of *ultrasonic power* and *exposure time.*

NEMA Standard 9-17-1981.

**1.15** DEPTH OF FOCUS means the distance along the *beam axis*, for a *focusing transducer assembly*, from the point where the *beam cross-sectional area* first becomes equal to four times the

Copyright National Electrical Manufacturers Association
Provided by IHS under license with NEMA
No reproduction or networking permitted without license from IHS
Not for Resale

*focal area* to the point beyond the *focal surface* where the *beam cross-sectional area* again becomes equal to four times the *focal area.*

NEMA Standard 9-17-1981.

**1.16** DUTY FACTOR means the product of the *pulse duration* and the *pulse repetition frequency* for a *pulsed waveform.* NEMA Standard 9-17-1981.

**1.17** EFFECTIVE RADIUS means the radius $a_e$ which is determined by comparison of the measured directional response at frequency $f$ with the theoretical directivity function for the active element at that frequency. More specifically for use with this standard, the measured half angles at the $-3$ dB and $-6$ dB points of the hydrophone directivity pattern at two given frequencies are employed in the *far field* directivity equation of a circular aperature to calculate radii which are averaged to obtain an effective radius for the hydrophone.

NEMA Standard 9-17-1981.

**1.18** ENTRANCE BEAM DIMENSIONS means the dimensions of the *beam cross-sectional area* where the beam enters the patient. For contact transducers these dimensions can be taken as the dimensions of the radiating element, if so stated.

NEMA Standard 9-17-1981.

**1.19** ENTRANCE DIMENSIONS OF THE SCAN, for auto-scanning systems, means the dimensions of the *scan cross-sectional area* over the surface through which the scan beams enter the patient. NEMA Standard 9-17-1981.

**1.20** ENVELOPE means a smooth curve connecting the peaks of successive cycles of a *waveform.*

NEMA Standard 9-17-1981.

**1.21** EXPOSURE TIME means the total amount of time the *transducer assembly* is delivering *ultrasonic power* to the patient. For pulsed systems, the *exposure time* is meant to include both the time when the *transducer assembly* is transmitting and not being pulsed. NEMA Standard 9-17-1981.

**1.22** FAR FIELD means that region of the field in which the acoustic energy flow proceeds essentially as though coming from a point source located in the vicinity of the *transducer assembly.* (Note: For an unfocused *transducer assembly,* this is commonly at a distance greater than $S/\pi\lambda$ where $S$ is the *radiating cross-sectional area* and $\lambda$ is the acoustic *wavelength* in the medium.) NEMA Standard 9-17-1981.

**1.23** FOCAL AREA means the *beam cross-sectional area* on the *focal surface.*

NEMA Standard 9-17-1981.

**1.24** FOCAL LENGTH means the distance along the *beam axis* from the *centroid* of the *radiating cross-sectional area* of a *focusing transducer assembly* to the *focal surface.*

NEMA Standard 9-17-1981.

**1.25** FOCAL SURFACE means the surface which contains the smallest of all *beam cross-sectional areas* of a *focusing transducer assembly.*

NEMA Standard 9-17-1981.

**1.26** FOCUSING TRANSDUCER ASSEMBLY means a *transducer assembly* in which the ratio of the smallest *beam cross-sectional area* to *radiating cross-sectional area* is less than one-fourth.

NEMA Standard 9-17-1981.

**1.27** FRACTIONAL BANDWIDTH means *bandwidth* divided by *center frequency.*

NEMA Standard 9-17-1981.

**1.28** INTENSITY mean the instantaneous acoustic power transmitted in the direction of acoustic wave propagation, per unit area normal to this direction, at the point considered.

For measurement purposes, this point is restricted to where it is reasonable to assume that the *acoustic pressure* and particle velocity are in phase, viz, in the *far-field* or the area near the *focal surface.* Under such conditions, the intensity be expressed as

$$I = P^2/\varrho c$$

where $P$ is the instantaneous *acoustic pressure,* $\varrho$ is the density of the medium, and $c$ is the velocity of sound in the medium. (Note: The cross-sectional measuring area at the point in space must be as small as practicable, generally no larger than $(c/f_c)^2$, where $f_c$ is the *center frequency,* with the technique and dimensions specified.)
(Note: See also definitions below for *pulse average, temporal peak, spatial average—pulse average, spatial average—temporal average, spatial peak—pulse average, spatial peak—temporal average,* and *spatial peak—temporal peak intensities.*)

NEMA Standard 9-17-1981.

**1.29** INTENSITY RESPONSE FACTOR means the received hydrophone voltage squared per unit

Copyright National Electrical Manufacturers Association
Provided by IHS under license with NEMA
No reproduction or networking permitted without license from IHS
Not for Resale

of *intensity* in a plane wave of specified frequency $f$ in water at a specified temperature. This factor is symbolized by $K_f^2$. NEMA Standard 9-17-1981.

**1.30** NARROWBAND TRANSDUCER means a transducer with a *fractional bandwidth* less than 15 percent.

NEMA Standard 9-17-1981.

**1.31** PULSE AVERAGE INTENSITY means the ratio of the *pulse intensity integral* to the *pulse duration.*

NEMA Standard 9-17-1981.

**1.32** PULSE DURATION means 1.25 times the interval between the time when the time integral of *intensity* in an acoustic pulse at a point reaches 10 percent and 90 percent of its final value. The final value of the time integral of *intensity* is the *pulse intensity integral.*

NEMA Standard 9-17-1981.

**1.33** PULSE INTENSITY INTEGRAL means the time integral of *intensity*, for any specific point and pulse, integrated over the time in which the *envelope* of *acoustic pressure* or hydrophone signal for the specific pulse is non-zero. For a *transducer assembly* operating in a non-auto-scanning mode, this is equivalent to the product of *temporal average intensity* and pulse repetition period.

NEMA Standard 9-17-1981.

**1.34** PULSE REPETITION FREQUENCY means the repetition frequency of the pulses of a *pulsed waveform.* Its inverse, the pulse repetition period, is the time interval between the same point on the *waveform* of two successive pulses.

NEMA Standard 9-17-1981.

**1.35** PULSED WAVEFORM means a *waveform* in which $B$ defined in the *amplitude modulation factor* is equal to the ambient noise level for a time greater than the *pulse duration.*

NEMA Standard 9-17-1981.

**1.36** RADIATING CROSS-SECTIONAL AREA means the area at and parallel to the transducer face consisting of all points where the *acoustic pressure* is greater than 10 percent of the maximum *acoustic pressure* in that plane. The area of the active element of the *transducer assembly* may be taken as an approximation for the *radiating cross-sectional area.*

NEMA Standard 9-17-1981.

**1.37** SCAN CROSS-SECTIONAL AREA, for auto-scanning systems, means the area, on the surface considered, consisting of all points occuring within the *beam cross-sectional area* of any beam passing through the surface during the scan.

NEMA Standard 9-17-1981.

**1.38** SCAN REPETITION FREQUENCY means the repetition frequency of a complete scan in angle or position, for automatic scanning systems only.

NEMA Standard 9-17-1981.

**1.39** SPATIAL AVERAGE INTENSITY is the same as *spatial average-temporal average intensity.* Generally, this parameter is used when specifying the *continuous waveform.* NEMA Standard 9-17-1981.

**1.40** SPATIAL AVERAGE-PULSE AVERAGE INTENSITY (SAPA) means the *pulse average intensity* averaged over the *beam cross-sectional area.* (May be approximated as the ratio of *ultrasonic power* to the product of *duty factor* and *beam cross-sectional area.*)

NEMA Standard 9-17-1981.

**1.41** SPATIAL AVERAGE-TEMPORAL AVERAGE INTENSITY (SATA), for auto-scanning systems, means the *temporal average intensity* averaged over the *scan cross-sectional area* on a surface specified (may be approximated as the ratio of *ultrasonic power* to the *scan cross-sectional area* or as the mean value of that ratio if it is not the same for each scan); for non-auto-scanning systems, SATA means the *temporal average intensity* averaged over the *beam cross-sectional area* (may be approximated as the ratio of *ultrasonic power* to the *beam cross-sectional area.*)

NEMA Standard 9-17-1981.

**1.42** SPATIAL PEAK-PULSE AVERAGE INTENSITY (SPPA) means the value of the *pulse average intensity* at the point in the acoustic field where the *pulse average intensity* is a maximum or is a local maximum within a specified region.

NEMA Standard 9-17-1981.

**1.43** SPATIAL PEAK-TEMPORAL AVERAGE INTENSITY (SPTA) means the value of the *temporal average intensity* at the point in the acoustic field where the *temporal average intensity* is a maximum, or is a local maximum within a specified region.

NEMA Standard 9-17-1981.

Copyright National Electrical Manufacturers Association
Provided by IHS under license with NEMA
No reproduction or networking permitted without license from IHS

Not for Resale

**1.44** SPATIAL PEAK-TEMPORAL PEAK INTENSITY (SPTP) means the value of the *temporal peak intensity* at the point in the acoustic field where the *temporal peak intensity* is a maximum, or is a local maximum within a specified region.

NEMA Standard 9-17-1981.

**1.45** TEMPORAL AVERAGE INTENSITY means the time-average of *intensity* at a point in space; equal to the mean value of the *intensity* at the point considered. For non-auto-scanning systems, the average is taken over one or more pulse repetition periods. For auto-scanning systems, the *intensity* is averaged over one or more scan repetition periods for a specified operating mode.

NEMA Standard 9-17-1981.

**1.46** TEMPORAL PEAK INTENSITY means the peak value of the *intensity* at the point considered.

NEMA Standard 9-17-1981.

**1.47** TRANSDUCER ASSEMBLY means that portion of a fully-assembled ultrasonic product that is designed to emit and/or receive ultrasonic radiation and which includes one or more ultrasonic transducers, housing, and integral cable if present.

NEMA Standard 9-17-1981.

**1.48** ULTRASONIC POWER means the temporal-average power emitted in the form of ultrasonic radiation by the *transducer assembly*.

NEMA Standard 9-17-1981.

**1.49** WAVEFORM means the graphical description of an acoustical or electrical parameter as a function of time.

NEMA Standard 9-17-1981.

**1.50** WAVELENGTH means the ratio of the speed of sound in the medium to the *center frequency*.

NEMA Standard 9-17-1981.

**1.51** WORKING FREQUENCY RANGE means the range of frequencies over which a hydrophone must be calibrated to perform measurements according to this standard. This frequency range must include all frequencies at which the transmitted acoustic power spectrum exceeds $1/10$ of the peak value in the spectrum for any acoustic field to be evaluated with the hydrophone.

NEMA Standard 9-17-1981.

**1.52** Provided below is a complete listing of the titles and publication numbers of all standards referenced, in part or in full, in this standards publication. The mailing address of each referenced organization is also provided.

IEC Standard Publication 601-1, First Edition, 1977
*Safety of Medical Electrical Equipment, Part 1: General Requirements.*

IEC Technical Committee No. 29: Electroacoustics, Subcommittee 29D: Ultrasonics
*The Characteristics and Calibration of Hydrophones for Operation in the Range 0.5 MHz to 15 MHz,* Draft Standard

Central Office of the IEC
1, Rue do Varembe
1211 Geneva 20, Switzerland

U.S. National Committee of the IEC
American National Standards Institute, Inc.
1430 Broadway
New York, New York 10018

*Safe Current Limits for Electromedical Apparatus,* AAMI/ANSI 12/78

Association For the Advancement of Medical Instrumentation
1901 N. Fort Myer Drive
Suite 602
Arlington, VA 22209

Copyright National Electrical Manufacturers Association
Provided by IHS under license with NEMA
No reproduction or networking permitted without license from IHS

Not for Resale

# Section 2
# ACOUSTIC LABELING REQUIREMENTS

## 2.1 GENERAL

The manufacturer shall specify in the operating and maintenance manuals the values of the variables listed in 2.5. Such values shall refer to the generic type of equipment rather than to individual instruments. These values shall be quoted for each operating mode, such as pulsed Doppler, manual scanning pulse echo, automatic scanning pulse echo, and so forth.

When instrument capabilities are changed through equipment modifications by the manufacturer or with its permission, the manufacturer shall provide information on parameter changes associated with the modifications.

A label shall be affixed to each instrument on the front panel, or in the case of restricted front panel, in a position clearly visible to the operator, which shall state: "Use of Minimum Practical *Acoustical Exposure* is Prudent—See Operator's Manual."

For *transducer assemblies* sold directly to clinical end-users for use with equipment manufactured by other companies, the *transducer assembly* manufacturer shall specify the parameters of 2.5 through 2.6 with reference to the instrument with which the *transducer assembly* is to be used.

NEMA Standard 9-17-1981.

## 2.2 NOMINAL VALUE

In addition to specifying values pursuant to 2.1, the manufacturer may optionally specify a nominal value for the variables listed in 2.5.

Authorized Engineering Information 9-17-1981.

## 2.3 SPECIFIC VALUE OF EACH INSTRUMENT

In addition to specifying values pursuant to 2.1, the manufacturer may optionally specify the specific value of each instrument for the variables listed in 2.5.

Authorized Engineering Information 9-17-1981.

## 2.4 IDENTIFICATION OF MEASUREMENT METHOD

In specifying values for the variables listed in 2.5, the manufacturer shall use the prescribed measurement method set forth in Section 3 for each corresponding variable or equivalent method. If another method is employed, the manufacturer shall show the equivalence to the prescribed method as necessary to meet the labeling requirements.

NEMA Standard 9-17-1981.

## 2.5 LABELING REQUIREMENTS

For each generic combination of system and interchangeable *transducer assembly* the parameters of 2.5.1, 2.5.2, and 2.5.3 shall be specified at the operating modes, control settings, *pulse repetition frequencies,* and field positions, (*beam axis* orientations and distances, from the *transducer assembly)* which produce the prescribed values. The operating modes, control settings, *pulse repetition frequencies,* and field positions of each of the parameter measurements shall be specified.

NEMA Standard 9-17-1981.

### 2.5.1 Acoustic Output

a. The *absolute maximum ultrasonic power.*

b. The *absolute maximum spatial peak-temporal average intensity* (SPTA).

c. The *absolute maximum spatial peak-pulse average intensity* (SPPA).

d. With the same operating mode, control settings, and *pulse repetition frequencies* of measurement (b) above, the *absolute maximum spatial average-temporal average intensity* (SATA) in the plane normal to the *beam axis* containing the point of *absolute maximum spatial peak-temporal average intensity.*

If an ultrasound power control or indicator is provided, this control or indicator shall be calibrated such that the operator will know the percentage of maximum *ultrasonic power* being delivered by the instrument in combination with any compatible transducer with an accuracy of ± 25 percent of maximum *ultrasonic power* output.

NEMA Standard 9-17-1981.

### 2.5.2 Transducer Assembly

The *absolute maximum* and *absolute minimum* values of parameters (*a-e*) shall be specified for radiated field (including variable focusing on transmission, if applicable).

a. *Center frequency.*
b. *Fractional bandwidth.*
c. *Entrance beam dimensions.*
d. *Focal length* and *depth of focus,* if focused.
e. *Focal area,* if focused.

Copyright National Electrical Manufacturers Association
Provided by IHS under license with NEMA
No reproduction or networking permitted without license from IHS
Not for Resale

Each *transducer assembly* which can be used with the instrument shall have the following clearly and indelibly marked on the case:

a. Model Number
b. Serial Number

NEMA Standard 9-17-1981.

### 2.5.3 Automatic Scanning Instruments

For each operating mode, the following additional items shall be specified:

a. Type of scan (sector, rectilinear, interlaced, and so forth).

b. Method of directing acoustic field (piezoelectric array, single element, mechanical, and so forth).

c. *Scan cross-sectional area.*

d. *Entrance dimensions of the scan.*

e. Dimensions of image plane.

f. *Scan repetition frequency* (nominal value).

g. Number of discrete acoustic lines per scan (nominal value).

h. Time of scan during formation of a single image (nominal value).

NEMA Standard 9-17-1981.

## 2.6 OPERATING INFORMATION REQUIREMENTS

User-oriented operating instructions shall be provided, including a description of those controls and procedures that can be used to reduce *acoustical exposure.*

NEMA Standard 9-17-1981.

Copyright National Electrical Manufacturers Association
Provided by IHS under license with NEMA
No reproduction or networking permitted without license from IHS

Not for Resale

# Section 3

# ACOUSTIC MEASUREMENT METHODS

## 3.1 GENERAL

The following measurements shall be made under free-field (no standing wave) conditions in degassed water. For systems with a variable *pulse repetition frequency* both maximum and minimum values shall be measured.

A general reference describing these measurements is: W. D. O'Brien, Jr., *Ultrasonic Dosimetry,* Chapter V, "Ultrasound: Its Application in Medicine and Biology," pp. 343-391, F. J. Fry, Ed., Elsevier Scientific Publishing Co., New York, 1978.

NEMA Standard 9-17-1981.

## 3.2 ULTRASONIC POWER

Units: watts

Maximum expected uncertainty shall be ± 10 percent when calibrating source transducers for hydrophone calibration and ± 20 percent for power output labeling.

References:

1. J. A. Rooney, "Determination of Acoustic Power Outputs in the Microwatt-Milliwatt Range", Ultrasound in Medicine and Biology **1**:12-16, 1973.

2. T. L. Zapf, "Calibration of Quartz Transducers as Ultrasonic Power Standards by an Electrical Method", 1974 Ultrasonics Symposium Proceedings, IEEE Catalog No. 74 CHO 896-ISU pp. 45-50, IEEE, New York, New York.

3. D.G. Eitzen, "International Intercomparison—CW Ultrasonic Beam Power Measurements, Procedures and Instructions", Ultrasonic Standards Section, National Bureau of Standards, Washington, D.C. 20234.

4. M. Greenspan, F. R. Breckenridge and C. E. Tschiegg, "Ultrasonic Transducer Power Output by Modulated Radiation Pressure", J. Acoust. Soc. Am. **63**:1031-1038, 1978.

5. L. L. Nider, "Ultrasonic Power Measurement with a Radiation Force Balance", Master's Thesis, Department of Electrical Engineering, University of Illinois, Urbana, Illinois, 1978.

6. P. L. Carson and R. A. Banjavic, "Radiation Force Balance Systems for Precise Acoustic Power Measurement," AIP Document PAPS JASMA-70-...-31, American Institute of Physics, New York, NY 1980.

7. G. W. C. Kaye and T. H. Laby, *Tables of Physical and Chemical Constants,* 14th Ed., pp. 62-69, Longman, New York.

NEMA Standard 9-17-1981.

### 3.2.1 MEASUREMENT METHOD—RADIATION FORCE BALANCE

The device described in References 1 and 6 shall be recommended. It uses a commercial analytical balance to measure the radiation force on an absorbing target in degassed water at 24 ± 3°C. The analytical balance includes a galvanometer with electronic feedback to maintain constant absorber position with changes in the applied radiation force due to the ultrasound field. Suitable target materials, currently available, include B.F. Goodrich SOAB rubber and Wallgone™ 1100 LT.[1]

The ultrasonic attenuation coefficient of pure water at 24°C is $1.91 \times 10^{-3}\ f^2$ dB/cm for the frequency range 1-100 MHz, where $f$ is the frequency in MHz. Corrections shall be made for losses in water when those losses exceed 5 percent in intensity.

NEMA Standard 9-17-1981.

### 3.2.2 CALIBRATION METHODS

Equipment needed shall include:

a. NBS calibrated quartz transducer or NBS calibrated in-house transducers.

b. Calibrated radio-frequency voltmeter or calibrated oscilloscope, calibration traceable to National Bureau of Standards.[2]

c. 5 watt power amplifier.

d. Signal generator.

e. Frequency counter.

NEMA Standard 9-17-1981.

#### 3.2.2.1 NBS STANDARD QUARTZ TRANSDUCER

Calibrated standard half-wave resonant, air-backed, quartz ultrasonic transducers may be used for power output calibration of the balance. These are described in References 2 and 3 of 3.2.

These transducers may be obtained on loan from the National Bureau of Standards for a fee which includes recalibration after use. Calibrated trans-

[1] Distributor for Wallgone ™ is Consumer Usage Laboratories, 5305 Trailway Drive, Rockville, MD 20853.

[2] Accuracy of 5 percent including any necessary accessories such as voltage dividers.

Copyright National Electrical Manufacturers Association
Provided by IHS under license with NEMA
No reproduction or networking permitted without license from IHS
Not for Resale

ducers are available at resonant frequencies of 1, 2, 3, 5, 10, and 15 MHz. The use of the third harmonics of the transducers resonant at 2 and 3 MHz, respectively, also allows frequencies of 6 and 9 MHz to be obtained for calibration purposes.

Authorized Engineering Information 9-17-1981.

#### 3.2.2.2 IN-HOUSE CALIBRATED SOURCE TRANSDUCERS

In-house source transducers which have been sent to NBS for measurement of the radiated power coefficient, $\gamma_r$, in units of watts per applied voltage squared, as a function of frequency may also be used for balance calibration. The NBS calibration procedure is described in Reference 4 of 3.2. The number of source transducers needed depends on the *working frequency range* of the transducers to be measured. The discussion of Appendix E, E1.1.2 applies to these choices. NOTE: Care must be excercised when specifying the NBS radiated power coefficient measurements of broadband pulse-echo ceramic transducers. If sufficient heating of the piezoelectric material is generated during the radiated power coefficient measurements, the power output may change over 100 percent. Prior to NBS calibration, the power output should be measured as a function of the input continuous wave (*CW*) voltage at the frequency of maximum $\gamma_r$ at the end of both "short" ($t \leq 0.5$ min) and "long" ($t \geq 3.0$ min) excitation times. The maximum excitation voltage should be noted for which the power output does not change by more than 5 percent between the short and long premeasurement on-times. This rms voltage value then should be indicated as the maximum applied voltage to be used by NBS when performing the radiated power coefficient measurements, even if the continuous plot of the radiated power coefficient versus frequency does not exceed the noise level at all points. The source transducers should be remeasured at their peak power output frequencies upon return from NBS to assure that no damage was incurred during transportation.

Authorized Engineering Information 9-17-1981.

### 3.3 INTENSITY

Units: watts/cm$^2$ (1 watt/cm$^2$ = $10^4$ watts/m$^2$

Measurement method shall be miniature hydrophone and scanning apparatus. When the specified procedures are followed with care, the maximum expected uncertainty at the 68 percent ($1\sigma$) confidence level should be less than the following values:

±25 percent for *spatial peak—temporal average intensity ($I_{SPTA}$)*

±30 percent for *spatial average—temporal average intensity ($I_{SATA}$)*

±35 percent for *spatial peak—pulse average intensity ($I_{SPPA}$)*

Note: Higher uncertainties are acceptable when they are known and added to measurements to provide *absolute maximum* values of power and *intensity* as specified in 2.5.

References:

1. P. L. Carson, P. R. Fischella, T. V. Oughton, "Ultrasonic Power and Intensities Produced by Diagnostic Ultrasound Equipment", Ultrasound in Medicine and Biology **3**:4, 341-350, 1978.

2. P. R. Fischella, P. L. Carson, "Assessment of Errors in Intensity Measurements of Pulse Echo Ultrasound Using Miniature Hydrophones", Medical Physics **6**:5, 404-411, 1979.

3. K. Brendel, et al., "Methods of Measuring the Performance of Ultrasonic Pulse Echo Diagnostic Equipment", Ultrasound in Medicine and Biology **2**:343-350, 1976.

4. S. M. Jones, P. L. Carson, R. A. Banjavic, and C. R. Meyer, "Simplified Technique for the Calibration and Use of a Miniature Hydrophone in Intensity Measurements of Pulsed Ultrasound Fields," J. Acoust. Soc. Am., **70**, (Nov.) 1981 In Press

NEMA Standard 9-17-1981.

#### 3.3.1 Characteristics of Hydrophone and Preamplifier

Purpose: The following characteristics for the calibrated hydrophone and preamplifier are the minimum requirements such that the maximum expected uncertainties for the output labeling required in 2.5 can be achieved. A recommended hydrophone calibration procedure is given in Appendix E.

NEMA Standard 9-17-1981.

#### 3.3.1.1 CONSTRUCTION AND SIZE

The piezoelectric polymer, polyvinylidene fluoride PFV2, is recommended for the active element because of its smooth response as a function of frequency relative to other materials presently available (see 3.3.1.2). The active element shall exhibit a resonance frequency of at least 25 MHz. The hydrophone should have a nominal *effective radius* less than 0.5 $\lambda_c F/D$. Here $F$ is the focal

Copyright National Electrical Manufacturers Association
Provided by IHS under license with NEMA
No reproduction or networking permitted without license from IHS
Not for Resale

length, $D$ is the diameter and $\lambda_c$ is the *wavelength* in pure water at the *center frequency*, $f_c$, of any transducer to be examined. In practice, a nominal *effective radius* less than or equal to 0.50 mm is recommended for most applications up to 10 MHz, but even for this radius, corrections for spatial averaging may be required when the effective radius exceeds $0.5\ \lambda_c F/D$ (see 3.3.1.3).

NEMA Standard 9-17-1981.

### 3.3.1.2 Intensity Response Factor and Frequency Response

The *intensity response factor* of the hydrophone, together with any integral amplifier and electronic filter shall be known over the *working frequency range* to an accuracy of ±20 percent at the 68 percent confidence level. The finished probe, together with any integral amplifier, shall have a free field *intensity response factor* which is constant to ± 1.5 dB over any one octave in the *working frequency range*. That is, over any one octave in the *working frequency range*, the *intensity response factor*, $K_f^2$, shall not differ from the mean value of $K_f^2$ in that one octave region by greater than +41 percent or −29 percent. Hydrophones constructed with active elements using materials other than PVF2 must be tested also to verify that their *intensity response factor* does not vary by greater than ±1dB over any 100 kHz frequency interval in the *working frequency range*. The time interval between determinations of the *intensity response factor* shall be dependent upon the thermal and temporal stability as defined in 3.3.1.6 and 3.3.1.7.

NEMA Standard 9-17-1981.

### 3.3.1.3 Effective Radius

The *effective radius* of the hydrophone, $a_e$, shall be determined at each of two frequencies; one at or above the maximum frequency, $f_{max}$, and one near the median frequency, $(0.5 \pm 0.1)\ (f_{max} + f_{min})$, of the *working frequency range*. These two values shall be within ±30 percent of the nominal *effective radius*, $a$, of the active element. That is,

$$\frac{|\ a_e - a\ |}{a} \leqslant 0.3$$

NEMA Standard 9-17-1981.

### 3.3.1.4 Linearity

The hydrophone probe and amplifier combination should exhibit a linear response to *acoustic pressure* over the range of *spatial peak—temporal peak intensities* to be measured, that is, from the maximum expected *SPTP intensity*, $I_{SPTP,\ max}$ to $I_{SPTP,\ min}$ (defined as ⅕ of the minimum expected *SPTP intensity*.) In general, this linear range should be from 0.2 mW/cm² to 2000 W/cm² or 70 dB.[3] When these criteria on linearity cannot be met, the criteria presented in E1.1.6 of Appendix E are recommended. The linear response over this range should be within ±10 percent and shall not exceed +100 percent or −50 percent. Hydrophones which exceed the ± 10 percent limit on linearity shall be supplied with a conversion chart to correct the output readings and these corrections must be used in all calculations employing hydrophone data.

NEMA Standard 9-17-1981.

### 3.3.1.5 Signal-to-Noise Ratio

The signal-to-noise ratio measured at the output of the hydrophone or hydrophone plus integral preamplifier, using a device of specified impedance, shall be at least 5 to 1 in rms voltage for an *intensity* at the hydrophone equal to $I_{SPTP,\ min}$ of 3.3.1.4 where the noise is measured in the passband of the *working frequency range*.[4]

NEMA Standard 9-17-1981.

### 3.3.1.6 Temperature Coefficient

In the temperature range of 18°C to 30°C, the hydrophone pressure response shall not deviate more than ±½ dB from the value at 24°C unless a temperature correction curve is given.

NEMA Standard 9-17-1981.

### 3.3.1.7 Temporal Stability

The temporal stability of the hydrophone shall be such that the *intensity response factor* of the probe at any calibration frequency in the *working frequency range* and at a specified temperature does not vary more than ±½ dB when checked quarterly and calibrated annually when the hydrophone is used in accordance with the recommended storage and operation procedures (see E1.1.8 of Appendix E).

NEMA Standard 9-17-1981.

---

[3] See Appendix A of Reference 1 of 3.3 for a direct indication of *SPTP intensities* which might be expected with various types of systems. Alternatively, Appendix B of this reference may be used to estimate the expected *SPTP intensities* by multiplying the *SPPA intensities* by the factor 10. As an example of linearity and signal-to-noise requirements, consider a hydrophone which is to be employed with a pulse echo system producing $I_{SPTP,\ max}$ = 2000 W/cm² and a Doppler ultrasound unit with $I_{SPTP} = 2\ I_{SPTA}$ = 1 mW/cm². The hydrophone must be linear between 2000 W/cm² and 0.2 mW/cm² = (⅕) $I_{SPTP,\ min}$. That is, a linear range of 70 dB is required.

[4] The rms noise level of the hydrophone then must be less than $1/\sqrt{2}$ times the instantaneous voltage generated by an instantaneous *intensity* of 0.04 mW/cm² = (⅕₅) $I_{SPTP,\ min}$.

Copyright National Electrical Manufacturers Association
Provided by IHS under license with NEMA
No reproduction or networking permitted without license from IHS
Not for Resale

### 3.3.2 Measurements for Output Labeling

The purpose of this section shall be to describe the use of a calibrated hydrophone to acquire the necessary data for calculation of the three intensities of concern for labeling purposes. Among these data are the *beam cross-sectional area*, the temporal *waveform* and *pulse duration*. The three intensities of interest are the *spatial peak—temporal average intensity* ($I_{SPTA}$); the *spatial peak—pulse average intensity* ($I_{SPPA}$); and the *spatial average—temporal average intensity* ($I_{SATA}$).

NEMA Standard 9-17-1981.

#### 3.3.2.1 Scanning Tank, Positioning Device, and Measurement Electronics

##### 3.3.2.1.1 Scanning Tank

As in Reference 3 of 3.3, measurements of 3.3, 3.4, and hydrophone calibrations of Appendix E shall be performed in pure degassed water at 24 °C ± 3 °C (sound velocity = 1494 ± 5 m/sec + 6 m/sec °K).

Complete degassing may be difficult but sufficient degassing can be accomplished by exposing distilled water to a partial vacuum of at least 100 Pa or heating to approximately 80 °C for one hour or boiling for several minutes. Reabsorption of the air occurs with time so repetition of the degassing may be required.

The design of the scanning tank itself shall be such as to avoid interference from reflections from the tank walls or bottom or the water surface. This shall be accomplished by employing some or all of the following techniques:

a. The use of a tank of adequately large dimensions so that the positioning device can be free to move to its limits and so that any path lengths for returning reflections will be large with respect to the measurement distances.

b. Avoiding locating plane interfaces normal to the *beam axis* of the transmitting transducer.

c. Covering the inside scanning tank walls with absorbing material. For most uses, all inside walls of small tanks shall be coated. For large tanks, it shall be permitted to coat only those portions of the tank which may be intercepted by the transmitting transducer's *beam axis*. Possible coating materials shall include indented automobile rubber floor matting, butyl rubber, or rough or smooth Wallgone™ tiles[5], and so forth.

A good method of checking the adequacy of these procedures is to note the effect, on a received echo or hydrophone signal, of slight movements of the scanning tank relative to the positioning device. Any spurious reflection contributions should appear readily as distortions on the signal under study.

NEMA Standard 9-17-1981.

##### 3.3.2.1.2 Positioning Device

A positioning and scanning apparatus shall be required which will allow relative motion of the transmitting transducer and the hydrophone along three orthogonal axes, the $x$ and $y$ axes lying normal to the *beam axis* of the transmitting transducer and the $z$ axis which is parallel to the *beam axis* of the transmitting transducer. For alignment of the *beam axis* relative to this scanning coordinate system, a planar reflection must be available which can be attached rigidly at a location beyond the near field of the transmitting transducer and parallel to the $x$-$y$ scan plane. It often is convenient for this alignment plate to be rigidly attached to the bottom or side of the scanning tank. A dial indicator will be useful in assuring that the planar reflector alignment plate is parallel to both the $x$ and $y$ axis. Provision also shall be made for tilting the transmitting transducer about two orthogonal axes which are approximately normal to the $z$ axis. Capabilities shall be provided for rotating the hydrophone through measured angles ($\theta_x$) about an axis which is parallel to the $y$ axis and passes through the center of the active element of the hydrophone.

The above six degrees of freedom shall be continuously adjustable or adjustable in increments of not greater than the following values: ± 0.3 mm or the wavelength in water at the maximum frequency of the ultrasound system being measured for the $x$ and $y$ scanning directions; ± 5 mm for the $z$ axis; ± 2° for $\theta_x$. In addition, readout accuracy in these scanning directions shall be at least as good as the following: ± 0.4 mm for the $x$ and $y$ axis and ± 0.5 mm for the $z$ axis. An example of one of many possible configurations meeting these requirements is illustrated in Figure 3-1. Likewise, a positioning system can be utilized which allows motion in a polar coordinate system defined by $r$ and $\theta$, where $r$ lies along the $z$ axis of Figure 3-1 and $\theta$ lies in the $x$-$z$ or $y$-$z$ plane. The origin of this coordinate system would be at the transmitting *transducer assembly.*

NEMA Standard 9-17-1981.

##### 3.3.2.1.3 Measurement Electronics

The search for the location of most of the measurement planes and the beam profiles for measure-

[5] Distributor for Wallgone ™ is Consumer Usage Laboratories, 5305 Trailway Drive, Rockville, MD 20853.

Copyright National Electrical Manufacturers Association
Provided by IHS under license with NEMA
No reproduction or networking permitted without license from IHS
Not for Resale

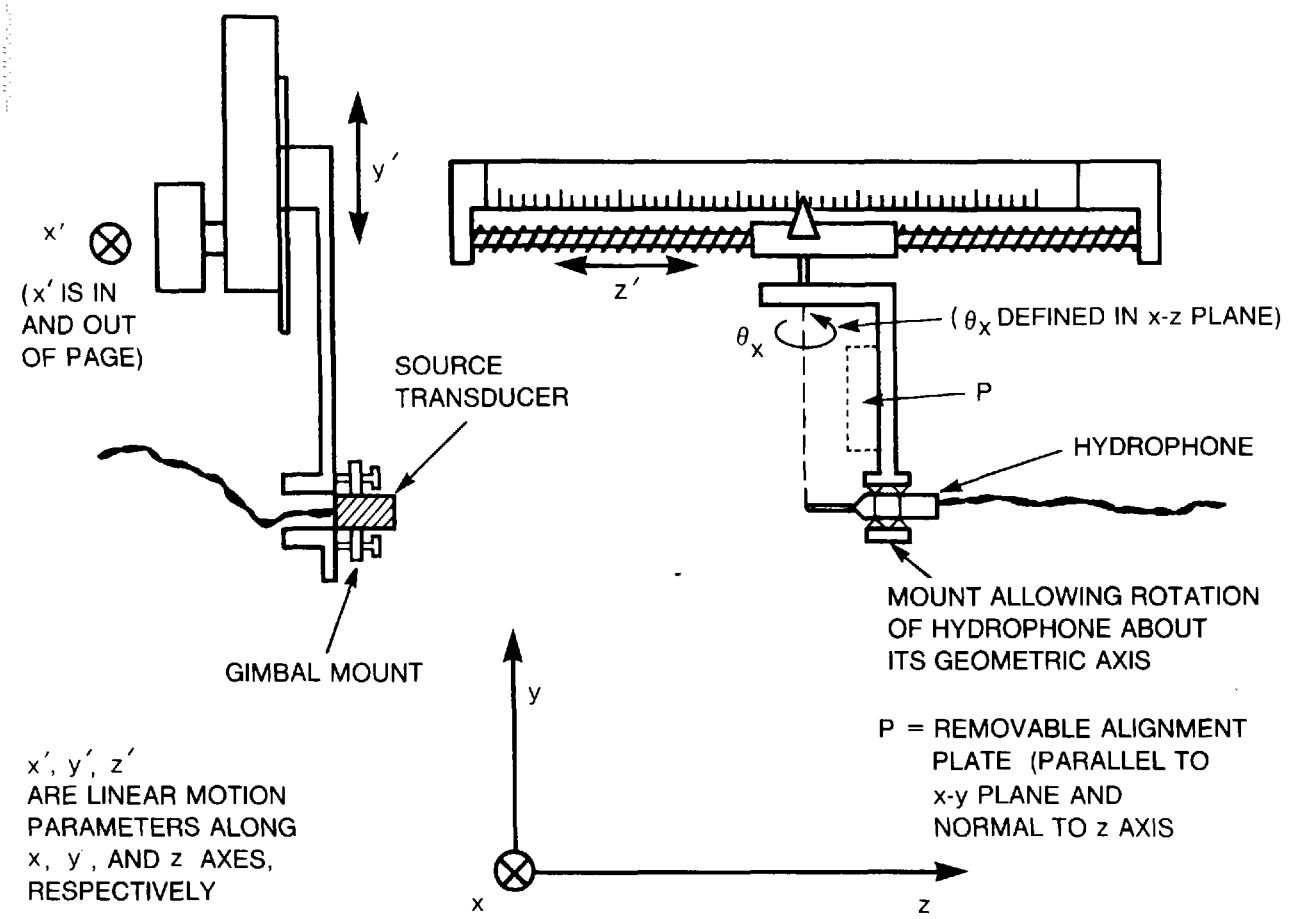


**Figure 3-1**
**EXAMPLE OF SCANNING MECHANISM**

Copyright National Electrical Manufacturers Association
Provided by IHS under license with NEMA
No reproduction or networking permitted without license from IHS
Not for Resale

ment of *spatial average—temporal average intensity* are based on measurements of the *pulse intensity integral.* This requires a rapid method to square the hydrophone signal, integrate it over the entire time period of the pulse, and record or plot the results. This may be accomplished with analog or digital circuits with an input dynamic range of at least 20 dB over the *working frequency range*, and an oscilloscope for display and recording. Only when complete beam profiles are recorded to normalize the hydrophone response to total acoustic power would scale changes be required to extend the dynamic range beyond 20 dB.

In many systems operating at all but the highest *temporal peak intensities*, the *spatial peak—temporal peak intensity* occurs at the same location in the field as the maximum *pulse intensity integral.* For those same systems, the shape of the pressure *waveform* is reasonably constant across the beam profile (2). Under these conditions, the temporal peak voltage in the hydrophone *waveform* may be measured with an oscilloscope and squared as necessary (1,2,4) to replace the measurement of the *pulse intensity integral.* These latter conditions would apply to continuous wave systems.

Authorized Engineering Information 9-17-1981.

### 3.3.2.2 Location of the Point of the Spatial Peak of the Pulse Intensity Integral

The transducer to be examined, transducer A, shall be mounted in the positioning device described in 3.3.2.1.2 so that its *beam axis* is normal to the orthogonal ($x$, $y$) directions and parallel to the axial ($z$) direction of the scanning apparatus. The hydrophone shall be mounted in the *far field* of transducer A with its axis of maximum sensitivity (determined from the directivity calibration) parallel to the $z$ axis and the *beam axis* of transducer A.

Transducer A shall be driven in the manner in which it is to be calibrated. The hydrophone then shall be translated in an $x$-$y$ plane in the *far field* of transducer A until the detected *pulse intensity integral* is maximized in that plane. This shall be accomplished conveniently with use of the electronics described in 3.3.2.1.3. Under conditions described in 3.3.2.1.3, the temporal peak hydrophone voltage may be maximized in place of the *pulse intensity integral.* At the point, the hydrophone's axis of maximum sensitivity and the *beam axis* of transducer A should be colinear.

The hydrophone then shall be moved axially toward transducer A until the *pulse intensity integral* (or peak voltage) of the received hydrophone signal is maximized. The hydrophone then shall be moved slightly in $x$ and $y$ to verify that the hydrophone is on the *beam axis* of transducer A. If an adjustment in $x$ and $y$ is required, the signal shall be maximized iteratively in $x$, $y$, and $z$ until the true, last point of the spatial peak of the *pulse intensity integral* (or *SPTP intensity*) is located. This point shall be designated $(x, y, z) = (0, 0, z_p)$ or $(r, z) = (o, z_p)$ in the case of cylindrical symmetry. If there is a range of distances from $z_1$ to $z_2$ from transducer A over which the temporal peak pressure amplitude is constant, then $z_p = (z_1 + z_2)/2$.

Caution shall be exercised with regard to two possible sources of error. Particularly with non-focused transducers, it shall be verified that the axial maximum position located is the last axial maximum and does not lie within the near field. As the hydrophone is moved off the *beam axis*, the the received signal level should decrease monotonically to the region where sidelobes are expected. Second, a check shall be performed to assure that the measurements provide the free field *waveform*, independent of interference such as multiple reflections between the transmitting transducer and the hydrophone. This shall be accomplished by applying a *pulsed waveform* to the transducer, changing the transducer to hydrophone separation, and detecting any signals which do not move at the same rate as the direct waves from the transducer to the hydrophone. Interference signals observed shall be acceptable if they will contribute less than 3 percent to the *temporal average intensity* in the *waveform* to be measured.

NEMA Standard 9-17-1981.

### 3.3.2.3 Recording of Temporal Waveform

With the hydrophone at the point of the spatial peak of the *pulse intensity integral* (or *SPTP intensity* for the conditions given in 3.3.2.1.3) the *waveform*, $V(0,t)$, shall be recorded in a manner which will allow calculation of the *spatial peak—temporal average intensity*, *spatial peak—pulse average intensity*, and *pulse duration* and will allow display of the recorded *waveform.* This may be accomplished digitally or photographically from a calibrated oscilloscope. The pulse repetition period also shall be recorded. Control settings shall be as specified in the first paragraph of 2.5. For example, it may be necessary to record the *waveform* and the pulse repetition period at different control settings for *pulse average* and *temporal average intensities.*

In addition, for auto-scanning and possible other systems, the point of *absolute maximum spatial peak—temporal average intensity* may differ

Copyright National Electrical Manufacturers Association
Provided by IHS under license with NEMA
No reproduction or networking permitted without license from IHS

Not for Resale

significantly from the point of the spatial peak of the *pulse intensity integral* (or the *SPTP intensity* for the conditions given in 3.3.2.1.3). In that case, the point of *maximum spatial peak—temporal average intensity* must be found and the hydrophone positioned there for recording of the necessary *waveform* or *waveforms*. That is, the *waveforms*, or at least their relative amplitudes, shall be recorded for all scan lines in an auto-scanning system which contribute to the *temporal average intensity* at the point of maximum *spatial peak—temporal average intensity*.

If a filter has been utilized as described in E1.1.6 of Appendix E to reduce the amplitude of the third harmonic and higher harmonics in the recorded *waveform*, the *waveform* shall be recorded both with and without the filter. Calculations of the quantities required for labeling may be performed on the filtered *waveform* if so stated.

NEMA Standard 9-17-1981.

### 3.3.2.4 CALCULATION OF $I_{SPTA}$

The maximum *spatial peak—temporal average intensity* ($I_{SPTA}$) shall be calculated using the following expression:

$$I_{SPTA} = \frac{1}{K_{f_c}^2 (t_2 - t_1)} \int_{t_1}^{t_2} V^2(t)\, dt,$$

where $V(t)$ is the *waveform* recorded in 3.3.2.3, and the quantity, $(t_2 - t_1)$ is the pulse repetition period, or one scan repetition period for auto-scanning systems. $K_{f_c}^2$ is the *intensity response factor* at the *center frequency*, $f_c$, for the transducer being calibrated as determined in Appendix E, E1.1.3. It shall be noted that when apparent distortions in the temporal *waveform* suggest severe nonlinearities in the source, medium, hydrophone, or amplifiers, complete beam profiles should be obtained and the hydrophone calibration performed on that spectrum, as other intensities are not reliable (4). $K_{f_c}^2$ then shall be calculated as outlined in References 1 and 4 by normalizing the hydrophone response to the radiation force measurement of power in the acoustic field being calibrated. Deconvolution of the hydrophone frequency response shall be permitted to compensate for nonlinearities in the source transducer or medium and for moderate deviations of the hydrophone frequency response from the specifications of 3.3.1.2 (see Reference 4).

NEMA Standard 9-17-1981.

### 3.3.2.5 CALCULATION OF $I_{SPPA}$

For nonautoscanning systems with a single beam, the *spatial peak—pulse average intensity* ($I_{SPPA}$) shall be determined using the following formula based upon the $I_{SPTA}$:

$$I_{SPPA} = I_{SPTA} \times 1/D.$$

where $D$ = the *duty factor* = *pulse duration* × *pulse repetition frequency*. The *pulse duration* is computed as specified in definition 1.32 of this standard using the equations at the end of this section. This *intensity* shall be determined under the conditions of the first paragraph of 2.5 in the plane of maximum $I_{SPTA}$.

For autoscanning systems, the maximum *spatial peak—pulse average intensity* shall be calculated using the following expression:

$$I_{SPPA} = \frac{1}{\tau K_{f_c}^2} \int_{t_3}^{t_4} V^2(t)dt$$

$$= \frac{1}{\tau}\, e(0)$$

where $V(t)$ is measured at the point described in 3.3.2.3, $\tau$ is the *pulse duration* and $e(0)$ is the value at the spatial peak of the *pulse intensity integral*. The time between $t_3$ and $t_4$ represents the time span over which the temporal *waveform* as recorded in par. 1 of 3.3.2.3 is non-zero. Pulse duration is calculated as: $\tau = 1.25\,(t_6 - t_5)$ where:

$$\int_0^{t_5} V^2(t)dt = 0.1 \int_{t_3}^{t_4} V^2(t)dt$$

$$\int_0^{t_6} V^2(t)dt = 0.9 \int_{t_3}^{t_4} V^2(t)dt$$

NEMA Standard 9-17-1981.

### 3.3.2.6 CALCULATION OF $I_{SATA}$

For all systems in which a beam can be held in one location, the *spatial average—temporal average intensity*, $I_{SATA}$, in the plane of *absolute maximum spatial peak—temporal average intensity* shall be calculated by averaging the *intensity* over the *beam cross-sectional area* in that plane or by the approximate method of dividing the total power by the *beam cross-sectional area*.

For transducers with a circular or rectangular aperture, the more accurate method of *intensity* averaging can be accomplished with a limited number of beam profiles.

The recommended calculation for a transducer of circular aperture is:

$$I_{SATA} = \left(\frac{\pi I_{SPTA}}{Ne(0)A_6}\right) \sum_{i=1}^{2N} \int_0^{r_{6,i}} e(r')r'\,dr'$$

Copyright National Electrical Manufacturers Association
Provided by IHS under license with NEMA
No reproduction or networking permitted without license from IHS

Not for Resale

where $2N$ is the number of radial scans, $N$ is the number of beam profiles, $r_{6,i}$ is the $-6$ dB radius of the $i^{th}$ radial scan, $A_6$ is the *beam cross-sectional area* and *e(r)* is the *pulse intensity integral* defined in 3.3.2.5. ($V_p^2(r)/K_{f_c}^2$ may be substituted for *e(r)* under conditions described in 3.3.2.3.)

The beam profiles are taken in orthogonal pairs through the point of the spatial peak of the *pulse intensity integral*, where the angular increments between these sets of lateral beam profiles shall be equal to 180° divided by the number of profiles. The minimum lateral displacement of the measurement points on the profiles shall be no greater than 0.5 mm with at least 20 points recorded. For transmitting transducers whose *effective radius* is five times or more the *effective radius* of the hydrophone, no directivity corrections should be required on the measurements. In other cases, a correction to account for hydrophone directivity may be required at certain frequencies.

For this approach to transducers of circular aperture, the equation to determine $A_6$ in the plane of the spatial peak of the *pulse intensity integral* is:

$$A_6 = \pi \left| \frac{\sum_{i=1}^{2N} r_{6,i}}{2N} \right|^2 ,$$

If, for any $r_{6,i}$,

$$\left| 1 - \frac{2N\, r_{6,i}}{\sum_{i=1}^{2N} r_{6,i}} \right| > 0.2,$$

the beam is asymmetric. If $N$ was less than four, additional beam profiles must be taken. $I_{SATA}$ and $A_6$ then must be calculated with at least four beam profiles, i.e., $N \geq 4$.

For transducers with a rectangular aperture, the following equation is recommended for determination of the *spatial average—temporal average intensity*:

$$I_{SATA} = \left( \frac{I_{SPTA}}{e\,(0,0)\, A_6'} \right) \int_{r_{6,-x}}^{r_{6,x}} \int_{r_{6,-y}}^{r_{6,y}} e^{1/2}(x,0)\, e^{1/2}(0,y)\, dx\, dy$$

where $e(x,0)$ and $e(0,y)$ are the *pulse intensity integral* amplitudes determined from two orthogonal beam profiles along lines normal to the *beam axis* and the sides of the rectangular transducer. (Again $V_p^2(x,y)/K_{f_c}^2$ may be substituted for *e(x,y)* under the conditions described in 3.3.2.3.)

In this case, $A_6'$ is the *beam cross-sectional area* in the plane of the spatial peak of the *pulse intensity integral*. For non-autoscanning systems and for rectangular aperture transducers, this area can be approximated by:

$$A_6' = \pi \left| \frac{\sum_{j=1}^{2} r_{6,j}}{2} \right| \left| \frac{\sum_{k=1}^{2} r_{6,k}}{2} \right|$$

where $r_{6,j}$ takes on the values $r_{6,+x}$ and $r_{6,-x}$ and $r_{6,k}$ takes on the values $r_{6,+y}$ and $r_{6,-y}$.

If for rectangular aperture transducers, for any $r_{6,+x}$ and $r_{6,-x}$ or for any $r_{6,+y}$ or $r_{6,-y}$.

$$\left| 1 - \frac{2r_{6,\pm x}}{r_{6,x} + r_{6,-x}} \right| > 0.2 \quad \text{or} \quad \left| 1 - \frac{2r_{6,\pm y}}{r_{6,y} + r_{6,-y}} \right| > 0.2,$$

a complete raster scan as described in Appendix E, E1.1.2 covering the main lobe of the transmitted beam shall be performed where the hydrophone's *pulse intensity integral* is recorded as a function of position. The lateral displacement of adjacent points in the $x$ or $y$ directions shall not exceed 0.5 mm. Using this two-dimensional array of spatial points, the *beam cross-sectional area* shall be given by the area of the region containing all points for which the hydrophone's *pulse intensity integral* is greater than or equal to one-fourth of its value at the point of the spatial peak of the *pulse intensity integral*. Directivity corrections shall be made when necessary as explained in E1.1.2.

For auto-scanning systems in which the beam cannot be held in one location, the *temporal average intensity* is averaged over the *scan cross-sectional area*. If the *scan cross-sectional area* changes from scan to scan in the scanning mode that maximizes $I_{SATA}$, an average of the various $I_{SATA}$'s in that mode shall be calculated.

For simplicity, the following approximate formula can be employed to calculate the *spatial average—temporal average intensity* in the plane of the spatial peak of the *pulse intensity integral* (or the plane of the maximum *spatial peak—temporal average intensity* if significantly different from the plane of the spatial peak of the *pulse intensity integral* for auto-scanning systems):

$$I_{SATA,\,W} = W/\tilde{A}_6$$

where $W$ is the *ultrasonic power* measured with the radiation force balance and $\tilde{A}_6$ takes on one of the following values:

Copyright National Electrical Manufacturers Association
Provided by IHS under license with NEMA
No reproduction or networking permitted without license from IHS

Not for Resale

For non-auto-scanning systems:

$\tilde{A}_6 =$ { $A_6$ the *beam cross-sectional area* for circular *transducer assemblies*; $A_6'$ the *beam cross-sectional area* for rectangular aperture *transducer assemblies* }

for auto-scanning systems:

$\tilde{A}_6 = A_6^s$ the *scan cross-sectional area* or its mean value when the *scan cross-sectional area* varies in the scan mode that maximizes $I_{SATA}$.

In most cases, this simpler calculation will give a considerably higher value for the *spatial average—temporal average intensity* than the value obtained from the more rigorous integral equations given previously.

NEMA Standard 9-17-1981.

## 3.4 MEASUREMENTS FOR TRANSDUCER LABELING AND ADDITIONAL LABELING FOR AUTOMATIC SCANNING INSTRUMENTATION

Maximum expected uncertainty shall be:

± 10 percent for *center frequency*

± 15 percent for *fractional bandwidth*

± 15 percent for *entrance beam dimensions*

± 5 percent for *focal length*, if applicable

± 15 percent for *depth of focus* and *focal area*, if applicable.

For additional labeling of automatic scanning instruments:

± 15 percent for dimensions of image plane

± 5 percent for *scan repetition frequency* and time of scan during formation of a single image

± 1 percent for the number of discrete acoustic lines per scan, ± 10 percent where justification is given.

References:

1. K. Erikson, "Tone-Burst Testing of Pulse-Echo Transducers," IEEE Transactions on Sonics and Ultrasonics **SU-26**:7-14, 1979.

2. R. A. Banjovic and J. A. Zagzebski, "Ultrasonic Pulse-Echo Beam Width and Axial Response Approximations for Clinical Broadband Focused Transducers," Ultrasound in Medicine and Biology 7:63-71, 1981.

3. G. Kossoff, "Analysis of Focusing Action of Spherically Curved Transducers," Ultrasound in Medicine and Biology **5**:359-365, 1979.

Measurement methods:

The purpose of this section is to indicate the method of measurement of those quantities which are specified for *Transducer Assembly* in 2.5.2 and Automatic Scanning Instruments in 2.5.3. The measurements in 3.4.1 and 3.4.2 shall be performed for the transmitted beam with a miniature hydrophone. The excitation source and transducer termination shall meet the requirements of Reference 1 above if the measurements are performed with a different source-receiver system than the one with which the transducer will be employed.

NEMA Standard 9-17-1981.

### 3.4.1 Frequency Related Measurements

Equipment needed shall include:

a. Transducer with excitation source

b. Gated sinewave generator and frequency counter or spectrum analyzer and stepless gate [6]

c. Calibrated oscilloscope

d. Calibrated miniature hydrophone.

For either continuous wave or *amplitude modulated waveforms*, the *waveform* shall be measured with an oscilloscope using a hydrophone located at the $S/(\pi\lambda)$ distance of an unfocused transducer and at the *focal length* of a focused transducer.

If different pulses are emitted, they must all be recorded. An electrical low pass filter shall be permitted to filter out third harmonic components from the *waveform*.

Using either the received hydrophone voltage amplitude as a function of frequency for transmitted tone burst pulses or direct spectrum analysis on the received hydrophone voltage *waveform* for both narrowband or broadband excitation, the *center frequency* and *fractional bandwidth* shall be determined as defined in Section I of this standard, namely:

$$\text{Center Frequency} = f_c = \frac{f_1 + f_2}{2} \text{ (MHz)}$$

$$\text{Fractional Bandwidth} - \text{Percent} = \Delta f\% = \frac{f_2 - f_1}{f_c} \times 100$$

[6] A stepless gate is an electronic gating function which passes the desired signal and attenuates the unwanted signal by more than 40 dB. The stepless gate does not introduce spurious signals into the measurement system greater than 40 dB re the measured signal.

Authorized Engineering Information 9-17-1981.

Copyright National Electrical Manufacturers Association
Provided by IHS under license with NEMA
No reproduction or networking permitted without license from IHS
Not for Resale

where $f_1$ and $f_2$ are the frequencies at which the received hydrophone voltage spectrum is 71 percent (−3 dB) of its maximum value.

NEMA Standard 9-17-1981.

### 3.4.2 Beam Profile Parameters

Equipment needed shall include:

A positioning device and scanning tank similar to that described in 3.3.2.1 is also required in addition to the equipment listed in 3.4.1.

Using a hydrophone for measurements on the transmitted beam, the parameters required for *transducer assembly* labeling in 2.6, defined in Section 1 and illustrated in Figure 3-2 shall be determined.

**Figure 3-2**

**BEAM PROFILE PARAMETERS FOR FOCUSED AND UNFOCUSED SINGLE ELEMENT TRANSDUCERS**

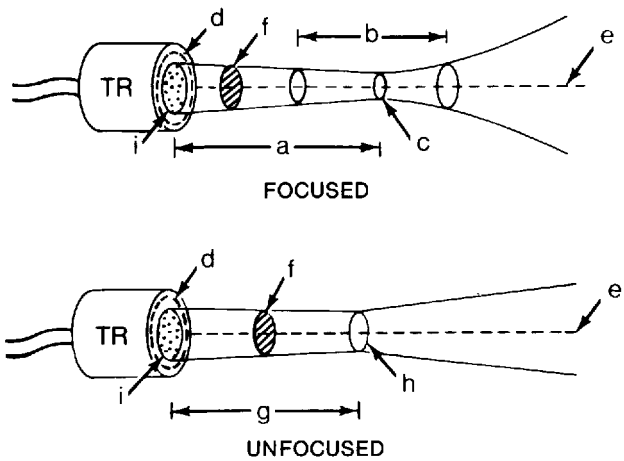


a = *Focal length.*

b = *Depth of focus* (cm).

c = *Focal area* (cm²).

d = *Radiating cross-sectional area-S.*

e = *Beam axis.*

f = *Beam cross-sectional area* (cm²).

g = transition distance $= \frac{S}{\pi\lambda}$ (cm).

h = *Beam cross-sectional area* at transition distance (cm²).

i = *Entrance beam dimensions* (cm²).

Acceptable approximations for the *focal length* and *depth of focus* are given in References 2 and 3. The *focal area* or other *beam cross-sectional areas* and *entrance beam dimensions* may be determined with the appropriate expressions listed in 3.3.2.6. Analogous formulas should be employed for determination of the *radiating cross-sectional area*, except the −6 dB radii are replaced by the −20 dB radii. The nominal active area of the transmitter element(s) also may be employed as the *radiating cross-sectional area*. In many water path systems and arrays with variable apertures, the *entrance beam dimensions* will assume a range of values. It will be necessary to determine those array conditions and those possible locations of beam entry into the patient where the *entrance beam dimensions* in units of cm² are a maximum and minimum.

NEMA Standard 9-17-1981.

### 3.4.3 Labeling Requirements for Automatic Scanning Systems

Equipment needed shall include:

a. Calibrated miniature hydrophone (see 3.3.1)

b. Calibrated oscilloscope

c. Positioning apparatus and scanning tank (see 3.3.2.1)

d. Frequency counter.

The quantities listed in 2.5.3 shall be determined for labeling purposes. In general, most are descriptive terms except for the following:

NEMA Standard 9-17-1981.

#### 3.4.3.1 Scan Repetition Frequency

The *scan repetition frequency* shall be measured with a miniature hydrophone in water or electronically, if more appropriate.

NEMA Standard 9-17-1981.

#### 3.4.3.2 Number of Acoustic Lines Per Scan

This parameter usually is measured with a miniature hydrophone in water by traversing across the scan plane much more slowly than the *scan repetition frequency*. For certain systems, direct counting of internal electrical pulses per scan repetition period is simpler.

Authorized Engineering Information 9-17-1981.

Copyright National Electrical Manufacturers Association
Provided by IHS under license with NEMA
No reproduction or networking permitted without license from IHS

Not for Resale

# Section 4

# ELECTRICAL SAFETY REQUIREMENTS

## 4.1 REQUIREMENTS AND TESTS

Diagnostic Ultrasound Equipment shall meet the requirements of "Safe Current Limits for Electromedical Apparatus", AAMI/ANSI 12/78.

NEMA Standard 9-17-1981.

Copyright National Electrical Manufacturers Association
Provided by IHS under license with NEMA
No reproduction or networking permitted without license from IHS

Not for Resale

## Section 5

## ULTRASOUND SAFETY GUIDELINES

**5.1** The use of any active system on a human being involves risk, however low. Although no definitive risk assessment can be made for diagnostic ultrasound, it must be presumed that such risk may exist. Therefore, the use of minimum practical acoustical *intensity* levels and *exposure time* is prudent. Given our imprecise knowledge of any potential hazard to humans based upon current experimental and epidemiological studies, it is premature, and potentially regressive, to recommend quantitative guidelines. Appendix A offers a summary of the current knowledge of biological effects and biophysics related to diagnostic ultrasound equipment so that the medical community and the individual physician can weigh the presumed risk against the known benefits of the procedure.

Authorized Engineering Information 9-17-1981.

**5.2** The following represent general guidelines applicable to all diagnostic ultrasound equipment:

1. Ultrasound equipment should be designed so that the maximum levels of the various *intensities* which the equipment can produce are as low as practicable for the anticipated uses of the equipment.

2. Where such flexibility is consistent with reasonable cost and performance of the system, operators should be able to adjust controls to use the minimum acoustical exposure required to image the desired organs on each patient.

3. As a matter of prudence, users of the equipment should be encouraged by the manufacturer to minimize the *acoustical exposure* to the patient within the limits of obtaining necessary diagnostic information.

Authorized Engineering Information 9-17-1981.

Copyright National Electrical Manufacturers Association
Provided by IHS under license with NEMA
No reproduction or networking permitted without license from IHS

Not for Resale

9009279 0002119 640



# Appendix A

## BIOEFFECTS AND BIOPHYSICS RELATED TO DIAGNOSTIC ULTRASOUND EQUIPMENT

### (APPROVED AS AUTHORIZED ENGINEERING INFORMATION 9-17-1981)

**A1.1** The use of ultrasound in the clinical practice of medicine is generally considered as not involving a hazard to the patient. This appears true, in part, as no obvious problems have emerged, either through clinical observations or experimental studies. The studies, however, necessary to support a reliable assessment of the risks associated with human exposure have, as yet, not been done (O'Brien, *et al.*, 1972; 1978). Two epidemiologists (Scheidt and Lundin, 1977) from the Food and Drug Administration's Bureau of Radiological Health (FDA/BRH) summarized nine studies which dealt with possible effects of ultrasonic energy exposure to the human fetus and concluded that little information exists about such effects. That is, their analysis of these studies produced insufficient information to document whether or not a positive finding was possible. A brief review of the experimental literature by an FDA/BRH research scientist (Stratmeyer, 1977) also concluded that available information was inconclusive. Given that it will be many years before there is a reliable assessment of risk relative to the clinical application of ultrasound, and given that the benefits from such applications are well known, the American Institute of Ultrasound in Medicine (AIUM) and the National Electrical Manufacturers Association (NEMA) have joined efforts to develop an ultrasound safety standard for labeling of acoustic emissions and guidelines to facilitate prudent manufacture and use of ultrasound units.

**A1.2** In this assessment the approach is first to examine the data on ultrasonically induced biological effects in the section entitled "Current Bioeffect Literature." Generally the specific mechanisms responsible for these observations are not fully known. The nature of dose-effect relationships becomes critical when extrapolation from animal observations to presumed effects in humans is attempted. Fundamental to this extrapolation is an understanding of mechanisms. Then a discussion of mechanisms follows. Other sections examine the "Thermal Mechanism" and "Cavitation Mechanism," respectively, as such mechanisms could potentially relate to clinical ultrasound.

### CURRENT BIOEFFECT LITERATURE

**A1.3** A realistic and satisfactory approach in terms of risk assessment examines the risk associated with ultrasound exposure at various levels and, based upon the current bioeffect information, makes informed judgment of specific ultrasonic intensity levels which are meaningful to safety. In order to evaluate the risk, currently available compilations of selected biological effect data are used, rather than re-evaluating the scattered biological effect data base; the limitations imposed by such usage will be discussed.

**A1.4** Two threshold-type curves have been published (Wells, 1974; Ulrich, 1974) resulting from compilations of biological effect data. These authors have attempted to identify a demarcation between a hazardous exposure region and not so hazardous, or safe, exposure region. The two data bases include literature through 1971 (Ulrich, 1974) and 1972 (Wells, 1974) from which each author employed a graphical approach to display the positive and negative bioeffect data.

Copyright National Electrical Manufacturers Association
Provided by IHS under license with NEMA
No reproduction or networking permitted without license from IHS
Not for Resale

Both graphical presentations exhibited intensity as a function of exposure time. For exposure times greater than about 3 minutes, Ulrich (1974) considered a "zone of minimal hazard" to exist below an *intensity* (temporal average and probably a spatial average) of 100 mW/cm² wheras Wells (1974) suggested a "safe" region existed below a *spatial peak—temporal average intensity* of 40 mW/cm². These minimum *intensity* levels included a factor of "safety" from the lowest observed biological effect of around 50 percent.

**A1.5** The application of these two data bases (in fact, much of the same data are used in both compilations) to develop these threshold curves is severely limited because the vast majority of the raw data was not obtained with the view of establishment of thresholds. Basically these curves represented a demarcation between positive bioeffect results (ultrasound produced a biological effect) and negative bioeffect results (ultrasound did not produce a biological effect) and provide a starting point for developing exposure guidelines.

**A1.6** Nyborg (1977) summarized selected data for ultrasonically induced biological effects on mammalian tissue, set them on an intensity versus time graph and developed a line below which no confirmed significant biological effects in mammalian tissues have been demonstrated. This data base was restricted to include only information for which the experimental conditions were well specified. The AIUM's Biological Effects Committee adopted the following statement, based upon those data in 1976 (*J. Clinical Ultrasound,* 5, 2-4, 1977), which was slightly modified and reconfirmed in October, 1978:

STATEMENT OF MAMMALIAN IN VIVO
ULTRASONIC BIOLOGICAL EFFECTS

October 1978

> In the low megahertz frequency range there have been as of October, 1978, no confirmed significant biological effects in mammalian tissues exposed to *intensities** below 100 mW/cm². Furthermore, for ultrasonic *exposure times*** less than 500 seconds and greater than one second, such effects have not been demonstrated even at higher *intensities*, when the product on *intensity** and *exposure time*** is less than 50 joules/ cm².
>
> * *Spatial peak, temporal average* as measured in free field in water.
>
> ** Total time: this includes off-time as well as on-time for a repeated-pulse regime.

The AIUM statement applied to all existing data (of satisfactory quality) on biological changes produced in mammalian tissues by ultrasound in the frequency range from about 0.5 to 10 MHz. The intent by AIUM of the above statement was not to imply specific advice on safe levels for any purpose.

**A1.7** Since the AIUM statement of October 1978, articles have been published which describe ultrasonically induced biological effects from diagnostic equipment; that is, ultrasonic energy from a commercial diagnostic device altered the biological system. One, of course, must be cautious in assessing the significance of single observations of such biological alterations—it could be beneficial or innocuous or it may represent some degree of risk—but one also must be sensitive to the fact that some or all of these alterations are occurring at diagnostic levels. Such alterations include immuno-suppressive effect from *in vivo* exposure of mouse spleenic region (Anderson and Barrett, 1979); altered DNA and growth patterns from *in vitro* exposure of animal cells (Liebeskind *et al.*, 1979a); sister

Copyright National Electrical Manufacturers Association
Provided by IHS under license with NEMA
No reproduction or networking permitted without license from IHS
Not for Resale

9009279 0002121 2T9



chromatid exchanges, a chromosome alteration from *in vitro* exposure of freshly isolated human lymphocytes and cultured lymphoblasts (Liebeskind *et al.*, 1979b); decreased ability of attachment to plastic Petri dish from *in vitro* exposure of cultured human cells (Siegel *et al.*, (1979); and platelet aggregation from *in vitro* exposure of human platelets near microscopic air bubbles (Miller *et al.*, 1979). The AIUM Bioeffects Committee has published (*Reflections,* **5**, 292 and 301, 1979) its reviews of the Liebeskind *et al.*, (1979) article and a preprint of the Anderson and Barrett (1979) article.

## THERMAL MECHANISM

**A1.8** The basic assumption relative to ultrasonic wave propagation loss is that the wave is attenuated exponentially with distance, that is

$$I = I_o\, e^{-2Ax} \qquad (\mathrm{W/cm^2}) \qquad (1)$$

where $A$ is the amplitude attenuation coefficient, $x$ is the distance traveled from the reference $x = 0$, where the intensity is $I_o$, and $I$ is the *intensity* at a distance $x$. In the case when the attenuation is due only to absorption, $A$ becomes the absorption coefficient, and the energy lost from the propagating wave is converted into heat. In tissue, at the site where the ultrasonic *intensity* is $I$ (W/cm$^2$), the rate of heat generation per unit volume per unit time for a plane, progressive wave is (Nyborg, 1975)

$$Q = 2\alpha I \qquad (\mathrm{joules/cm^3 - sec}) \qquad (2)$$

where $\alpha$ (cm$^{-1}$) is the frequency-dependent absorption coefficient. Table A-1 lists the absorption coefficients for a number of biological materials, and $\alpha$, for purposes herein, will be assumed as

$$\alpha = 0.026\, f^{1.1} I \qquad (\mathrm{cm^{-1}}) \qquad (3)$$

where $f$ (MHz) is the ultrasonic frequency. Equation 2 and 3 will allow for an approximate examination of the temperature rise in "typical" parenchymal tissue. When heat is not transported away, the time rate of change of temperature (assuming tissue has a similar heat capacity per unit volume as that of water—4.18 joules/cm$^3$ – °C) is

$$\frac{dT}{dt} = 0.012\, f^{1.1} I \qquad (\mathrm{^\circ C/sec}) \qquad (4)$$

**Table A-1**
**LITERATURE VALUES FOR THE AMPLITUDE ULTRASONIC ABSORPTION AND ATTENUATION COEFFICIENTS IN BIOLOGICAL MATERIALS (THE ULTRASONIC FREQUENCY *f* IS IN THE UNIT OF MHz)**

| Biological Material | Amplitude Absorption Coefficient (cm$^{-1}$) | Amplitude Attenuation Coefficient (cm$^{-1}$) | References |
|---|---|---|---|
| Water (37 °C) | $0.00016\, f^2$ | $0.00016\, f^2$ | (Pinkerton, 1949) |
| Amniotic Fluid | $0.00081\, f^{1.4}$ | $0.00081\, f^{1.4}$ | (Zana and Lang, 1974) |
| Testis | $0.015\, f^{1.11}$ | not determined | (Goss *et al.*, 1979) |
| Brain | $0.024\, f^{1.18}$ | $0.07\, f^{1.14}$ | (Goss *et al.*, 1979) |
| Liver | $0.026\, f^{1.17}$ | $0.08\, f^{1.13}$ | (Goss *et al.*, 1979) |
| Heart | $0.028\, f^{1.04}$ | $0.13\, f^{1.07}$ | (Goss *et al.*, 1979) |
| Kidney | $0.028\, f^{1.02}$ | $0.10\, f^{1.09}$ | (Goss *et al.*, 1979) |
| Tendon | $0.14\, f^{1.17}$ | $0.56\, f^{0.763}$ | (Goss *et al.*, 1979) |

Copyright National Electrical Manufacturers Association
Provided by IHS under license with NEMA
No reproduction or networking permitted without license from IHS
Not for Resale

**A1.9** For clinical, diagnostic pulse-echo instrumentation, the local *intensity I* of equation 4 for a single pulse is considered the spatial peak value averaged over the *pulse duration,* that is the *spatial peak—pulse average intensity.* For such instrumentation, the *spatial peak—pulse average intensity* has been measured (Carson *et al.*, 1978) to be as high as 160 W/cm² as shown in Appendix B. Thus, applying equation 4, assuming an $I_{SPPA}$ of 160 W/cm² and a *pulse duration* is 1 $\mu$s, the increase in temperature is given by

$$\Delta T_{pulse} = 1.9 \times 10^{-6} f^{1.1} \qquad (°C) \qquad (5)$$

which at 1, 5, and 10 MHz are temperature rises of $1.9 \times 10^{-6}$ °C, $11 \times 10^{-6}$ °C, and $24 \times 10^{-6}$ °C, respectively. On the other hand, to obtain a $10^{-3}$ °C temperature rise from a single, 1 $\mu$s pulse, the *spatial peak—pulse average intensity* is given by

$$I_{SPPA} = 83 f^{-1.1} \qquad (kW/cm^2) \qquad (6)$$

which, at frequencies of 1, 3, and 5 MHz, the $I_{SPPA}$ is in excess of 83, 25, and 14 kW/cm², respectively, which are clearly much greater than that employed for clinical diagnostic ultrasonic equipment.

**A1.10** For diagnostic ultrasound, repeated pulses are also considered. To maintain this theoretical approach as simply as possible, and yet to provide insight into the time rate of change of temperature which occurs from exposure to ultrasound, the theory of a heated sphere is applied (Nyborg, 1975). This allows for the loss of heat to be considered the only source for the loss of heat to result from heat diffusion. Other mechanism which remove heat, such as thermal convection and/or fluid motion in the vascular system, are neglected since these depend upon particular tissue areas. Since there are conditions in which thermal convection and/or fluid motion do not contribute appreciably to heat loss, considering only heat diffusion as the source of heat loss can be viewed as a worst case approach.

**A1.11** The spherical model of radius $R$ (cm) has a uniform absorption coefficient described by equation 3 and is surrounded by homogeneous, lossless medium ($\alpha = 0$) with same thermal conductivity coefficient $K$ as that of the sphere. When the ultrasound is initially incident on the sphere, the time rate of change of temperature in the sphere is described by equation 4 and, after sufficient time when equilibrium has been established, the steady state, maximum temperature increase, $\Delta T$, at the center of the sphere is given by

$$\Delta T = \frac{QR^2}{2K} \qquad (°C) \qquad (7)$$

where $Q$ is described by equation 2, $R$ is the radius of the sphere (cm) and $K$ is the thermal conductivity coefficient (which is equal to 0.0060 W/cm– °C for water and is assumed nearly the same for tissue), yielding

$$\Delta T = 4.33 f^{1.1} R^2 I \qquad (°C) \qquad (8)$$

The time required for $\Delta T$ to reach about 80 percent of its equilibrium value is of the order of

$$\tau = \frac{R^2}{D_{th}} \qquad (sec) \qquad (9)$$

Copyright National Electrical Manufacturers Association
Provided by IHS under license with NEMA
No reproduction or networking permitted without license from IHS
Not for Resale

where $D_{th}$ is the thermal diffusivity (which is equal to 0.00144 cm²/sec for water and is assumed nearly the same for tissue). Therefore, about $4\tau$ of time is required to reach the steady-state equilibrium temperature.

**A1.12** Equations 8 and 9 are now applied to two general cases, one an ultrasonic field generated by a plane, piston source, and the other focused field, both described schematically in Figures A-1 and A-2, respectively. In these two cases, the intensity averaged over the sphere cross-sectional area is employed since the sphere cross-sectional area and the *beam cross-sectional area* are considered to be the same, that is, the *spatial average, temporal average intensity.*

**Figure A-1**
**SCHEMATIC DESCRIPTION OF THE ULTRASONIC FULL GENERATED BY A PLANE, PISTON SOURCE *T* OF DIAMETER *D* IN WHICH THE HEATED SPHERE OF RADIUS *R* IS POSITIONED IN THE NEW FIELD (NOTE THAT $D=2R$)**

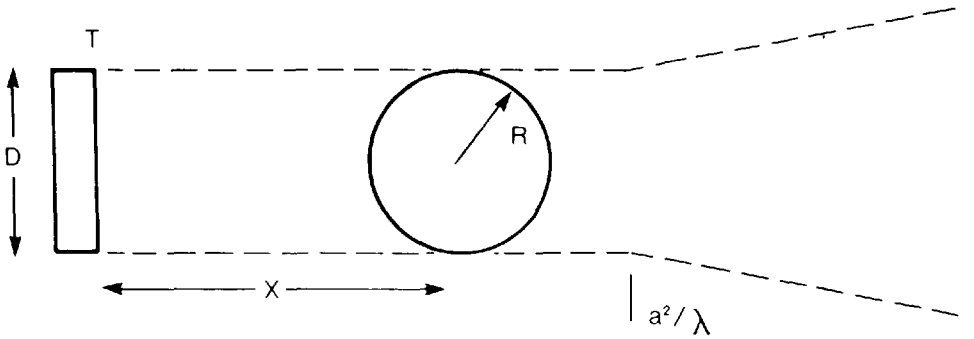


**Figure A-2**
**SCHEMATIC DESCRIPTION OF THE ULTRASONIC FIELD GENERATED BY A FOCUSED TRANSDUCER *T* OF DIAMETER *D* IN WHICH THE HEATED SPHERE IS POSITIONED AT THE FOCUS AND HAS A RADIUS *R* WHICH IS EQUAL TO THE RADIUS OF THE *BEAM CROSS-SECTIONAL AREA* AT THAT POSITION IN THE FIELD**

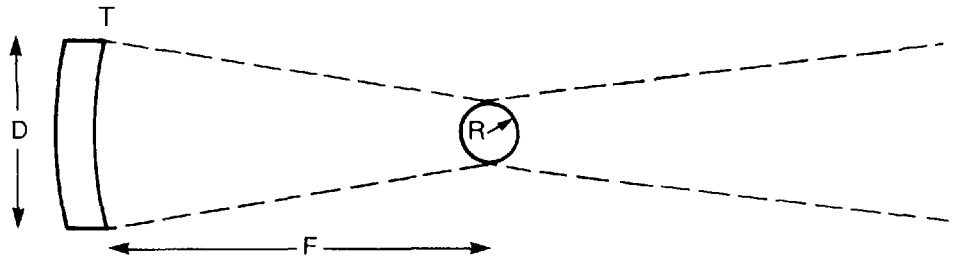


**A1.13** For a plane piston source of diameter $D$, the near field is assumed to be uniform and cylindrically collimated with a beam cross-sectional diameter $D$ (see Figure A-1). Equations 8 and 9 can be applied by assuming $D=2R$ in which $I$ is the local (in tissue) *spatial average, temporal average intensity.* A temperature rise of 1 °C is considered because (a) it normalizes the results to a degree Celsius basis and (b) it is approximate range of diurnal temperature fluctuations in humans (Mettelle, 1951). Equations 8 and 9 become

Copyright National Electrical Manufacturers Association
Provided by IHS under license with NEMA
No reproduction or networking permitted without license from IHS

Not for Resale

$$I_{SATA} = \frac{0.92}{f^{1.1} D^2} \qquad (\text{W/cm}^2) \qquad (10)$$

and

$$\tau = 174\, D^2 \qquad (\text{sec}). \qquad (11)$$

Equation 10 gives the *in situ* $I_{SATA}$ required for a 1 °C equilibrium temperature rise in the center of the sphere. In practice, the *intensity* measurements are made in a low-loss fluid medium such as water. Thus, to account for the attenuation of ultrasound between the skin surface and the "sphere," a typical tissue attenuation coefficient (Table A-1) of Equation 1 is assumed to be

$$A = 0.1\, f^{1.1} \qquad (\text{cm}^{-1}). \qquad (12)$$

Further, if water is assumed lossless, then the *spatial average—temperal average intensity* (from equation 10) as determined in the free-field in water at a distance $x$ from the transducer surface becomes

$$I_{SATA}\Big|_{\substack{\text{free-field}\\ \text{in water}}} = \frac{0.92}{f^{1.1} D^2}\; e^{0.2\, f^{1.1}_{x}} \qquad (\text{W/cm}^2) \qquad (13)$$

where $x$ (cm) is the distance the sound travels in tissue to reach the sphere. An examination of the behavior of equation 13, as shown in Figure A-3 for $D$ = 1.9 cm, indicates that there is a minimum in the *intensity* required to produce a 1 °C temperature rise in the center of sphere as a function of frequency. An expression for the minimum *intensity* is obtained by differentiating equation 13 with respect to $f$ and equating the result to zero yielding

$$x = 5 f^{-1.1} \qquad (\text{cm}). \qquad (14)$$

This indicates that in Figure A-3, the ultrasonic frequency at which the three minimum values of $I_{SATA}$ occurred for $x = 1$, 1.7, and 2 cm, respectively, are at 4.3, 2.7, and 2.3 MHz. Substituting this information, into equation 13, the minimum values of $I_{SATA}$, respectively, are 0.14, 0.23, and 0.28 W/cm².

Thus, for worst case analysis it is only necessary to solve for the minimum *intensity*, as determined in (lossless) water, which is required to raise tissue temperature 1 °C; combining equation 14 into equation 13 yields

$$I_{SATA}\Big|_{\substack{\text{free-field}\\ \text{in water, minimum}}} = \frac{2.5}{f^{1.1} D^2} \qquad (\text{W/cm}^2). \qquad (15)$$

Table A-2 lists the values of $I_{SATA}$ calculated from equation 15 and $\tau$ calculated from equation 11 at ultrasonic frequencies of 1, 3, 5, and 10 MHz for transducer diameters of 0.6, 1.2, 1.9, and 2.5 cm. Accordingly, as the frequency increases, the minimum value of $I_{SATA}$ necessary to produce a 1 °C temperature rise decreases. Also decreasing is the depth into the tissue where the temperature rise is 1 °C; at greater or lesser depths, the temperature rise is less than 1 °C.

Copyright National Electrical Manufacturers Association
Provided by IHS under license with NEMA
No reproduction or networking permitted without license from IHS
Not for Resale

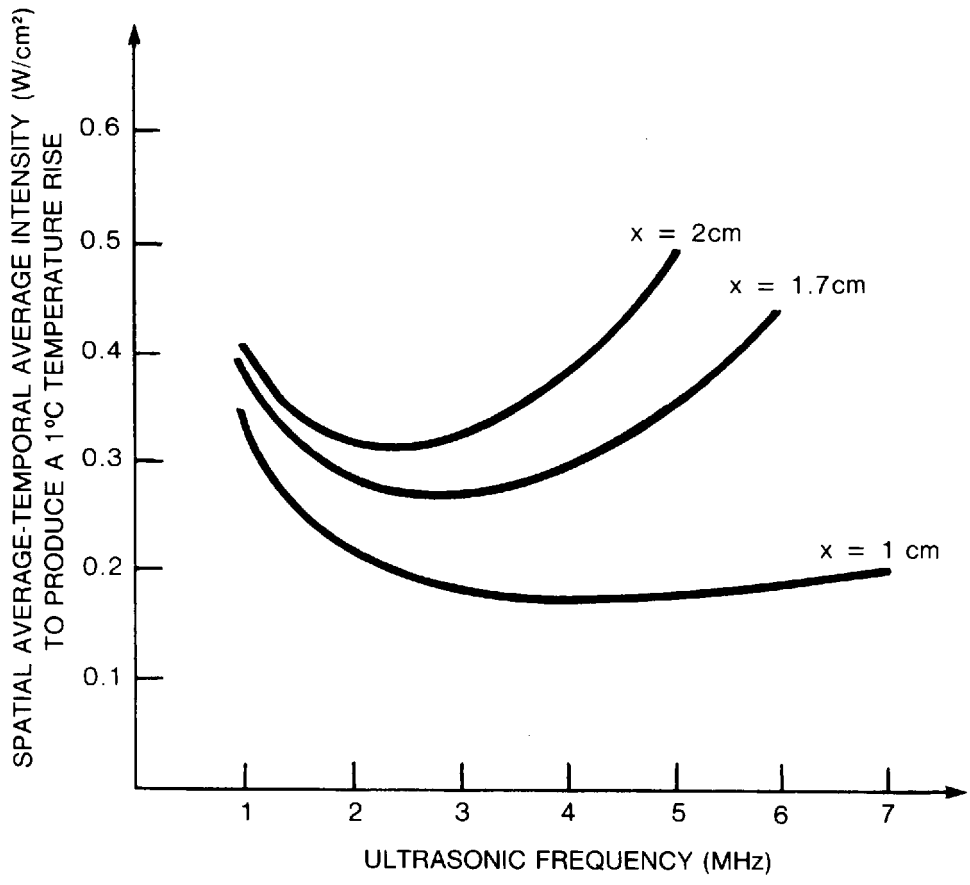


**Figure A-3**

**GRAPHICAL REPRESENTATION OF EQUATION 13 FOR A PLANE PISTON SOURCE (D = 1.9 cm)**

Copyright National Electrical Manufacturers Association
Provided by IHS under license with NEMA
No reproduction or networking permitted without license from IHS

Not for Resale

**Table A-2**
**MINIMUM VALUES OF $I_{SATA}$ CALCULATED FROM EQUATION 15 AND VALUES OF $\tau$ CALCULATED FROM EQUATION 11**
(Note that the Distance $x$ is calculated from Equation 14)

| | | $I_{SATA}$ (W/cm²) – Equation 15 | | | |
|---|---|---|---|---|---|
| D(cm) | (min) | 1 MHz | 3 MHz | 5 MHz | 10 MHz |
| 0.6 | 1.1 | 6.9 | 2.1 | 1.2 | 0.55 |
| 1.2 | 4.2 | 1.7 | 0.52 | 0.30 | 0.14 |
| 1.9 | 11.0 | 0.69 | 0.21 | 0.12 | 0.055 |
| 2.5 | 18.0 | 0.40 | 0.12 | 0.068 | 0.032 |
| | $x$ = | 5 cm | 1.5 cm | 0.85 cm | 0.40 cm |

**A1.14** In summary, for a plane piston source as described above, it appears unlikely that the temperature rise at the range of the fetus, for example, would exceed 1 °C providing the *spatial average, temporal average intensity,* as determined in water, did not exceed 100 mW/cm² in the low megahertz frequency range.

For a focused transducer of diameter $D$ and focal length $F$, the beam cross-sectional diameter at the focus is approximately (O'Neil, 1949; Fry and Dunn, 1962)

$$D_F = \frac{\lambda F}{D} \quad \text{(cm)}. \tag{16}$$

Assuming the "sphere" is at the focus, this is equivalent to the previous case with $I_{SATA}$ required to raise the temperature 1 °C if $D$ in equations 11 and 15 is considered to be the spot at the focus with a diameter $D_F$. This leads to the notable results that greater minimum *intensity* values are needed to generate a 1 °C temperature rise with focused transducers but the time required to reach the equilibrium temperature is decreased. Mathematically, this is described from equations 15 and 11 by observing that $I_{SATA}$ is inversely proportional to $D_F^2$. It should be reiterated that these are worst case assumptions. Blood flow, convection, and other heat dissipative mechanisms may exist in certain regions of the body which would result in an increase in the *intensities* required to elevate the temperature of a volume of tissue.

## CAVITATION MECHANISM

**A1.15** Here the term "cavitation" is used in a broad sense, and refers to activity occurring in a sonicated medium (liquid, or liquidlike solid) which is associated with bubbles or pockets containing gas or vapor. "Transient cavitation" connotes a relatively violent activity in which "hot spots" of high temperature and pressure occur in short (microsecond) bursts at points in the sonicated medium. These bursts may be accompanied by localized shock waves and/or by the generation of highly reactive chemical species. In contrast to the dramatic phenomena of transient cavitation is a more subdued range of activities associated with vibrating gaseous bodies, called "stable cavitation". Both transient and stable forms of cavitation can be significant in affecting biological macromolecules, cells and tissues. Cavitation has many aspects, and it has proved very difficult to fully characterize or control in typical experiments. The cavitation field is usually complex and not restricted to either the transient or stable type.

Copyright National Electrical Manufacturers Association
Provided by IHS under license with NEMA
No reproduction or networking permitted without license from IHS
Not for Resale

9009279 0002127 717



**A1.16** Whether cavitation occurs or not, and its nature, depends on many factors, including: The pressure amplitude of the sound field; the type of sound field (focused or not; standing or traveling wave; pulsed or continuous); the nature and state of the medium and its boundaries. Of special significance is the "state of nucleation", that is, the extent to which the medium, or the surfaces of objects immersed in it, or container walls, contain gaseous or vaporous phase distributed in a way which promotes activity in a sound field. The term "cavitation nucleus" is often used to refer to a small body of gas or vapor which becomes the site of cavitation in a sound field of sufficiently high pressure amplitude.

**A1.17** In aerated aqueous liquids continuous ultrasound typically generates cavitation activity whenever the pressure amplitude ($p_o$) is of the order of a few atmospheres or greater, corresponding to a (traveling plane wave) *intensity I* of the order of 1 W/cm$^2$ or more. When gas is removed from the liquid and its container, the amplitude $p_o$ required for cavitation is much greater. However, even with very pure water under the most exacting conditions it has not been possible to apply a pressure amplitude $p_o$ greater than a "threshold value" of about 300 atm without cavitation; this corresponds to an *intensity I* of 30 kW/cm$^2$ and would probably be an upper limit to the threshold for ultrasound at frequencies up to several megahertz applied continuously to a quantity of aqueous medium contained in any typical laboratory vessel. The medium would undoubtedly contain, at least, one nucleus capable of cavitation under these conditions.

**A1.18** It is possible, though not yet confirmed experimentally, that the cavitation threshold is higher if the frequency is above 5 MHz, or if the ultrasound is applied in very short pulses (with duration of the order of 1 $\mu$s), or if the medium is relatively viscous or gel-like. Also, it was shown by Apfel (1971) using special liquids, that if the quantity of medium in question is in the form of a small droplet, and is appropriately isolated, the cavitation level is usually high because there is only a small probability of a nucleus existing in the droplet. A theoretical upper limit to the threshold pressure amplitude $p_o$ for homogeneous liquid (that is, a liquid free of the kind of nuclei we have been considering) has been estimated by some investigators as 4000 atm for water (Blake, 1949) and (as an example of a nonpolar liquid) 260 atm for carbon tetrachloride (Flynn, 1964).

Most of the information on which the above discussion is based comes from experiments with water, aqueous solutions or aqueous suspensions whose specifications are carefully given except in respect to the state of nucleation. In these experiments nuclei are not known as to number, location or size and their occurrence is essentially accidental. It is probably largely because of differences in nucleation that observed *intensity* thresholds in aqueous media vary over a range of more than four orders of magnitude.

**A1.19** The range is even greater, extending to low *intensities*, when experiments are included in which the medium is deliberately "seeded" with gaseous nuclei of suitable size. Indeed physical theory, combined with biophysical data, suggests that when the state of nucleation is optimized alteration of biological cells might occur at levels which are very low, corresponding to pressure amplitudes of the order of 0.1 atm (or less) and *intensities* of the order of 1 mW/cm$^2$ (or less). The mechanism invoked is that of mechanical stresses which occur in the vicinity of the gaseous nuclei, and especially those associated with acoustic microstreaming (Nyborg, 1977).

**A1.20** In biological media the highest *intensities* which have been supplied are probably those employed in producing brain lesions with focused ultrasound.

Copyright National Electrical Manufacturers Association
Provided by IHS under license with NEMA
No reproduction or networking permitted without license from IHS
Not for Resale

Using single pulses of 40 ms duration, Fry, *et al.* (1970) have shown that tissues of the mammalian central nervous system are severely disrupted at spatial peak *intensities* of about 2 kW/cm$^2$; they ascribe the disruption to cavitation. For shorter pulses, of duration 100 $\mu$s, the corresponding *intensity* required for the disruption is 20 kW/cm$^2$, approaching the highest experimental threshold which has been reported for cavitation in water.

**A1.21** The lowest *intensities* at which bioeffects of cavitation have been reported in animal tissues are in a range characteristic of therapeutic ultrasound. For example, Lehmann and Herrick (1953) found evidence that irradiation of a mouse with 1.00 MHz continuous ultrasound at *spatial average intensities* of 2 W/cm$^2$ for two minutes produced cavitation, with associated damage, in peritoneal tissue.

**A1.22** Detection of cavitation in living animals is made difficult by the optical opacity of most animal tissue. In particular, it is not known whether live animal tissue contains gaseous nuclei which would be effective sites of activity in an ultrasonic field at megahertz frequencies and low *intensities.* While ultrasonic methods of detecting nuclei show promise, none with sufficient sensitivity are available at this time.

**A1.23** Insight on possibilities which exist when nuclei are present is obtained from experiments on plant tissues and on cell suspensions. In plant stems, roots, leaves and other tissues, intercellular channels often contain gas. It has been demonstrated that under ultrasound these channels serve as gaseous "nuclei" in that they are sites of activity with biological consequences [Nyborg, *et al.* (1974); Miller, D. L., *et al.* (1979); Carstensen, *et al.* (1979); Martin, *et al.* (1978)]. Observations including inspection through a microscope during ultrasonation show that because of intercellular gas, intracellular eddying occurs at intensities as low as 30 mW/cm$^2$ and cell destruction results at *intensities* as low as 75 mW/cm$^2$.

**A1.24** In many experiments suspensions of cells are ultrasonated in laboratory arrangements and changes in the cells are observed at spatial peak *intensities* of the order of 1 W/cm$^2$ or higher (Reid and Sikov, 1972). It is reasonable to suspect cavitation as the mechanism. However, in most experiments the state of nucleation for the medium was unknown and tests were not made for the presence of cavitation.

**A 1.25** In a few recent experiments cell suspensions were isonated with nucleation deliberately provided by means of membranes with microscopic gas-filled pores. It was found that when gaseous nuclei of appropriate size were present, cellular changes were produced by ultrasound at a frequency of 1 MHz and at much lower *intensities* than if the nuclei were absent. For example, platelets were caused to aggregate at spatial peak *intensities* as low as 30 mW/cm$^2$. (Miller, D.L., *et al.* 1979).

**A1.26** The finding that when suitable nucleation exists ultrasound causes biological effects at low *intensities* is in general agreement with the expectations previously mentioned. In earlier investigations at a low ultrasonic frequency (20 kHz) Rooney (1970) showed that even a single resonant air bubble promotes lysis of canine red cells suspended in saline at a pressure amplitude of 0.03 atm corresponding to a (traveling plane wave) *intensity* of 0.3 mW/cm$^2$. Assuming the lysis was caused by viscous stresses associated with acoustic microstreaming, the required stress for lysis was computed as 4300 dyne/cm$^2$. There are consider-

Copyright National Electrical Manufacturers Association
Provided by IHS under license with NEMA
No reproduction or networking permitted without license from IHS
Not for Resale

9009279 0002129 59T



able uncertainties involved in proceeding from results at 20 kHz to draw specific quantitative inferences about possibilities at megahertz frequencies. However, these results together with physical theory and the results obtained so far at megahertz frequencies point definitely to an important role for gaseous nucleation. Unfortunately, we have little knowledge of the state of nucleation in animal systems and this fact contributes significantly to uncertainties in recommending ranges of *intensities* to be used in medical ultrasound.

## REFERENCES

Anderson, D.W. and J.T. Barrett (1979), Ultrasound: A New Immunosuppresant, Clinical Immunology Immunopathology, **14**, 18-29.

Apfel, R.E. (1971), A Novel Technique for Measuring the Strength of Liquids, J. Acoust. Soc. Am. **49**, 145-155.

Blake, F.G., Jr. (1949), The Tensile Strength of Liquids: A Review of the Literature, Office of Naval Research, Report No. NR-014-903.

Carson, P.L., P.R. Fischella and T.V. Oughton (1977). Ultrasonic Power and Intensity Produced by Diagnostic Ultrasound Equipment. Ultrasound Med. Biology, **3**, 341-350.

Carstensen, E.L., S.Z. Child, W.K. Law, D.R. Horowitz and M.W. Miller, Cavitation as a Mechanism for the Biological Effects of Ultrasound on Plant Roots, J. Acoust. Soc. Am. **66**, 1285-1291 (1979).

Coakley, W.T. and W.L. Nyborg, (1978). Cavitation; Dynamics of Gas Bubbles; applications. In *Ultrasound: Its Application in Medicine and Biology*, F.J. Fry Ed. (Elsevier Publishing Co., Amsterdam, 1978).

Crowell, J.A., B.K. Kusserow and W.L. Nyborg, (1977). Ultrasound Med. Biol. **3**, 185-190.

Etienne, J., L. Filipczynski, A. Firek *et al.*, (1976). Intensity Determinaltion of Ultrasonic Focused Beams Used in Ultrasonography in the Case of Gravid Uterus, Ultrasound Med. Biol., **2**, 119.

Flyyn, H.G. (1964), Physics of Acoustic Cavitation in Liquids, in *Physical Acoustics*, W.P. Mason, Ed., Vol. 1B, pp 58-172 (Academic Press).

Fry, W.J. and F. Dunn (1962). Ultrasound: Analysis and Experimental Methods in Biological Research. Phys. Tech. Biological Research, **4**, 261-394.

Fry, F.J., G. Kossoff, R.C. Eggleton and F. Dunn (1970). Threshold Ultrasonic Dosage for Structural Changes in the Mammalian Brain. J. Acoustic. Soc. Amer., **48**, 1413-1417.

Goss, S.A., L.A. Frizzell and F. Dunn (1979). Ultrasonic Absorption and Attenuation in Mammalian Tissues. Ultrasound Med. Bio., **5**, 181-186.

Hall, A.J. (1973). Ultrasonic Dosimetry in Obstetrics. Paper presented at the 2nd World Congress on Ultrasonics in Medicine, Rotterdam, June 4-8.

Kinsler, L.E. and A.R. Frey (1962). *Fundamentals of Acoustics*, Second Edition, Wiley, New York, NY.

Lehmannm, J.F. and J.F. Herrick (1953). Biologic Reactions to Cavitation, A Consideration for Ultrasonic Therapy, Arch. Phys. Med. **34**, 86-98.

Liebeskind, D., R. Bases, F. Elequin, S. Newbort, R. Leifer, R. Goldberg and M. Koenigsberg (1979a). Diagnostic Ultrasound: Effects on the DNA and Growth Patterns of Animal Cells. Radiology, **131**, 177-184.

Liebeskind, D., R. Bases, F. Mendez, F. Elequin and M. Koenigsberg (1979b). Sister Chromatid Exchanges in Human Lymphocytes after Exposure to Diagnostic Ultrasound. Science, **205**, 1273-1275.

Martin, C.J., H.G. Gemmell and D.J. Watmough (1978). A Study of Streaming in Plant Tissue Induced by a Doppler Fetal Heart Detector. Ultrasound Med. Biol., **4**, 131-138.

Copyright National Electrical Manufacturers Association
Provided by IHS under license with NEMA
No reproduction or networking permitted without license from IHS
Not for Resale

9009279 0002130 201



Mellett, H.C., B.K. Hutt, S.I. Askowitz and S. Horvath (1951). J. Appl. Physiol., **3**, pp. 665-675.

Miller, D.L. (1979), Cell Death Thresholds in *Elodea* for 0.45 to 10 MHz Ultrasound, Ultrasound Med. Biol. **5**, 351-357.

Miller, D.L., W.L. Nyborg and C.C. Whitcomb (1979). Platelet Aggregation Induced by Ultrasound Under Specialized Conditions *in vitro*. Science, **205**, 505-507.

Nyborg, W.L., D.L. Miller and A. Gershoy (1974), Physical Consequences of Ultrasound in Plant Tissues and other Bio-Systems, in *Proceedings of the Seventh Rochester International Conference on Environmental Toxicity* (Plenum, New York).

Reid, J.R. and M.R. Sikov, Eds. (1972) *Interaction of Ultrasound and Biological Tissues,* DHEW Publication (FDA) 73-8008 (Bureau of Radiological Health, Rockville, MD 20852).

Rooney, J. (1970). Hemolysis Near an Ultrasonically Pulsating Gas Bubble, Science **169**, 869-871.

Wildavsky, A. (1979). No Risk Is the Highest Risk of All. American Scientist, **67**, 32-37.

Williams, A.R., D.E. Hughes, and W.L. Nyborg, (1970). Hemolysis Near a Trasversely Oscillating Wire. Science **169**, 871-873.

Williams, A.R., (1972). Disorganization and Disruption of Mammalian and Amoeloid Cells by Acoustic Microstreaming. J. Acoust. Soc. Am. **52**, 688-693.

Williams, A.R., (1977). Intravascular Mural Thrombi Produced by Acoustic Microstreaming. Ultrasound Med. Biol. **3**, 191-203.

Zana, R. and J. Lang (1974). Interaction of Ultrasound and Amniotic Liquid Ultrasound Med. Biol., **1**, 253-258.

Copyright National Electrical Manufacturers Association
Provided by IHS under license with NEMA
No reproduction or networking permitted without license from IHS
Not for Resale

9009279 0002131 148



# Appendix B
# SURVEY OF EXPOSURE LEVELS FROM CURRENT DIAGNOSTIC ULTRASOUND SYSTEMS

**(APPROVED AS AUTHORIZED ENGINEERING INFORMATION 9-17-1981.)**

**B1.1** Data available to this Task Group on the ranges of *intensities* produced by current ultrasound systems is provided in Table B-1. This list is presented so that users and manufacturers might be aware of the range of *intensities* produced by different types of clinical diagnostic equipment. The list should also facilitate comparison of instrument *intensity* levels with estimates of *intensity* levels for producing biological effects (Appendix A).

**B1.2** *Intensity* data were obtained from published values in the literature (Carson, 1978; 1980; Etienne, 1976; Hill, 1971; Nyborg, 1979; O'Brien, 1978; Rooney, 1973; Stewart, 1979) and from unpublished data made available to the Task Group. It must be emphasized that the values presented in some cases represent measurements from a very limited number of instruments. In addition, the measurement methods and calculation techniques may have varied from those prescribed in this standard.

**B1.3** The data shown cannot be construed as "typical" since they are not representative of statistical compilations of any sort. The Table does suggest, however, a wide spread in the *intensity* values for different types of equipment and/or operating modes, just as wide data spreads have also been noted in compilations from presumably similar pieces of equipment. Possible reasons for this spread might include the following:

1. Large diversities in the intended applications of different instruments.
2. Variation in imaging performance of instruments.
3. Variations in ultrasonic frequency (none of the data presented here are classified according to *center frequency, fractional bandwidth,* etc.)
4. Variations in measurement techniques employed in calculating *intensity* values.
5. Variations in accuracy of measurement equipment.

**B1.4** It is possible that in the future some ultrasound equipment and/or operating modes may exceed these ranges in order to obtain certain diagnostic capabilities. Manufacturers of equipment should nevertheless follow the guidelines set down in this standard, i.e., assuring that the maximum *intensity* levels the equipment can produce are as low as practicable for an attended application.

Copyright National Electrical Manufacturers Association
Provided by IHS under license with NEMA
No reproduction or networking permitted without license from IHS
Not for Resale

## Table B-1
## INTENSITY RANGES PRODUCED BY CURRENT ULTRASOUND SYSTEMS

| Type of Equipment | Spatial Average—Temporal Average Intensity on the Radiating Surface | Spatial Peak—Temporal Average Intensity | Spatial Peak—Pulse Average Intensity |
|---|---|---|---|
| Static Pulse Echo Scanners and M Mode Equipment | 0.4 – 20 $mW/cm^2$ | 10 – 200 $mW/cm^2$ | 0.5 – 280 $W/cm^2$ |
| Automatic Sector Scanners (Phased Arrays and Wobblers) | 2.7 – 60 $mW/cm^2$ | 45 – 200 $mW/cm^2$ ** | 25 – 100 $W/cm^2$ |
| Sequenced Linear Arrays | 0.06 – 10 $mW/cm^2$ | 0.1 – 12 $mW/cm^2$ | 25 – 100 $W/cm^2$ |
| Pulsed Doppler, Primarily for Cardiac Work | 3 – 32 $mW/cm^2$ | 50 – 290 $mW/cm^2$ | 3 – 14 $W/cm^2$ |
| Doppler Instruments, Primarily for Obstetric Applications | 3 – 25 $mW/cm^2$ | Spatial Peak Intensity 9 – 75 $mW/cm^2$ | |
| Continuous Wave Doppler, Primarily for Peripheral Vascular | 38 – 840 $mW/cm^2$ | 110 – 2500 $mW/cm^2$ * | |

* Estimate based on the *spatial average—temporal average.*

** This value was measured with the scanning mechanism arrested for M mode and at the maximum system *pulse repetition rate.*

## REFERENCES

Carson, P.L., Fischella, P.R., Oughton, T.V. (1977). Ultrasonic Power and Intensity Produced by Diagnostic Ultrasound Equipment. Ultrasound Med. Biology, **3**, 341-350.

Carson, P.L. (1980). "Diagnostic Ultrasound Emissions and Their Measurements" in Medical Physics in CT and Ultrasound: Tissue Imaging and Characterization, ed. by G. Fullerton and J. Zagzebski, American Institute of Physics, New York.

Etienne, J., Filipczynski, L., Firek, A., *et al.* (1976). Intensity Determination of Ultrasonic Focused Beams Used in Ultrasonography in the Case of the Gravid Uterus. Ultrasound Med. Biology, **2**, 119-122.

Hill, C.R. (1971). Acoustic Intensity Measurements on Ultrasonic Diagnostic Devices. Ultrasonographic Media (edited by Bock and Orsoinig) Vol. 2, 21-27, Vienna Academy of Medicine, Vienna.

Nyborg, W.L., (Moderator), Buxbaum C., Carson, P., *et al.*, Should There be Upper Limits to Intensities for Ultrasound Equipment? A Panel Discussion. Reflections, **4**: 293-300, 1978.

O'Brien, W.D., Jr. (1978). Safety of Ultrasound in *Clinical Handbook of Ultrasound* edited by M. de Vlieger, J. Holmes, E. Kazner *et al.* 99-108, Wiley, New York.

O'Brien, W.D., Jr. (1978). Ultrasonic Dosimetry in Ultrasound: Its Applications in Medicine and Biology, F. Fry (Editor), Elsevier Scientific Publishing Co., New York.

Rooney, J.A. (1973). Determination of Acoustic Power Outputs in the Microwatt-Milliwatt Range. Ultrasound Med. Biology, **1**, 13-16.

Stewart, H.F. (1979). Diagnostic Ultrasound Output Levels and Quality Assurance Measurement Techniques. Proceedings of the Eleventh Annual National Conference on Radiation Control, May 6-9, 1979.

Copyright National Electrical Manufacturers Association
Provided by IHS under license with NEMA
No reproduction or networking permitted without license from IHS
Not for Resale

9009279 0002133 T10



# Appendix C
# RATIONALE FOR ACOUSTIC LABELING REQUIREMENTS, ULTRASOUND SAFETY GUIDELINES, AND DEFINITIONS

**(APPROVED AS AUTHORIZED ENGINEERING INFORMATION 9-17-1981.)**

## LABELING REQUIREMENTS

**C1.1** Research has shown that ultrasound under certain conditions can produce changes in living systems. Instrument labeling requirements are prescribed in this standards publication because we accept the philosophy that there is a possible risk from diagnostic ultrasound exposures. Specific labeling requirements were selected to include those acoustical exposure variables whose magnitudes are known or believed to be in proportion to actual damage or to risk of damage to biological tissues as a result of ultrasonic irradiation and which can be accurately measured. These variables include the *ultrasonic power*; the *spatial peak—temporal average intensity*; and the *spatial peak—pulse average intensity.* Additional labels provide critical information regarding the spatial properties of the acoustical *intensity*; these include the location of the *spatial peak—temporal average intensity* and the maximum *spatial average—temporal average intensity.*

**C1.2** Labeling for automatic scanning instruments has been carefully considered and major changes were incorporated into the standard following the comment period. The great diversity of automatic scanning instruments makes it unlikely that all cases fit directly into the labeling requirements. In this case, the manufacturer should attempt to understand the rationale for labeling and the exposure parameters thoroughly before making any changes. The rationale for these changes should be included in the labeling documentation provided.

**C1.3** Labeling of the *spatial peak—temporal peak* intensity was considered extensively by the Task Group. This quantity may be important because of its potential relation to specific biological effects. However, the *spatial peak—temporal peak intensity* is not included in the labeling requirements because of uncertainties in measuring this quantity using available state of the art measuring apparatus. At the highest peak *intensities* encountered in diagnostic ultrasound fields, measurement of the *spatial peak—temporal peak intensity* is affected strongly by presence of the hydrophone and water generated nonlinearities. It is precisely at these highest peak *intensities* that knowledge of *spatial peak—temporal peak intensity* would be of most value if it could be measured accurately. In all references known to this Task Group, in which errors have been estimated for measurements of *spatial peak—temporal peak intensity* at the highest peak *intensity* encountered in diagnostic systems, the errors quoted have been unacceptably large for meaningful labeling.

**C1.4** The *spatial peak—pulse average intensity* does provide label information uniquely related to the *intensity* levels produced by pulsed diagnostic instruments. As pointed out in Appendix A, in many bioeffects experiments the *spatial peak—pulse average intensity* is measured rather than the *spatial peak—temporal peak intensity.* The definitions and methodology prescribed in this standard enable the *spatial peak—pulse average intensity* to be determined with adequate precision using existing equipment.

**C1.5** At the present time, it is not always known how labeled *intensity* quantities relate to *intensities* in the body at the site of concern for biological effects. How-

Copyright National Electrical Manufacturers Association
Provided by IHS under license with NEMA
No reproduction or networking permitted without license from IHS
Not for Resale

ever, for a given medium, the distribution of acoustical energy would be related to the *entrance beam dimensions,* the *center frequency* and *fractional bandwidth,* the *focal length, focal area* and *depth of focus,* and, for automatic scanning systems, the scanning speed, scanning geometry, etc. Therefore these quantities are also called for in labeling requirements.

**C1.6** Labeling requirements include a calibration for the power control on instruments where such a control is provided. This label serves to alert the user directly of variations in *acoustical exposure* resulting from changes in this control. Provision of this information is consistent with the general ultrasound safety guidelines adopted in this standard, which include the premise that users of ultrasound instruments should be encouraged to minimize *acoustical exposures* to patients whenever practical. Bringing about an awareness on the part of the user of the effects of various control settings on patient exposure can be one step in encouraging use of minimal exposures.

**C1.7** The concept of "*absolute maximum*" was defined and adopted to provide the most meaningful level of *acoustical exposure* parameters for this safety standard. One of the purposes of the labeling information is to make users of an instrument aware of potentially high *intensity* operating modes, high *intensities* resulting from specific control settings, and excessive acoustical *intensities* produced by certain instruments that might be used for applications for which they were not designed. The "*absolute maximum*" provides label information which is applicable to any instrument of a given generic type produced by the manufacturer. In addition, "*absolute maximum*" as defined in this standard presents a "worst case" situation, taking into account any variations in acoustical output caused by changing the control settings on an instrument, variations among the instruments of a given generic type produced by a manufacturer and errors in the measurement and prescription methods. Acceptable deviations of a given instrument's acoustical output from the values labeled, which may result from any combination of the three sources listed, would be in the direction of safety.

## ULTRASOUND SAFETY GUIDELINES

**C1.8** A number of approaches to assure patient safety from ultrasonic exposure have been thoroughly considered in the formulation of the Ultrasound Safety Guidelines in Section 5. Given the imprecise knowledge of any potential hazard to humans based upon current experimental and epidemiological studies it is premature, and potentially regressive, to recommend quantitative guidelines. The concept of a graduated labeling requirement was also extensively examined and it was not adopted for the following reasons:

1. Upper tier (most stringent labeling for the highest *intensity* level)

   In a relatively new technology like diagnostic ultrasound, there is a need to assure that innovation is not discouraged or impeded in any way, while at the same time protecting the patient from any unexpected hazards that may exist. It would be counter-productive to establish upper-tier labeling levels of ultrasound energy since energies below this level might be considered completely safe, while energies above this level would be considered hazardous. Future research may prove lower *intensities* hazardous or larger *intensities* safe. Should such a "safe" level become accepted without regard to the particular circumstances of equipment and anatomy there would be no additional incentive to keep the power as low as practical and consistent with good image quality.

Copyright National Electrical Manufacturers Association
Provided by IHS under license with NEMA
No reproduction or networking permitted without license from IHS
Not for Resale

2. Lower-tier (simple or no labeling for low *intensity* levels)

   Because of the lack of knowledge regarding any biological effects of ultrasonic energy in humans at very low levels, levels at which measurements become more difficult, it becomes impossible to select with any degree of confidence the proper levels below which lesser amounts of labeling information would be required. Therefore, in an effort to provide complete information to the user, the standard does not establish a lower-tier labeling level.

The present labeling requirement in combination with the competitive market pressures will favor those instruments with the lowest output levels consistent with good image quality.

## DEFINITIONS

**C1.9** To the extent possible, the definitions in this standard are consistent with existing practices and standards. In particular, they are consistent with AIUM Recommended Nomenclature and other standards of NEMA, AIUM, the International Electro-technical Commission, the Acoustical Society of America, the American National Standards Institute, and the United States Food and Drug Administration. The terms of primary concern are those dealing with transmitted acoustic fields. These transmitted field quantities are defined for the maximum possible equivalence with corresponding pulse-echo response characteristics.

**C1.10** The threshold fractional pressure for defining the *beam cross-sectional area* differs from that of the Performance Standard for Ultrasonic Therapy Products of the Department of Health, Education and Welfare, Food and Drug Administration (21 CFR 1050). This is because the *beam cross-sectional area* of the ultrasonic therapy standard is designed primarily for measurement at the radiating surface of the *transducer assembly.* In the near-to-*far field* transition of a flat transducer or *depth of focus* of a focused transducer, that definition would yield a meaninglessly high *beam cross-sectional area* and correspondingly low *spatial average intensity.*

**C1.11** The definition of *beam cross-sectional area* in 1.9 was chosen such that the *spatial average—temporal average intensity* (obtained by 1.37 and 3.3.2.6 for Gaussian or $(J_1(x)/x)^2$ beam intensity profiles) produces approximately the same maximum temperature rise in tissue as a beam with a cylindrical *intensity* pattern and having the same *spatial average—temporal average intensity* and *beam cross-sectional area.*

**C1.12** The need for changing from a *beam cross-sectional area* ratio of 2:1 (ASA draft ultrasound standard and FDA ultrasound therapy standard) to 4:1 in the definition of *depth of focus* was a result of the Task Group choosing the *beam cross-sectional area* at the 6dB rather than the 20dB level. The *beam cross-sectional area* at the 6dB level would make a flat transducer meet the definition of a focus transducer if the 2:1 ratio were employed.

**C1.13** The term "*intensity*", when unqualified by other adjectives such as "temporal average" is defined relative to the instantaneous power rather than the rms power. This approach is consistent with some of the recent literature and is desirable for conceptual simplicity and more accurate representation, now and in the future, of *waveforms* which deviate significantly from a narrowband, sine wave burst with a rectangular *envelope.*

Copyright National Electrical Manufacturers Association
Provided by IHS under license with NEMA
No reproduction or networking permitted without license from IHS
Not for Resale

**C1.14** When the *pulse duration* is defined as the time interval between the first and last times that the acoustic *waveform* exceeds a certain fraction of the peak value of the *waveform,* it is highly susceptible to minor distortions in the *waveform* produced by the detecting device such as a hydrophone. To increase the reproducibility with which the *pulse duration* can be measured by different individuals with different devices, the *pulse duration* is defined as a multiple of the 10 percent to 90 percent risetime of the time integral of *intensity.* (The final value of this integral is the pulse *intensity integral.*) In this way, *pulse duration* is defined in terms of the time interval during which 80 percent of the energy in the pulse occurs. The multiple (1.25) is selected such that the *pulse duration* defined by this method is equal to the on-time for a tone burst with a rectangular *envelope.*

Copyright National Electrical Manufacturers Association
Provided by IHS under license with NEMA
No reproduction or networking permitted without license from IHS
Not for Resale

# Appendix D
# RATIONALE FOR ACOUSTIC MEASUREMENT METHODS

**(APPROVED AS AUTHORIZED ENGINEERING INFORMATION 9-17-1981.)**

## D1.1 INTRODUCTION

There are other usable measurement methods than those set forth in Section 3. Some are subjects of investigation; others are extremely costly, requiring sophisticated instrumentation not ordinarily available; or are simply very complex. The purpose of Section 3 is to prescribe well established, convenient methods that are easily accessible in the literature. As a point of departure, should the user or manufacturer wish to use other techniques, those techniques shall be equivalent to the prescribed methods set forth in this standard.

*Ultrasonic power* and *intensity* are the acoustical output parameters measured for the requirements of 2.1.

## D1.2 WATER AS A MEASUREMENT MEDIUM

The measurements are to be performed in water because ultrasound propagation in water closely approximates that in tissues. The ultrasonic attenuation in water can be taken as a lower limit on the attenuation which will be encountered in the body. Large areas in the body can consist of low attenuating material such as urine and amniotic fluid. The use of water prevents measurements in a more highly attenuating material such as liver equivalent gels from representing the highest possible intensities which might be encountered in the body. A measurement temperature of 24 ± 3 °C is chosen for convenience.

Hydrophone characteristics specified in 3.3.1 are those which are considered achievable with present technology and which will allow measurement of *intensities* to the accuracy specified in par. 1 of 3.3. The error analysis in subsequent paragraphs will illustrate the need for certain stringent hydrophone characteristics. As indicated in 3.3.1.1 and 3.3.1.2, hydrophones with active elements of polyvinylidene fluoride (PVF2) are recommended mainly due to the smoothness of their response with frequency even over relatively small frequency intervals (Ref. 2). In addition these types of probes show greater comparability from probe to probe in measurements on the same pulsed fields over a large (60 dB) range of *intensities.* This does not imply, however, that future developmental efforts may not result in other polymer and/or ceramic materials being more suitable for hydrophone construction with a smoother response with frequency and a higher sensitivity than PVF2. In Appendix E, it is recommended that the hydrophone be calibrated by recording the field from transducers whose power emissions have been measured with a radiation force balance. This approach is taken because a radiation force balance already is required for power measurements, and is at least equally as convenient as reciprocity techniques. An *intensity* factor is employed in addition to the more common pressure sensitivity factor to minimize the possibility of large errors in calculation of *intensities* from hydrophone signals.

The *intensity* measurements generally are performed in the plane of the maximum *pulse intensity integral* or the *spatial peak—temporal peak intensity* for both focused and nonfocused transducers. In this way, wavefronts within the main lobe of the source transducer's directivity function are approximately planar, and hence, a linear scanning motion may be employed with small errors due to phase cancellation effects. For some auto-scanning systems where the location of the *temporal peak* and *temporal average intensities* differs, the *waveform* and *intensity* information is gathered in the plane of maximum *spatial peak—temporal average intensities.*

Copyright National Electrical Manufacturers Association
Provided by IHS under license with NEMA
No reproduction or networking permitted without license from IHS

Not for Resale

### D1.3 ULTRASONIC POWER MEASUREMENT WITH RADIATION FORCE BALANCE

The radiation force balance was chosen for measurement of *ultrasonic power* because it is conceptually simple, relatively easy to build and use, and provides a measurement which can be referenced to the National Bureau of Standards. The method has been used extensively by numerous investigators and intercomparisons have been carried out with other methods among a variety of laboratories, including the Bureau of Radiological Health and the National Bureau of Standards.

In this guideline, *ultrasonic power* is the primary reference parameter to which all other parameter measurements are related. This is because the other methods require more complex calibration.

The expected uncertainty is less than ± 15 percent, a number which in our judgment includes the potential random and systematic errors associated with the use of the force balance as well as published uncertainties of the NBS calibration devices themselves.

### D1.4 INTENSITY MEASUREMENT WITH HYDROPHONE

*Intensity* was chosen as the basic exposure quantity to be reported. A miniature hydrophone and scanning apparatus is recommended for measurement of intensity despite some practical problems at present. Alternate methods which have possible application include optical methods and reciprocity methods, providing equivalence is shown. In the following discussion, transducer refers to the device whose acoustic output is being measured by a hydrophone acting as a receiver. The favorable points for the use of a hydrophone are:

1. It is convenient.
2. If over the *working frequency range* and temporal peak pressure levels, the hydrophone has uniform frequency response is linear with respect to pressure, the signal is a direct indication of the ultrasonic pressure *waveform* averaged over the area of the active element.
3. When the active element is small enough, the *intensity* as a function of time in the *focal surface* (or at the near-to-*far field* transition for non-focused transducers) may be calculated from the signal with sufficient accuracy. Also spatial patterns in the ultrasonic beam can be resolved to find a spatial peak (SP) where the peak *intensities* are not too high to cause non-linear distortions for the *waveform.*
4. By simple calculation or relatively simple additional instrumentation, it can provide a measurement of *spatial average intensity* and *temporal average intensity.*

The disadvantages are:

1. *Intensity* is not being measured directly.
2. The hydrophone must be calibrated and referenced to *ultrasonic power* as measured by the radiation force balance.
3. The size of the hydrophone must be small with respect to a wavelength or the size must be accounted for by calculation. This presents fabrication and availability problems, inconvenience, or problems in understanding actual performance relative to theoretical models.
4. The frequency response of many present miniature hydrophones leads to significant distortion of the true ultrasound *waveform.*
5. The *temporal peak intensities* experienced with many currently available ultrasound instruments exceed the linear range of currently available hydrophones.

A *pulse intensity integral* is defined and used both to describe the field positions at which the *intensity* parameter measurements for the labeling requirements are to be performed and to calculate these parameters. In this manner, the problems

Copyright National Electrical Manufacturers Association
Provided by IHS under license with NEMA
No reproduction or networking permitted without license from IHS

Not for Resale

relating to effects of non-linearities on the true hydrophone *waveform* are minimized by no longer requiring an accurate measurement of the *spatial peak—temporal peak intensity* (Ref. 3).

## D1.5 UNCERTAINTIES IN POWER AND INTENSITY MEASUREMENT

The uncertainty limits for power and *intensity* determination of 3.3 are set primarily by the accuracy achievable with reasonable effort and the need to provide fair competition between manufacturers which quote these quantities. If risks from diagnostic exposure are documented, it may prove desirable to quote *intensities* to an even higher accuracy.

The level of expected uncertainty listed in 3.3 for *intensity* measurement procedures are based on a 10 percent estimated uncertainty in the source transducer's power as measured with a radiation force balance system which has been calibrated relative to the National Bureau of Standards and on error analyses performed in Reference 2 of 3.3 and References 1-3. The uncertainty of total acoustic power in the measurement plane, $\sigma_B$, is estimated as ± 10 percent the rms combination of four factors—uncertainty in the NBS determination of radiation conductance of source transducers (± 4 percent) (Ref. 1); uncertainty in source transducer excitation voltage measurement from an oscilloscope (± 8 percent); source transducer stability (± 3 percent); variation in attenuation corrections for the water path, taken conservatively to be 10 percent of the correction applied to measurements in 9.3 MHz field (± 3 percent). The uncertainty in determination of $K_f^2$ then is approximately

$$\sigma_k = (\sigma_B^2 + \sigma_{CS}^2 + \sigma_{BP}^2 + \sigma_A^2 + \sigma_V^2)^{1/2} = 18\%,$$

where $\sigma_{CS} \simeq 7$ percent is the error introduced by the assumption of cylindrical beam symmetry from circular transducers (Ref. 2), $\sigma_{BP} \simeq 7$ percent is the reproducibility of beam profile recording and integration, $\sigma_A \simeq 7$ percent is the reproducibility of positioning the hydrophone at the point of the spatial peak of the *pulse intensity integral* (or the maximum *SPTP intensity*) and $\sigma_V \simeq 8$ percent is the intensity error corresponding to the calibration accuracy of an oscilloscope and reading of the peak voltage in the *waveform.*

The uncertainty in $I_{SPTA}$ is approximately

$$\sigma_{SPTA} = (\sigma_k^2 + \sigma_{TI}^2 + \sigma_{stab}^2 + \sigma_{lin}^2 + \sigma_V^2)^{1/2} = 30\%$$

where $\sigma_{TI} \simeq 8$ percent is the error in hydrophone positioning and temporal integration of the *waveform,* $\sigma_{stab} \simeq 12$ percent is the error due to temporal instability of the hydrophone (Ref. 3), and $\sigma_V$ and $\sigma_A$ are given above. The uncertainty due to hydrophone and integral amplifier is taken as $\sigma_{lin} \simeq 15$ percent based on the 10 percent absolute limit on non-linearity in pressure response and an assumed 7 percent standard deviation from pressure linearity. The uncertainty in $I_{SATA}$ is approximately

$$\sigma_{SATA} = (\sigma_{SPTA}^2 + \sigma_{ws}^2 + \sigma_{bp}^2 + \sigma_{CS}^2)^{1/2} = 33\%$$

where $\sigma_{ws} \simeq 8$ percent is the error due to variation in the shape of the *waveform* at locations off the beam axis to the 6 dB point, $\sigma_{bp} \simeq 7$ percent is the error due to beam asymmetries and beam profile recording to the 6 dB point, and $\sigma_{CS}$ is given above. The uncertainty in $I_{SPPA}$ is approximately

$$\sigma_{SPPA} = (\sigma_{SPTA}^2 + \sigma_{PD}^2)^{1/2} = 34\%$$

Copyright National Electrical Manufacturers Association
Provided by IHS under license with NEMA
No reproduction or networking permitted without license from IHS

Not for Resale

where $\sigma_{PD} \simeq 16$ percent is the uncertainty based on the reproducibility of obtain-the pulse duration from different acceptable hydrophones (Ref. 3). All uncertainties are given at approximately the 68 percent confidence level ($1\sigma$), although it must be noted that many of the uncertainties quoted are not totally random errors. These general levels of uncertainty have been verified by calibration of a hydrophone in the manner specified in this standard and use of the hydrophone to measure not only the *intensity* but the total power emitted from several diagnostic ultrasound systems. The percent difference between these power determinations and the power measured with a radiation force balance was 6 percent for 5 sequential linear arrays, 9 percent for 1 mechanical sector scanner, 35 percent for 6 transducers on compound scanners, and 12 percent for a continuous wave Doppler system with a split disc transmitter. The larger apparent uncertainty for hydrophone measurements on the compound scanners resulted from 3 transducer-pulser combinations which produced very high *spatial peak—temporal peak intensities* and very noticeable non-linearities in the *waveforms.*

## REFERENCES

1. M. Greenspan, F.R. Breckenridge and E.C. Tschiegg, "Ultrasonic Transducer Power Output by Modulated Radiation Pressure," H.B.J. Publ. NBSIR 78-1520 (1978).

2. K. Brendel, *et al.*, "Methods of Measuring the Performance of Ultrasonic Pulse-Echo Diagnostic Equipment", Ultrasound in Medicine and Biology 2:343-350, 1976.

3. R.A. Banjavic, P.L. Carson, S.M. Jones, C.R. Meger, and D. Thompson, "Procedures for Use of Calibrated Hydrophones in Acoustic Dosimetry Measurements of Diagnostic Ultrasound", AIP Document PAPS JASMA-70-. . .-70, American Institute of Physics, New York, NY, 1980.

Copyright National Electrical Manufacturers Association
Provided by IHS under license with NEMA
No reproduction or networking permitted without license from IHS

Not for Resale

9009279 0002141 097



# Appendix E
# HYDROPHONE CALIBRATION PROCEDURES

**(APPROVED AS AUTHORIZED ENGINEERING INFORMATION 9-17-1981.)**

## E1.1 HYDROPHONE CALIBRATION PROCEDURES

Purpose: To provide methods for evaluation of hydrophones to assure compliance with the criteria of 3.3.1 over the *working frequency range.* This will allow performance of *intensity* measurements with acceptably small uncertainty.

### E1.1.1 Source Transducers

Source transducers with the radiated power coefficient (power output in watts per unit applied voltage squared) known at appropriate frequencies must be available for calibration of the hydrophone(s) as described in subsequent sections. These source transducers can be either the half-wave resonant, air-backed, quartz transducers available from NBS or a set of in-house source transducers (described in 3.2).

If the NBS standard quartz transducers are to be employed for calibration of the hydrophone, the frequencies available for hydrophone calibration will be those for which the radiated power coefficient has been determined by NBS. At present, frequencies available, including third and fifth harmonics, are 1, 2, 3, 5, 6, 9, 10, and 15 MHz. If in-house source transducers are chosen, they must first be calibrated at the frequencies specified below on a radiation force balance. This balance has itself previously been calibrated as outlined in 3.2. The excitation voltage at which the in-house source transducers are calibrated is recorded.

For *narrowband* source *transducers,* the *center frequency* and possibly the third and fifth harmonic are usable, while for *broadband* source *transducers,* any frequency between the upper and lower half power frequencies usually is acceptable with the following constraint. The frequencies chosen must be those for which no distortion of the transmitted sine wave burst is visible in the hydrophone's voltage *waveform,* since at certain driving frequencies parasitic modes of oscillation at different frequencies can be excited strongly in some source transducers.

The source transducers are ones which do not have severely abnormal sidelobes or severe radial asymmetries.

When *narrowband transducers* are to be measured for acoustic output with the hydrophone, the source transducers (and the hydrophone) should be calibrated at the nominal frequency, $f_n$, for each transducer model to be calibrated by the hydrophone and at $(1.1 \pm 0.05) f_n$ and $(0.9 \pm 0.05) f_n$ for each $f_n$.

When the transducers to be measured with the hydrophone are *broadband transducers,* source transducers (and the hydrophone) should be calibrated for all frequencies $f_{cal,i}$, between $f_{min}$ and $f_{max}$ of the *working frequency range,* where $f_{cal,1} = 1$ MHz, and $f_{cal,i+1} = 1.5\ (f_{cal,i})$ (i.e., $f_{cal,2} = 1.5$ MHz, $f_{cal,3} = 2.25$ MHz, $f_{cal,4} = 3.38$ MHz, etc.). In addition, the calibration should also be performed for a frequency at or below $f_{min}$, and for a frequency at or above $f_{max}$. When the *center frequency* of the *broadband transducers* to be measured exceeds 5.0 MHz, additional points should be taken in the range between $f_{cal,5} = 5.06$ MHz and $f_{max}$. In all cases, calibrations should be performed at a minimum of five different frequencies, where the total number of frequencies used for calibration is $L$.

Before a hydrophone calibrated with these in-house transducers is employed for measurements required in this standard, the calibration of these in-house transducers must first be checked using the radiation force balance. If more than 3 months pass with no hydrophone measurements being made, a recalibration of

Copyright National Electrical Manufacturers Association
Provided by IHS under license with NEMA
No reproduction or networking permitted without license from IHS
Not for Resale

these in-house transducers should be performed to assure no changes have occured. When three consecutive measurements using the radiation force balance show the in-house source transducers to be stable to ± 0.6 dB over a period of one year, their calibration intervals can be extended to one year until an instability of greater than ± 0.6 dB is observed in any one year period.

### E.1.1.2 Measurement of Hydrophone Response

The hydrophone's response is measured as one half of the maximum peak to peak amplitude of the *envelope* of the received voltage *waveform* obtained from the calibrated source transducers when they are driven in a tone burst of at least 15-20 cycles at calibration frequencies within each of the ranges specified in E1.1.1. The power spectra of available source transducers is considered in selecting the precise calibration frequencies. The above hydrophone response then is determined as a function of lateral position. An oscilloscope or other well calibrated device is used to record the temporal *waveform* while a scanning system such as described in 3.3.2 is used for determining the lateral positions.

In the determination of the hydrophone response, especially with long water paths and at frequencies above 3.5 MHz, account may need to be taken of attenuation due to the water path. The ultrasonic attenuation coefficient of pure water at 24 °C is $1.91 \times 10^{-3} f^2$ dB/cm for the frequency range 1-100 MHz, where $f$ is the frequency in MHz. Corrections are made for losses in water when those losses exceed 5 percent in *intensity.*

The measurements of amplitude of hydrophone response as a function of lateral position should be made in the *focal plane* for focused source transducers and at an axial distance of $S/(\pi\lambda)$ for non-focused transducers, where $S$ is the area of the active element. The source transducer and hydrophone are mounted in the scanning apparatus as described in 3.3.2.2.

The source transducer or hydrophone then is scanned linearly, either in a pattern such as a raster to cover the scan plane or in a radial pattern. For the latter, the point of maximum *spatial peak—temporal peak intensity* in the scan plane is localized and lateral beam profiles are obtained which pass through that point. As a minimum, the beam profiles are obtained in two orthogonal directions. If the profiles are asymmetric or later calculations show the *intensity response factor* from these two profiles to differ by greater than 25 percent, profiles also must be taken along at least two additional directions with respect to the original two profiles. The angular increments between each of the radial profiles are equal to 180° divided by the number of profiles. The limits of the linear scanning motion are such as to include all points in the scan plane for which the voltage response of the hydrophone is within 5 percent of the peak voltage response. For best results, the points along the lateral beam profile should be separated by no more than $1\lambda$, the *wavelength* in water.

E1.1.5 gives the method for determination of the *effective radius* $a_e$ of the hydrophone under study. For source transducers having an *effective radius* greater than approximately 5 times the *effective radius* of the hydrophone, no directivity corrections should be required. In other cases, if the theoretical directivity function of the hydrophone for its *effective radius* and at the frequency of calibration is such that the hydrophone voltage response at the angle of the first side lobe of the source transducer is less than 85 percent of the response on the acoustic axis of the hydrophone, one of the following procedures can be added to complete each of the beam profiles above. For the raster scanning motion, a directivity correction must be made to all points in the two-dimensional array to account for the sidelobes present in the beam of the source transducer. For the radial linear profiles, each beam profile in the above paragraph is followed by positioning of the hydrophone at the center of the first sidelobe on one side of

Copyright National Electrical Manufacturers Association
Provided by IHS under license with NEMA
No reproduction or networking permitted without license from IHS
Not for Resale

the source transducer. The hydrophone then is rotated about an axis which is normal to the direction of the beam profile and which passes through the center of the active element of the hydrophone. The rotation is stopped at the angle at which the maximum hydrophone signal is obtained. The beam profile then is repeated, beginning at the central axis and extending until the hydrophone voltage response is reduced to less than 5 percent of the peak response originally obtained on the central axis. The angulation and scanning procedures then are repeated for the sidelobe on the other side of the central axis of the original beam profile. Alternatively, a mechanism may be employed which automatically turns the hydrophone as a linear scan is made. The final composite profile employed for further calculations is the curve of the maximum hydrophone response obtained at each distance along the scan line.

This procedure is repeated for each of the radial beam profiles. Since in most systems, the hydrophone can be rotated only about one axis, it will be necessary to rotate the source transducer about its beam axis, realign it and perform the next radial profile.

### E1.1.3 Intensity Response Factor $K_f^2$

With the assumption of free-field, plane wave incidence and the accompanying relationships, the *intensity response factor,* $K_f^2$, at a given frequency $f$ in water at a specified temperature is calculated (Ref. 2, 3.3) from the measurements of E1.1.2 as:

$$K_f^2 = \frac{hb}{WV_p^2(0)} \qquad (V^2\ W^{-1}\ cm^2)$$

Where $W$ is the acoustic power transmitted from the source transducer at frequency $f$ in water, $V_p(0)$ = the temporal peak hydrophone response obtained on the *beam axis* of the source transducer during beam profiling, and

$$h = \frac{1}{T}\int_0^T V^2(0,t)\,dt.$$

Here, $V(0,t)$ = the hydrophone *waveform* in volts received on the *beam axis* of the source transducer and $T$ = pulse or tone burst repetition period. Also,

$$b = \iint_S V_p^2(\bar{r})\,ds \qquad (V^2\ cm^2)$$

where $S$ is the surface of that part of the plane scanned during beam profiling, defined by the limits $V_p(\bar{r}) \geq 0.05\ V_p(0)$. $V_p(\bar{r})$ is the hydrophone voltage response obtained during beam profiling at a point whose distance and direction from the origin is given by the vector $\bar{r}$, and $ds$ is an infinitesimal element of area in the scan plane.

For transducers with approximate radial symmetry, as is recommended for the source transducers, it is convenient to perform the $N$ beam profiles each passing through the origin, $r = 0$, the *beam axis* of the source transducer. Then,

$$b = (\pi/N)\sum_{i=1}^{N}\int_{-R}^{R} V_p^2(r)\,|r|\,dr,$$

for $N$ profiles spaced at equal angular increments $\Delta\theta$. $N\Delta\theta$ must equal 180° and $N \geq 2$. $R$ is defined such that $V_p(R) \leq 0.05\ V_p(0)$.

For rectangular transducers

$$b = \int_{-x'}^{x'}\int_{-y'}^{y'} V_p(x,0)\,V_p(0,y)\,dx\,dy$$

Copyright National Electrical Manufacturers Association
Provided by IHS under license with NEMA
No reproduction or networking permitted without license from IHS
Not for Resale

where $V_p(x,0)$ and $V_p(0,y)$ are the temporal peak hydrophone responses along two orthogonal beam profiles through the *beam axis,* and parallel to the sides of the transducer, where $\pm x'$ and $\pm y'$ are defined such that

$$\frac{V_p(x',0)}{V_p(0,0)} \leqslant 0.05 \qquad \text{and} \qquad \frac{V_p(0,y')}{V_p(0,0)} \leqslant 0.05.$$

Polynomials of order $Q \leqslant L - 4$, where $L$ was defined in E1.1.1, then are fit by the least squares criterion to the measured values of $K_f^2$. The polynomial which provides the lowest value for the chi-squared goodness of fit test is selected and employed as the curve of the hydrophone response between $f_{min}$ and $f_{max}$.

### E1.1.4 Pressure Sensitivity, $m_f$

The assumption of plane waves incident on the hydrophone during calibration must be made to obtain the hydrophone *pressure sensitivity.* The instantaneous peak wave pressure and particle velocity then are in phase so that the (instantaneous) *intensity* is given by:

$$i(t) = p(t)v(t) = \frac{p^2(t)}{\varrho c}$$

where $\varrho$ is the mass density and $c$ is the speed of sound in the material through which the wave is propagating.

For water at 24 °C this results in the pressure, $p$, in Pascal, given by:

$$p = 1.22 \times 10^5 (i)^{1/2}$$

where $i$ is given in W/cm². Note: 1 Pascal (Pa) = 1 Newton/m²

Thus, the *pressure sensitivity* for the hydrophone at the frequency $f$ in volts per Pascal becomes:

$$m_f = 0.01 \left(\frac{K_f^2}{\varrho c}\right)^{1/2} \quad \text{(V/Pa)}$$

where $K_f^2$ is defined in E1.1.3 and $\varrho$ and $c$, in units of kg/m³ and m/sec, respectively, are taken at the temperature during measurement.

It should be noted that although the pressure sensitivity, $m_f$, is not used directly in this standard, it provides a means of comparison to other international standards.

### E1.1.5 Directivity of Hydrophone and Its Alignment

The directivity pattern of the hydrophone should be checked to determine that it meets the criteria established in 3.3.1. The measurements are performed with the same source transducers as described in E1.1.1 using tone burst pulses of at least 15 cycles for at least two frequencies, $f_u$ at 0.8 $f_{max}$ or greater, and $f_l$ at $(0.5 \pm 0.1)(f_{min} + f_{max})$. To align the axis of symmetry of the hydrophone directivity pattern with the *beam axis* of the source transducer, maximize the pulse echo response of a source transducer to a large planar reflector in the *far field,* and mount the hydrophone with its geometrical axis colinear with the *beam axis* of the source transducer. Then maximize the hydrophone response by alternate rotation of the hydrophone in $\theta_x$ about an axis normal to the geometrical axis of the hydrophone and passing through the center of the face of the active element of the hydrophone, and rotation in $\phi$ about the geometrical axis of the hydrophone. After this maximization, mark the final $\theta_x$ direction on the body of

Copyright National Electrical Manufacturers Association
Provided by IHS under license with NEMA
No reproduction or networking permitted without license from IHS
Not for Resale

the hydrophone to aid future alignment. Each time the hydrophone is used for measurement purposes, this same maximization process should be repeated to verify that the *beam axis* of the hydrophone and *beam axis* of the transmitting transducer are colinear. The hydrophone's response in the form of the amplitude of the received *waveform* then is plotted as the function of the angle of rotation, $\theta_x$, with respect to the geometrical axis of the hydrophone assembly. Points should be taken at least every five degrees out to angles of at least ± 60°.

The *effective radius* $a_e$ in mm of the active element of the hydrophone at each of the two measurement frequencies is determined by inserting the measured half angle $\delta$ of the directivity function at the 3 dB and 6 dB points into the theoretical directivity function and calculating the two values of the effective radius at each frequency. For circular hydrophone apertures of radius $a$, incident waves of wavelength $\lambda$, and measured half angle $\delta$, the pressure directivity function,

$$\frac{2J_1\left[(2\pi a/\lambda)\,Sin\delta\right]}{(2\pi a/\lambda)\,Sin\delta} = \begin{cases} \frac{1}{\sqrt{2}} \text{ for } -3\ dB \\ \frac{1}{2} \text{ for } -6\ dB \end{cases}.$$

This is true when, respectively, at

$$a_3 = \frac{1.62}{2\pi Sin\delta_3} \quad \text{and} \quad a_6 = \frac{2.22}{2\pi Sin\delta_6}$$

At both $f_u$ and $f_l$ calculate $a_e$ from the mean of $a_3$ and $a_6$ using 3dB and 6dB half angles $\delta_3$ and $\delta_6$. These two values of $a_e$ shall be within ± 30 percent of the nominal *effective radius*, $a$, of the active element. That is

$$\frac{|a_e - a|}{a} \leqslant 0.3.$$

If these conditions are not satisfied, measure $a_e$ from the 3 dB and 6 dB widths of the directivity function at four other frequencies between $f_{min}$ and $f_u$ as a function of the rotation angle $\theta_x$. $\bar{a}_{e,f}$ then equals the value at frequency $f$ of the linear regression fit to all six measured radii as a function of frequency. The directivity function as required in E1.1.2 is calculated using $a_{e,f}$ at frequency $f$.

### E1.1.6 Linearity of Hydrophone Response

The following equipment is required:

1. A driving source and focused transducer capable of generating intensities over the entire range required in 3.3.1.4. The *center frequency* is in the upper two-thirds of the *working frequency range.* A broadband pulser and transducer are recommended to reach, with a single system, the highest and lowest *temporal peak intensities* of 3.3.1.4. If this test is to be performed using tone burst pulses, care must be taken not to damage the transducer or heat it sufficiently to change its relative efficiency for transmission and reception, i.e., the product of the *duty factor* and power should be less than that for which the transducer is designed. The heat dissipated in the active element and backing is directly proportional to the total dissipated power which is given by $DV^2/Z$, where $D$ is the *duty factor,* $V$ is the excitation pulse amplitude and $Z$ is the input impedance of the transducer. In some cases, $Z$ can be surprisingly low. To maintain a constant ratio of transmission to pulse echo efficiency with either a short pulse or tone burst, a con-

Copyright National Electrical Manufacturers Association
Provided by IHS under license with NEMA
No reproduction or networking permitted without license from IHS
Not for Resale

figuration such as in Figure E-1 is recommended, but the electrical impedance at point *J* must be independent of transmitted *intensity.*

2. A stainless steel rod with a hemispherical end having a radius of curvature equal to half the diameter, *d,* of the rod. For an incident pulse of center *wavelength* $\lambda_c$, *d* should satisfy

$$3\lambda_c < d\ (\text{mm}) < (F/D)^2\lambda_c$$

where *F* and *D* are the *focal length* and source diameter in mm, respectively.

3. A system for recording the received pulse echo and hydrophone *waveforms* and computing the integral relations below, including a calibrated oscilloscope.

In addition to measurements at one *intensity* $\leqslant I_{SPTP,\ min}$ and one $\geqslant I_{SPTP,\ max}$ of 3.3.1.4, $N - 2$ other measurements should be obtained where $N = 1/10$ of the required linear range of the hydrophone expressed in dB. The measurements should be separated in *intensity* by at least 10 + 5 dB. *N* should be equal to at least four, even if the required linear range in *intensities* is less than 40 dB.

The cylindrical rod is affixed in water with its axis parallel to the *beam axis* of the source transducer. The tip of the rod then is positioned at the center of the last axial zone of maximum temporal peak pulse echo response from the rod tip, and the pulse echo *waveform,* $V_e(t)$, is recorded at each of the *N intensities* specified above. The active element of the hydrophone then is placed at the same location in the field as that occupied by the tip of the rod, and the received hydrophone *waveform,* $V_h(t)$, recorded at exactly the same *intensity* settings.

The integral over time of the square of the amplitude of the voltage *waveform* is calculated for both the pulse echo signal and hydrophone response. The ratio of the square root of this integral for the hydrophone response and the square root of this integral for the pulse echo response is plotted versus the square root of the integral of the hydrophone response. That is,

$$(x_i, y_i) = \left( \left[ \int_{t_1}^{t_2} V_h^2(t)\, dt \right]_i^{1/2}, \frac{\left[ \int_{t_1}^{t_2} V_h^2(t)\, dt \right]_i^{1/2}}{\left[ \int_{t_1}^{t_2} V_e^2(t)\, dt \right]_i^{1/2}} \right)$$

is plotted for each *intensity i,* with $t_1$ and $t_2$ covering the time over which the *envelope* of the signals are non-zero in one pulse.

An approximately straight line of zero slope should result. Using the first three values of $(x_i, y_i)$, corresponding to the lowest *intensities,* the mean value of $y_i$ determined, namely

$$\bar{y} = \frac{\sum_{i=1}^{3} y_i}{3} \quad .$$

For all measurement points determined over the required *intensity* range, the variation of any $y_i$ from $\bar{y}$ should not exceed + 20 percent of $\bar{y}$. A polynomial least squares fit of order $N - 5$ to the *N* points $(x_i, y_i)$ is used as a calibration curve for hydrophones in which any $y_i$ deviates from *y* by more than ±10 percent but less than + 100 percent or − 50 percent.

At the highest *temporal peak intensities* produced by diagnostic systems, most current hydrophones respond nonlinearly due to the presence of higher frequency harmonics in the pressure *waveform.* This affects the shape of the recorded *waveform,* but not the results of the above tests. To improve the appearance and reproducibility of recorded *waveforms,* a first or higher order low pass filter with cutoff frequency higher than two times the *center frequency* of the source transducer may be utilized in the hydrophone signal processing. The effect of the filter on $K_f^2$ at the *center frequency* of the source transducer must be calibrated for each cutoff frequency employed.

Copyright National Electrical Manufacturers Association
Provided by IHS under license with NEMA
No reproduction or networking permitted without license from IHS
Not for Resale

### E1.1.7 Hydrophone Signal-to-Noise Ratio

The signal-to-noise ratio is measured with the same apparatus as described in E1.1.6 and should be determined at the same time as those linearity measurements. With the hydrophone positioned at the point of *spatial peak—temporal peak intensity,* the source transducer settings are adjusted to produce an *intensity* at or below $I_{SPTP,\ min}$ of 3.3.1.4 and the hydrophone *intensity response factor* is employed to measure the incident *intensity.* Visual inspection of the *waveform* on an oscilloscope with and without the source transducer activated usually will be adequate to verify that the rms noise in the *working frequency range* is less than ⅕ of the peak voltage in the *waveform* when the *intensity* incident on the hydrophone is equal to $I_{SPTP,\ min}$ of 3.3.1.4.

**Figure E-1**
**ELECTRICAL CONFIGURATION FOR LINEARITY TEST**

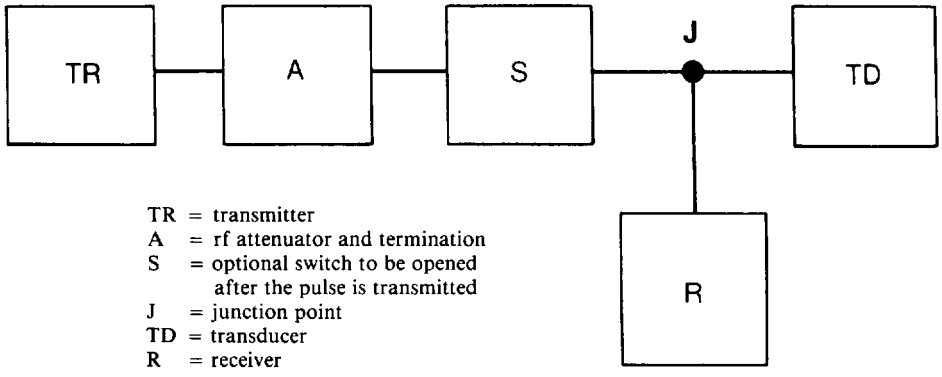


### E1.1.8 Thermal and Temporal Stability

Evaluation and verification of thermal and temporal stability of the hydrophone are performed with the apparatus of E1.1.6 and a thermal control system for the water in the scanning tank which can maintain the water temperature to a uniformity of ± 0.5 °C and to an accuracy of ± 1°C. The pulser is set at reproducible *intensity* settings and the stainless steel rod positioned in the field of the source transducer at the point of the spatial peak of the *pulse intensity integral* or the point of *spatial peak—temporal peak intensity.* The received pulse echo *waveform* is recorded and the rod then replaced by the hydrophone as in E1.1.6. After recording of the received hydrophone *waveform,* the ratio *R* of the temporal peak voltage in the hydrophone response to that in the pulse echo signal is calculated and recorded.

Thermal stability is verified by repeating the above procedure for determination of *R* at 2°C increments between 18 and 30°C. The hydrophone is acceptable is no recorded value of *R* differs from the value at 24°C by greater than ± ½ dB.

Temporal stability is verified at 24°C by repeating the above procedure of obtaining a permanent recording of the *waveform* and calculating *R* at least quarterly. No value of *R* should differ from the first value determined by greater than ± 1 dB. Care must be taken to follow consistent procedures in the storage and treatment of the hydrophone prior to its use in measurements as well as prior to stability tests. In particular, thermal conditions during storage and the duration of hydrophone immersion in water prior to use may be critical to its performance. If no data is available on stability as a function of duration of immersion in water, the temporal stability test should be repeated as a function of time of immersion in water over a period of one week. A continuous sub-

Copyright National Electrical Manufacturers Association
Provided by IHS under license with NEMA
No reproduction or networking permitted without license from IHS
Not for Resale

mersion time of greater than 48 hours should be avoided with a "rest-time" of about 24 hours recommended between submersions. It may be useful to perform the thermal and temporal stability tests with two complete sets of apparata including a pulser, transducer and receiver, so that it can be determined whether any observed instability is due to the hydrophone or the supporting equipment with which the stability measurements are made.

Measurements of the *intensity response factor,* $K_f^2$, (E1.1.3) at a frequency near the maximum, middle and minimum frequency of the *working frequency range* should be performed whenever the specified temporal stability tests cannot indicate a stability of ± ½ dB in hydrophone response. If the relative values of $K_f^2$ at any two of the three frequencies differ by more than 30 percent of their mean, $K_f^2$ should be determined at all frequencies specified in E1.1.1 and a new calibration curve generated.

Copyright National Electrical Manufacturers Association
Provided by IHS under license with NEMA
No reproduction or networking permitted without license from IHS

Not for Resale

# Appendix F
# RATIONALE FOR
# ELECTRICAL MECHANICAL SAFETY REQUIREMENTS

**(APPROVED AS AUTHORIZED ENGINEERING INFORMATION 9-17-1981.)**

**F1.1** This AIUM-NEMA Ultrasound Safety Standard incorporated the AAMI/ ANSI 12/78 "Safety Current Limits for Electromedical Apparatus" as governing the electrical leakage current limits for diagnostic ultrasound equipment. This standard provides limits and referee test methods for electrical risk currents associated with the use of electromedical equipment.

Constructional features of electromedical equipment and the associated testing procedures which may affect safety are covered by a number of other standards; and equipment designers and manufacturers are encouraged to read and apply appropriate portions of these standards.

These standards are, but are not limited to, the following:

UL 544, *Standard for Medical and Dental Equipment*
Underwriters Laboratories, Inc.
1285 Walt Whitman Road
Melville, L.I., NY 11747

NPFA 76B, *Safe Use of Electricity in Patient Care Areas of Hospitals,* 1980
National Fire Protection Association, Inc.
Batterymarch Park, Quincy, MA 02269

IEC 601-1, *Safety of Medical Electrical Equipment, Part 1: General Requirements,* 1977
International Electrotechnical Commission
1, rue de Varembe
Geneva, Switzerland

CSA C22.2 No. 125-1973, *Electro-Medical Equipment*
Canadian Standards Association
178 Rexdale Blvd.
Rexdale, Ontario, Canada, M9W 1R3

Copyright National Electrical Manufacturers Association
Provided by IHS under license with NEMA
No reproduction or networking permitted without license from IHS
Not for Resale

9009279 0002150 0TT

# NEMA STANDARDIZATION

The purpose of NEMA Standards, their classification and status are set forth in certain clauses of the NEMA Bylaws, which are quoted below:

## Purpose of Standards

National Electrical Manufacturers Association Standards are adopted in the public interest and are designed to eliminate misunderstandings between the manufacturer and the purchaser and to assist the purchaser in selecting and obtaining the proper product for its particular need. Existence of a National Electrical Manufacturers Association Standard does not in any respect preclude any member or nonmember from manufacturing or selling products not conforming to the standard.

*(Bylaw—Art. V, Sec. 1)*

## Definition of a Standard

A standard of the National Electrical Manufacturers Association defines a product, process or procedure with reference to one or more of the following: nomenclature, composition, construction, dimensions, tolerances, safety, operating characteristics, performance, rating, testing, and the service for which they are designed.

*(Bylaw—Art. V, Sec. 2, Subsection A)*

## Dimensions

Where dimensions are given for interchangeability purposes, alternate dimensions satisfying the other provisions of the standards publication may be capable of otherwise equivalent performance.

*(NEMA Policy Memorandum 84-2, dated June 7, 1984)*

## Classes of Standards

National Electrical Manufacturers Association Standards are of two classes:

1. NEMA Standard, which relates to a product commercially standardized and subject to repetitive manufacture, which standard has been approved by at least 90 percent of the members of the Subdivision eligible to vote thereon;
2. Suggested Standard for Future Design, which may not have been regularly applied to a commercial product, but which suggests a sound engineering approach to future development, which standard has been approved by at least two-thirds of the members of the Subdivision eligible to vote thereon.

*(Bylaw—Art. V, Sec. 2, Subsection B)*

## Authorized Engineering Information

Authorized Engineering Information consists of explanatory data and other engineering information of an informative character not falling within the classification of NEMA Standard or Suggested Standard for Future Design.

*(Bylaw—Art. V, Sec. 6, 1st Sentence)*

## Official Standards Proposal

An Official Standards Proposal is an official draft of a proposed standard which is formally recommended to an outside organization(s) for consideration, comment and/or approval.

*(Bylaw—Art. V, Sec. 4, Subsection A)*

## Identification of Status

Standards in NEMA Standards Publications are identified in the foreword or following each standard as "NEMA Standard" or "Suggested Standard for Future Design." These indicate the status of the standard. These words are followed by a date which indicates when the standard was adopted in its present form by the Association.

The material identified as "Authorized Engineering Information" and "Official Standards Proposal" is designated similarly.

Copyright National Electrical Manufacturers Association
Provided by IHS under license with NEMA
No reproduction or networking permitted without license from IHS
Not for Resale

9009279 0002151 T36

# ULTRASOUND IMAGING SECTION
# OF THE
# NATIONAL ELECTRICAL MANUFACTURERS ASSOCIATION

## MEMBER COMPANIES

ADR Ultrasound
Tempe, AZ 85282

Advanced Technology Laboratories, Inc.
Bellevue, WA 98005

Boehringer Mannheim Corporation
Medical Imaging Division
Indianapolis, IN 46250

Brattle Instrument Corporation
Cambridge, MA 02139

CGR Medical Corporation
Baltimore, MD 21223

Diasonics, Inc.
Sunnyvale, CA 94086

Ekoline, Inc.
Sunnyvale, CA 94086

EBM Corporation
Seattle, WA 98102

Elscint, Inc.
Boston, MA 02215

E-for-M/Honeywell
Denver, CO 80217

Fischer Ultrasound Ltd.
Franklin Park, IL 50131

General Electric Company
Medical Systems Division
Milwaukee, WI 53201

Hewlett-Packard Company
Medical Products Group
Andover, MA 01810

High Stoy Technological Corporation
Lake Success, NY 11042

Hoffrel Instruments, Inc.
South Norwalk, CT 06854

Irex Corporation
Ramsey, NJ 07446

KB-Aerotech
Lewistown, PA 17044

Medasonics, Inc.
Mountain View, CA 94042

Medical Data Systems
Division of Medtronic, Inc.
Ann Arbor, MI 48105

Nuclear Associates
Division of Victoreen, Inc.
Carle Place, NY 11514

Philips Ultrasound, Inc.
Santa Ana, CA 92704

Picker International, Inc.
Northford, CT 06472

Siemens Corporation
Iselin, NJ 08830

Technicare Corporation
Englewood, CO 80112

Xerox Medical Systems
Pasadena, CA 91107

Xonics Medical Systems
Des Plaines, IL 60018

Printed in U.S.A.

Copyright National Electrical Manufacturers Association
Provided by IHS under license with NEMA
No reproduction or networking permitted without license from IHS
Not for Resale