NEMA Standards Publication No. UC 2-1993 (R2000)

Undercarpet Power Distribution Systems

Published by:

National Electrical Manufacturers Association
1300 North 17th Street, Suite 1847
Rosslyn, VA 22209

© Copyright 2001 by the National Electrical Manufacturers Association. All rights including translation into other languages reserved under the Universal Copyright Convention, the Berne Convention for the Protection of Literary and Artistic Works, and the International and Pan American Copyright Conventions.

Copyright National Electrical Manufacturers Association
Provided by IHS under license with NEMA
No reproduction or networking permitted without license from IHS
Not for Resale

TABLE OF CONTENTS

		Page
	FOREWORD	i
	SCOPE	i
Section 1	REFERENCED STANDARDS AND DEFINITIONS	
	Referenced Standards	1
	Hardware	2
	Definitions	2
Section 2	RATINGS	
	Ratings	5
	Current Ratings (amperes)	5
	Voltage Ratings (volts)	5
	Temperature Ratings (°C)	5
Section 3	CONSTRUCTION	
	Contruction of Boxes And Pedestals	7
	Flat Conductor Cable (Type FCC)	7
	Connectors: Cable and Transition (Type FCC)	7
	Shield Connectors	7
	Insulators And Insulating Ends	7
	Receptacles	7
	Shields (Bottom and Top)	7
	Steel Tape	8
Section 4	PERFORMANCE	
	Performance	9
	Component Tests	9
	Properties of Conductors	9
	Properties Of Finished Cable	10
	Type FCC Undercarpet Wiring System Test	19
	Temperature Rise	19
	Static Heating	21
	Heat Cycling With Mechanical Abuse and Electrical Abuse	21
	Material Compatibility and Degradation Tests	22
	Fault Penetration	22
	Ground Fault Test	23
Section 5	MARKING	
	Transition Assemblies, Insulators, Fittings and Devices	25
	Top Shield	25
	Cable (Type FCC) Marking	25
	Tag, Reel, and Carton Marking	25
	Optional Markings	25
	Instructions For Installation	25

Copyright National Electrical Manufacturers Association
Provided by IHS under license with NEMA
No reproduction or networking permitted without license from IHS
Not for Resale

FOREWORD

The purpose of this Standards Publication is to define the performance requirements for Type FCC systems.

In the preparation of this standard, input of users and other interested parties has been sought and evaluated. Inquiries, comments, and proposed or recommended revisions should be submitted to the concerned NEMA product subdivision by contacting the:

Vice-President, Engineering
National Electrical Manufacturers Association
2101 L. Street, N.W.
Washington, DC 20037

SCOPE

This systems based standard defines the component parts of the system and establishes ratings, electrical and mechanical performance properties, and test procedures for installed systems.

Copyright National Electrical Manufacturers Association
Provided by IHS under license with NEMA
No reproduction or networking permitted without license from IHS
Not for Resale

SECTION 1
REFERENCED STANDARDS AND DEFINITIONS

1.1 REFERENCED STANDARDS

Canadian Standards Association
178 Rexdale Boulevard
Rexdale, Ontario, Canada M9W 1R3

C22.2 No. 222-M1986	*Type FCC Under-Carpet Wiring System*
C22.2 No. 18-M1987	*Outlet Boxes, Conduit Boxes, and Fittings*
C22.2 No. 40-M1973	*Cutout, Junction, and Pull Boxes*
C22.2 No. 42-M1984	*General Use Receptacles, Attachment Plugs, and Similar Wiring Devices*
C22.2 No. 0.6-M1982	*Flammability Testing of Polymeric Materials*
C22.2 No. 65- 1956	*Construction and Test of Wire Connectors Bulletin 677*

The Institute for Interconnecting and Packaging Electronic Circuits
7380 North Lincoln Avenue
Lincolnwod, Illinois 60646

FC 210-1986	*Performance Specification for Flat-Conductor Undercarpet Power Cable (Type FCC)*

National Electrical Manufacturers Association
2101 L Street, N.W.
Washington, DC 20037

OS 1-1984	*Sheet-Steel Outlet Boxes, Device Boxes, Covers and Box Supports*
WD 1-1983 (R1989)	*General Requirements for Wiring Devices*
WD 6-1983	*Wiring Devices—Dimensional Requirements*

National Fire Protection Association
Battery March Park
Quincy, MA 02269

NFPA 70-1990	*National Electrical Code*

American Society for Testing and Materials
1916 Race Street
Philadelphia, Pennsylvania 19103

D573-88	*Standard Test Method for Rubber—Deterioration in an Air Oven*

Copyright National Electrical Manufacturers Association
Provided by IHS under license with NEMA
No reproduction or networking permitted without license from IHS
Not for Resale

Underwriters Laboratories, Incorporated
333 Pfingsten Road
Northbrook, IL 60062

UL 50-1988	*Cabinets and Boxes*
UL 514A-1984	*Metallic Outlet Boxes*
UL 514B-1988	*Fittings for Conduit and Outlet Boxes*
UL 514C-1988	*Nonmetallic Outlet Boxes, Flush Device Boxes, and Covers*
UL 498-1986	*Attachment Plugs and Receptacles*
UL 510-1986	*Insulating Tape*
UL 83-1991	*Thermoplastic-Insulated Wires and Cables*
UL 486A-1991	*Wire Connectors and Soldering Lugs for Use with Copper Conductors*
UL 1059-1988	*Terminal Blocks*
UL 1581-1991	*Reference Standard for Electrical Wires, Cables, and Flexible Cords*

1.2 HARDWARE

Hardware as specified in this Standards Publication shall meet the requirements as specified in Table 1-1.

1.3 DEFINITIONS

AWG EQUIVALENT

The AWG equivalent is the equivalent round conductor gauge as defined by the *National Electrical Code*.

BOTTOM SHIELD

A Bottom Shield is a protective layer which is installed between the floor and Type FCC flat conductor cable to protect the cable from physical damage. In some systems, the bottom shield is incorporated as an integral part of the cable, while in others it is a separate component.

BOX

A Box is a protective housing that provides a degree of electrical and mechanical protection to the interconnections of the Transition Assembly.

CABLE CONNECTORS, TYPE FCC

Cable Connectors are devices used for joining Type FCC flat conductor cables, with or without the use of junction boxes, having the capability of carrying the amperage for which the Type FCC conductors are rated.

DEVICES

Devices are units of FCC systems which are intended to carry, but not utilize electrical energy. Examples of devices are: receptacles, switches, transition connectors, and terminal blocks.

FITTINGS

Fittings are accessories of Type FCC systems that perform primarily mechanical rather than electrical functions. Examples of fittings are: strain reliefs, hardware, and box covers.

Table 1-1
HARDWARE REQUIREMENTS

	UL	C.S.A. 22.2	IPC	NEMA
Boxes	514, 50	18, 40		OS 1, OS 2
Receptacles	498	42		WD 1, WD 6
Bottom Shield	514, 510, 83	18, 40, 0.6		
Pedestals	514	18, 40		
Connectors (Terminal Blocks)	486A, 1059	65		UC 2
Flat Conductor Cable	83, 1581		210	
Top Shield	514	18, 40		
Steel Tape	514	18, 40		

Copyright National Electrical Manufacturers Association
Provided by IHS under license with NEMA
No reproduction or networking permitted without license from IHS
Not for Resale

FLAT CONDUCTOR CABLE (TYPE FCC)

Type FCC Flat Conductor Cable consists of three or more flat conductors including bare or insulated grounding conductor laid flat and parallel in the same plane separated by and enclosed within an insulating assembly.

FLAT CONDUCTOR CABLE ASSEMBLY (TYPE FCC)

A Flat Conductor Cable Assembly (Type FCC) shall consist of a top shield, a bottom shield, and Type FCC Cable. Additional means shall be permitted to be provided for further protection of the Type FCC Assembly.

TYPE FCC SYSTEM

A Type FCC system is a complete wiring system for branch circuits that is designed for installation under carpet squares. The Type FCC system includes Type FCC cable and associated shielding, connectors, terminators, adapters, boxes, and receptacles.

FLOOR MOUNT TRANSITION ASSEMBLY (TYPE FCC)

A Floor Mount Transition Assembly (Type FCC) is a transition assembly intended to be mounted on the surface of the floor on which the Type FCC system is to be installed.

FLOOR PREPARATION

A coating film, or tape, either conductive or non-conductive, that may be applied to the floor surface prior to installation of the undercarpet power distribution system to provide the system with an additional degree of protection from floor roughness or moisture.

FLUSH MOUNT TRANSITION ASSEMBLY (TYPE FCC)

A Flush Mount Transition Assembly (Type FCC) is a transition assembly which is intended to be recess-mounted with its face flush with the surface of the floor, wall, or column on which the Type FCC system is to be installed.

HARDWARE

Hardware means parts that are used for completing the assembly or installation of the Type FCC system. Examples of hardware are: nuts, bolts, anchors, and such.

INSULATORS

Insulators or insulating assemblies are used for electrically isolating current-carrying members, taps, or splices used in Type FCC systems, when those members, taps, or splices are not installed in other insulating means.

INSULATING ENDS

Insulating Ends are insulators designed to electrically insulate the ends of Type FCC cables when those cables are not installed in other insulating means.

METAL SHIELD CONNECTOR

A Metal Shield Connector is a connector designed to electrically connect a metal shield to another metal shield, a receptacle housing, a self-contained device, or a transition assembly.

NUMBER OF CONDUCTORS

Type FCC Flat Conductor Cable configurations shall have 3 or more conductors, including the grounding conductor.

PEDESTAL TRANSITION ASSEMBLY

A Pedestal Transition Assembly is a transition assembly intended to be mounted on the surface of the floor on which it is to be installed and which contains provisions for the mounting and the electrical connection of power outlets. Pedestals shall also be permitted to contain provisions for data and communications outlets.

PLUG

A plug is a device with male contacts which, when inserted into a receptacle, establishes connection between the conductors of the attached flexible cord and the conductors connected to the receptacle.

RECEPTACLES

Receptacles are devices with female contacts, rated electrically in amperes and volts, which are primarily installed at an outlet or on equipment, and which are intended to establish electrical connections with an inserted plug.

STRAIN RELIEF

A Strain Relief is a mechanism for securing a Type FCC Cable assembly to prevent unnecessary strain on its electrical/mechanical connections.

STEEL TAPE

A Steel Tape is a steel overlay which is used in some Type FCC systems to minimize physical damage to the undercarpet components of the Type FCC system.

SURFACE MOUNT TRANSITION ASSEMBLY

A Surface Mount Transition Assembly (Type FCC) is a transition assembly which is intended to be mounted on the surface of the wall, floor, or column on which the Type FCC system is to be installed.

TOP SHIELD

A Top Shield is a grounded, electrically conductive covering for undercarpet components of a Type FCC system. A top shield provides a degree of protection against physical damage. In some systems, the top shield

Copyright National Electrical Manufacturers Association
Provided by IHS under license with NEMA
No reproduction or networking permitted without license from IHS

Not for Resale

is incorporated as an integral part of the cable, while in others it is a separate component.

TRANSITION ASSEMBLY

A Transition Assembly is an assembly which facilitates connection of the Type FCC system to other approved wiring systems incorporating a:

a. means of electrical interconnection (a transition connector)

b. box or covering for providing a degree of electrical safety and protection against physical damage.

Transition assemblies, as defined by this Standards Publication, include but are not limited to:

a. flush mount transition assemblies

b. surface mount transition assemblies

c. floor mount transition assemblies

d. pedestal transition assemblies.

TRANSITION CONNECTORS (TYPE FCC)

Transition Connectors are connectors used to electrically interconnect Type FCC system to other approved wiring.

Copyright National Electrical Manufacturers Association
Provided by IHS under license with NEMA
No reproduction or networking permitted without license from IHS
Not for Resale

SECTION 2
RATINGS

2.1 RATINGS

Flat Conductor Cable (Type FCC) shall have the following ratings: current, voltage, and temperature.

2.2 CURRENT RATINGS (Amperes)

Current Ratings for Flat Conductor Cable (Type FCC) shall be 20 and 30 amperes.

2.3 VOLTAGE RATINGS (Volts)

Flat Conductor Cable (Type FCC) shall be designed for use on voltage systems rated up to 300 VAC between ungrounded conductors, and up to 150 VAC between grounded and ungrounded conductors.

2.4 TEMPERATURE RATINGS (°C)

Insulating materials used in Flat Conductor Cable (Type FCC) shall be rated at least 60°C.

Copyright National Electrical Manufacturers Association
Provided by IHS under license with NEMA
No reproduction or networking permitted without license from IHS
Not for Resale

SECTION 3
CONSTRUCTION

3.1 CONSTRUCTION OF BOXES AND PEDESTALS

Boxes, Pedestals, and Related Hardware used in conjunction with Flat Conductor Cable systems (Type FCC) shall meet the applicable construction requirements as specified in Table 1-1.

3.2 FLAT CONDUCTOR CABLE (TYPE FCC)

Cable (Type FCC) shall meet the applicable requirements as specified in Table 1-1.

3.3 CONNECTORS: CABLE AND TRANSITION (TYPE FCC)

3.3.1 Cable Connectors (Type FCC)

Connectors used for terminating, joining, or splicing any Type FCC conductor shall be mechanically and electrically compatible with the Type FCC system with which they are intended to be used and shall comply with the applicable requirements noted in Table 1-1.

3.3.2 Transition Connectors

A transition connector which facilitates connection of Type FCC systems to other approved wiring systems shall meet the applicable construction requirements of Table 1-1.

3.3.3 Polarity

In Flat Conductor Cable (Type FCC), a method shall be provided to ensure that the proper polarity orientation of the cable is maintained during installation. This shall be permitted to be accomplished by marking, fixturing, or other acceptable means.

3.4 SHIELD CONNECTORS

Connectors used for terminating, joining, or splicing any conductive shield shall be mechanically and electrically compatible with the Type FCC system with which they are intended to be used.

3.5 INSULATORS AND INSULATING ENDS

Insulators and Insulating Ends shall be constructed so as to seal, protect, and insulate splices, taps, cable ends, and exposed current carrying conductors of the Type FCC system with which they are intended to be used.

3.6 RECEPTACLES

Receptacles intended for use with Flat Conductor Cable systems (Type FCC) shall meet the applicable construction requirements as specified in Table 1-1.

3.7 SHIELDS (BOTTOM AND TOP)

3.7.1 Bottom Shield

a. The bottom shield (Type FCC) shall be constructed so as to be mechanically and electrically compatible with the Type FCC system with which it is intended to be used.

b. The bottom shield shall be of equal or greater width than the Flat Conductor Cable with which it is to be utilized.

c. The bottom shield shall be permitted to be constructed either of metallic or nonmetallic materials.

d. The bottom shield constructed of metallic materials shall meet the equivalent corrosion requirements for exposed surfaces as specified in Table 1-1.

e. The non-integral bottom shield constructed of nonmetallic materials shall meet the flammability requirements of the vertical flame test as specified in 4.4.3.3.4.

f. A conductive metallic bottom shield shall be electrically continuous and shall be bondable to the grounding conductor at each point of connection to a device.

g. The metallic bottom shield shall have cross-sectional areas that provide for electrical resistivity of not more than that of one conductor of the Type FCC cable used in the installation.

3.7.2 Top Shield

a. The top shield shall be electrically conductive and electrically continuous and shall be bondable to the grounding conductor at each point of connection to a device.

b. The top shield shall have cross-sectional areas that provide for electrical resistivity of not more than that of any one conductor of the Type FCC cable used in the installation.

c. The top shield shall meet the equivalent corrosion requirements for exposed surfaces as specified in Table 1-1.

d. The top shield shall be of equal or greater width than the Flat Conductor Cable with which it is used.

Previous page is blank

Copyright National Electrical Manufacturers Association
Provided by IHS under license with NEMA
No reproduction or networking permitted without license from IHS

Not for Resale

3.8 STEEL TAPE

a. If used, steel tape shall be constructed so as to be mechanically and electrically compatible with the Type FCC system with which it is intended to be used.

b. Steel tape shall meet the equivalent corrosion requirements for exposed surfaces as specified in Table 1-1.

c. Steel tape shall be of equal or greater width than the flat conductor cable with which it is used.

Copyright National Electrical Manufacturers Association
Provided by IHS under license with NEMA
No reproduction or networking permitted without license from IHS

Not for Resale

SECTION 4
PERFORMANCE

4.1 PERFORMANCE

In order to ensure acceptable system performance when subjected to typical service and installation conditions, Flat Conductor Cable systems (Type FCC) and system components shall be subjected to the following performance tests as specified in 4.2 through 4.7. Unless otherwise specified, the tests shall be carried out at an ambient temperature of 25.0° ± 5°C.

4.2 COMPONENT TESTS

4.2.1 Boxes and Pedestals

Boxes and pedestals intended for use with Type FCC systems shall comply with the applicable construction requirements as specified in Table 1-1.

4.2.2 Flat Conductor Cable (Type FCC)

Flat Conductor Cable (Type FCC) shall meet the applicable requirements of 4.3, 4.4, and Table 1-1.

4.2.3 Receptacles

Receptacles intended for use with Flat Conductor Cable systems (Type FCC) shall meet the applicable performance requirements of Table 1-1.

4.2.4 Connectors (Cable and Transition)

Connectors (Type FCC) shall meet the applicable system performance requirements of 4.5 and the applicable requirements as specified in Table 1-1.

4.2.5 Insulators and Insulating Ends

Insulators and insulating ends shall meet the electrical and mechanical performance requirements specified in 4.5 and shall be suitable for the environment in which they are intended to be applied.

4.3 PROPERTIES OF CONDUCTORS

4.3.1 Electrical Resistance

The direct current resistance of the cable conductors, including the grounding conductor, shall be not greater than given in Table 4-1.

Table 4-1
ELECTRICAL RESISTANCE OF CONDUCTORS

Equivalent Conductor Size, AWG	Maximum dc Resistance of Conductors, ohms/1000 ft. at 25°C
12	1.62
10	1.02

4.3.2 Conductor Resistance

Conductor resistance shall be determined with the apparatus and according to the method described in 4.3.2.1 through 4.3.2.5.

4.3.2.1 APPARATUS

Conductor resistance shall be measured by a four-terminal method for specimens of resistance of 1 ohm or less, while a two-terminal method shall be permitted to be used for specimens of resistance greater than 1 ohm.

4.3.2.2 SPECIMEN

The specimen shall be a length taken from a finished wire or cable and shall have the following characteristics.

a. A resistance of at least 0.00001 ohm (10 micro-ohms) in the test length between potential contacts

b. No surface cracks or defects visible to the unaided normal eye, and a surface that is substantially free from surface oxide, dirt, and grease

c. No joints or splices

4.3.2.3 PROCEDURE

When potential leads are used, the distance between each potential contact and the corresponding current contact shall be at least equal to 1½ times the perimeter of the specimen. The yoke resistance (between reference standard and test specimen) shall be appreciably smaller than that of either reference standard or the test specimen unless a suitable lead compensation method is used, or it is known that the coil and lead ratios are sufficiently balanced so that variation in yoke resistance will not decrease the bridge accuracy below rated requirements.

Resistance measurements shall be made to an accuracy of ±0.3%. To ensure a correct reading, the reference standard and the test specimen shall be the same temperature as the surrounding medium. (If the reference standard is made of manganin, it is possible to obtain correct readings with the test specimen at reference temperatures other than room temperature.

In resistance measurements, the measuring current raises the temperature of the specimen above that of the surrounding medium. Therefore, care shall be taken to keep the magnitude of the current low and the time of its use short enough so that the change in resistance cannot be detected with the galvanometer.

To eliminate errors due to contact potential, two readings, one direct and one with current reversed, shall be

Copyright National Electrical Manufacturers Association
Provided by IHS under license with NEMA
No reproduction or networking permitted without license from IHS

Not for Resale

taken in direct succession. Surface cleaning of the specimen at current and potential contact points shall be necessary to obtain good electrical contact.

4.3.2.4 CALCULATION

Resistance per 1,000 feet of conductor shall be calculated from the formula:

$$R = \frac{r \times 1000}{L} \text{ ohms per 1,000 feet}$$

Where:

r = measured resistance of specimen at existing ambient temperature in ohms
L = gauge length in feet

4.3.2.5 TEMPERATURE CORRECTION

When the resistance is required to be known at a temperature of 25°C, and has been measured at some other ambient temperature, a multiplying factor, as specified in Table 4-2 for the existing ambient temperature, shall be applied to the calculation outlined in 4.3.2.4. The temperature of the specimen shall be measured with an accuracy of ±1.0°C.

4.4 PROPERTIES OF FINISHED CABLE

4.4.1 Deformation

The thickness of the insulation on the conductors shall not decrease more than 50% in thickness when subjected to a temperature of 121° ±1°C for a period of 1 hour while under a load of 18 ounces (500 g).

Compliance with the deformation test shall be determined with the apparatus and according to the method described in 4.4.1.1 through 4.4.1.4.

4.4.1.1 APPARATUS

The apparatus for the determination of percent deformation shall consist of:

a. An oven, capable of maintaining the required air temperature and having the characteristics required by ASTM D573

b. The necessary weights mounted in a metal frame so as to have free vertical movement, as illustrated in Figure 4-1. The weight shall be provided with a 3/8-inch diameter flat foot, slightly rounded at the edges, and intended to bear upon the specimen under test.

4.4.1.2 SPECIMEN

The specimen shall be a 1-inch long piece of insulated cable.

4.4.1.3 CALCULATION

Insulated Conductor Specimen. The percentage deformation of the specimen shall be computed according to the formula:

$$\text{Percent Deformation} = \frac{T_1 - T_3}{T_1 - T_2} \times 100$$

Where:

T_1 = insulated cable thickness as received
T_2 = conductor thickness
T_3 = insulated cable thickness after test

Table 4-2
FACTORS FOR CORRECTING RESISTANCE TO 25°C

Existing Ambient Temperature, °C	Multiplying Factors for Copper
0	1.107
5	1.084
10	1.061
15	1.040
20	1.020
25	1.000
30	0.981
35	0.963
40	0.945
45	0.928
50	0.912

Note: Factors for temperatures between those listed in the above table may be permitted to be obtained by interpolation.

Copyright National Electrical Manufacturers Association
Provided by IHS under license with NEMA
No reproduction or networking permitted without license from IHS
Not for Resale

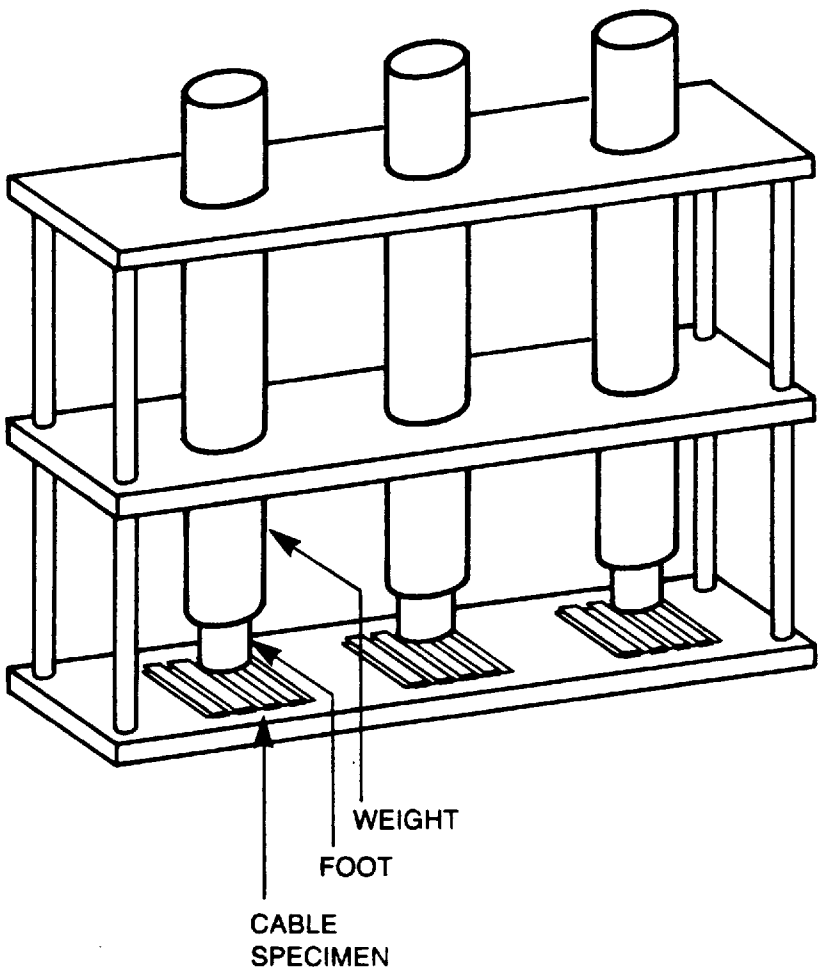

Figure 4-1
ILLUSTRATING WEIGHTS AND SPECIMENS IN SUPPORTING FRAME FOR DEFORMATION TEST

Copyright National Electrical Manufacturers Association
Provided by IHS under license with NEMA
No reproduction or networking permitted without license from IHS

Not for Resale

4.4.1.4 PROCEDURE

The thickness T_1 shall be measured to the nearest 0.0005 inch by means of a dead-weight dial micrometer whose presser foot exerts a load of 3.0 ±0.1 ounce on the specimen. The presser foot shall have a flat face 0.250 ± 0.010 inch or 0.375 ± 0.010 inch in diameter. The anvil of the instrument is to be at least 1.5 inches in diameter and shall be parallel to the face of the presser foot.

The thickness of the conductor T_2 shall be measured to 0.0005 inches with a dial micrometer. The insulated cable thickness of T_3 at elevated temperature shall be determined from measurements made by means of a dead-weight dial micrometer with a presser foot 0.375 ± 0.010 inch in diameter and with graduations of 0.0005 inch. The micrometer shall be actuated by a weight of a magnitude that causes the foot of the micrometer to press on a specimen positioned between the foot and the anvil with the 18 oz. load. With the applicable weight in place on its spindle, the micrometer shall be placed beside the test specimen in a full-draft circulating-air oven that has been preheated to a temperature of 121.0° ± 1.0°C (249.8° ± 1.8°F). The specimen and micrometer shall remain side by side in the oven for 1 hour of preliminary heating at full draft. At the end of the hour, the specimen shall be placed on the anvil of the micrometer. The loaded presser foot shall be gently brought to bear on the specimen and shall continue to bear on the specimen, while the micrometer and specimen remain in the oven for an additional hour at full draft. At the end of the second hour, the thickness T_3 of the specimen shall be read directly from the dial on the loaded micrometer and shall be recorded to the nearest 0.0005 inch.

4.4.2 Cold Bend

The insulation shall show no cracks when a 20 inch specimen of the Type FCC cable has been exposed to a temperature of minus 18° ± 1°C for at least 1 hour, and while still at this temperature bent 180 degrees around a 1/16-inch thick piece of sheet stock with a 1/32-inch radius on one end.

The specimens shall be removed and examined in the wrapped position at 3× magnification for insulation cracks or separations. The dielectric withstand test described in 4.4.4 shall be carried out after the specimen has been immersed in tap water for 1 hour.

The apparatus shall include a chamber capable of maintaining the required test temperature. The chamber shall be large enough to facilitate a means for completing the bending operation on the necessary mandrel.

4.4.3 Flame Tests

The flame tests described in 4.4.3.3 shall utilize the apparatus described in 4.4.3.1.

4.4.3.1 APPARATUS

The apparatus for this test shall be as follows: a test chamber of sheet metal 12 inches wide, 14 inches deep and 24 inches high, open at the top and front and provided with means for supporting the test specimen in a vertical or horizontal position, as required by the individual test; a burner suitable for the calorific value of the gas and having a bore of 3/8-inch and a length of 4 inches above the primary air inlets; a 20-degree angle block for supporting the burner; a flame gauge to determine the height of the inner blue cone and the overall height of the flame; a supply of ordinary gas at normal pressure (range approximately from 3–5 inches of water); a watch or clock with a hand which makes one complete revolution each minute; and flame indicators consisting of strips of gummed Kraft paper (60 pound stock), 5 mils in nominal thickness and 1/2-inch in width.

4.4.3.2 BOTTOM SHIELD TEST REQUIREMENTS

A bottom shield of non-metallic material, when tested as specified in 4.4.3.2.1, shall not convey flame or continue to flame longer than 60 seconds following any of five 15-second applications of the test flame. The period between applications shall be 15 seconds. A specimen is considered to have conveyed flame if more than 25% of the extended portion of the indicator is burned.

4.4.3.2.1 Bottom Shield Test Procedure

The test shall be conducted in a room or enclosure from which all drafts of air are excluded. A steel rod 18 inches long and 0.375 inches (9.5 mm) in diameter shall be supported. A 36 inch length of material having an approximate width of 3/4 inches shall be secured by overlapping the first turn of material to the rod held in a horizontal position. A weight exerting a force of 2 pounds (8N) shall then be attached to the free end of the material to provide tension. After 1 minute, under tension, the rod shall be slowly rotated, and the fixture tilted so that the material wraps with an overlap equal to one-half the width of the material. After the wrapping has been completed, the lower end of the material shall be secured and the remaining length of material shall be cut off. A second wrapping shall be similarly applied with the direction of the advance of the turns of the material reversed from that of the first wrapping. Finally, a third wrapping of material shall be similarly applied with the direction of advance opposite to that of the second wrapping. This gives six thicknesses of material at each point along the wrapped mandrel. The specimen shall be held in a vertical position by the support

Copyright National Electrical Manufacturers Association
Provided by IHS under license with NEMA
No reproduction or networking permitted without license from IHS
Not for Resale

provided within the test chamber. A flame indicator shall be so applied to the specimen so that the lower edge is 10 inches above the point at which the inner blue cone of the flame is to be applied. The indicator shall be wrapped once around the specimen and the ends pasted evenly together and projecting ¾-inch away from the specimen. The height of the test flame, with the burner vertical, shall be adjusted to 5 inches, with an inner blue cone 1½ inches high. The burner shall then be tilted to an angle of 20 degrees from vertical and the tip of the inner blue cone of the test flame shall be applied to the specimen at a point approximately 6 inches above its lower end. In this position, the test flame shall be directed against the specimen for a period of 15 seconds, then removed for 15 seconds. This cycle shall be repeated until five applications of the test flame have been made. Following the final application of the flame, the length of time to extinction shall be measured (see Figure 4-2).

4.4.3.3 TYPE FCC CABLE

4.4.3.3.1 Horizontal Test Requirements

Type FCC cable when tested as specified in 4.4.3.3.2 shall not convey flame or continue to flame longer than 60 seconds following the 30 second application of the test flame. A specimen is considered to have conveyed flame if flaming of the sample progresses beyond either or both of the 2 inch indicators.

4.4.3.3.2 Horizontal Test Procedure

The test shall be conducted in a room or enclosure from which all drafts of air are excluded. A 10 inch long specimen shall be secured with its longitudinal axis horizontal in the center of the enclosure. The sample supports shall be 8 inches apart, and three metal rods or equivalent permanent means whose free ends are not closer than ¾-inch to the specimen, shall be used to indicate three points on the specimen—the point midway between the specimen supports and points 2 inches to each side of the specimen midpoint. The height of the test flame, with the burner vertical, shall be adjusted to 5 inches, with an inner blue cone 1½ inches high. The burner shall then be tilted to an angle of 20 degrees from vertical and the tip of the inner blue cone of the test flame shall be applied to the center of one of the central conductors of the specimen (see Figure 4-3).

4.4.3.3.3 Vertical Test Requirements

The insulation on the Type FCC cable shall be such that it will not convey flame or continue to burn for more than 1 minute after five 15-second applications of a standard test flame, the period between applications of such flame being 15 seconds when specified according to the method in 4.4.3.4.2. A specimen is considered to have conveyed flame if more than 25% of the extended portion of the indicator is burned or if flaming of the sample continues longer than 60 seconds.

4.4.3.3.4 Vertical Test Procedure

The test shall be conducted in a room or enclosure from which all drafts of air are excluded. A 24-inch long specimen shall be held in a vertical position by the support provided within the test shield. A flame indicator shall be so applied to the specimen that the lower edge is 10 inches above the point at which the inner blue cone of the flame is to be applied. The indicator shall be wrapped once around the specimen with the gummed side toward the conductor and the ends pasted evenly together and projecting ¾-inch away from the wire on the back side of the wire. The height of the test flame, with the burner vertical, shall be adjusted to 5 inches, with an inner blue cone 1½ inches high. The burner shall then be tilted to an angle of 20 degrees from vertical and the tip of the inner blue cone of the test flame shall be applied to the center of one of the central conductors of the specimen at a point approximately 6 inches above its lower end. In this position, the test flame shall be directed against the specimen for a period of 15 seconds, then removed for 15 seconds. This cycle shall be repeated until five applications of the test flame have been made. Following the final application of the flame, the length of time to extinction shall be measured (see Figure 4-4).

4.4.4 Dielectric Withstand

The center 10 feet of a sample with a minimum length of 11 feet shall be immersed in tap water for 6 hours and while still immersed shall be capable of withstanding for a period of 1 minute, a voltage of 1500 VAC, 60 Hz applied at a rate not to exceed 500 volts per second. The test potential shall be applied between each insulated conductor(s) and all other conductors and ground (water). In all cases, the ends of the conductor of the specimen shall be spaced from the grounded electrode a sufficient distance to prevent flashover at the ends during application of the test potential.

4.4.4.1 APPARATUS

The apparatus shall be capable of supplying 1500 VAC, 60 Hz at a rate of 500 volts per second. The output capacity shall be sufficient to maintain 1500 VAC, 60 Hz across the specimen insulation for 1 minute under "no fault" conditions, and to actuate the fault indicator under "fault" conditions. A tank is needed in which the specimen shall be completely covered, except for the ends. A grounding electrode shall be immersed in the water and connected to the grounded side of the test potential apparatus.

Copyright National Electrical Manufacturers Association
Provided by IHS under license with NEMA
No reproduction or networking permitted without license from IHS

Not for Resale

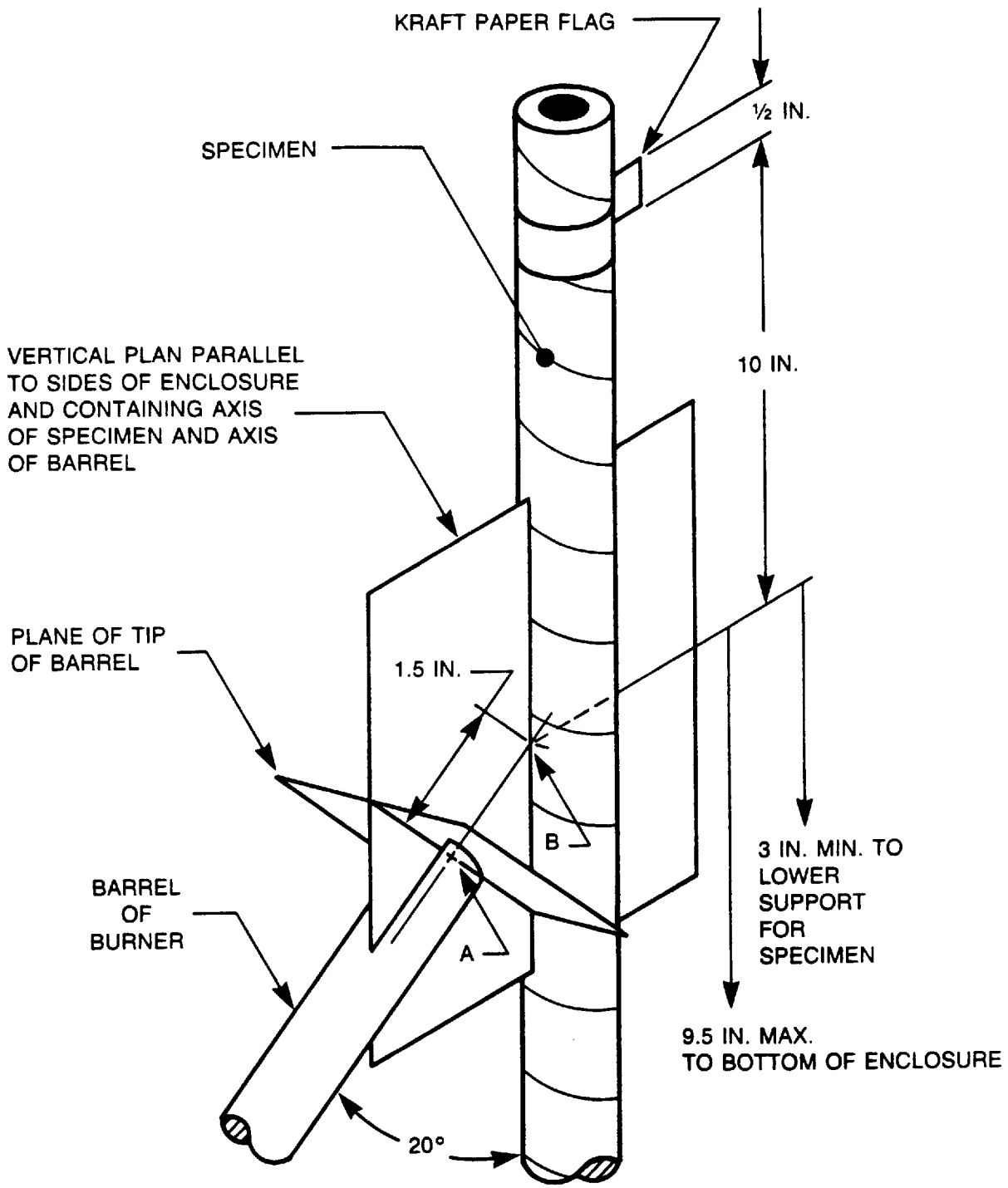

Figure 4-2
BOTTOM SHIELD FLAME TEST

Copyright National Electrical Manufacturers Association
Provided by IHS under license with NEMA
No reproduction or networking permitted without license from IHS
Not for Resale

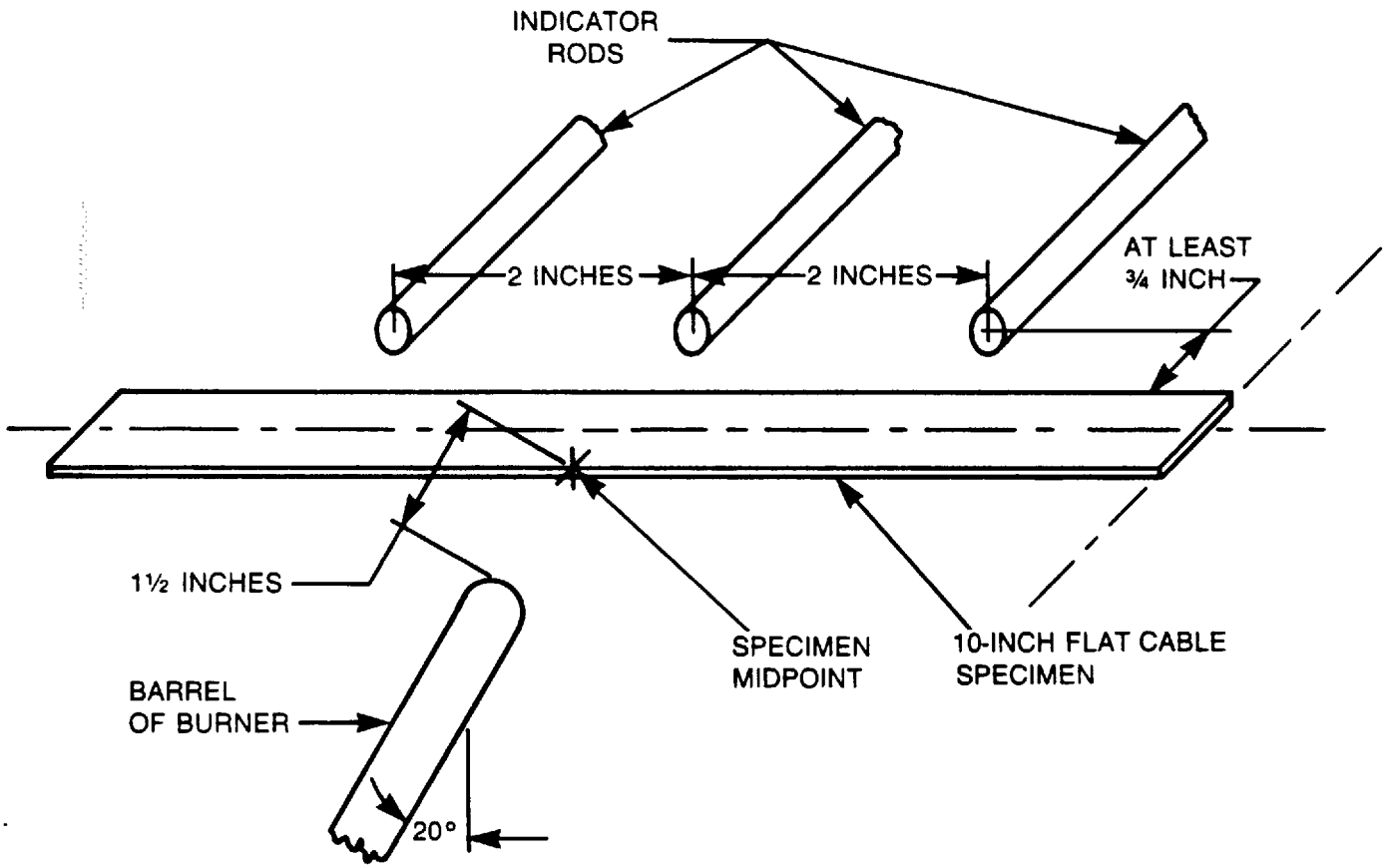

Figure 4-3
HORIZONTAL FLAME TEST

Copyright National Electrical Manufacturers Association
Provided by IHS under license with NEMA
No reproduction or networking permitted without license from IHS
Not for Resale

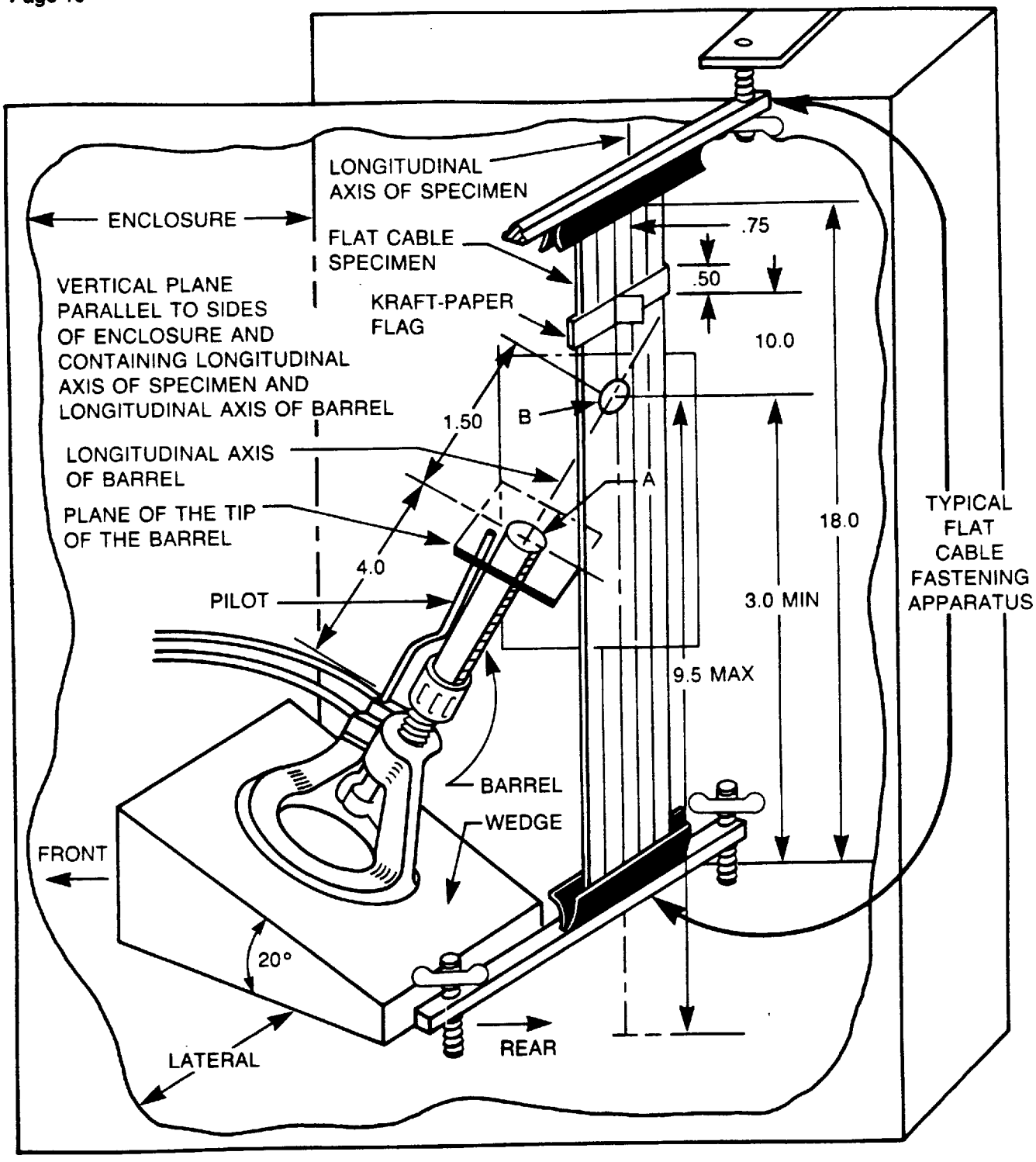

Figure 4-4
VERTICAL FLAME TEST

Copyright National Electrical Manufacturers Association
Provided by IHS under license with NEMA
No reproduction or networking permitted without license from IHS
Not for Resale

4.4.4.2 TEMPERATURE

The test shall be conducted with the water at any convenient temperature.

4.4.5 Insulation Resistance at 15.6°C

The insulated conductors, when tested for insulation resistance immediately following the dielectric withstand test specified in 4.4.4.1 and while still immersed, shall have an insulation resistance of not less than 200 megohms based on 1000 feet when tested in tap water at 15.6° ±1°C.

4.4.5.1 APPARATUS

The following apparatus shall be used.

a. A suitable tank shall be capable of maintaining the water within the required temperature range. The tank, if metal, shall be grounded or, if non-metallic, shall contain a grounded electrode.

b. Where a galvanometer method is used, a sensitive galvanometer, a constant potential source of 100–500 volts dc (open circuit), a standard resistance, and necessary shunts, all connected as illustrated in Figure 4-5, are required. The instruments shall be mounted so that they will be reasonably free from vibration and will not be affected adversely by local conditions. The means for indicating the degree of deflection shall be such as to produce a sharply outlined indicator on the scale and the deflection shall be not less than 6 inches, measured from zero, when the variable shunt has been set to determine the constant of the galvanometer (if the constant is of the order of 50,000). The resistance and shunts shall be calibrated.

c. A megohmeter shall be permitted to be used which is suitable for indicating the insulation resistance directly when a dc potential of 100–500 volts has been impressed on the insulation for 3 minutes.

4.4.5.2 PREPARATION FOR TEST

The preparation of the cable for IR testing shall be the same as for dielectric withstand testing as outlined in 4.4.4 and, in the case of IR at 15.6°C, the test will normally be carried out immediately following the dielectric withstand test. The IR test shall be carried out with a water temperature of 15.6° ± 1°C for at least 30 minutes prior to testing.

4.4.5.3 DETERMINATION USING GALVANOMETER METHOD

The insulated conductor under test, conditioned as outlined in 4.4.5.1, shall be connected to switch SW2, together with the tank electrode or metallic cable covering and/or other conductors and the galvanometer circuit, as shown in Figure 4-5. The following procedure shall be followed.

a. The galvanometer constant K shall be determined by taking a galvanometer deflection reading d_k when SW2 is connected C to A and SW1 is closed where:

$K = rd_k$ (to be not less than 50,000)

r = standard resistance in megohms

d_k = scale deflection × shunt multiplier

IR = Insulation Resistance (megohms at 1000 feet)

b. The circuit leakage deflection d (including the shunt multiplier) shall be determined with SW2 in the neutral position and SW1 closed.

c. Deflection D (including the shunt multiplier) shall be determined with SW2 connected C to B and SW1 closed and shall be read after the specimen has been electrified for 1 minute, except that, in the case of a single small coil, the reading can be taken at the end of 15 seconds, if at that time the deflection is small and is decreasing.

d. The 1,000 foot IR shall be calculated as follows.

$$IR = \frac{KL}{1{,}000\,(D - d)}$$

Where:

L = length of test specimen in feet

4.4.5.4 DETERMINATION USING MEGOHMETER METHOD

The test specimen shall be conditioned as outlined in 4.4.5.2 and connected, and the measurement shall be made in accordance with the instrument manufacturer's instructions. The IR of the specimen shall be read after a 3 minute

Copyright National Electrical Manufacturers Association
Provided by IHS under license with NEMA
No reproduction or networking permitted without license from IHS

Not for Resale

application of a dc potential of 100–500 volts, between conductor under test, and ground.

The 1,000 foot IR shall be calculated as follows.

$$IR = \frac{LR_s}{1{,}000}$$

Where:

L = length of test specimen in feet

R_s = measured insulation resistance of the test specimen.

4.4.6 Overload Current

Three-conductor No. 12 or No. 10 AWG Type FCC cable shall be capable of withstanding, for a period of 1 minute, the application of an alternating voltage of 1500 VAC, after having been subjected to minimum currents of 35 amperes for No. 12 AWG and 53 amperes for No. 10 AWG for a period of 15 minutes while the Type FCC system is installed under carpet squares in accordance with the manufacturer's recommendation on an ¾-inch floor of unsanded plywood. The voltage shall be applied between the insulated conductors and the grounding conductor connected to the top shield while the cable is still in the test position and has been allowed to cool for at least 12 hours.

4.4.7 Spark

Finished Type FCC cable shall be capable of withstanding a spark test at 3000 VAC using the apparatus and according to the method in 4.4.7.1 and 4.4.7.2.

4.4.7.1 APPARATUS

The spark test equipment shall include the following components.

a. A transformer, having one side of its high potential winding grounded and capable of supplying the necessary ac (rms) test potential when the wire or cable undergoing test is passing through the electrode.

b. An electrode which shall make intimate contact with all surfaces of the cable. Brush electrodes shall be used.

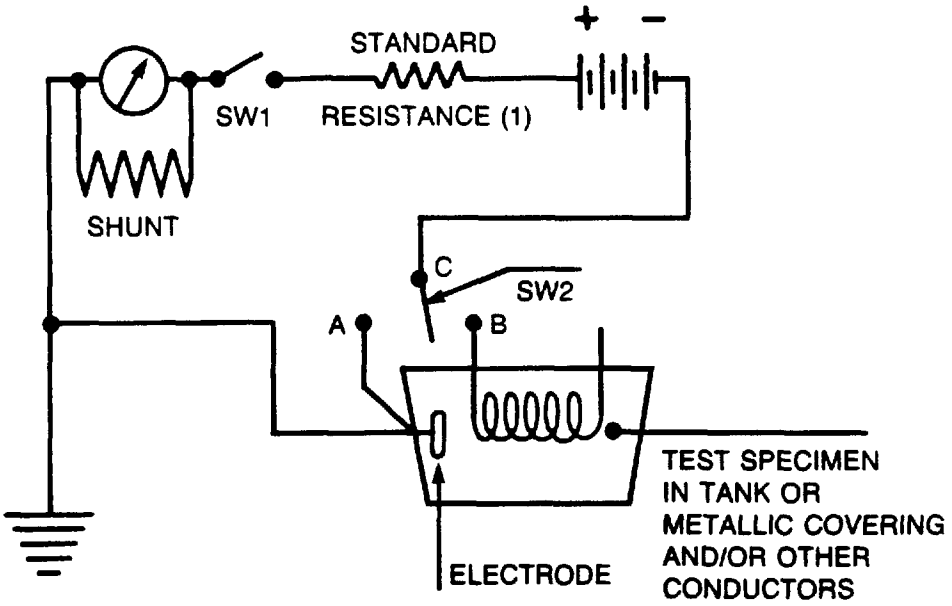

Figure 4-5
GALVANOMETER TEST CIRCUIT

Copyright National Electrical Manufacturers Association
Provided by IHS under license with NEMA
No reproduction or networking permitted without license from IHS
Not for Resale

c. A voltmeter, located in the circuit to indicate the potential being applied to the specimen at any time during the test. The voltmeter shall be mounted in such a manner that it is clearly visible to the operator when the spark test operation is being performed.

d. A device for signaling a fault in the specimen and, in addition, a device for recording specimen faults or for stopping the process upon occurrence of a fault. The signal shall be such that it will continue to function until manually reset.

4.4.7.2 PROCEDURE

Both ends of the specimen shall be solidly grounded unless the conductor has been previously checked and found to be continuous and then only one end need be solidly grounded. The specified voltage shall be applied between the electrode and ground. The specimen shall be moved through the electrode at such a rate of speed that each point on the wire or cable shall be in contact with the electrode for not less than 18 positive and negative crests of the supply voltage.

For convenience in checking, the maximum acceptable speed of the wire may be determined by the following: feet per minute = 5/9 × frequency in hertz × electrode length in inches.

4.4.8 Impact Test

A 2-foot length of Type FCC cable shall be conditioned at 100 ±1°C in a circulating air oven for 7 days. After conditioning, the cable shall be allowed to cool to 25 ± 5°C. Each conductor in the cable shall then be subjected to the impact of a freely falling, flat-bottomed, 3 pound weight with the diameter of one inch. The weight shall be dropped from a distance of 16 inches onto the cable which is laid falt on a flat wooden block. The cable will be examined for cracks and then be subjected to wet dielectric withstand test as specified in 4.4.4.

4.5 TYPE FCC UNDERCARPET WIRING SYSTEM TEST

4.5.1 Requirement

When installed or relocated in accordance with the manufacturer's instructions, the Type FCC undercarpet wiring system shall meet the tests in 4.5.2 through 4.10.

4.5.2 Electrical Heating Test Program

4.5.2.1 GENERAL

These tests shall be conducted in a room that is maintained at an ambient temperature of 25° ± 5°C and that is relatively free of air currents.

4.5.2.2 TEST SEQUENCE

These tests shall be conducted as part of the electrical heating test program and shall be performed in the following sequence.

a. Temperature test
b. Static heating test
c. Heat cycling — 150 ±20 cycles
d. Abuse — Mechanical (wood and concrete assemblies) or Electrical (wood assembly only)
e. Heat cycling — 150th ± 20 cycles to 350th ± 20 cycles
f. Abuse — Mechanical (wood and concrete assemblies) or Electrical (wood assembly only)
g. Heat cycling — through 500 cycles
h. Static heating test

4.5.2.3 SELECTION AND PREPARATION OF TEST ASSEMBLIES

The following test assemblies shall be assembled and prepared in accordance with the manufacturer's installation instructions.

a. One test assembly, consisting of Type FCC cable assemblies and, if applicable, at least one fold, one tap, one splice, and one transition assembly, shall be assembled on a smooth, continuous, concrete test base.

b. A second test assembly, consisting of Type FCC cable assemblies and at least one fold, one tap, one splice, and one transition assembly, shall be assembled on a test floor constructed of 2 × 4 inch joists placed on 16 inch centers and face boards covered with 3/4-inch unsanded plywood.

Both assemblies shall be electrically connected (see Figure 4-6) in order to form a continuous single-phase loop connection and shall be covered with carpet squares.

4.6 TEMPERATURE RISE

When subjected to the temperature test in 4.5.2, assemblies shall reach a stabilization temperature within 3 hours without exceeding a 30°C temperature rise above the ambient.

The test assemblies shall be subjected to a test current of 100% of rated current at a voltage not exceeding rated voltage until the temperature has stabilized. An assembly shall be considered to have attained a stable temperature when three temperature readings, taken at not less than 10 minute intervals, show no more than 2°C variation between any two of the readings.

Copyright National Electrical Manufacturers Association
Provided by IHS under license with NEMA
No reproduction or networking permitted without license from IHS

Not for Resale

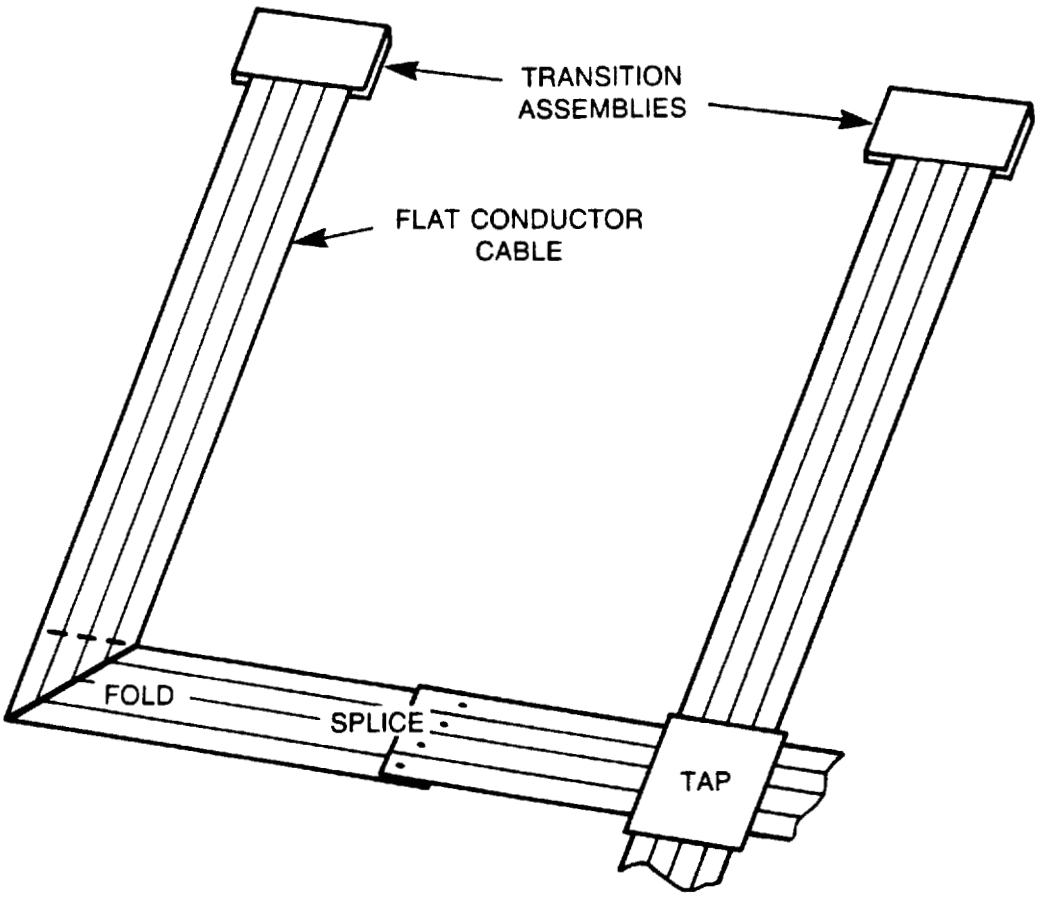

Figure 4-6
ELECTRICAL HEATING TEST ASSEMBLY

Copyright National Electrical Manufacturers Association
Provided by IHS under license with NEMA
No reproduction or networking permitted without license from IHS
Not for Resale

4.7 STATIC HEATING

When subjected to the static heating test in 4.5.2, assemblies shall reach a stabilization temperature within 3 hours without exceeding a 50°C temperature rise above the ambient temperature.

The test assemblies shall be subjected to a test current of 125% of rated current at a voltage not exceeding rated voltage until the temperature has stabilized. An assembly shall be considered to have attained a stable temperature when three temperature readings, taken at not less than 10 minute intervals, show no more that a 2°C variation between any two of the readings.

4.8 HEAT CYCLING WITH MECHANICAL ABUSE AND ELECTRICAL ABUSE

4.8.1 Test Assemblies

The test assemblies must be prepared as described in 4.5.2.3. The test assemblies shall complete 500 cycles of equal current-on and current-off operation for a period of one hour each while carrying the test current of 175% of rated current at a voltage not exceeding rated voltage. Temperatures are to be measured and recorded for at least every 25 cycles. The connector temperatures are to be measured no sooner than the last 5 minutes of the normal current-on time. The measurements are taken at approximately 25, 50, 75, 100, 150, 175, 225, 275, 350, 425 and 500 cycles ± 20 cycles each.

At the 150th ±20 cycles and 350th ± 20 cycles, the test sequence shall be interrupted in order to perform the mechanical stress tests on the concrete mounted test assembly and the mechanical stress, electrical stress test combination on the wood mounted test assembly.

During the mechanical abuse test, the de-energized test assembly shall be subjected to a load of 300 pounds mounted on 9 ball casters or equivalent, 6 inches apart in an array of a 3 × 3 square pattern. The casters shall conform to industry standard 100 pound requirements. This load shall be reciprocated back and forth on each splice, tap assembly, and fold 100 times at each of 4 lines of travel including the main axis of the test assembly, each 45 degrees apart (see Figure 4-7).

The stroke length shall be sufficient to cause all of the caster wheels of the platform to travel at least 6 inches beyond any point on the splice, tap or fold assembly under test.

Following the mechanical abuse test, the test assembly mounted on the wood platform shall be subjected to an electrical stress test consisting of a single limited short-circuit current test.

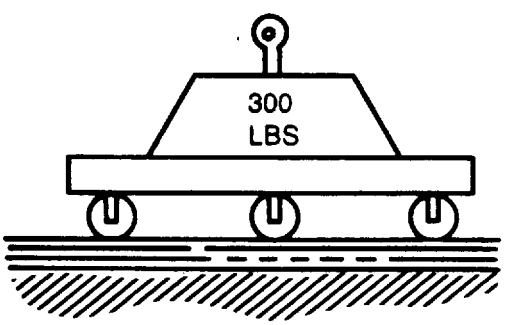

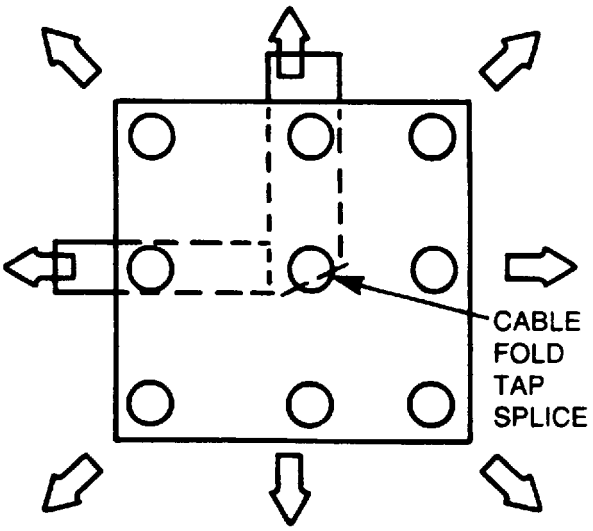

Figure 4-7
MECHANICAL ABUSE TEST

Copyright National Electrical Manufacturers Association
Provided by IHS under license with NEMA
No reproduction or networking permitted without license from IHS
Not for Resale

The series connected conductors of the test assembly shall be connected to a nominal 120 volt AC branch circuit through a 20 A, Type S, dual element type plug fuse. The No. 12 AWG copper wire branch circuit shall originate at a thermal/magnetic, non-adjustable trip circuit breaker located approximately 20 feet from the test room receptacle that it feeds. The test assembly shall be connected to the receptacle via approximately 10 foot lengths of No. 12 AWG copper conductor. The configuration results in an approximately 60 foot length of No. 12 AWG copper conductor being connected between the test assembly and the branch circuit breaker.

The impedance of the interconnecting wiring, the receptacle, and the attachment plug cap are unknown. However, by use of a stored display, high speed oscilloscope and appropriate calibrated shunts, the maximum fault current can be determined. This fault current shall be approximately 640 A peak and shall persist for approximately one electrical cycle before the fuse clears the fault.

4.8.2 Stability Factor

The stability factor, S, for each of the 11 temperature measurements mentioned in 4.8.1 is to be determined by subtracting algebraically the average temperature deviation, d, from the value of the temperature deviation for that temperature measurement. The deviation for the 11 individual temperature measurements is to be determined by subtracting the associated control-conductor temperature from the connector temperature. The value for d is a positive number when the connector temperature is more than that of the control conductor and a negative number when the connector temperature is less than that of the control conductor. The average of the 11 temperature deviations is then to be determined.

When subjecting the tests assemblies as described in 4.5.2.3, to heat cycle with mechanical and electrical stress as described in 4.8.1, the stability factor, S, as described in 4.8.2 shall not exceed ±10.

4.9 MATERIAL COMPATIBILITY AND DEGRADATION TESTS

4.9.1 Test Assemblies

There shall be no dielectric breakdown when separate test assemblies constructed as follows are subjected to the tests in 4.4.4. The test assembly shall consist of Type FCC cable, insulated tap, splice, and end assemblies, if applicable.

4.9.2 Unaged Test

The test assemblies shall be submerged for 1 hour in a tank containing approximately 4 inches of tap water at room temperature. The test shall be performed in accordance with 4.4.4.

4.9.3 Dry Aging Test

Test assemblies shall be conditioned at 100 ± 1°C in a circulating air oven for 7 days. After conditioning, the assemblies shall be allowed to cool to 25 ± 5°C. The assembly shall then be subjected to two folding cycles in an area away from the insulated tap or splice.

The folding cycle shall consist of hand folding the cable at a right angle (45 degree fold across the cable) and placing it between the plates of a hydraulic press. A 1-inch wide steel separator or shim with a thickness of 10 ±2 mils greater than three times the thickness of the cable shall be placed in the press parallel to but not touching the fold and the plates shall be pressed with a load of 5000 pounds. After a period of 15 minutes the cable shall be straightened.

After the second cycle there shall be no evidence of insulation separation, splitting, or cracking when viewed under 3× magnification. The entire assembly will then be subjected to a wet dielectric withstand test as specified in 4.4.4.

4.9.4 Damp Aging Test

Test assemblies shall be subjected to 32° ± 1°C and a relative humidity of 85% + 5%, – 0% for 14 days. After aging, the assemblies shall be allowed to cool to room temperature and then be subjected to a wet dielectric withstand test as specified in 4.4.4 after immersion for 1 hour.

4.10 FAULT PENETRATION

After penetration in the test described below, the fuse shall de-energize the circuit.

A Type FCC undercarpet wiring system consisting of Type FCC cable, top shield, bottom shield, carpet squares, and sufficient folds to conduct the test, shall be installed in accordance with the manufacturer's instructions on a floor of plywood sheathing (see 4.5.2.3.b). The test circuit shall be connected to a three phase (120/208 minimum to 138/240 maximum) supply with a minimum of 1000 A rms symmetrical fault current (line-ground) available at the Type FCC transition connections. Each phase shall be fused with a Class K fuse (20 A for #12 AWG and 30 A for #10 AWG conductors). All metallic shields shall be grounded to provide a minimum of 120 VAC from any phase conductor to the top shield.

After completion of the 1000 A test sequence, an impedance shall be inserted into the circuit so as to limit the available current to 100 A rms and the test shall be repeated.

The Type FCC undercarpet wiring system shall be penetrated at different points in the cable (including the fold) with the various objects described in Table 4-3.

Copyright National Electrical Manufacturers Association
Provided by IHS under license with NEMA
No reproduction or networking permitted without license from IHS
Not for Resale

The test sequence shall be composed of three separate trials of each object penetrating the energized cable at both 100 ± 25 A and 1000 ±100 A. The sequence shall be run with the penetration into an energized cable and into a non-energized cable that is then energized.

One additional trial for each condition shall be performed at a fold, taking care to penetrate 2 phase conductors.

4.11 GROUND FAULT TEST

4.11.1 Connections

All bonding or grounding connections of a Type FCC undercarpet wiring system shall be considered to have met this test if the connections or the ground will take a second application of 470 A for 4 seconds for No. 12 AWG (750 A for 4 seconds for No. 10 AWG). All bonding connections shall be tested individually or as a series connected system.

NOTE: This test is not intended for receptacles and adaptor assemblies since these are addressed in other standards.

A test assembly of a Type FCC undercarpet wiring system set up and tested as described in 4.5.2.3 shall be considered to meet this test if it will take the second application of 470 A for 4 seconds for No. 12 AWG (750 A for 4 seconds for No. 10 AWG) and the carpet shall not be ignited.

4.11.2 Specimen

A test assembly of Type FCC undercarpet wiring system, having a length of up to 10 feet, shall be installed in accordance with the manufacturer's instructions. The system shall have a fold, a splice, and two transition blocks, if applicable. The Type FCC cable shall have No. 12 AWG or No. 10 AWG conductors.

4.11.3 Procedure

The test shall consist of an application of 470 A for 4 seconds, allowing the system to return to ambient room temperature, and then subjecting the system to another application of 470 A for 4 seconds (750 A for 4 seconds for No. 10 AWG).

Table 4-3
PENETRATING OBJECTS

Object	Approximate Diameter	Material	Finish	Other Characteristics
3P (three penny finishing nail)	0.042 inch	Steel	Smooth, unplated	Relatively sharp point with minimal forming flash
16P (sixteen penny common nail)	0.130 inch	Steel	Rough, with lateral grooving, unplated	Relatively blunt point with considerable forming flash

Copyright National Electrical Manufacturers Association
Provided by IHS under license with NEMA
No reproduction or networking permitted without license from IHS
Not for Resale

SECTION 5
MARKING

5.1 TRANSITION ASSEMBLIES, INSULATORS, FITTINGS, AND DEVICES

Transition assemblies, fittings, insulators, and devices shall have the manufacturer's name, trademark, or other acceptable symbol of identification and the Catalog/Part Number, or size, or both, if practical, plainly and durably marked on them. The cartons in which these parts are packed shall have the Catalog/Part Number marked on them, the designation "Type FCC," and the designation of the system with which it is to be used.

5.2 TOP SHIELD

The Top Shield of a Type FCC Assembly shall be marked, at intervals not exceeding 2 linear feet, with the following information.

a. The manufacturer's name, trademark, or symbol

b. The manufacturer's catalog or part number

c. The following warning message (or its equivalent):

WARNING: DE-ENERGIZE THIS ELECTRICAL SYSTEM PRIOR TO REMOVING THIS SHIELD. WORK ON THIS SYSTEM SHALL BE PERFORMED ONLY BY A QUALIFIED ELECTRICIAN

5.3 CABLE (TYPE FCC) MARKING

The cable shall be marked to differentiate the conductors. All identification shall be durable and legible. All identification shall appear on both sides of the cable, and shall meet all requirements of the applicable regulatory agencies. See Table 5-1 for color coding.

5.4 TAG, REEL, AND CARTON MARKING

The smallest unit package shall be marked with the following information.

a. Flat Conductor Cable, Type FCC, 300 Volts

b. Designation: (system use)

c. Length in feet

d. Date of manufacture or acceptable code

e. Name of manufacturer

f. Conductor size

g. Number of conductors

h. Catalog/Part Number

5.5 OPTIONAL MARKINGS

Other markings that do not conflict with the foregoing shall also be permitted.

5.6 INSTRUCTIONS FOR INSTALLATION

Instructions for site preparation and installation of Type FCC systems shall be provided.

Table 5-1
Color Coding

Conductor Function	Color	Symbol (Optional)
Neutral	White	Star
Grounding	Green	Triangle
Phase	Black	Square
Phase	Red	Hexagon
Phase	Blue	Circle
Isolated Ground	Green with Yellow	.....

Previous page is blank

Copyright National Electrical Manufacturers Association
Provided by IHS under license with NEMA
No reproduction or networking permitted without license from IHS
Not for Resale

NEMA STANDARDIZIATION BACKGROUND

The purpose of NEMA standards, their classification, and status are set forth in certain clauses of the NEMA *Standardization Policies and Procedures* manual and are referenced below:

Purpose of Standards

National Electrical Manufacturers Association Standards are adopted in the public interest and are designed to eliminate misunderstandings between the manufacturer and the purchaser and to assist the purchaser in selecting and obtaining the proper product for their particular needs. Existence of a National Electrical Manufacturers Association Standard does not in any respect preclude any member or nonmember from manufacturing or selling products not conforming to the standard.

Definition of a Standard

A standard of the National Electrical Manufacturers Association defines a product, process, or procedure with reference to one or more of the following: nomenclature, composition, dimensions, tolerances, safety, operating characteristics, performance, rating, testing, and the service for which they are designed.

(Standardization Policies and Procedures, p. 1)

Dimensions

Where dimensions are given for interchangeability purposes, alternate dimensions satisfying the other provisions of the Standards Publication may be capable of otherwise equivalent performance.

(Standardization Policies and Procedures, p. 6)

Categories of Standards

National Electrical Manufacturers Association Standards are of three classes, which have received the affirmative vote of at least two-thirds of the Subdivision votes cast in the affirmative or negative:

1. NEMA Standard, which relates to a product, process, or procedure commercially standardized and subject to repetitive manufacture.
2. Suggested Standard for Future Design, which may not have been regularly applied to a commercial product, but which suggests a sound engineering approach to future development.
3. Adoptive Standard, which is adopted in whole or in part from the standards of another organization, either domestic, regional, or international.

(Standardization Policies and Procedures, pp. 5)

Authorized Engineering Information

Authorized Engineering Information consists of explanatory data and other engineering information of an informative character not falling within the classification of NEMA Standard or Suggested Standard for Future Design, which standard has received the affirmative vote of at least two-thirds of the Subdivision votes cast in the affirmative or negative.

(Standardization Policies and Procedures, pp. 5)

Identification of Status

Standards in NEMA Standards Publications are identified as "NEMA Standard," "Suggested Standard for Future Design," or "Adoptive Standard." These indicate the status of the standard. A statement incorporating the auxiliary verb "shall" indicates that compliance with a requirement is mandatory for compliance with the standard. These classes of standards are identified in the foreword or throughout the text.

The material identified as "Authorized Engineering Information" is designated similarly. Statements incorporating other auxiliary verbs such as "should," "may," etc. refer to the authorized engineering information and not to procedures required for compliance with the standard.

Copyright National Electrical Manufacturers Association
Provided by IHS under license with NEMA
No reproduction or networking permitted without license from IHS
Not for Resale

6470247 0512414 821

UNDERCARPET PREMISE WIRING SYSTEMS SECTION
OF THE
NATIONAL ELECTRICAL MANUFACTURES ASSOCIATION

MEMBER COMPANIES

AMP Incorporated
Harrisburg, PA 17105

Hubbell Incorporated
Wiring Device Division
Bridgeport, CT 06605

Thomas & Betts Corporation
Memphis, TN

Copyright National Electrical Manufacturers Association
Provided by IHS under license with NEMA
No reproduction or networking permitted without license from IHS
Not for Resale