TS 1-83 6470247 0004356 5

C-62-32

National Electrical Manufacturers Association
2101 L Street, N.W. Suite 300
Washington, D.C. 20037 (202) 457-8400

PROPOSED, NEW AND REVISED STANDARDS

TO ALL REPRESENTATIVES OF MEMBER COMPANIES
IN THE TRAFFIC CONTROL SYSTEMS SECTION

Subject: Revision No. **3** to the NEMA Standards Publication for *Traffic Control Systems*, NEMA Pub. No. **TS 1-1983**.

Dear Representative:

At its meeting on August 20, 1986, the NEMA Codes and Standards Committee approved the attached Section 15 of the subject publication which supersedes Sections 7 and 11. Please insert these pages into your copy of the book and delete Sections 7 and 11.

Also enclosed is a new front page to show that your book now contains Revision Nos. 1, 2, and 3, and a revised table of contents.

Please insert these pages carefully since extra copies are not available.

Sincerely yours,

Krystyna Bagnato

Krystyna Bagnato
Standards Publications Editor

Enc: Revision No. 3 to TS 1-1983
Copies to: All Known Holders of TS 1

Copyright National Electrical Manufacturers Association
Provided by IHS under license with NEMA
No reproduction or networking permitted without license from IHS
Not for Resale

TS 1-83 6470247 0004357 7
C-62-32

TS 1

TRAFFIC CONTROL SYSTEMS

Revision No. 1—July 1984
Revision No. 2—October 1985
Revision No. 3—August 1986

Published by

National Electrical Manufacturers Association
2101 L Street, N.W.
Washington, D.C. 20037

© 1987 by National Electrical Manufacturers Association

Copyright National Electrical Manufacturers Association
Provided by IHS under license with NEMA
No reproduction or networking permitted without license from IHS
Not for Resale

TABLE OF CONTENTS

		Page
Section 1	Definitions	1
Section 2	Environmental Standards and Test Procedures	12
Section 3	(Superseded by Sections 13 and 14, July 1984)	
Section 4	(Superseded by Sections 13 and 14, July 1984)	
Section 5	Solid-State Load Switches	41
Section 6	Conflict Monitors	45
Section 7	(Superseded by Section 15, August 1986)	
Section 8	Solid-State Flashers	68
Section 9	(Reserved)	
Section 10	Terminals and Facilities	70-a
Section 11	(Superseded by Section 15, August 1986)	
Section 12	(Reserved)	
Section 13	Interface Standards for Advanced Two-Phase through Eight-Phase Solid-State Traffic Controller Units	84
Section 14	Definitions and Physical and Functional Standards for Advanced Two-Phase through Eight-Phase Solid-State Traffic Signal Controller Units of the Vehicle-Activated Type	88
Section 15	Inductive Loop Detectors	102

Copyright National Electrical Manufacturers Association
Provided by IHS under license with NEMA
No reproduction or networking permitted without license from IHS
Not for Resale

Section 15

INDUCTIVE LOOP DETECTORS

Section 15 responds to the need for a series of vehicle loop detectors which provide inputs for traffic-actuated or traffic-response control, surveillance, or data collection systems. The inductive loop detector responds to the presence of vehicles on the roadway by relying upon the effect of the conductive mass of the vehicle on the alternating magnetic field of a loop. When a vehicle passes over the loop of wire embedded in the surface of the roadway, it reacts with the alternating magnetic field which is associated with that loop.

These standards cover the performance and design requirements of interchangeable inductive loop detector units. A detector unit used with a sensor loop embedded in the surface of a roadway detects vehicles moving or standing in the detection zone of the sensor loop. The output of the loop detector unit may be used directly to provide an input to a vehicle-actuated traffic controller unit or provide inputs to traffic-responsive control and surveillance systems. Loop detectors generate outputs indicative of vehicles passing through the sensor loop zone of detection. This output may be used for counting (volume) or for detecting presence time representative of the time that vehicles are in the sensor loop zone of detection (occupancy), or both.

Authorized Engineering Information 8-20-1986.

15.1 LOOP DETECTOR DEFINITIONS

15.1.1 Vehicle Detector System

A system for indicating the presence or passage of vehicles.

NEMA Standard 8-20-1986.

15.1.2 Loop Detector System

A vehicle detector system that senses a decrease in inductance of its sensor loop(s) during the passage or presence of a vehicle in the zone of detection of the sensor loop(s).

NEMA Standard 8-20-1986.

15.1.3 Sensor Loop

An electrical conductor arranged to encompass a portion of roadway to provide a zone of detection and designed such that the passage or presence of a vehicle in the zone causes a decrease in the inductance of the loop that can be sensed for detection purposes.

NEMA Standard 8-20-1986.

15.1.4 Zone of Detection

That area of the roadway within which a vehicle is detected by a vehicle detector system.

NEMA Standard 8-20-1986.

15.1.5 Loop Detector Unit

An electronic device which is capable of energizing the sensor loop(s), of monitoring the sensor loop(s) inductance and of responding to a predetermined decrease in inductance with an output which indicates the passage or presence of vehicles in the zone of detection.

NEMA Standard 8-20-1986.

15.1.6 Channel

Electronic circuitry which functions as a loop detector unit.

NEMA Standard 8-20-1986.

15.1.7 Lead-In Cable

The electrical cable which serves to connect the sensor loop(s) to the input of the loop detector unit.

NEMA Standard 8-20-1986.

15.1.8 Detector Mode

A term used to describe the duration and conditions of the occurrence of a detector output.

NEMA Standard 8-20-1986.

15.1.9 Crosstalk

The adverse interaction of any channel of a detector unit with any other detector channel.

NEMA Standard 8-20-1986.

Copyright National Electrical Manufacturers Association
Provided by IHS under license with NEMA
No reproduction or networking permitted without license from IHS
Not for Resale

15.2 FUNCTIONAL STANDARDS

15.2.1 Operation

The inductive loop vehicle detector unit defined and described in this standard shall respond to changes in the inductance of the sensor loop/lead-in combination(s) connected to its loop input terminals. It shall develop a detection output when there is a sufficiently large decrease in the magnitude of the connected inductance.

The sensor loop(s) connected to the detector unit input terminals shall be located at the intended zone(s) of detection. The sensor loop(s) shall be connected to the detector unit by means of lead-in cable.

The sensor loop(s) shall be so configured that the presence of a vehicle in each zone of detection causes a sufficient decrease in inductance to cause an output response from the detector unit.

NEMA Standard 8-20-1986.

15.2.2 Configurations and Dimensions

15.2.2.1 CONFIGURATIONS

This standard covers detector unit configurations shown in Table 15-1.

NEMA Standard 8-20-1986.

Table 15-1
DETECTOR UNIT TYPES

	Without Delay/Extension		With Delay/Extension	
Dectector Type	**Relay Output**	**Solid State Output**	**Relay Output**	**Solid State Output**
Shelf Mounted 10 Pin MS Connector(s)				
1 Channel	Type 1	Type 2	Type 1T	Type 2T
2 Channel	Type 3	Type 4	Type 3T	Type 4T
(Reserved)				
Card Rack				
2 Channel		Type 7		Type 7T
4 Channel		Type 8		Type 8T
Shelf Mounted 19 Pin MS Connector				
4 Channel	Type 9			

Each channel shall be provided with independent loop input terminals and shall deliver detection information on independent output terminals.

Copyright National Electrical Manufacturers Association
Provided by IHS under license with NEMA
No reproduction or networking permitted without license from IHS
Not for Resale

15.2.2.2 DIMENSIONS

1. Shelf mounted one-channel units shall be a maximum of 2.5″ W × 7″ H × 9″ D, including projections, but excluding the mating connector.
2. Shelf mounted two or four-channel units shall be a maximum of 3.5″ W × 7″ H × 9″ D, including projections, but excluding the mating connector.
3. Two-channel card rack units shall be 1.14″ max. W × 4.5″ H × 7.00″ D, excluding the handle as shown in Figure 15-1.
4. Four-channel card rack units shall be 2.31″ max. W × 4.5″ H × 7.00″ D, excluding the handle as shown in Figure 15-2.

NEMA Standard 8-20-1986.

15.2.3 Connectors

On shelf mounted units, all inputs and outputs, including power, shall enter the unit through a front panel connector. The connectors of shelf mounted units shall mate with the connectors specified in these standards.

NEMA Standard 8-20-1986.

15.2.4 Accessibility

The detector unit shall be easily disassembled to gain access for maintenance. When thus disassembled, the detector unit shall be operational for trouble shooting.

NEMA Standard 8-20-1986.

15.2.5 Material and Construction of Rigid Printed Circuit Assemblies

15.2.5.1 MATERIALS

All printed circuit boards shall be made from NEMA flame resistant Grade FR-4 laminates (glass-epoxy), or equivalent (see NEMA LI 1-1983, Industrial Laminated Thermosetting Products). Circuit boards exceeding two inches in any dimension shall be at least 1/16 inch nominal thickness. Circuit boards not exceeding two inches in any dimension shall be at least 1/32 inch nominal thickness.

15.2.5.2 CONDUCTORS

The walls of all plated-through holes shall have a minimum copper, or equivalent plating thickness of 0.001 inch. All circuit tracks shall have a conductivity equivalent to at least one ounce per square foot of copper. All electrical mating surfaces shall be made of noncorroding material.

15.2.5.3 COMPONENT IDENTIFICATION

The unit shall be designed so that each component is identified by a circuit reference symbol. This identification shall be affixed to the printed circuit board(s), the cover of the unit, or in an assembly drawing provided with the unit.

NEMA Standard 8-20-1986.

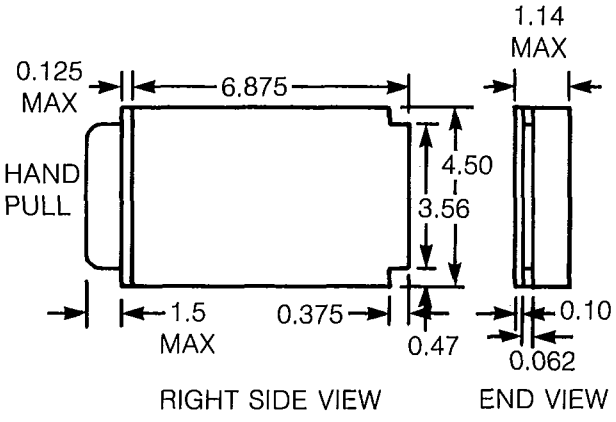

Not to scale
All dimensions in inches
± 0.020 Tolerance (where applicable)

Figure 15-1
TWO-CHANNEL CARD RACK UNIT

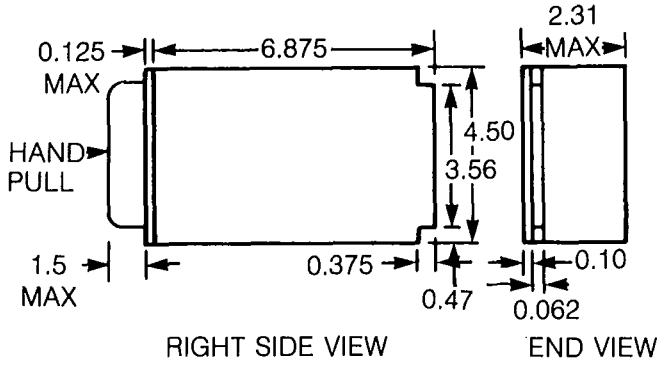

Not to Scale
All dimensions in inches
± 0.020 Tolerance (where applicable)

Figure 15-2
FOUR-CHANNEL CARD RACK UNIT

Copyright National Electrical Manufacturers Association
Provided by IHS under license with NEMA
No reproduction or networking permitted without license from IHS
Not for Resale

15.2.6 Environmental Requirements

Loop detector units shall operate in accordance with requirements listed herein under the following environmental conditions. The words "loop detector unit" shall be substituted for "controller assembly" where they appear for the purpose of this section.

15.2.6.1 Voltage, AC Powered Units

1. *Voltage Range*—The voltage range shall be in accordance with 2.1.2.
2. *Frequency Range*—The frequency range shall be in accordance with 2.1.3.

15.2.6.2 Voltage, DC Powered Units

1. *Voltage Range*—The voltage range shall be 24 VDC ± 2.5 VDC.
2. *Ripple*—The maximum supply ripple shall be 500 millivolts peak to peak.

15.2.6.3 AC Power Interruption

Two or more power interruptions which are separated by power restorations of 1500 milliseconds or more shall be considered as separate interruptions. The loop detector unit shall react to the power interruptions as follows:

1. Three interruptions of 20 milliseconds or less which are separated by power restorations of 300 milliseconds or more shall not cause the loop detector unit to revert to its start-up sequence.
2. The loop detector unit shall be permitted to revert to its start-up sequence following power interruptions longer than 20 milliseconds.

15.2.6.4 Temperature and Humidity

Temperature and humidity shall be in accordance with 2.1.5.

15.2.6.5 Transients, AC Powered Units

Loop detector units using 120 VAC 60 Hz input power shall meet the following requirements:

1. The detector unit shall withstand the high-repetition noise transients as described in 2.1.6.1.
2. The detector unit shall withstand the low-repetition, high-energy transients as described in 2.1.6.2.
3. The detector unit shall withstand the nondestructive transient as described in 2.1.8.

15.2.6.6 Transients, DC Powered Units

Loop detector units using 24 VDC input power shall operate normally when the test impulse described in 2.1.7 is applied as follows:

1. Between LOGIC GROUND and the +24 VDC power input. The test set-up shown in Figure 15-3 shall be used for this test.
2. Across the output terminals of each channel while in both the detect and non-detect condition.
3. Between LOGIC GROUND and the control inputs.

Detector loop inputs are specifically excluded from this test.

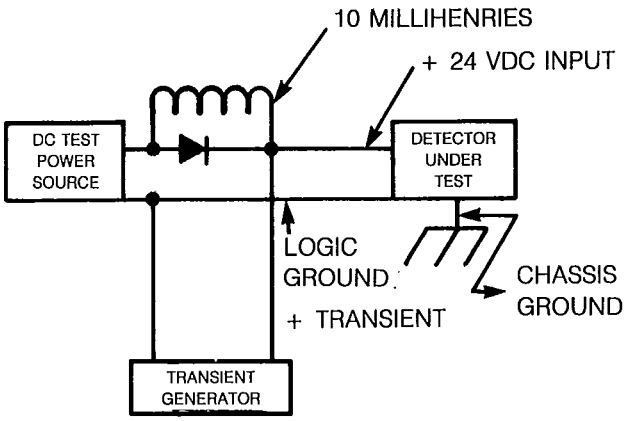

TEST CONDITIONS:

1. Transient generator is described in 2.1.7.
2. The input voltage shall be 24 ± 2.5 volts dc measured at the input terminal to the loop detector under test.
3. The dc power source must be capable of supplying at least 100 milliamperes per channel.
4. When testing for the reverse polarity transient, the diode shown shall be reversed.

Figure 15-3
TEST CONFIGURATION

15.2.6.7 Transients, Loop Detector Input Terminals

The detector shall be capable of withstanding the following two nondestructive transient tests:

1. The detector loop input terminals, with loop not connected, shall be subjected to the nondestruct transient immunity test described in 2.1.8, except that the amplitude shall be 200 volts ± 5 percent.
2. Each detector loop input terminal shall be subjected to one transient pulse of each polarity between the loop terminal and chassis ground with the other loop terminal ungrounded and repeated with the other terminal connected to chassis ground as shown in Figure 15-4.

Copyright National Electrical Manufacturers Association
Provided by IHS under license with NEMA
No reproduction or networking permitted without license from IHS
Not for Resale

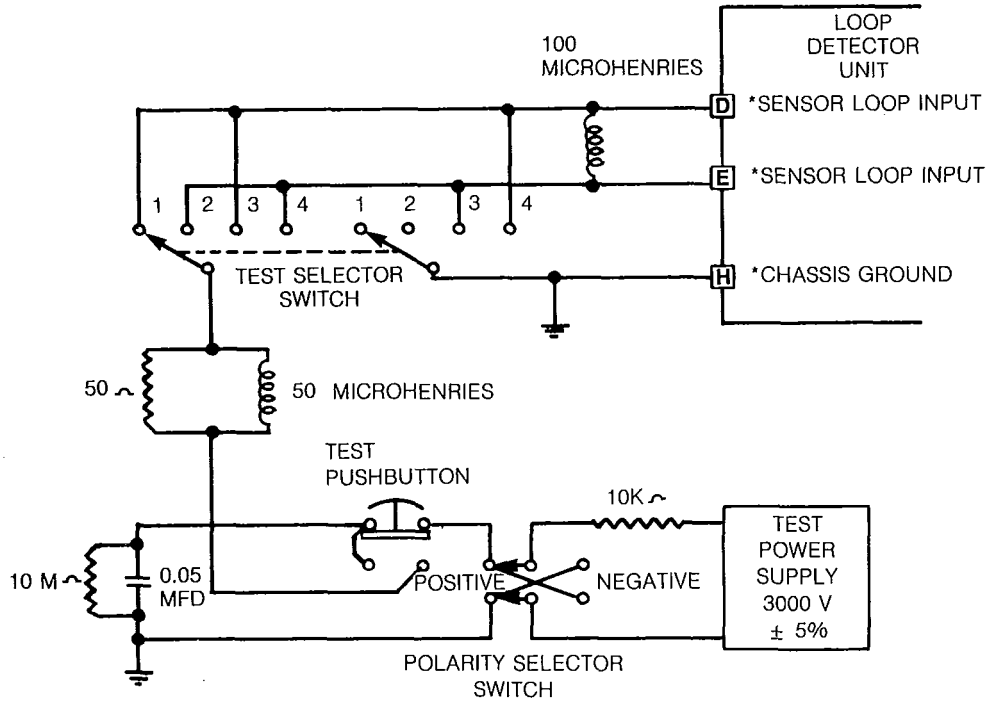

TRANSIENT TEST CONFIGURATIONS

TEST NUMBER	TEST SELECTOR POSITION	POLARITY SELECTOR	TESTED INPUTS*
1	1	POSITIVE	D TO H
2	2	POSITIVE	E TO H
3	3	POSITIVE	D TO E
4	4	POSITIVE	E TO D
5	1	NEGATIVE	D TO H
6	2	NEGATIVE	E TO H
7	3	NEGATIVE	D TO E
8	4	NEGATIVE	E TO D

*The pin designations shown are for a single channel detector. Similar tests shall be performed on all channels of a multichannel detector.

Figure 15-4
LOOP INPUT TERMINAL TRANSIENT TESTS

The eight conditions of the test shall be performed with the detector operating from its normal power source and with a 100 uH ± 10 percent coil connected across the loop terminals of each channel.

The energy source shall be a capacitor of .05 uF ± 5 percent connected in accordance with Figure 15-4.

The voltage on the capacitor shall be adjusted to 3000 volts, ± 5 percent.

The push button shall be activated for at least one second for each of the eight conditions.

Copyright National Electrical Manufacturers Association
Provided by IHS under license with NEMA
No reproduction or networking permitted without license from IHS
Not for Resale

15.2.6.8 VIBRATION

The loop detector unit shall maintain both its physical integrity and operating characteristics when subjected to the vibration test in 2.2.5. This test shall be run at nominal voltage and room environmental conditions.

15.2.6.9 SHOCK

The loop detector unit shall suffer neither permanent mechanical deformation nor any damage which renders it permanently inoperable when subjected to the shock test described in 2.2.6.

This test shall be run at room environmental conditions without power applied to the unit.

NEMA Standard 8-20-1986.

15.2.7 Power Inputs

15.2.7.1 AC+ (LINE SIDE)

The AC+ (line side) is the protected side of the 120 VAC 60 Hz power source. The steady state input current per channel shall not exceed 100 milliamperes rms.

15.2.7.2 AC– (COMMON)

The AC– (common) is the unfused and unswitched return side, neutral of the 120 VAC 60 Hz power source. This input shall not be connected to LOGIC GROUND or CHASSIS GROUND within the unit nor to the loop input terminals.

15.2.7.3 PLUS 24 VDC

This input supplies power for DC units and is the source of power for DC control inputs in AC powered units. The current consumption of DC powered units shall not exceed 100 milliamperes per channel. The +24 VDC current consumption of AC powered units shall not exceed 10 milliamperes per control input. The return for this input in DC powered units is LOGIC GROUND as described in 15.2.8 The only return for this input in AC powered units is the control input(s) as described in 15.2.10.1. This input shall not be connected within the unit to any loop input.

NEMA Standard 8-20-1986.

15.2.8 Logic Ground

This input is the return for the +24 VDC input on DC powered units. This point shall not be connected within the unit to AC– (common), or to CHASSIS GROUND, or to any loop input terminal.

NEMA Standard 8-20-1986.

15.2.9 Chassis Ground

The loop detector unit shall have a terminal for connection to the chassis of the unit. This input shall not be connected to LOGIC GROUND, AC– (common), or to any other point within the unit, except that it shall be permissible to use this input as a return for transient protection devices.

If the unit has a metallic case, the case shall be connected to a CHASSIS GROUND.

NEMA Standard 8-20-1986.

15.2.10 Control Inputs

15.2.10.1 DC CONTROL INPUTS

Control inputs shall have the following characteristics as measured from the negative side of the +24 VDC input supply:

NEMA Standard 8-20-1986.

The negative side of the +24 VDC input supply will normally be returned to LOGIC GROUND within the controller assembly. When the negative side of the +24 VDC input supply is returned to LOGIC GROUND, LOGIC GROUND is the reference point for the control inputs.

Authorized Engineering Information 8-20-1986.

15.2.10.1.1 "LOW" OR ACTIVE STATE

A voltage between 0 and 8 volts shall be considered the "low" or active state.

15.2.10.1.2 "HIGH" OR INACTIVE STATE

A voltage greater than 16 volts shall be considered the "high" or inactive state.

15.2.10.1.3 TRANSITION VOLTAGE ZONE OF INPUT CIRCUITRY

Transition zone of input circuitry from "low" state to "high" state and vice versa shall occur between 8 and 16 volts.

15.2.10.1.4 EXTERNAL TRANSITION TIME

External transition from "Low" state to "high" state and vice versa shall be accomplished within 0.1 millisecond.

15.2.10.1.5 MAXIMUM CURRENT

Over the voltage range 0 to 26 volts DC, maximum current "in" or "out" of any input control terminal shall be less than 10 milliamperes. The input circuitry shall be returned to +24 volt DC supply in such a manner

Copyright National Electrical Manufacturers Association
Provided by IHS under license with NEMA
No reproduction or networking permitted without license from IHS
Not for Resale

that the removal of all connections to the input shall allow the voltage at the input terminal to rise to the +24 supply voltage.

15.2.10.1.6 SIGNAL RECOGNITION

Any input signal dwelling in a defined logic state for less than 1.0 millisecond shall not be recognized. Any input signal dwelling in a defined logic state for more than 30 milliseconds shall be recognized. Successive similar logic state transitions shall not be recognized when occurring less than 10 milliseconds apart, and shall be recognized when occurring more than 135 milliseconds apart.

15.2.10.1.7 ACTIVATION OF DELAY/EXTENSION FEATURE

The application of a "low" state voltage to a DELAY/EXTENSION ENABLE input shall activate the delay/extension feature on the channel.

15.2.10.2 AC CONTROL INPUTS

Control inputs shall have the following characteristics as measured from the AC−(common) input of the unit:

15.2.10.2.1 "ON" OR ACTIVE VOLTAGE RANGE

Any voltage from 70 to 135 volts AC shall be considered the "on" or active state.

15.2.10.2.2 "OFF" OR INACTIVE VOLTAGE

Any voltage less than 15 volts AC shall be considered the "off" or inactive state.

15.2.10.2.3 INPUT CURRENT

The input current shall not exceed 50 milliamperes.

15.2.10.2.4 SIGNAL RECOGNITION

Any input signal dwelling in a defined logic state for less than 8.3 milliseconds shall not be recognized. Any input signal dwelling in a defined logic state for more than 333 milliseconds shall be recognized. Successive similar logic state transitions shall not be recognized when occurring less than 16.6 milliseconds apart, and shall be recognized when occurring more than 1 second apart.

15.2.10.2.5 APPLICATION OF AN "ON" STATE VOLTAGE TO A DELAY/EXTENSION INHIBIT INPUT

The application of an "on" state voltage to a DELAY/EXTENSION INHIBIT input shall deactivate the delay/extension feature on that unit or channel in the case of multiple channel units.

NEMA Standard 8-20-1986.

15.2.11 Loop/Lead-In Electrical Properties

Each channel of the detector unit shall function in accordance with the specific requirements of this standard and in addition shall operate without significant degradation with any sensor loop/lead-in combination which exhibits the following electrical properties as measured at the detector unit terminals of the lead-in:

1. Inductance at 50 KHz—50 to 700 microhenries.
2. Q at 50 KHz—greater than 5.
3. Resistance to earth ground—greater than 1 megohm.
4. Field installation practices or detector unit design may require grounding the shield of the loop lead-in cable. Such grounding should be in accordance with the detector manufacturer's recommendation. (The last two sentences have been approved as Authorized Engineering Information.)

NEMA Standard 8-20-1986.

15.2.12 Test Loop Configurations

Sensor loop and lead-in combinations used to verify the performance requirements of this standard shall consist of the following combinations of 6 ft. × 6 ft. (1.928m × 1.928m) three turn loops and shielded lead-in cable as illustrated in Figure 15-5.

1. Single-loop 6 ft. by 6 ft., three turns, with 100 ft. of lead-in (80-105 microhenries).
2. Single-loop 6 ft. by 6 ft., three turns, with 1,000 ft. of lead-in (260-320 microhenries).
3. Four loops 6 ft. by 6 ft., three turns, in a row in the direction of travel and separated by 9 feet, series/parallel connected with 250 ft. of lead-in (100-140 microhenries).

NEMA Standard 8-20-1986.

Copyright National Electrical Manufacturers Association
Provided by IHS under license with NEMA
No reproduction or networking permitted without license from IHS
Not for Resale

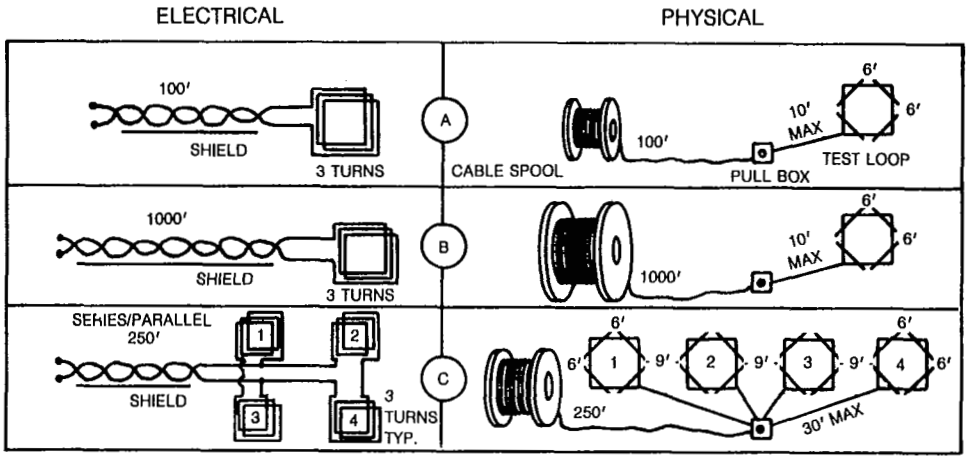

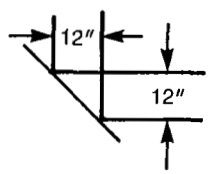

CHAMFER DETAIL

CONSTRUCTION—Loop dimension tolerances shall be ± 2 inches. Connections shall be soldered and waterproofed. Loops shall be installed in a nonreinforced pavement and located at least 3 feet (.914m) from any conductive material. Lead-in cable shall be spooled. Loop leads shall exit at one corner of the loop structures. All loop corners shall be chamfered 12 inches.

LOOP WIRE—Each loop shall be three turns of AWG #14 cross,linked polyethelene insulated, stranded copper wire, such as IMSA (International Municipal Signal Association) Specification 51-3, 1984, or equivalent. Loop inductance shall be between 60-80 microhenries.

LEAD-IN WIRE—The lead-in wire shall be AWG #14 twisted pair, aluminum polyester shield, polyethylene insulation, polyethylene jacket, inductance between 20 uH and 24 uH per 100 feet, such as IMSA Specification 50-2, 1984, or equivalent. For standardized test purposes, the shield shall be insulated from ground.

Field installation practices or detector unit design may require grounding the shield of the loop lead-in cable. Such grounding should be in accordance with the detector manufacturer's recommendation. (This paragraph has been approved as Authorized Engineering Information.)

SAWSLOT—The conductors shall be placed at the bottom of a 1-½ ± ¼-inch deep by ¼-inch wide sawslot. Pavement sawslot shall be filled with a suitable epoxy or equivalent sealant.

FIGURE 15-5
TEST LOOP CONFIGURATIONS

Copyright National Electrical Manufacturers Association
Provided by IHS under license with NEMA
No reproduction or networking permitted without license from IHS
Not for Resale

15.2.13 Test Vehicle Definition

Detector units shall detect all vehicles which ordinarily traverse the public streets and highways and which are comprised of sufficient conductive material suitably located to permit recognition and response by the detector system.

Vehicles are classified by this standard in accordance with the reduction in inductance resulting when they are centered in the single 6 ft. by 6 ft., three turn-test loop with 100 feet of lead-in.

These minimum reductions are as follows:

Class 1: 0.13 percent $\left(\frac{\triangle L}{L}\right)$ or 0.12 microhenries ($\triangle L$) inductance change with a single 6 ft × 6 ft, three turn loop, with 100 ft lead-in (small motorcycle);

Class 2: 0.32 percent $\left(\frac{\triangle L}{L}\right)$ or 0.3 microhenries ($\triangle L$) inductance change with a single 6 ft × 6 ft, three turn loop with 100 ft lead-in (large motorcycle);

Class 3: 3.2 percent $\left(\frac{\triangle L}{L}\right)$ or 3.0 microhenries ($\triangle L$) inductance change with a single 6 ft × 6 ft, three turn loop, with 100 ft lead-in (automobile).

The maximum reduction caused by any test vehicle shall be 5.4 percent $\left(\frac{\triangle L}{L}\right)$ or 5 microhenries ($\triangle L$) inductance change with a single 6 ft × 6 ft, three turn loop with 100 ft lead-in.

NEMA Standard 8-20-1986.

15.2.14 Sensitivity

The detector unit shall be capable of detecting any of the vehicles defined in 15.2.13 on any of the test loops defined in 15.2.12.

NEMA Standard 8-20-1986.

15.2.15 Sensitivity Control

When detecting test vehicles as described in 15.2.13 and operating on any of the test loop configurations described in 15.2.12, each channel of the detector unit shall include means to adjust the sensitivity such that it shall not produce an output when the nearest point of any test vehicle of 15.2.13 is 36 inches or more outside the loop(s) perimeter. A minimum of three sensitivity selections shall be provided for each detection channel.

NEMA Standard 8-20-1986.

15.2.16 Approach Speed

The detector unit shall detect any vehicle described in 15.2.13 over any of the single loops described in 15.2.12 traveling within the speed range of 5 to 80 miles per hour.

The detector unit shall detect any vehicle described in 15.2.13 over all of the loops of the four loop configurations described in 15.2.12 traveling within the speed range of 5 to 20 miles per hour.

All channels of a multichannel detector shall be operating at the same sensitivity and connected to equivalent inductances for the purpose of these tests.

NEMA Standard 8-20-1986.

15.2.17 Modes of Operation

Each detector channel shall be capable of functioning in the following two front panel selectable modes:

15.2.17.1 PRESENCE

When a Class 2 vehicle defined in 15.2.13, or larger vehicle occupies the center of any test loops described in 15.2.12, the detector unit shall be capable of maintaining a detection output for a minimum of 3 minutes.

15.2.17.2 PULSE

A detection output between 100 and 150 milliseconds shall be initiated when a vehicle enters the sensor loop zone of detection.

If this vehicle remains in the zone of detection, the detector unit shall become responsive within a maximum of 3 seconds to additional test vehicles entering the zone of detection.

The detector unit shall produce one and only one output pulse for a test vehicle traveling at 10 miles per hour across the zone of detection of the single sensor loops defined in 15.2.12.

NEMA Standard 8-20-1986.

15.2.18 Recovery from Sustained Occupancy

When operating in the presence mode, and following a sustained occupancy of 5 minutes, the detector unit shall recover to normal operation with at least 90 percent of its selected sensitivity within one second after the zone of detection is vacated.

NEMA Standard 8-20-1986.

15.2.19 Response Time

When operating in the presence mode, the detector unit shall be capable of being set to produce an output in response to a step decrease in inductance equivalent to the minimum decrease from a Class 1 vehicle defined

Copyright National Electrical Manufacturers Association
Provided by IHS under license with NEMA
No reproduction or networking permitted without license from IHS
Not for Resale

in 15.2.13 within not more than 125 milliseconds when tested on either of the single loop test configurations described in 15.2.12. In response to step return to the original inductance, the detector unit shall terminate its output within no more than 125 milliseconds.

When operating in the presence mode, the detector unit shall be capable of being set to produce an output in response to a step decrease in inductance equivalent to the minimum decrease from a Class 3 vehicle defined in 15.2.13 within not more than 50 milliseconds when tested on either of the single loop test configurations described in 15.2.12. In response to a step return to the original inductance, the detector unit shall terminate its output within not more than 50 milliseconds.

All channels of a multi-channel detector unit shall be operating at the same sensitivity and connected to equivalent inductances for the purpose of these tests.

NEMA Standard 8-20-1986.

For certain specific surveillance applications involving vehicle speeds in excess of 45 m.p.h., more precise response times might be required.

Authorized Engineering Information 8-20-1986.

15.2.20 Tuning

Each detector channel shall include one of the following means for accommodating the range of sensor loop/lead-in inductance.

15.2.20.1 MANUAL TUNING

The unit shall be capable of being tuned by an operator using one or more tuning controls. All necessary tuning controls shall be located on the front panel of the unit. It shall be possible to complete tuning within 3 minutes after the application of power. The unit shall achieve normal operation and at least 90 percent of its selected sensitivity within 3 minutes following tuning.

15.2.20.2 SELF-TUNING

The unit shall tune automatically upon the application of power. It shall achieve normal operation and at least 90 percent of its selected sensitivity within 30 seconds after application of power.

NEMA Standard 8-20-1986.

15.2.21 Self-Tracking

The detector unit shall automatically accommodate those after-tuning changes in the loop/lead-in electrical characteristics as might reasonably be expected to occur in undamaged loops, properly installed in sound pavement and exhibiting the electrical properties outlined in 15.2.11, without producing a false output or change in sensitivity.

NEMA Standard 8-20-1986.

15.2.22 Recovery from Power Interruption

After a power interruption longer than 20 milliseconds, the detector unit shall resume normal operation, with at least 90 percent of its selected sensitivity, within 30 seconds after the main supply voltage recovers to a voltage within the specified limits.

NEMA Standard 8-20-1986.

15.2.23 Crosstalk Avoidance

Each detector channel shall include means to prevent that channel from adversely interacting with any other channel. The means to prevent such interaction shall be either inherent, automatic, or manual.

NEMA Standard 8-20-1986.

15.2.24 Delay/Extension

Each channel of a unit with delay/extension shall have three modes of operation—delay, extension, and normal (i.e., neither delay nor extension). Channels 1 and 2 of four channel detector units shall be the ones to include the delay/extension feature.

15.2.24.1 DELAY

When selected, the output is delayed for the time set. If the vehicle departs before the time set, an output does not occur and the timer is reset. This delay timing is controlled by the DELAY/EXTENSION ENABLE input defined in 15.2.10.1.7 or DELAY/EXTENSION INHIBIT input defined in 15.2.10.2.5. See Figure 15-6.

The delay time shall be adjustable in the range from 0 to 30 seconds. The setability shall be within one second in the 0-15 second range and within two seconds in the 16-30 second range. The accuracy shall be ± ½ second or ± 5 percent of the setting, whichever is greater. When the DELAY/EXTENSION ENABLE input is inactive, the delay shall be zero (0 to 0.1 seconds). When the DELAY/EXTENSION INHIBIT input is active, the delay shall be zero (0 to 0.1 seconds).

Copyright National Electrical Manufacturers Association
Provided by IHS under license with NEMA
No reproduction or networking permitted without license from IHS
Not for Resale

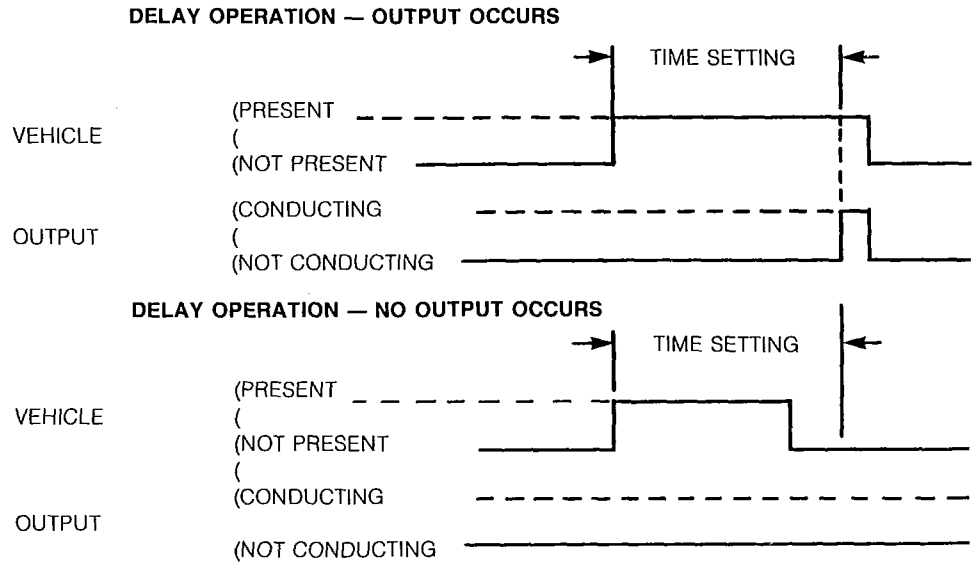

Figure 15-6
DELAY OPERATION

Care should be taken when installing a detector unit which employs DELAY/EXTENSION INHIBIT operation in place of a detector unit which does not have this feature as delay operation may be initiated which would cause improper intersection operation unless the delay/extension timing is set to zero. (This paragraph has been approved as Authorized Engineering Information.)

15.2.24.2 EXTENSION

When selected, the output is extended after the vehicle departs the zone of detection for the time set. If a new vehicle arrives before the extension timer times out, the timer is reset, the output is maintained, and the timer resumes timing when the vehicle departs. See Figure 15-7. This extension timing is controlled by the DELAY/EXTENSION ENABLE input defined in 15.2.10.1.7 or DELAY/EXTENSION INHIBIT input defined in 15.2.10.2.5.

The extension time shall be adjustable in the range from 0 to 7½ seconds. The setability shall be within ½ second. The accuracy shall be ± ½ second. When the DELAY/EXTENSION ENABLE input is inactive, the extension shall be zero (0 to 0.1 seconds). When the DELAY/EXTENSION INHIBIT input is active, the extension shall be zero (0 to 0.1 seconds).

NEMA Standard 8-20-1986.

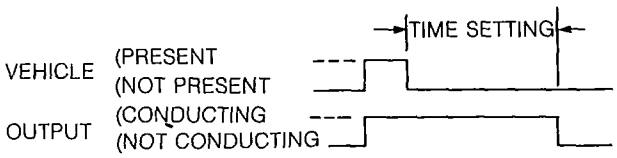

Figure 15-7
EXTENSION OPERATION

Copyright National Electrical Manufacturers Association
Provided by IHS under license with NEMA
No reproduction or networking permitted without license from IHS
Not for Resale

15.2.25 Controls and Indicators

All controls and indicators necessary for the operation of the detector unit shall be located on the front panel of the unit except as noted below. Multiple functions combined in a single control shall be permitted. The controls and indicators shall include, but are not limited to:

1. *Output Indicator*—Means to visually indicate the output state of each channel. Each channel shall have a separate indicator.
2. *Sensitivity Control*—Means to permit selection of the sensitivity of each channel as described in 15.2.15.
3. *Overcurrent Protection Device*—Required for ac powered units. If the overcurrent protection device on an ac powered unit is a fuse or circuit breaker, it shall be accessible from the front panel. Internal mounting of any other overcurrent protection device shall be permitted.
4. *Manual Tuning Control*—When required, it shall permit accommodation of the range of loop/lead-in inductances.
5. *Reset*—A control which unconditionally causes the detector or detection channel to retune to a non-vehicle present condition.
6. *Mode Selector*—Shall provide for selection of pulse or presence mode operation of each channel. Card mounting of this control shall be permitted on card rack units.
7. *Crosstalk Control*—As required, shall provide means to prevent interaction of channels as described in 15.2.23. Card mounting of this control shall be permitted on card rack units.
8. *Delay/Extension Selection Control*—The unit shall have either a control or combination of controls to allow for the selection of one of three operating modes—delay, extension, and normal (i.e., neither delay nor extension). It shall be permissible to have the normal mode selected by either setting a three position selector switch to the normal position or setting the delay/extension timing control to zero. Card mounting of the control(s) shall be permitted on card rack units.
9. *Delay/Extension Timing Control*—Shall provide means to permit setting of the time duration of the delay/extension period for each channel as described in 15.2.24. When a unit employing DELAY/EXTENSION INHIBIT operation is used to replace a unit without delay/extension operation, the timing controls shall be set to zero. Internal mounting of this control shall be permitted.

NEMA Standard 8-20-1986.

15.2.26 Marking

All units with Delay/Extension and with relay output(s) shall have a permanently attached notification on either the top, front, or side surface which reads as follows, or the equivalent:

NOTICE: The delay timing on this unit shall be set to zero if Pin J is not connected to a 120 VAC timing inhibit signal.

NEMA Standard 8-20-1986.

15.2.27 Output

This standard defines two devices for output interfacing. Detector units shall be configured to have one of the following devices as defined in 15.2.2. The output device shall have the following characteristics:

5.2.27.1 RELAY

1. *Contacts Closed*—Indicate detection output.
2. *Power Outage or Overcurrent Failure Condition*—Contacts closed indicate detection output.
3. *Output Circuit Isolation*—The isolation between the output terminals and other terminals shall exceed:
   a. Resistance 10^6 ohms
   b. Breakdown 1000 V rms
4. *Contact Rating* (resistive load)
   a. 2 milliamperes through 1 ampere @ 18 to 28 volts.
   b. 0.5 amp @ 120 VAC
   c. Maximum closed contact resistance—1 ohm.
5. *Mounting*—Plug-in with socket or direct solder mounting.
6. *Minimum Operations*
   a. 10^6 with contacts at rated load
   b. 10^7 total mechanical
7. Contacts shall be closed if the loop circuit is open.

15.2.27.2 SOLID STATE (ISOLATED)

1. *Output Solid State Device*—Conducting indicates detection output.
2. *Power Outage or Fuse Failure Condition*—Output device is nonconductive, indicating a no detection output condition.
3. *Output Circuit Isolation*—The isolation between each output device terminal pair and all other terminals shall exceed:
   a. Resistance 10^6 ohms
   b. Breakdown 1000 V rms
4. *Output Rating*—The output shall conduct a minimum of 20 milliamperes with a maximum 1.4 volt drop across the output terminals in the conducting state. The output shall conduct a maximum of 50 microamperes with any voltage between 0 and 26 VDC applied across the output terminals in the nonconductive state.

Copyright National Electrical Manufacturers Association
Provided by IHS under license with NEMA
No reproduction or networking permitted without license from IHS
Not for Resale

5. *Transition Time*—When switching to or from a steady state current in the range of 2.4 to 20 milliamperes, the transition time from 8 to 16 volts and vice versa shall be 0.1 milliseconds or less. The circuit(s) to which the output is connected is defined in 13.2.3.
6. *Maximum Voltage*—Hold off 30 VDC minimum under non-detect conditions.
7. Solid state devices shall be conducting if the loop circuit is open.

NEMA Standard 8-20-1986.

15.2.28 Electrical Connections Without Delay/Extension Timings

Detector units without Delay/Extension Timing shall have connector and connector pin terminations as defined in the following:

"Reserved" connector pin terminations are exclusively for assignment by this NEMA Standards Publication of additional specific input-output functions and/or reasons of interchangeability with units already in use not in conformance to this standard. These connector pins shall not be internally connected, except as specifically defined by this NEMA Standards Publication.

15.2.28.1 SINGLE-CHANNEL, SHELF-MOUNTED DETECTOR

Type 1. Relay Output—Shall mate with cable connector MS3106A-18-1S, or equivalent. Input-output connector pin termination shall be as follows:

Pin A	AC− (common)
Pin B	Relay Common
Pin C	AC+ (line side)
Pin D	Loop Input
Pin E	Loop Input
Pin F	Output Normally Open (continuity to relay common during detect)
Pin G	Reserved*
Pin H	Chassis Ground
Pin I	Reserved
Pin J	Reserved

*May be connected to the normally closed output of the relay—for special function use only. During normal operation, standard detector functions, as defined in this standard, will not require a connection to this pin. Detector unit harnesses will not normally contain a wire connected to pin G. (This note has been approved as Authorized Engineering Information.)

Type 2. Solid State Output (Isolated)—Shall mate with cable connector MS3106A-18-1SW, or equivalent. Input-output connector pin terminations shall be as follows:

Pin A	AC− (common)
Pin B	Output (−)
Pin C	AC+ (line side)
Pin D	Loop Input
Pin E	Loop Input
Pin F	Output (+)
Pin G	Spare
Pin H	Chassis Ground
Pin I	Reserved
Pin J	Reserved

A Type 2 unit is not physically or electrically interchangeable with a single channel detector with a relay output. (This sentence has been approved as Authorized Engineering Information)

15.2.28.2 TWO-CHANNEL, SHELF-MOUNTED DETECTORS

Type 3. Relay Output, 2-Channel—Shall have two connectors each of which shall mate with cable connector MS3106A-18-1S, or equivalent.

A Type 3 unit is not physically or electrically interchangeable with a 2 channel detector unit with a solid-state output. (This sentence has been approved as Authorized Engineering Information.)

Input-output connector pin terminations shall be as follows:

Channel 1, Connector

Pin A	AC− (common)
Pin B	Relay Common, Ch 1
Pin C	AC+ (line side)
Pin D	Loop Input, Ch 1
Pin E	Loop Input, Ch 1
Pin F	Output Normally Open, Ch 1 (Continuity to relay common Ch 1 during detect)
Pin G	Reserved**
Pin H	Chassis Ground
Pin I	Reserved
Pin J	Reserved

Channel 2, Connector

Pin A	Reserved
Pin B	Relay Common, Ch 2
Pin C	Reserved*

Copyright National Electrical Manufacturers Association
Provided by IHS under license with NEMA
No reproduction or networking permitted without license from IHS
Not for Resale

Pin D	Loop Input, Ch 2
Pin E	Loop Input, Ch 2
Pin F	Output Normally Open, Ch 2 (continuity to relay common Ch 2 during detect)
Pin G	Reserved**
Pin H	Chassis Ground
Pin I	Reserved
Pin J	Reserved

*Shall not be internally connected.

**May be connected to the normally closed output of the relay—for special function use only. During normal operation, standard detector functions, as defined in this standard, will not require a connection to this pin. Detector unit harnesses will not normally contain a wire connected to pin G. (This note has been approved as Authorized Engineering Information.)

Type 4. Solid-State Output (Isolated) 2-Channel—Shall have two connectors, each of which shall mate with cable connector MS3106A,-18-1SW, or equivalent. A relay output unit is not physically or electrically interchangeable with a solid-state output unit due to rotation of the connector insert. Input-output connector pin terminations shall be as follows:

Channel 1, Connector

Pin A	AC− (common)
Pin B	Output Ch 1 (−)
Pin C	AC+ (line side)
Pin D	Loop Input, Ch 1
Pin E	Loop Input, Ch 1
Pin F	Output, Ch 1 (+)
Pin G	Spare
Pin H	Chassis Ground
Pin I	Reserved
Pin J	Reserved

Channel 2, Connector

Pin A	Reserved
Pin B	Output, Ch 2 (−)
Pin C	Reserved*
Pin D	Loop Input, Ch 2
Pin E	Loop Input, Ch 2
Pin F	Output Ch 2 (+)
Pin G	Spare
Pin H	Chassis Ground
Pin I	Reserved
Pin J	Reserved

*Shall not be internally connected.

15.2.28.3 TYPES 7 & 8 CARD RACK—TWO AND FOUR-CHANNEL

Two and four-channel card racks shall mate with a 44-terminal, double-row, 0.156-inch contact spacing, Cinch Jones card edge connection 50-44A-30M, or equivalent. Input-output connector pin terminations shall be as follows:

Pin A	Logic Ground	1. Reserved
Pin B	+24 VDC Supply	2. Reserved
Pin C	Reserved for Reset	3. Spare
Pin D	Loop Input, Ch 1	4. Redundant Loop Input, Ch 1 (optional)
Pin E	Loop Input, Ch 1	5. Redundant Loop Input, Ch 1 (optional)
Pin F	Output, Ch 1 (+)	6. Spare
Pin H	Output, Ch 1 (−)	7. Spare
Pin J	Loop Input, Ch 2	8. Redundant Loop Input, Ch 2 (optional)
Pin K	Loop Input, Ch 2	9. Redundant Loop Input, Ch 2 (optional)
Pin L	Chassis Ground	10. Spare
Pin M	Reserved	11. Reserved
Pin N	Reserved	12. Reserved
Pin P	Loop Input, Ch 3	13. Redundant Loop Input, Ch 3 (optional)
Pin R	Loop Input, Ch 3	14. Redundant Loop Input, Ch 3 (optional)
Pin S	Output, Ch 3 (+)	15. Spare
Pin T	Output, Ch 3 (−)	16. Spare
Pin U	Loop Input, Ch 4	17. Redundant Loop Input, Ch 4 (optional)
Pin V	Loop Input, Ch 4	18. Redundant Loop Input, Ch 4 (optional)
Pin W	Output, Ch 2 (+)	19. Spare
Pin X	Output, Ch 2 (−)	20. Spare
Pin Y	Output, Ch 4 (+)	21. Spare
Pin Z	Output, Ch 4 (−)	22. Spare

Polarization keys shall be located at three positions:

1. Between B/2 and C/3
2. Between M/11 and N/12
3. Between E/5 and F/6

Two-channel units shall have no connection to pins P, R, S, T, U, V, Y, Z, 13, 14, 17, and 18.

Copyright National Electrical Manufacturers Association
Provided by IHS under license with NEMA - -
No reproduction or networking permitted without license from IHS

Not for Resale

15.2.28.4 TYPE 9 RELAY OUTPUT FOUR CHANNEL MS CONNECTOR

Shall mate with 19 pin cable connector MS 3106A-2-14S, or equivalent.

Input-output connector pin terminations shall be as follows:

Pin A	AC− (common)
Pin B	Relay Common, Ch 4 Pin C AC+ (line side)
Pin D	Loop Input, Ch 1
Pin E	Loop Input, Ch 1
Pin F	Loop Input, Ch 2
Pin G	Loop Input, Ch 2
Pin H	Chassis Ground
Pin J	Loop Input, Ch 3
Pin K	Loop Input, Ch 3
Pin L	Loop Input, Ch 4
Pin M	Loop Input, Ch 4
Pin N	Output Normally Open, Ch 1 (continuity to relay common Ch 1 during detect)
Pin P	Relay Common, Ch 1
Pin R	Relay Common, Ch 2
Pin S	Output Normally Open, Ch 2 (continuity to relay common Ch 2 during detect)
Pin T	Relay Common, Ch 3
Pin U	Output Normally Open, Ch 3 (continuity to relay common Ch 3 during detect)
Pin V	Output Normally Open, Ch 4 (continuity to relay common Ch 4 during detect)

NEMA Standard 8-20-1986.

15.2.29 Electrical Connections With Delay/Extension Timings

Detector units with Delay/Extension Timing shall have connector and connector pin terminations as defined as follows:

"Reserved" connector pin terminations are exclusively for assignment by this NEMA Standards Publication of additional functions and for reasons of interchangeability with units in use, but not already in conformance to this standard. These connector pins shall not be internally connected, except as specifically defined by this NEMA Standards Publication.

15.2.29.1 SINGLE-CHANNEL, SHELF-MOUNTED DETECTOR

Type 1T Relay Output—Shall mate with cable connector MS3106A-18-1S, or equivalent. When this unit is used to replace a Type 1 unit of the same keying, the delay/extension timing shall be set to zero.

Failure to set the delay/extension timing to zero when replacing a detector unit without delay/extension operation may initiate delay operation which will cause improper intersection operation. A relay output unit is not physically or electrically interchangeable with a solid state unit due to rotation of the connector. (This paragraph has been approved as Authorized Engineering Information.)

Input-output connector pin terminations shall be as follows:

Pin A	AC− (common)
Pin B	Relay Common
Pin C	AC+ (line side)
Pin D	Loop input
Pin E	Loop Input
Pin F	Output Normally Open (continuity to relay common during detect)
Pin G	Reserved*
Pin H	Chassis Ground
Pin I	Reserved
Pin J	Delay/Extension Inhibit Input (AC)

*May be connected to the normally closed output of the relay—for special function use only. During normal operation standard detection functions as defined in this standard will not require a connection to this pin. Detector unit harnesses will not normally contain a wire connected to pin G. (This note has been approved as Authorized Engineering Information.)

Type 2T Solid-State Output (isolated)—Shall mate with cable connector MS3106A-18-1SW, or equivalent.

A Type 2T unit is not physically or electrically interchangeable with a single channel detector with a relay output. (This sentence has been approved as Authorized Engineering Information.)

Input-output connector pin terminations shall be as follows:

Pin A	AC− (common)
Pin B	Output (−)
Pin C	AC+ (line side)
Pin D	Loop Input
Pin E	Loop Input
Pin F	Output (+)
Pin G	Spare
Pin H	Chassis Ground
Pin I	+24 VDC Supply Input
Pin J	Delay/Extension Enable Input (DC)

15.2.29.2 TWO-CHANNEL, SHELF-MOUNTED DETECTORS

Type 3T Relay Output, 2-Channel—Shall have two connectors each of which shall mate with cable connector MS3106A,18-1S, or equivalent.

When this unit is used to replace one Type 3 or two Type 1 units of the same keying, the delay/extension timing shall be set to zero. Failure to set the delay/extension timing to zero when replacing a detector unit without delay/extension operation may initiate delay

Copyright National Electrical Manufacturers Association
Provided by IHS under license with NEMA
No reproduction or networking permitted without license from IHS
Not for Resale

operation which will cause improper intersection operation. A relay output unit is not electrically or physically interchangeable with a solid-state output unit due to the rotation of the connector insert. (Last two sentences have been approved as Authorized Engineering Information.)

Input-output connector pin terminations shall be as follows:

Channel 1, Connector

Pin A	AC− (common)
Pin B	Relay Common, Ch 1
Pin C	AC+ (line side)
Pin D	Loop input, Ch 1
Pin E	Loop Input, Ch 1
Pin F	Output Normally Open Ch 1 (continuity to relay common Ch 1 during detect)
Pin G	Reserved**
Pin H	Chassis Ground
Pin I	Reserved
Pin J	Delay/Extension Inhibit Input (AC), Ch 1

Channel 2, Connector

Pin A	Reserved
Pin B	Relay Common, Ch 2
Pin C	Reserved*
Pin D	Loop Input, Ch 2
Pin E	Loop Input, Ch 2
Pin F	Output Normally Open Ch 2 (continuity to relay common Ch 2 during detect)
Pin G	Reserved**
Pin H	Chassis Ground
Pin I	Reserved
Pin J	Delay/Extension Inhibit Input (AC), Ch 2

*Shall not be internally connected.

**May be connected to the normally closed output of the relay—for special function use only. During normal operation, standard detector functions, as defined in this standard, will not require a connection to this pin. Detector unit harness will not normally contain a wire connected to pin G. (This note has been approved as Authorized Engineering Information.)

Type 4T Solid-State Output (Isolated) 2-channel—Shall have two connectors, each of which shall mate with cable connector MS3106A-18-1SW, or equivalent.

A Type 4T unit is not physically or electrically interchangeable with a 2 channel detector with relay output. (This sentence has been approved as Authorized Engineering Information.)

Input-output connector pin terminations shall be as follows:

Channel 1, Connector

Pin A	AC− (common)
Pin B	Output, Ch 1 (−)
Pin C	AC+ (line side)
Pin D	Loop Input, Ch 1
Pin E	Loop Input, Ch 1
Pin F	Output, Ch 1 (+)
Pin G	Spare
Pin H	Chassis Ground
Pin I	+24 VDC Supply Input
Pin J	Delay/Extension Enable Input (DC), Ch 1

Channel 2, Connector

Pin A	Reserved
Pin B	Output, Ch 2 (−)
Pin C	Reserved*
Pin D	Loop Input, Ch 2
Pin E	Loop Input, Ch 2
Pin F	Output, Ch 2 (+)
Pin G	Spare
Pin H	Chassis Ground
Pin I	Reserved
Pin J	Delay/Extension Enable Input (DC), Ch 2

*Shall not be internally connected.

15.2.29.3 CARD RACK—TWO AND FOUR CHANNEL

Type 7T and 8T—Shall mate with a 44 terminal, double-row, 0.156-inch contact spacing, Cinch Jones card edge connector 50-44A-30M, or equivalent. Input-output connector pin terminations shall be as follows:

Pin A	Logic Ground	1. Delay/Extension Enable Input (DC), Ch 1
Pin B	+24 VDC Supply	2. Delay/Extension Enable Input (DC), Ch 2
Pin C	Reserved for Reset	3. Spare
Pin D	Loop Input, Ch 1	4. Redundant Loop Input, Ch 1 (optional)
Pin E	Loop Input, Ch 1	5. Redundant Loop Input, Ch 1 (optional)
Pin F	Output, Ch 1 (+)	6. Spare
Pin H	Output, Ch 1 (−)	7. Spare
Pin J	Loop Input, Ch 2	8. Redundant Loop Input, Ch 2 (optional)
Pin K	Loop Input, Ch 2	9. Redundant Loop Input, Ch 2 (optional)
Pin L	Chassis Ground	10. Spare
Pin M	Reserved	11. Reserved

Copyright National Electrical Manufacturers Association
Provided by IHS under license with NEMA
No reproduction or networking permitted without license from IHS
Not for Resale

Pin N	Reserved	12. Reserved
Pin P	Loop Input, Ch 3	13. Redundant Loop Input, Ch 3 (optional)
Pin R	Loop Input, Ch 3	14. Redundant Loop Input, Ch 3 (optional)
Pin S	Output, Ch 3 (+)	15. Spare
Pin T	Output, Ch 3 (−)	16. Spare
Pin U	Loop Input, Ch 4	17. Redundant Loop Input, Ch 4 (optional)
Pin V	Loop Input, Ch 4	18. Redundant Loop Input, Ch 4 (optional)
Pin W	Output, Ch 2 (+)	19. Spare
Pin X	Output, Ch 2 (−)	20. Spare
Pin Y	Output, Ch 4 (+)	21. Spare
Pin Z	Output, Ch 4 (−)	22. Spare

Polarization keys shall be located at three positions:

1. Between B/2 and C/3
2. Between M/11 and N/12
3. Between E/5 and F/6

Two channel units shall have no connection to pins P, R, S, T, U, V, Y, Z, 13, 14, 17, and 18.

NEMA Standard 8-20-1986.

Copyright National Electrical Manufacturers Association
Provided by IHS under license with NEMA
No reproduction or networking permitted without license from IHS
Not for Resale

TS 1-83 6470247 0004376 0
C-62-32

National Electrical Manufacturers Association
2101 L Street, N.W. Suite 300
Washington, D.C. 20037 (202) 457-8400

PROPOSED, NEW AND REVISED STANDARDS

TO ALL REPRESENTATIVES OF MEMBER COMPANIES
IN THE TRAFFIC CONTROL SYSTEMS SECTION

Subject: Revision No. **2** to the NEMA Standards Publication for *Traffic Control Systems*, NEMA Pub. No. **TS 1-1983**.

Dear Representative:

On October 16, 1985, the NEMA Codes and Standards Committee appended text to the subject publication which is reflected in the attached pages. Please insert these pages into your copy of the book. Also enclosed is a new front cover and front page to show that your book now contains Revision Nos. 1 and 2, and a revised table of contents.

Please insert these pages carefully since extra copies are not available.

Sincerely yours,

Krystyna Bagnato

Krystyna Bagnato
Standards Publications Editor

Enc: Revision No. 2 to TS 1-1983
Copies to: All Known Holders of TS 1

Copyright National Electrical Manufacturers Association
Provided by IHS under license with NEMA
No reproduction or networking permitted without license from IHS
Not for Resale

TS 1-83 6470247 0004377 2

STANDARDS PUBLICATION/NO. TS 1

C-62-32

nema

Traffic Control Systems

NEMA

NATIONAL ELECTRICAL MANUFACTURERS ASSOCIATION ■ 2101 L STREET, N.W., WASHINGTON, D.C. 20037

Copyright National Electrical Manufacturers Association
Provided by IHS under license with NEMA
No reproduction or networking permitted without license from IHS
Not for Resale

NEMA TS 1-1983

TS 1

TRAFFIC CONTROL SYSTEMS

Revision No. 1—July 1984
Revision No. 2—October 1985

Published by

National Electrical Manufacturers Association
2101 L Street, NW
Washington, DC 20037
(202) 457-8400

© 1986 by National Electrical Manufacturers Association

Copyright National Electrical Manufacturers Association
Provided by IHS under license with NEMA
No reproduction or networking permitted without license from IHS
Not for Resale

TABLE OF CONTENTS

		Page
Section 1	Definitions	1
Section 2	Environmental Standards and Test Procedures	12
Section 5	Solid-State Load Switches	41
Section 6	Conflict Monitors	45
Section 7	Inductive Loop Detectors	57
Section 8	Solid-State Flashers	68
Section 10	Terminals and Facilities	70-a
Section 11	Inductive Loop Detectors with Delay and Extension Timing	71
Section 13	Interface Standards for Advanced Two-Phase through Eight-Phase Solid-State Traffic Controller Units	84
Section 14	Definitions and Physical and Functional Standards for Advanced Two-Phase through Eight-Phase Solid-State Traffic Signal Controller Units of the Vehicle-Activated Type	88

Copyright National Electrical Manufacturers Association
Provided by IHS under license with NEMA
No reproduction or networking permitted without license from IHS
Not for Resale

Scope

This Standards Publication covers widely used traffic signalling systems which are used to facilitate and expedite the safe flow of pedestrian and vehicular traffic. The standards reflect study of inputs from traffic engineers and installers of traffic signalling equipment and professional organizations in the field of traffic control.

This publication supersedes TS 1-1976, *Traffic Control Systems,* and its revisions.

Foreword

These standards define traffic signalling equipment which can be safely installed to render the intended functions.

Properly manufactured traffic control systems are, however, only one factor in minimizing potential hazards which may be associated with the use of electricity. The reduction of hazard involves the joint efforts of the various equipment manufacturers, the system designer, the installer, and the user. Information provided herein is intended to assist users and others in the selection of traffic signalling equipment that will meet their technical needs.

This publication has, therefore, been promulgated with a view towards reducing the hazard to persons and property when traffic signalling equipments conforming with these standards are properly selected and installed.

Comments and suggestions for the improvement of this document will be welcomed. They should be sent to:

Manager, Engineering Department
National Electrical Manufacturers Association
2101 L Street, N.W.
Washington, D.C. 20037

Copyright National Electrical Manufacturers Association
Provided by IHS under license with NEMA
No reproduction or networking permitted without license from IHS
Not for Resale

Section 1
DEFINITIONS

The words and phrases defined in the following sections shall, for the purpose of these standards, have the meanings ascribed to them herein.

These definitions reflect the consensus of the traffic control equipment industry as represented by NEMA and are intended to be in harmony with terminology in current usage, such as is published in the "Manual on Uniform Traffic Control Devices" and various technical reports of the Institute of Transportation Engineers.*

1.1 CONTROL EQUIPMENT

1.1.1 Auxiliary Equipment

Separate devices used to add supplementary features to a controller assembly.

NEMA Standard 11-6-1975.

1.1.2 Barrier

See 14.1.2.

1.1.3 Cabinet

An outdoor enclosure for housing the controller unit and associated equipment.

NEMA Standard 11-6-1975.

1.1.4 Call

A registration of a demand for right-of-way by traffic at a controller unit.

1.1.4.1 SERVICEABLE CONFLICTING CALL

A call which:

1. Occurs on a conflicting phase not having the right-of-way at the time the call is placed.
2. Occurs on a conflicting phase which is capable of responding to a call.
3. When occurring on a conflicting phase operating in an occupancy mode, remains present until given its right-of-way.

NEMA Standard 11-6-1975.

1.1.5 Check

An outgoing circuit that indicates the existence of unanswered call.

NEMA Standard 11-6-1975.

1.1.6 Controller Assembly

A complete electrical mechanism mounted in a cabinet for controlling the operation of a traffic control signal.

1.1.6.1 FLASHER CONTROLLER ASSEMBLY

A complete electrical mechanism for flashing a traffic signal or beacon.

* Institute of Transportation Engineers, 525 School Street, S.W., Washington, D.C. 20024.

1.1.6.2 FULL-TRAFFIC-ACTUATED CONTROLLER ASSEMBLY

A type of traffic-actuated controller assembly in which means are provided for traffic actuation on all approaches to the intersection.

1.1.6.3 ISOLATED CONTROLLER ASSEMBLY

A controller assembly for operating traffic signals not under master supervision.

1.1.6.4 MASTER CONTROLLER ASSEMBLY

A controller assembly for supervising a system of secondary controller assemblies.

1.1.6.5 MASTER-SECONDARY CONTROLLER ASSEMBLY

A controller assembly operating traffic signals and providing supervision of other secondary controller assemblies.

1.1.6.6 OCCUPANCY CONTROLLER ASSEMBLY (LANE-OCCUPANCY CONTROLLER OR DEMAND CONTROLLER, AND PRESENCE CONTROLLER)

A traffic-actuated controller which responds to the presence of vehicles within an extended zone of detection.

1.1.6.7 PEDESTRIAN-ACTUATED CONTROLLER ASSEMBLY

A controller assembly in which intervals, such as pedestrian WALK and clearance intervals, can be added to or included in the controller cycle by the actuation of a pedestrian detector.

1.1.6.8 PRETIMED CONTROLLER ASSEMBLY

A controller assembly for the operation of traffic signals with predetermined:

1. Fixed cycle length(s).
2. Fixed interval duration(s).
3. Interval sequence(s).

1.1.6.9 SECONDARY CONTROLLER ASSEMBLY (SLAVE)

A controller assembly which operates traffic signals under the supervision of a master controller assembly.

Copyright National Electrical Manufacturers Association
Provided by IHS under license with NEMA
No reproduction or networking permitted without license from IHS
Not for Resale

1.1.6.10 Semi-traffic-actuated Controller Assembly

A type of traffic-actuated controller assembly in which means are provided for traffic actuation on one or more but not all approaches to the intersection.

1.1.6.11 Traffic-actuated Controller Assembly

A controller assembly for supervising the operation of traffic control signals in accordance with the varying demands of traffic as registered with the controller by detectors.

NEMA Standard 11-6-1975.

1.1.7 Controller Unit (Dispatcher or Timer)

A controller unit is that portion of a controller assembly that is devoted to the selection and timing of signal displays.

1.1.7.1 Digital Controller Unit

A controller unit wherein timing is based upon a defined frequency source such as a 60-hertz alternating current source. (See 1.1.43.3)

1.1.7.2 Dual-ring Controller Unit

See 14.1.3.1.

1.1.7.3 Minor Movement Controller Unit

A device that can be added to a controller assembly to provide subordinate phase timing.

1.1.7.4 Single-ring Controller Unit

See 14.1.3.2.

1.1.7.5 Synchronous Controller Unit

A controller unit in which the timing mechanism is controlled by and dependent on a suitable frequency standard such as the frequency of the alternating-current source.

1.1.7.6 Synchronous-motor Controller Unit

A controller unit operated by a synchronous motor which maintains a constant speed determined by the frequency of the power supply circuit.

NEMA Standard 4-7-1983.

1.1.8 Coordinator

A device used to relate the timing of one controller unit to others. (See 1.1.26)

NEMA Standard 11-6-1975.

1.1.9 Cycle

In a pretimed controller unit, a complete sequence of signal indication. In an actuated controller unit, a complete cycle is dependent on the presence of calls on all phases.

1.1.9.1 Cycle Length

The time period in seconds required for one complete cycle.

NEMA Standard 11-6-1975.

1.1.10 Density

A measure of the concentration of vehicles, stated as the number of vehicles per mile per lane.

NEMA Standard 11-6-1975.

1.1.11 Detector

See 1.2.6.

1.1.12 Device

1.1.12.1 Electromechanical Device

A device which is characterized by electrical circuits utilizing relays, step switches, motors, etc.

1.1.12.2 Electronic Device

A device which is characterized by electrical circuits utilizing vacuum tubes, resistors, capacitors, inductors and which may include electromechanical and solid-state devices.

1.1.12.3 Solid-state Device

A device which is characterized by electrical circuits, the active components of which are semi-conductors, to the exclusion of electromechanical devices or tubes.

NEMA Standard 11-6-1975.

1.1.13 Dwell

See "rest", 1.1.37.

1.1.14 Extension, Unit

The timing interval during the extensible portion which is resettable by each detector actuation. The green right-of-way of the phase may terminate on expiration of the unit extension time. (See 1.1.21.1.)

NEMA Standard 11-6-1975.

1.1.15 Entry

See 14.1.4.

Copyright National Electrical Manufacturers Association
Provided by IHS under license with NEMA
No reproduction or networking permitted without license from IHS
Not for Resale

1.1.16 Flasher

A device used to open and close signal circuits at a repetitive rate.

NEMA Standard 11-6-1975.

1.1.17 Force Off

A command that will force the termination of the right-of-way.

NEMA Standard 11-6-1975.

1.1.18 Gap Reduction

A feature whereby the "unit extension" or allowed time spacing between successive vehicle actuations on the phase displaying the green in the extensible portion of the interval is reduced.

NEMA Standard 11-6-1975.

1.1.19 Hold

A command that retains the existing right of way.

NEMA Standard 11-6-1975.

1.1.20 Interval

The part or parts of the signal cycle during which signal indications do not change.

1.1.20.1 Minimum Green Interval

The shortest green time of a phase. If a time setting control in designated as "minimum green", the green time shall be not less than that setting.

1.1.20.2 Pedestrian Clearance Interval

The first clearance interval following the pedestrian WALK indication, normally flashing DON'T WALK.

1.1.20.3 Red Clearance Interval

A clearance interval which may follow the yellow interval during which both the terminating phase and the next right-of-way phase display red.

1.1.20.4 Sequence, Interval

The order of appearance of signal indications during successive intervals of a cycle.

1.1.20.5 Yellow Change Interval

The first interval following the green right-of-way interval in which the signal indication for that phase is yellow.

NEMA Standard 11-6-1975.

1.1.21 Limit

1.1.21.1 Extension Limit

The maximum time of the extensible portion for which actuations on any traffic phase may retain the right of way after actuation on an opposing traffic phase.

1.1.21.2 Maximum Limit

The maximum green time after an opposing actuation, which may start in the initial portion.

NEMA Standard 11-6-1975.

1.1.22 Manual

1.1.22.1 Manual Operation

The operation of a controller assembly by means of a hand-operated device(s). A pushbutton is an example of such a device.

1.1.22.2 Manual Pushbutton

An auxiliary device for hand operation of a controller assembly.

NEMA Standard 11-6-1975.

1.1.23 Memory

1.1.23.1 Detector Memory

The retention of an actuation for future utilization by the controller assembly

1.1.23.2 Nonlocking Memory

A mode of actuated-controller-unit operation which does not require detector memory.

NEMA Standard 11-6-1975.

1.1.24 Modular Design

A design concept such that functions are sectioned into plug-in units which can be readily exchanged with similar units.

NEMA Standard 11-6-1975.

1.1.25 Monitor, Signal Conflict

A device used to continually check for the presence of conflicting signal indications and to provide an output in response to conflict.

NEMA Standard 11-6-1975.

1.1.26 Offset

Offset is the time relationship, expressed in seconds or percent of cycle length, determined by the difference between a defined interval portion of the coordinated phase green and a system reference point.

NEMA Standard 11-6-1975.

Copyright National Electrical Manufacturers Association
Provided by IHS under license with NEMA
No reproduction or networking permitted without license from IHS

Not for Resale

1.1.27 Omit, Phase (Special Skip, Force Skip)

A command that causes omission of a selected phase.

NEMA Standard 11-6-1975.

1.1.28 Overlap

A right-of-way indication that allows traffic movement when the right of way is being assigned to two or more traffic phases.

NEMA Standard 11-6-1975.

1.1.29 Passage Period

The time allowed for a vehicle to travel at a selected speed from the detector to the nearest point of conflicting traffic.

NEMA Standard 11-6-1975.

1.1.30 Phase

1.1.30.1 Conflicting Phases

Conflicting phases are two or more traffic phases which will cause interfering traffic movements if operated concurrently.

1.1.30.2 Nonconflicting Phases

Nonconflicting phases are two or more traffic phases which will not cause interfering traffic movements if operated concurrently.

1.1.30.3 Pedestrian Phase

A traffic phase allocated to pedestrian traffic which may provide a right-of-way pedestrian indication either concurrently with one or more vehicular phases, or to the exclusion of all vehicular phases.

1.1.30.4 Phase Sequence

A predetermined order in which the phases of a cycle occur.

1.1.30.5 Subordinate Phase (Minor Phase)

A traffic phase in which the right-of-way is dependent on the related operation (leading or lagging) of a specific independent phase. A subordinate phase cannot occur independently of its associated phase (parent phase).

1.1.30.6 Traffic Phase

Those right-of-way, change and clearance intervals in a cycle assigned to any independent movement(s) of traffic.

1.1.30.7 Vehicular Phase

A vehicular phase is a phase which is allocated to vehicular traffic movement as timed by the controller unit.

NEMA Standard 11-6-1975.

1.1.31 Portion

1.1.31.1 Extensible Portion

That portion of the green interval of an actuated phase following the initial portion which may be extended, for example, by traffic actuation.

1.1.31.2 Initial Portion

The first timed portion of the green interval in an actuated controller unit:

1. Fixed Initial Portion—A preset initial portion that does not change.
2. Computed Initial Portion—An initial portion which is traffic adjusted.
3. Maximum Initial Portion—The limit of the computed initial portion.
4. Minimum Initial Portion—(See "Fixed Initial Portion.")
5. Added Initial Portion—An increment of time added to the minimum initial portion in response to vehicle actuations.

1.1.31.3 Interval Portion

A discrete subdivision of an interval during which the signals do not change.

NEMA Standard 11-6-1975.

1.1.32 Preemption

The transfer of the normal control of signals to a special signal control mode.

NEMA Standard 11-6-1975.

1.1.33 Preemptor, Traffic Controller

A device which provides preemption.

NEMA Standard 11-6-1975.

1.1.34 Preferred Sequence

See 14.1.7

1.1.35 Priority-traffic Phase Selection

A means by which, upon demand from priority traffic, the right-of-way for such traffic is obtained or modified.

NEMA Standard 11-6-1975.

Copyright National Electrical Manufacturers Association
Provided by IHS under license with NEMA
No reproduction or networking permitted without license from IHS
Not for Resale

1.1.36 Red Indication, Minimum (Red Revert)

Provision within the controller unit to assure a minimum RED signal indication in a phase following the YELLOW CHANGE interval of that phase.

NEMA Standard 11-6-1975.

1.1.37 Rest

The interval portion of a phase when present timing requirements have been completed.

NEMA Standard 11-6-1975.

1.1.38 Ring

See 14.1.1.

1.1.39 Split

A division of the cycle length allocated to each of the various phases (normally expressed in percent).

NEMA Standard 11-6-1975.

1.1.40 Suppressor, Radio Interference

A device inserted in the power line in the controller assembly (cabinet) that minimizes the radio interference transmitted back into the power supply line, which interference may be generated by the controller or other mechanisms in the cabinet.

NEMA Standard 11-6-1975.

1.1.41 Switch

1.1.41.1 Automanual Switch

A device which, when operated, discontinues normal signal operation and permits manual operation.

1.1.41.2 Flash Control Switch

A device which, when operated, discontinues normal signal operation and causes the flashing of any predetermined combination of signal indications.

1.1.41.3 Power Line Switch (Disconnect Switch)

A manual switch for disconnecting power to the controller assembly and traffic control signals.

1.1.41.4 Recall Switch

A manual switch which causes the automatic return of the right-of-way to its associated phase.

1.1.41.5 Signal Load Switch

A device used to switch power to the signal lamps.

1.1.41.6 Signal Shut-down Switch

A manual switch to discontinue the operation of traffic control signals without affecting the power supply to other components in the controller cabinet.

1.1.41.7 Time Switch

A device for the automatic selection of modes of operation of traffic signals in a manner prescribed by a predetermined time schedule.

NEMA Standard 11-6-1975.

1.1.42 Terminals, Field

Devices for connecting wires entering the controller assembly.

NEMA Standard 11-6-1975.

1.1.43 Timing

1.1.43.1 Analog Timing

Pertaining to a method of timing that measures continuous variables, such as voltage or current.

1.1.43.2 Concurrent Timing

A mode of controller unit operation whereby a traffic phase can be selected and timed simultaneously and independently with another traffic phase.

1.1.43.3 Digital Timing

Pertaining to a method of timing that operates by counting discrete units.

NEMA Standard 11-6-1975.

1.1.44 Yield

A command which permits transfer of the right-of-way. (See 1.1.19.)

NEMA Standard 11-6-1975.

1.2 DETECTORS

1.2.1 Actuation

The operation of any type of detector.

NEMA Standard 11-6-1975.

1.2.2 Amplifier, Dectector

A device that is capable of intensifying the electrical energy produced by a sensor.

NEMA Standard 11-6-1975.

1.2.3 Antenna

The radiating or receiving elements utilized in transmitting or receiving electromagnetic waves.

NEMA Standard 11-6-1975.

Copyright National Electrical Manufacturers Association
Provided by IHS under license with NEMA
No reproduction or networking permitted without license from IHS
Not for Resale

1.2.4 Call

See 1.1.4.

1.2.5 Detection

1.2.5.1 Advisory Detection

The detection of vehicles on one or more intersection approaches solely for the purpose of modifying the phase sequence and/or length for other approaches to the intersection.

1.2.5.2 Passage Detection

The ability of a vehicle detector to detect the passage of a vehicle moving through the detection zone and to ignore the presence of a vehicle stopped within the detection zone.

1.2.5.3 Presence Detection

The ability of a vehicle detector to sense that a vehicle, whether moving or stopped, has appeared in its field.
NEMA Standard 11-6-1975.

1.2.6 Detector

A device for indicating the presence or passage of vehicles or pedestrians.

1.2.6.1 Bidirectional Detector

A detector that is capable of being actuated by vehicles proceeding in either of two directions and of indicating in which of the directions the vehicles were moving.

1.2.6.2 Calling Detector

A detector that is installed in a selected location to detect vehicles which may not otherwise be detected, and whose output may be modified by the controller unit.

1.2.6.3 Classification Detector

A detector that has the capability of differentiating among types of vehicles.

1.2.6.4 Directional Detector

A detector that is capable of being actuated only by vehicles proceeding in one specified direction.

1.2.6.5 Extension Detector

A dector that is arranged to register actuations at the controller only during the green interval for that approach so as to extend the green time of the actuating vehicles.

1.2.6.6 Infrared Detector

A detector that senses radiation in the infrared spectrum.

1.2.6.7 Light-sensitive Detector

A detector that utilizes a light-sensitive device for sensing the passage of an object interrupting a beam of light directed at the sensor.

1.2.6.8 Loop Detector

A detector that senses a change in inductance of its inductive loop sensor by the passage or presence of a vehicle near the sensor.

1.2.6.9 Magnetic Detector

A detector that senses changes in the earth's magnetic field caused by the movement of a vehicle near its sensor.

1.2.6.10 Magnetometer Detector

A detector that measures the difference in the level of the earth's magnetic forces caused by the passage or presence of a vehicle near its sensor.

1.2.6.11 Nondirectional Detector

A detector that is capable of being actuated by vehicles proceeding in any direction.

1.2.6.12 Pedestrian Detector

A detector that is responsive to operation by or the presence of a pedestrian.

1.2.6.13 Pneumatic Detector

A pressure-sensitive detector that uses a pneumatic tube as a sensor.

1.2.6.14 Pressure-sensitive Detector

A detector that is capable of sensing the pressure of a vehicle passing over the surface of its sensor.

1.2.6.15 Radar Detector

A detector that is capable of sensing the passage of a vehicle through its field of emitted microwave energy.

1.2.6.16 Sampling Detector

Any type of vehicle detector used to obtain representative traffic flow information.

Copyright National Electrical Manufacturers Association
Provided by IHS under license with NEMA
No reproduction or networking permitted without license from IHS
Not for Resale

1.2.6.17 Side-fire Detector

A vehicle detector with its sensor located to one side of the roadway.

1.2.6.18 Sound-sensitive Vehicle Detector

A detector that responds to sound waves generated by the passage of a vehicle over the surface of the sensor.

1.2.6.19 Ultrasonic Detector

A detector that is capable of sensing the passage or presence of a vehicle through its field of emitted ultrasonic energy.

NEMA Standard 11-6-1975.

1.2.7 Detector Mode

A term used to describe the operation of a detector channel output when a presence detection occurs.

1. Pulse Mode—Detector produces a short output pulse when detection occurs.
2. Controlled Output—The ability of a detector to produce a pulse that has a predetermined duration regardless of the length of time a vehicle is in the field of influence.
3. Continuous-presence Mode—Detector output continues if any vehicle (first or last remaining) remains in the field of influence.
4. Limited-presence Mode—Detector output continues for a limited period of time if vehicles remain in field of influence.

1.2.8 Lead-in Cable

See 11.1.7.

1.2.9 Loop Detector System

See 11.1.2.

1.2.10 Loop Detector Unit

See 11.1.5.

1.2.11 Output

1.2.11.1 Carryover Output

The ability of a detector to continue its output for a predetermined length of time following an actuation.

1.2.11.2 Delayed Output

The ability of a detector to delay its output for a predetermined length of time during an extended actuation.

NEMA Standard 4-7-1983.

1.2.12 Probe

The sensor form that is commonly used with a magnetometer-type detector.

NEMA Standard 11-6-1975.

1.2.13 Sensor

The sensing element of a detector.

NEMA Standard 11-6-1975.

1.2.14 Transducer

A sensor which transmits energy to the detection zone and interprets the signal received from the detection zone.

NEMA Standard 11-6-1975.

1.2.15 Transmitter

That portion of a detector which transmits energy to a sensor.

NEMA Standard 11-6-1975.

1.2.16 Vehicle Detector System

See 11.1.1.

NEMA Standard 4-7-1983.

1.2.17 Zone of Detection (Sensing Zone)

That area of the roadway within which a vehicle will be detected by a vehicle detector system.

NEMA Standard 11-6-1975.

1.3 SIGNALS

1.3.1 Backplate

A strip of thin material extending outward parallel to the signal face on all sides of a signal housing to provide a suitable background for the signal indications.

NEMA Standard 11-6-1975.

1.3.2 Focal Point

The design point within the optical unit, related to the reflector, from which emitted light will be redirected by the reflector into a prescribed pattern.

NEMA Standard 11-6-1975.

1.3.3 Indication, Signal

The illumination of a signal lens (or an equivalent device) whereby the movement of vehicular or pedestrian traffic is controlled.

NEMA Standard 11-6-1975.

Copyright National Electrical Manufacturers Association
Provided by IHS under license with NEMA
No reproduction or networking permitted without license from IHS
Not for Resale

1.3.4 Lamp

That part of the optical unit which, when energized, electrically provides the optical unit light source.

NEMA Standard 11-6-1975.

1.3.5 Lens

That part of the optical unit through which light from the light source and reflector passes and, in so doing, is redirected into a prescribed pattern and is filtered to a prescribed color.

NEMA Standard 11-6-1975.

1.3.6 Optical Unit

An assembly of a lens, reflector, light source, and other components if required, with the necessary supporting parts to be used for providing a signal indication.

NEMA Standard 11-6-1975.

1.3.7 Reflector

A contoured reflective surface which redirects the light from the light source toward the lens.

NEMA Standard 11-6-1975.

1.3.8 Section

1.3.8.1 Section Blank Door (Blank Door)

A section door which closes the face of the housing but does not support a lens, i.e., closes a housing in which no optical unit is used.

1.3.8.2 Section Door (Door)

That part of a signal section which closes the face of the housing and supports the optical unit lens.

1.3.8.3 Section Housing (Housing)

That part of a signal section which encloses, protects, and supports the optical unit.

NEMA Standard 11-6-1975.

1.3.9 Signal

An optical device which is electrically operated by a controller assembly and which communicates a prescribed action (or actions) to traffic.

1.3.9.1 Adjustable Signal

A signal head having the signal faces mounted in the support hardware so that each face may be adjusted or "aimed", as required, to present the indication to approaching traffic.

1.3.9.2 Highway Traffic Signal

Any power-operated traffic-control device (except a sign or a barricade warning light or steady-burning electric lamps) by which traffic is warned or is directed to take some specific action.

1.3.9.3 Lane-use Control Signal

A highway traffic signal which is erected to control the direction of vehicular traffic movement in an individual lane.

1.3.9.4 Nonadjustable Signal (Fixed-faced Signal)

A signal having the faces mounted in a framework so that the indications are presented at a fixed angle.

1.3.9.5 Pedestrian Signal

A traffic control signal which is erected for the exclusive purpose of directing pedestrian traffic at signalized locations.

1.3.9.6 Signal Face

A section or combination of sections, each capable of displayiing its indication in one direction.

1.3.9.7 Signal Head

An assembly containing one or more signal faces.

1.3.9.8 Signal Installation

All of the equipment and material involved in the control of traffic at one or more intersections by a single controller assembly.

1.3.9.9 Signal Section

The optical unit and housing capable of displaying one indication.

1.3.9.10 Train Approach Signal

A highway traffic signal which indicates to highway traffic the approach and passage of railroad trains at a railroad highway grade crossing.

NEMA Standard 11-6-1975.

1.3.10 SOCKET

That part of the optical unit which supports the lamp and is so arranged as to fix the position of the light source with reference to the focal point of the reflector.

NEMA Standard 11-6-1975.

Copyright National Electrical Manufacturers Association
Provided by IHS under license with NEMA
No reproduction or networking permitted without license from IHS
Not for Resale

1.3.11 VISOR (HOOD)

That part of a signal section which protects the lens face from direct ambient light.

1.3.11.1 CUTAWAY VISOR (CONTOURED, STANDARD)

A visor which encircles approximately 300 degrees around the lens, the lower half of which may be cut away and contoured.

1.3.11.2 FULL-CIRCLE TUNNEL VISOR

A visor which encircles the entire lens.

1.3.11.3 OPEN-BOTTOM TUNNEL VISOR

A visor which encircles the entire lens except a segment equal to approximately 2 inches of circumference at the bottom of the lens.

NEMA Standard 11-6-1975.

1.4 SIGNAL MOUNTING HARDWARE

1.4.1 Arm

1.4.1.1 BRACKET ARM

A signal bracket, for bracket mount applications, which complements a tubular bracket arm but which is not of tubular construction.

1.4.1.2 TUBULAR BRACKET ARM

A signal bracket, for bracket mount applications, of tubular construction through which wiring can be passed to provide electrical connection of the signal faces supported by the bracket.

NEMA Standard 11-6-1975.

1.4.2 Balance Adjuster

A device used in span-wire-mount applications to permit alignment of the point of suspension with respect to the center of gravity of the signal head so that the signal will hang vertically.

NEMA Standard 11-6-1975.

1.4.3 Cable Entrance Adapter

A mounting bracket of tubular construction which is used between the span wire hanger and the signal brackets to provide for passing control cable into the signal head.

NEMA Standard 11-6-1975.

1.4.4 Hanger

1.4.4.1 DISCONNECT HANGER (JACK BOX)

A mounting device for a span wire or a mast arm mount that contains a terminal block for a plug and socket and a means of readily attaching or detaching the signal head to and from the hanger.

1.4.4.2 SPAN WIRE HANGER (SPAN WIRE CLAMP)

A mounting bracket for supporting a signal head by clamping onto a span wire.

NEMA Standard 11-6-1975.

1.4.5 Mount

1.4.5.1 BRACKET MOUNT (SIDE MOUNT)

A signal mounting arrangement where the signal head is mounted approximately parallel to the vertical axis of the pole.

1.4.5.2 ELEVATOR MAST ARM MOUNT

A mast arm mount where the signal face is supported on the mast arm by a bracket between the face sections so as to place one or more of the sections above the mast arm.

1.4.5.3 FLEXIBLE MAST ARM MOUNT

A mast arm mount where the signal head is attached to the mast arm with a flexible joint and connector to permit "free swinging" between the signal and the mast arm.

1.4.5.4 MAST ARM MOUNT

A signal head mounting supported from a rigid arm extended over the roadway for the purpose of supporting the signal head.

1.4.5.5 MID-MAST ARM MOUNT

A signal head mounted at some point on the mast arm between the end of the mast arm and the pole.

1.4.5.6 POST MOUNT (PEDESTAL MOUNT)

A signal head mounted on top of a post.

1.4.5.7 RIGID MAST ARM MOUNT

A mast arm mount where the signal head is rigidly affixed to the mast arm to prevent any relative movement between the signal and the arm.

1.4.5.8 SPAN WIRE MOUNT (SPAN WIRE)

A signal head suspended over the roadway on cable.

NEMA Standard 11-6-1975.

1.4.6 Mounting Brackets

A grouping of parts used to fix a signal head in the operating position.

NEMA Standard 11-6-195.

Copyright National Electrical Manufacturers Association
Provided by IHS under license with NEMA
No reproduction or networking permitted without license from IHS
Not for Resale

1.4.7 Signal Hardware

A grouping of parts used to fix signal faces in relation to each other to make a signal head.

NEMA Standard 11-6-1975.

1.4.8 Slipfitter

A mounting bracket which provides for mounting a signal head onto the top of a post or pedestal.

NEMA Standard 11-6-1975.

1.4.9 Spreader

1.4.9.1 Solid Spreader

A signal bracket having solid arms radiating from a hub.

1.4.9.2 Tubular Spreader

A signal bracket having tubular arms radiating from a hub through which wiring can be passed to provide electrical interconnection of the signal faces supported by the signal bracket.

1.4.10 Terminal Compartment (Terminal Bracket)

A compartment having a terminal block for connecting signal control conductors and which may support the signal face.

NEMA Standard 11-6-1975.

1.5 SIGNAL SUPPORTING MEMBERS

1.5.1 Bridge Structure, Traffic Signal

The structural member which is suspended between two or more supports.

NEMA Standard 11-6-1975.

1.5.2 Mast Arm

1.5.2.1 Braced-type Mast Arm (Tie Rod)

A semirigid mast arm which is braced in position.

1.5.2.2 Traffic Signal Mast Arm

A structural support over the roadway, extending from a pole, for the purpose of supporting the signal head(s).

1.5.2.3 Truss-type Mast Arm

A mast arm consisting of an assemblage of members forming a rigid framework in the vertical plane.

1.5.2.4 Tube-type Mast Arm

A mast arm consisting of a single tubular member.

NEMA Standard 11-6-1975.

1.5.3 Pedestal, Traffic Signal (Post)

A vertical support on top of which the signal head or controller assembly is mounted.

NEMA Standard 11-6-1975.

1.5.4 Pole, Traffic Signal

A vertical support to which structural items and hardware are attached for supporting traffic signals.

NEMA Standard 11-6-1975.

1.5.5 Span Wire, Traffic Signal

One or more cables used as a means of support for traffic control devices.

NEMA Standard 11-6-1975.

1.5.6 Support, Traffic Signal

The physical means whereby a signal head is supported in a particular location.

NEMA Standard 11-6-1975.

Copyright National Electrical Manufacturers Association
Provided by IHS under license with NEMA
No reproduction or networking permitted without license from IHS

Not for Resale

1.6 CROSS-REFERENCED DEFINITIONS

Other Term	NEMA Term	NEMA Number
All-red interval	Red clearance interval	1.1.20.3
Bus preemptor	Priority-traffic phase selection	1.1.35
Control box	Cabinet	1.1.3
Dispatcher	Controller unit	1.1.7
Filter	Radio interference suppressor	1.1.40
Fire preemptor	Traffic controller preemptor	1.1.33
Fixed time controller	Pretimed controller assembly	1.1.6.8
Head	Signal	1.3.9
Head	Signal head	1.3.9.7
Housing	Cabinet	1.1.2
Indication	Signal face	1.3.9.6
Line filter	Radio interference suppressor	1.1.40
Lock-in	Detector memory	1.1.23.1
Manual control	Manual operation	1.1.22.1
Minor phase	Subordinate phase	1.1.30.5
Pad	Pressure-sensitive detector	1.2.6.14
Progression	Coordinator	1.1.8
Railroad preemptors	Traffic controller preemptor	1.1.33
Red revert	Minimum red indication	1.1.36
Sequence	Interval sequence	1.1.20.4
Time cycle	Cycle	1.1.9
Timer	Controller unit	1.1.7
Traffic controllers	Controllers	1.1
Traffic phase	Phase	1.1.30
Traffic signals	Signals	1.3.9
Treadle	Pressure-sensitive detector	1.2.6.14
Vehicle interval	Unit extension	1.1.14
Vehicle interval	Passage period	1.1.29
Vehicle preemption	Priority-traffic phase selection	1.1.35
Volume-density operation	Gap reduction	1.1.18
Volume-density operation	Added initial portion	1.1.31.2

Copyright National Electrical Manufacturers Association
Provided by IHS under license with NEMA
No reproduction or networking permitted without license from IHS
Not for Resale

Section 2
ENVIRONMENTAL STANDARDS AND TEST PROCEDURES

Section 2 relates to environmental standards and operating conditions for intersection traffic control equipment. The controller assembly includes the weatherproof cabinet, controller unit, load switches, detectors, flashers, signal-conflict monitor, and alternating-current line filters.

Clause 2.1 establishes the limits of the environmental and operating conditions in which the controller assembly will perform, and 2.2 defines the test procedures required to demonstrate the conformance of controller assemblies and sub-assemblies with the provisions of the standards.

2.1 ENVIRONMENTAL AND OPERATING STANDARDS

2.1.1 Operating Voltage, Frequency and Power Interruption

The controller assembly, and the major units of the controller assembly, shall perform all of their defined functions when the voltage and frequency from the local service transformer are within the specified standards. The power interruption standard shall define the controller unit mode of operation upon restoration of power relative to the length of time and power has been interrupted.

NEMA Standard 11-6-1975.

2.1.2 Voltage

The voltage range shall be 95 to 135 volts alternating current. The nominal voltage shall be 120 volts alternating current.

NEMA Standard 11-6-1975.

2.1.3 Frequency Range

The operating frequency range shall be 60 hertz ± 3.0 hertz.

NEMA Standard 11-6-1975.

2.1.4 Power Interruption

2.1.4.1 Two or more power interruptions which are separated by power restorations of 1500 or more milliseconds shall be considered as separate interruptions, and the controller shall react to the power interruption as follows:

1. Interruption of 500 Milliseconds or Less—Upon restoring power, the controller unit shall continue to operate as though the power interruption had not occurred.
2. Interruption of More Than 500 Milliseconds and Less than 1000 Milliseconds—Upon restoring power, the controller unit shall either continue to operate (2.1.4.1.1) or shall revert to its start-up sequence (2.1.4.1.3).
3. Interruption of 1000 Milliseconds or More—Upon restoring power, the controller unit shall revert to its start-up sequence.

2.1.4.2 Three interruptions of 300 milliseconds or less which are separated by power restorations of 300 milliseconds or more shall not cause the controller unit to revert to its start-up sequence.

NEMA Standard 4-7-1983.

2.1.5 Temperature and Humidity

The intent of this standard is to define the ambient temperature and humidity inside the weatherproof cabinet of the controller assembly. The controller assembly and the major units of the controller assembly shall maintain all of their defined functions when the temperature and humidity ambients are within the specified limits of this standard.

2.1.5.1 Ambient Temperature

The operating ambient temperature range shall be from −30°F (−34°C) to +165°F (+74°C). The storage temperature range shall be from −50°F (−45°C) to +200°F (+93°C).

The rate of change in ambient temperature shall not exceed 30°F (17°C) per hour, during which the relative humidity shall not exceed 95 percent.

2.1.5.2 Humidity

The relative humidity shall not exceed 95 percent over the temperature range of +40°F (+4.4°C) to +110°F (+43.3°C).

Above 110°F, constant absolute humidity shall be maintained. This will result in the relative humidities shown in Table 2-1 for dynamic testing.

NEMA Standard 11-6-1975.

2.1.6 Transients, Power Service

The controller assembly and the major units of the controller assembly shall maintain all of their defined functions when the independent test pulse levels specified in 2.1.6.1 and 2.1.6.2 occur on the alternating-current power service:

Copyright National Electrical Manufacturers Association
Provided by IHS under license with NEMA
No reproduction or networking permitted without license from IHS
Not for Resale

2.1.6.1 High-repetition Noise Transients

The test pulses shall not exceed the following conditions:

1. Amplitude—300 volts, both positive and negative polarity.
2. Peak Power—2500 watts.

Table 2-1

WET-BULB DRY-BULB RELATIVE HUMIDITY AT BAROMETRIC PRESSURE OF 29.92 IN. Hg.

Dry Bulb		Relative Humidity,	Wet Bulb	
°F	°C	Percent*	°F	°C
40	4.4	75	37	2.8
50	10.0	80	47	8.3
60	15.6	83	57	13.9
70	21.1	86	67	19.4
70	21.1	86	67	19.4
80	26.7	87	77	25.0
90	32.2	89	87	30.6
100	37.8	89	97	36.1
110	43.3	90	107	41.7
120	48.9	70	109	42.8
130	54.4	50	109	42.8
140	60.0	38	109	42.8
150	65.6	28	109	42.8
160	71.1	21	109	42.8
165	73.9	18	109	42.8

* For dynamic testing.

3. Repetition—1 pulse approximately every other cycle moving uniformly over the full wave in order to sweep across 360 degrees of the line cycle once every 3 seconds.
4. Pulse Rise Time—1 microsecond.
5. Pulse Width—10 microseconds.

2.1.6.2 Low-repetition High-energy Transients

The test pulses shall not exceed the following conditions:

1. Amplitude—600 volts, ±5 percent, both positive and negative polarity.
2. Energy Source—Capacitor, oil filled, 10 microfarads ±10 percent, internal surge impedance less than 1 ohm.
3. Repetition—1 discharge every 10 seconds.
4. Pulse Position—Random across 360 degrees of the line cycle.

NEMA Standard 11-6-1975.

2.1.7 Transients, Input-output Terminals

The controller assembly and the major units of the controller assembly shall maintain all of their defined functions when the test pulse occurs on the input-output terminals.

1. Amplitude—300 volts, both positive and negative polarity.
2. Pulse Source—1000 ohms nominal impedance.
3. Repetition—1 pulse per second, for a minimum of five pulses per selected terminal.
4. Pulse Rise Time—1 microsecond.
5. Pulse Width—10 microseconds.

NEMA Standard 4-7-1983.

2.1.8 Nondestruct Transient Immunity

The controller assembly and the major units of the controller assembly shall be capable of withstanding a high-energy transient having the following characteristics repeatedly applied to the alternating-current input terminals (no other power connected to terminals) without failure of the test specimen:

1. Amplitude—1000 volts ±5 percent, both positive and negative polarity.
2. Energy Source—Capacitor, oil filled, 15 microfarads ±10 percent, internal surge impedance less than 1 ohm.
3. Repetition—Applied to the controller assembly once every 2 seconds for a maximum of three applications for each polarity.

After the foregoing, the controller assembly and the major units of the controller assembly shall perform all of their defined functions upon the application of nominal alternating-current power.

NEMA Standard 4-7-1983.

2.1.9 Timing Accuracy

2.1.9.1 Deviation

The controller unit and the other major units of the controller assembly shall maintain all of their programmed functions within the maximum timing deviation.

2.1.9.2 Setability and Repeatability

The accuracy of the timing of any interval portion is limited by the setability and repeatability error of that interval portion's readout and setting device.

1. Setability is the difference between the indication and the actual timings obtained.
2. Repeatability is the measure of the duplicating capability for repetitive timings of a given setting.

NEMA Standard 11-6-1975.

Copyright National Electrical Manufacturers Association
Provided by IHS under license with NEMA
No reproduction or networking permitted without license from IHS
Not for Resale

2.1.10 Analog Timing

2.1.10.1 SETABILITY

The setability tolerance shall be ±5 percent of the dial settings or one half second, whichever is greater.

2.1.10.2 REPEATABILITY

The repeatability tolerance shall be ±5 percent of timing average or ½ second, whichever is greater.

NEMA Standard 4-7-1983.

2.1.11 Digital Timers

Timing shall be accomplished by digital methods and shall utilize power line frequency as a base.

2.1.11.1 SETABILITY

The setability shall be in discrete increments.

2.1.11.2 REPEATABILITY

The digital timing shall relate to the input line frequency so that no cumulative or drift errors will occur in timing intervals. Any interval timed by a unit employing digital techniques shall not deviate by more than ±100 milliseconds from its set value at a power source frequency of 60 Hertz.

NEMA Standard 4-7-1983.

2.1.12 Vibration

The major units of the controller assembly shall maintain their programmed functions and physical integrity when subjected to a vibration of 5 to 30 cycles per second up to 0.5 gravity applied in each of three mutually perpendicular planes.

NEMA Standard 4-7-1983.

2.1.13 Shock

The major units of the controller assembly shall suffer neither permanent mechanical deformation nor any damage that renders the unit inoperable, when subjected to a shock of 10G applied in each of three mutually perpendicular planes.

NEMA Standard 11-6-1975.

2.2 TEST PROCEDURES

2.2.1 Test Facilities

All instrumentation specified in the test procedures, such as voltmeters, ammeters, thermocouples, pulse timers, etc., shall be selected in accordance with good engineering practice. In all cases where time limit tests are required, the allowance for any instrumentation errors shall be included in the limit test.

1. Variable Voltage Source—A variable source capable of supplying 20 amperes from 95 to 135 volts alternating current.
2. Environmental Chamber—An environmental chamber capable of attaining temperatures of −30°F (−34°C) to +165°F (+74°C) and relative humidities given in Table 2-1.

The chamber shall be large enough to accept the test unit including the weatherproof equipment cabinet with its door in the full-open position. (The cabinet door may be removed for the "open-door" test.)

3. Voltmeters
   a. An RMS responding meter for measuring conflict monitor signals.
   b. A meter calibrated for RMS voltages, assuming sine wave signals, for all other ac voltage measurements.
   c. A suitable dc meter.
4. Test Loads—Test loads shall consist of tungsten-filament lamps.
5. Time Indicator—A time indicator with sufficient scale to cover the range and resolution of timings to be taken and with a readout capability of at least 0.01 second.
6. Transient Generator(s)—Transient generator(s) capable of supplying the transients outlined in 2.1.6 through 2.1.8.
7. Temperature Measuring Instruments—Recording pyrometer and thermocouple capable of measuring and recording from 100°F (38°C) to 200°F (93°C) with an accuracy of ±3°F (2°C) (for use in the test described in 2.2.4).
8. Miscellaneous—Test switches; cables; a #12-AWG 120-volt alternating-current service connection with a separate grounding wire from the variable-voltage source; two-wire service cable with adequate conductors in consideration of the signal lamp test load; and #16-AWG wiring of test lamps to load switch outputs.

NEMA Standard 4-7-1983.

2.2.2 Test Unit

The test unit shall be the complete controller assembly, in the weatherproof equipment cabinet with provisions for ventilation, as specified by the equipment manufacturer, including:

1. Terminal facilities.
2. Surge protection.
3. Line filters.
4. Controller unit.
5. Load switches.
6. Signal conflict monitor.
7. Auxiliary control devices (as required).
8. Flashers.

The test equipment shall be set up in accordance with Figure 2-1.

NEMA Standard 4-7-1983.

Copyright National Electrical Manufacturers Association
Provided by IHS under license with NEMA
No reproduction or networking permitted without license from IHS
Not for Resale

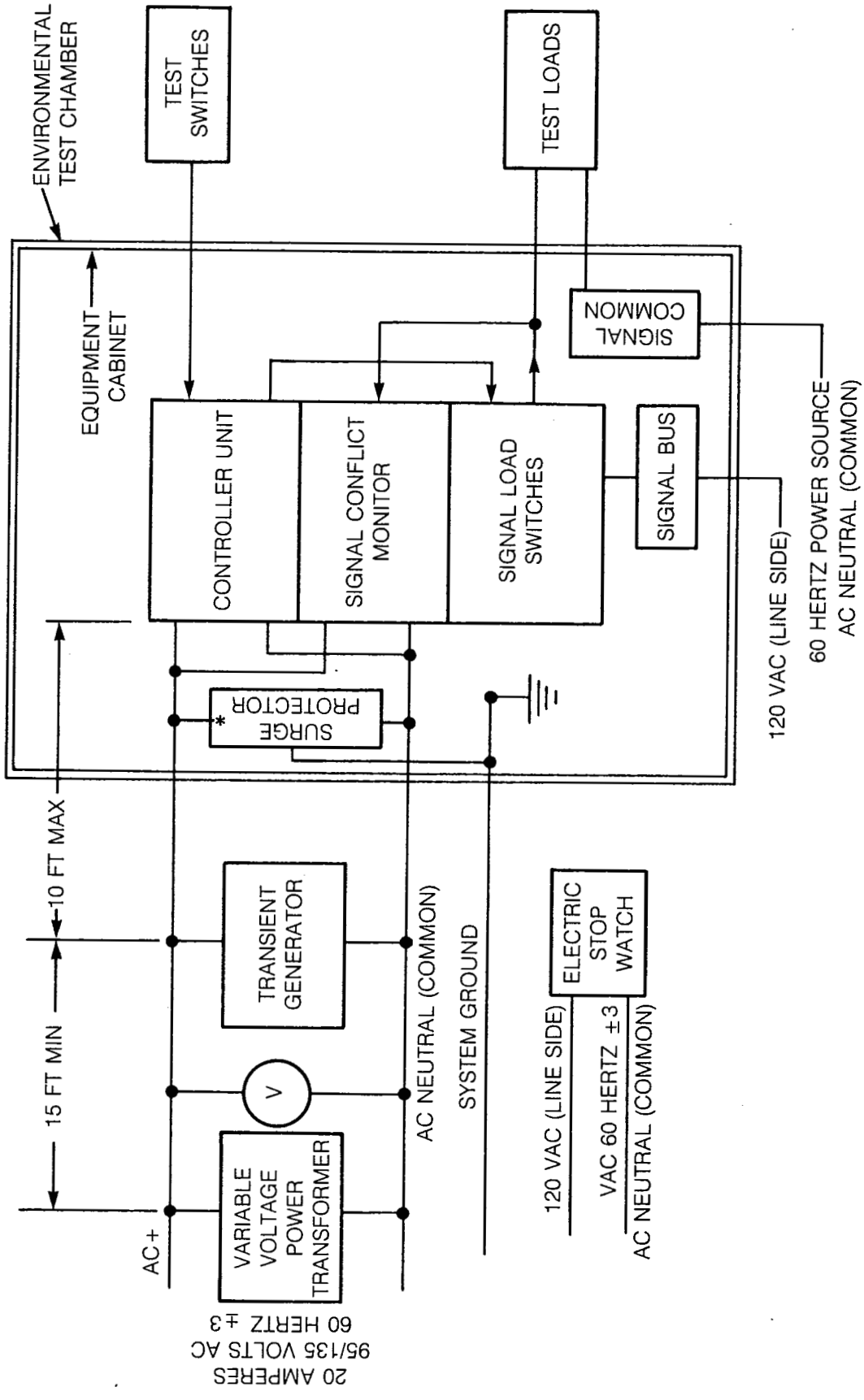

Figure 2-1
6A TYPICAL TEST DIAGRAM

*The surge protector and line filtering in the equipment cabinet shall be removed during the transient probe; 2.2.3.2, 1 through 13.

Copyright National Electrical Manufacturers Association
Provided by IHS under license with NEMA
No reproduction or networking permitted without license from IHS
Not for Resale

2.2.3 Test Procedure—Transients, Temperature, Voltage and Humidity

In the interest of insuring safe and reliable operation of the traffic control equipment covered by these standards, the limits over which the testing is performed have been made extremely wide and severe. Therefore, it is expected that some failures may occur during the test program. (See 2.2.3.9.)

2.2.3.1 Test A—Placement in Environmental Chamber and Check-out of Hook-up

1. Place the equipment under test in the environmental chamber with all switches in the OFF position. The door of the weatherproof equipment cabinet shall be left open initially. Connect the equipment to a variable voltage power transformer as shown in Figure 2-2 and connect the voltmeter and transient generator in the proper position. The transient generator shall be connected to the alternating-current input circuit at a point as shown—at least 15 feet from the alternating-current power source and not over 10 feet from the input to the controller unit.

2. Test loads for design approval shall be assigned 1200 watts to each circuit of the first load switch and 300 watts to the remaining load switches. The 300 watt loads may be reduced to the extent necessary to limit the total power dissipation to 4500 watts.

Once design approval has been established, alternative loads of 50 percent of the design approval values can be used. (Authorized Engineering Information 4-7-1983).

3. Connect test switches to the appropriate terminals within the equipment cabinet to simulate vehicle calls, pedestrian pushbuttons, and the various features incorporated into the specific test unit. Place these switches in the proper position for desired operation.

4. Verify the test hook-up. Adjust the variable-voltage power transformer to 120 volts alternating current and apply power to the test unit. Verify that the controller unit goes through its prescribed start-up sequence and cycles properly in accordance with the operation determined by the positioning of test switches in item 3. Operation of the test lamps should be in agreement with controller unit sequencing and in accordance with specified operation.

Upon the satisfactory completion and verification of the test hook-up, proceed with Test B.

2.2.3.2 Test B—Transient Tests (Power Service)

The surge protector and line filters shall be removed from the alternating-current power source circuit of the equipment cabinet for the following transient tests:

1. Program the controller unit so it will dwell in a selected phase—120 volts alternating-current input from the variable-voltage power transformer.

2. Set a transient generator to provide high-repetition noise transients as follows:

a. Amplitude—300 volts ±5 percent, both positive and negative polarity.

b. Peak power—2500 watts.

c. Repetition rate—one pulse every other cycle moving uniformly over the full wave in order to sweep once every 3 seconds across 360 degrees of line cycle.

d. Pulse rise time—1 microsecond.

e. Pulse width—10 microseconds.

3. Apply the transient generator output to the alternating-current voltage input as indicated in Figure 2-1 for at least 5 minutes. Repeat this test for the condition of dwell for each phase of the controller unit. The controller unit must continue to dwell in the selected phase without incidence of false calls or indications.

4. Program the controller unit to cycle on minimum recall. Turn on the transient generator (output in accordance with item 2) for 10 minutes, during which time the controller unit shall continue to cycle without malfunction.

5. Set a transient generator to provide high-repetition noise transients as follows:

a. Amplitude—300 volts ±5 percent, both positive and negative polarity.

b. Source impedance—not less than 1000 ohms nominal impedance.

c. Repetition—one pulse per second for a minimum of five pulses per selected terminal.

d. Pulse rise time—1 microsecond.

e. Pulse width—10 microseconds.

Program the controller unit so it will dwell in a selected phase—120 volts alternating-current input.

6. Apply the transient generator (output in accordance with item 5) between logic ground and the connecting cable termination of selected input/output terminals of the controller unit.*

A representative sampling of selected input/output terminations shall be tested. The controller unit shall continue to dwell in the selected phase without incidence of false calls or indications.

* Certain auxiliary equipment may not comply with the requirements of this test at this time. Special test procedures should be used for auxiliary equipment.

Authorized Engineering Information 4-7-1983.

Copyright National Electrical Manufacturers Association
Provided by IHS under license with NEMA
No reproduction or networking permitted without license from IHS
Not for Resale

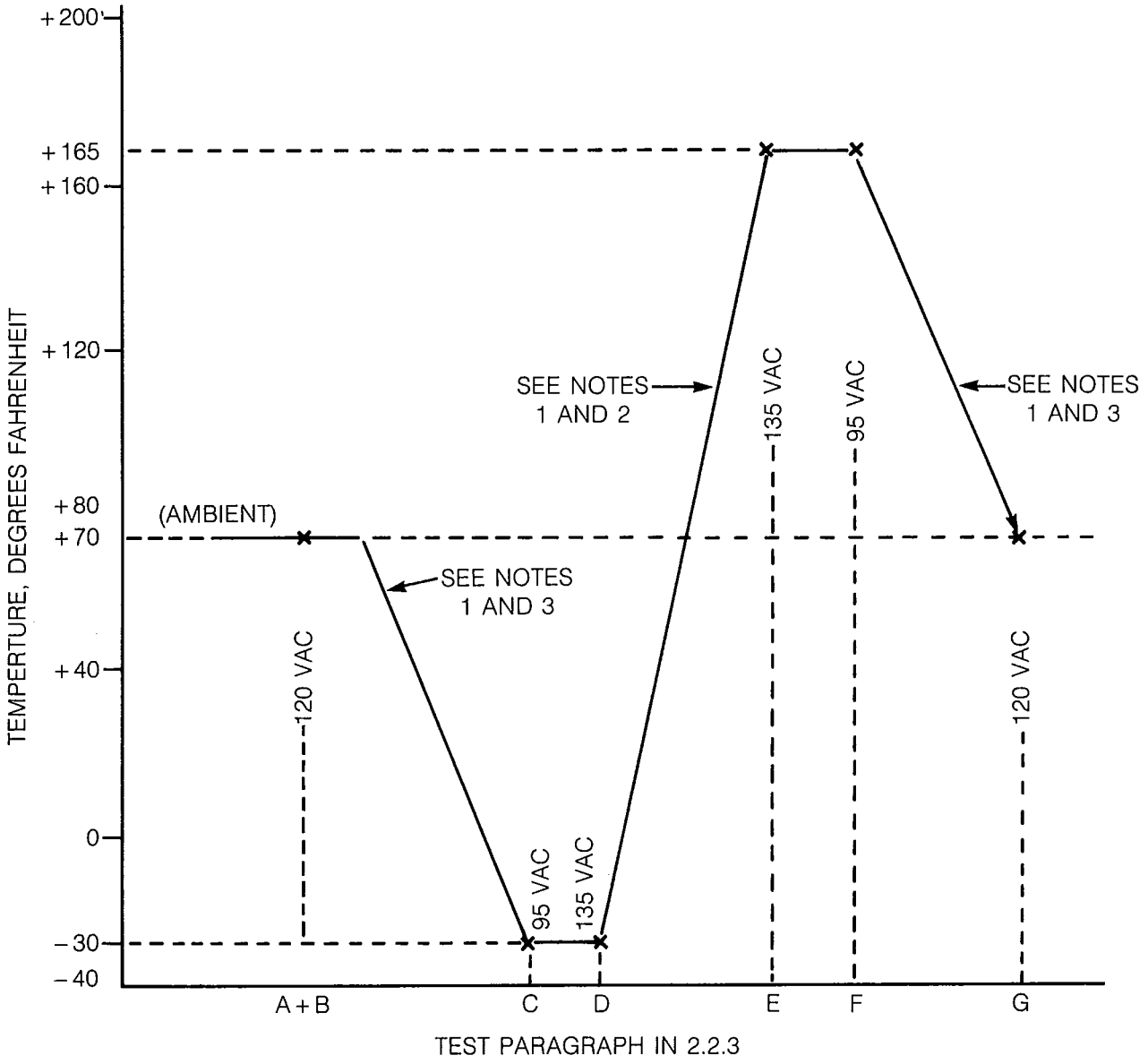

NOTE 1—The rate of change in temperature shall not exceed 30 °F (170 °C) per hour.

NOTE 2—Humidity controls shall be set in conformance with the humidities given in Table 2-1, Page 2, during the temperature change between Test D and Test E.

NOTE 3—If a change in both voltage and temperature are required for the next test, the voltage shall be selected prior to the temperature change.

Figure 2-2
ENVIRONMENTAL TEST PROFILE

Copyright National Electrical Manufacturers Association
Provided by IHS under license with NEMA
No reproduction or networking permitted without license from IHS
Not for Resale

7. Program the controller unit to cycle on minimum recall. Turn on the transient generator (output in accordance with item 5) and apply its output to the selected input/output terminations. The controller unit shall continue to cycle without malfunction.

8. Set a transient generator to provide low-repetition high-energy transients as follows:

a. Amplitude—600 volts ±5 percent, both positive and negative polarity.

b. Energy discharge source—capacitor, oil-filled, 10 microfarads.

c. Repetition rate—one discharge each 10 seconds.

d. Pulse position—random across 360 degrees of line cycle.

9. Program the controller unit so it will dwell in a selected phase—120 volts alternating-current input from the variable-voltage power transformer.

10. Discharge the oil-filled 10-microfarad capacitor ten times for each polarity across the alternating-current voltage input. Repeat this test for the condition of dwell for each phase of the controller unit. The controller unit shall continue to dwell in the selected phase without incidence of false calls or indications.

11. Program the controller unit to cycle on minimum recall. Discharge the capacitor ten times for each polarity while the controller is cycling on minimum recall, during which time the controller unit shall continue to cycle without malfunction.

12. During the preceding transient tests (items 3 through 11), the controller must continue its programmed functions. The controller shall not skip intervals or phases when cycling; place false calls or produce false indications while in dwell; disrupt normal sequences in any manner; or change timings.

13. Non-destruct Transient Immunity:

a. Turn off the alternating-current power input to the test unit from the variable-voltage power source.

b. Apply the following high-energy transient to the alternating-current voltage input terminals of the controller unit (no other power connected to terminals):

(1) Amplitude—1000 volts, both positive and negative polarity.

(2) Peak power discharge—capacitor, oil-filled, 15 microfarads.

(3) Repetition rate—applied to the controller assembly once every 2 seconds for a maximum of three applications for each polarity.

c. Upon completion of the foregoing, apply 120 volts alternating-current to the controller assembly and verify that the controller unit goes through its prescribed start-up sequence and cycles properly in accordance with the programmed functions. The first operation of the over-current protective device during this test shall not be considered a failure of the controller assembly.

Upon satisfactory completion of this test, reconnect the surge protector and line filters and proceed to Test C.

NOTE—Tests C through G follow the profile indicated in Figure 2-2 to demonstrate the ability of the controller assembly to function reliably under stated conditions of temperature, voltage and humidity.

2.2.3.3 Test C—Low-temperature Low-voltage Tests

1. Definition of Test Conditions—
   a. Environmental chamber door—closed.
   b. Temperature—minus 30°F (minus 34°C).
   c. Low voltage—95 volts alternating current.
   d. Equipment cabinet door—open.
   e. Humidity control—off.

2. Test Procedure—While at room temperature, adjust the input voltage to 95 volts alternating current and verify that the test unit is still operable.

a. With the test equipment cycling on minimum recall, lower the test chamber to −30°F (−34°C) at a rate not exceeding 30°F (17°C) per hour. Allow the test specimen to cycle on minimum recall for a minimum of 5 hours at −30°F (−34°C) with the humidity controls in the off position. Then operate the test switches as necessary to determine that all functions are operable.

b. Power shall then be removed from the controller assembly for a period of 5 hours. Upon restoration of power, the controller assembly shall resume cycling.

c. With the controller assembly at −30°F (−34°C) and the input voltage at 95 volts alternating current, the following items shall be evaluated against their respective standards:

2.2.7 Power Interruption Tests
2.2.8 Timing Accuracy Tests
2.2.8.2 Repeatability
2.2.9 Signal Conflict Monitoring Tests

All input/output functions as required by the specific controller assembly application shall be tested.

Upon satisfactory completion of this test, proceed to Test D.

2.2.3.4 Test D—Low-temperature High-voltage Tests

1. Definition of Test Conditions—
   a. Environmental chamber door—closed.
   b. Low temperature—minus 30°F (minus 34°C).
   c. High voltage—135 volts alternating current.
   d. Equipment cabinet door —open.
   e. Humidity controls—off.

Copyright National Electrical Manufacturers Association
Provided by IHS under license with NEMA
No reproduction or networking permitted without license from IHS

Not for Resale

2. Test Procedure—While at −30°F (°34°C) and with humidity controls off, adjust the input voltage to 135 volts alternating current and allow the test specimen to cycle for 1 hour on minimum recall. Then operate the test switches as necessary to determine that all functions are operable.

3. With the controller assembly at −30°F (−34°C) and the input voltage at 135 volts alternating current (humidity controls off), the following items shall be evaluated against their respective standards:

2.2.7 Power Interruption Tests
2.2.8 Timing Accuracy Tests
2.2.8.2 Repeatability
2.2.9 Signal Conflict Monitoring Tests

All input/output functions as required by the specific controller assembly application shall be tested.

Upon satisfactory completion of this test, proceed to Test E.

2.2.3.5 Test E—High-temperature High-voltage Tests

1. Definition of Test Conditions—
   a. Environmental chamber door—closed.
   b. High temperature—± 165°F (74°C).
   c. High voltage—135 volts alternating current.
   d. Equipment cabinet door—open.
   e. Humidity controls—in accordance with the humidities given in Table 2-1.

2. Test Procedure—With the equipment under test cycling on minimum recall, raise the test chamber to 165°F (74°C) at a rate not to exceed 30°F (17°C) per hour. Check to see that the input voltage is set at 135 volts alternating current. Set the humidity controls to not exceed 95 percent relative humidity over the temperature range of +40°F (4.4°C) to +110°F (43.3°C). When the temperature reaches 109°F (43°C), readjust the humidity control to maintain constant absolute humidity—109°F (43°C) wet bulb which results in the relative humidities shown in Table 2-1. Verify that the controller assembly continues to cycle satisfactorily during the period of temperature increase and at established levels of relative humidity.

   a. Allow the test unit to cycle on minimum recall for a minimum of 15 hours at 165°F (74°C) and 18 percent relative humidity. Then operate the test switches as necessary to determine that all functions are operable.

   b. With the controller assembly at 165°F (74°C) and 18 percent relative humidity and the input voltage at 135 volts alternating current, the following items shall be evaluated against their respective standards:

2.2.7 Power Interruption Tests
2.2.8 Timing Accuracy Tests
2.2.8.2 Repeatability
2.2.9 Signal Conflict Monitoring Tests

All input/output functions as required by the specific controller assembly application shall be tested.

Upon satisfactory completion of this test, proceed to Test F.

2.2.3.6 Test F—High-temperature Low-voltage Tests

1. Definition of Test Conditions—
   a. Environmental chamber door—closed.
   b. High temperature—165°F (74°C).
   c. Low voltage —95 volts alternating current.
   d. Equipment cabinet door—open.
   e. Humidity controls—18 percent relative humidity and 109°F (43°C) wet bulb.

2. Test Procedure—Adjust the input voltage to 95 volts alternating current as indicated on the voltmeter and proceed to operate the test switches to determine that all functions are operable. With the controller assembly at 165°F (74°C) and 18 percent relative humidity—109°F (43°C) wet bulb—and the input voltage at 95 volts alternating current, the following items shall be evaluated against their respective standards:

2.2.7 Power Interruption Tests
2.2.8 Timing Accuracy Tests
2.2.8.2 Repeatability
2.2.9 Signal Conflict Monitoring Tests

All input/output functions as required by the specific controller assembly application shall be tested.

Upon satisfactory completion of this test, proceed to Test G.

2.2.3.8 Test G—Test Termination

1. Program the controller unit to cycle on maximum recall.

2. Adjust the input voltage to 120 volts alternating current.

3. Set the controls on the environmental chamber to return to room temperature—60°F to 80°F (15°C to 27°C)—with the humidity controls in the off position. The rate of temperature change shall not exceed 30°F (17°C) per hour.

4. Verify that the controller unit continues to cycle properly.

5. Allow the equipment under test to stabilize at room temperature for 1 hour. Proceed to operate the test switches to determine that all functions are operable.

Copyright National Electrical Manufacturers Association
Provided by IHS under license with NEMA
No reproduction or networking permitted without license from IHS
Not for Resale

2.2.3.9 Test H—Appraisal of Equipment Under Test

1. A failure shall be defined as any occurrence which results in other than normal operation of the equipment. (See item 2 for details.) If a failure occurs, the equipment shall be repaired or components replaced, and the test during which failure occurred shall be restarted from its beginning.

2. The equipment under test is considered to have failed if any of the following occur:

a. If the controller unit skips intervals or phases, places false calls, presents false pilot light indications, exhibits disruption of normal sequence, or produces changes in timing beyond specified tolerances, or

b. If the load switches produce incorrect signal indications, or

c. If the signal conflict monitor fails to satisfy the requirements of 2.2.9 or

d. If the equipment under test fails to satisfy the requirements of 2.2.3 Tests A to G, inclusive.

3. An analysis of the failure shall be performed and corrective action taken before equipment is retested in accordance with this standard. The analysis must outline what action was taken to preclude additional failures during the tests.

4. When the number of failures exceeds two, it shall be considered that the equipment fails to meet these standards. The equipment may be *completely* retested after analysis of the failure and necessary repairs have been made in accordance with item 3.

5. Upon completion of the tests, the equipment shall be visually inspected. If material changes are observed which will adversely affect the life of the equipment, the cause and conditions shall be corrected before making further tests.

6. Upon satisfactory completion of all of the tests described in 2.2.3.1 through 2.2.3.8, the equipment shall be tested in accordance with 2.2.4.

NEMA Standard 4-7-1983.

2.2.4 Test Procedure—Cabinet Ventilation

2.2.4.1 Placement in Environmental Chamber

1. The test circuit remains the same as that used in the previous tests (see Fig. 2-1) with the surge protector and line filters connected.

2. The door of the weatherproof equipment cabinet shall be closed for these tests. However, before closing the door, verify the test hook-up by adjusting the input voltage to 120 volts alternating current and applying power to the test unit. Verify that the controller unit goes through its prescribed start-up sequence and cycles properly in accordance with the operation determined by the positioning of the test switches. Determine that operation of the test lamps is in agreement with the controller unit sequencing and in accordance with the specified operation.

3. Check that the interval timing for each phase has been programmed at convenient durations to allow sufficient viewing time (at lamp loads) and yet not to result in an unnecessarily long cycle time. Set each phase of the controller unit on minimum recall.

Add sufficient load within the cabinet to raise the power consumption of the controller unit plus the dummy load to 400 watts.

4. Four thermocouples shall be located in the free space within the upper one third of the equipment cabinet to monitor the maximum ambient temperature inside the cabinet. These thermocouples shall be placed at least 1 inch from any equipment or cabinet surface. The average of the two highest temperatures recorded on the four thermocouples shall be used as the ambient temperature for all tests.

5. Close the equipment cabinet door. Make certain that it is latched and that the cabinet is otherwise representative of "street-corner" use. If forced-air cooling (or other means of venting) is provided as a part of the complete controller assembly, it shall be operable during this test.

6. Close the door of the environmental test chamber.

2.2.4.2 Test for Adequate Cabinet Ventilation

1. With the controller unit cycling on minimum recall and the equipment cabinet door closed, verify that the test unit is cycling in accordance with the operation determined by test switches.

2. With humidity controls turned "off", raise the ambient temperature of the test chamber to 122°F (50°C) at a rate not to exceed 30°F (17°C) per hour.

3. Allow the controller assembly to continue to cycle for a period of time sufficient to obtain a stable temperature within the equipment cabinet. Temperature stability shall be determined by registration of the same temperature, within a ±5°F (3°C), as measured by the method specified in 2.2.4.1(1), recorded at 1-hour intervals.

4. The maximum ambient temperature inside the equipment cabinet shall not exceed 145°F (63°C) to allow for an additional temperature rise due to solar radiation.

5. Set controls on the environmental test chamber to return to room temperature 60°F to 80°F (15°C to 27°C) with the humidity control off. The rate of temperature change shall not exceed 30°F (17°C) per hour.

Copyright National Electrical Manufacturers Association
Provided by IHS under license with NEMA
No reproduction or networking permitted without license from IHS
Not for Resale

6. Allow the controller assembly to stabilize at room temperature for 1 hour. Proceed to operate the test switches to determine that all functions are operable.

7. Terminate the tests, and remove the equipment from the environmental test chamber.

2.2.4.3 Test Termination

1. Upon determining that the maximum temperature inside the equipment cabinet does not exceed 145°F (63°C) this test can be considered to have been concluded satisfactorily. In such a case the equipment shall be tested in accordance with 2.2.5.

2. If the maximum ambient temperature exceeds 145°F (63°C), an analysis shall be performed and corrective action taken before any similar controller assembly can be retested in accordance with this standard. The corrective action must outline the action taken to remove cause of failure.

NEMA Standard 11-6-1975.

2.2.5 Vibration Test

2.2.5.1 Purpose of Test

This test is intended to duplicate vibrations encountered by the controller assembly when installed at its "street-corner" location. Due to the impracticability of vibrating the entire controller assembly, this test is established to vibrate each major segment of the system individually, e.g., as follows, but not limited to:

1. Controller unit.
2. Signal conflict monitor unit.
3. Load switching assembly.

a. When the size of the equipment cabinet permits, it may be vibrated as a matter of convenience to include the load switching assembly.

b. When the size of the equipment cabinet does not permit vibrating it, the load switching assembly (commonly referred to as the "load switching and power distribution panel") may be removed and vibrated as a separate unit with the panel surface-mounted in the same plane as in normal use.

Each major segment shall be fastened securely to the vibration test table prior to the start of the test.

2.2.5.2 Test Equipment Requirements

1. Vibration table with adequate table surface area to permit singular placement of the major segments of the test system.

2. Vibration table shall consist of:

a. Vibration in each of three mutually perpendicular planes.

b. Adjustment of frequency of vibration over the range from 5 to 30 hertz.

c. Adjustment of test table excursion (double amplitude displacement) to maintain a G value, measured at the test table, of 0.5G—as determined by the following formula:

$$G = 0.0511\ d\ f^2$$

Where—
d = excursion in inches
f = frequency in cycles per second

2.2.5.3 Resonant Search

1. With equipment under test (a major segment of the system as defined in 2.2.5.1) securely fastened to the test table, set the test table for a double amplitude displacement of 0.015 inch.

2. Cycle the test table over a search range from 5 to 30 cycles per second and back within a period of 12–1/2 minutes.

3. Conduct the resonant frequency search in each of the three mutually perpendicular planes.

4. Note and record the resonant frequency determined from each plane.

a. In the event of more than one resonant frequency in a given plane, record the most severe resonance.

b. If resonant frequencies appear equally severe, record both resonant frequencies.

c. If no resonant frequency occurs for a given plane within the prescribed range, 30 cycles per second shall be recorded.

2.2.5.4 Endurance Test

1. Vibrate the equipment under test in each plane at its resonant frequency for a period of 1 hour at an amplitude resulting in 0.5G acceleration.

2. When more than one resonant frequency has been recorded in accordance with 2.2.5.3(4), the test period of 1 hour shall be divided equally between the resonant frequencies.

3. The total time of the endurance test for a given major segment of the controller assembly shall be limited to 3 hours—1 hour in each of three mutually perpendicular planes.

4. Repeat 2.2.5.3 and 2.2.5.4 for each major segment of the controller assembly.

2.2.5.5 Disposition of Equipment Under Test

1. The equipment under test shall be examined carefully to determine that no physical damage has resulted from the vibration tests.

Copyright National Electrical Manufacturers Association
Provided by IHS under license with NEMA
No reproduction or networking permitted without license from IHS
Not for Resale

2. The equipment under test shall be carefully checked to determine that it is functionally operable in all modes of its prescribed operation.

3. The equipment under test may be removed from the test table. Upon satisfactory completion of the vibration test, proceed with the shock (impact) test described in 2.2.6.

NEMA Standard 11-6-1975.

2.2.6 Shock (Impact) Test

2.2.6.1 Purpose of Test

The purpose of this test is to determine that the major segments of the controller assembly are capable of withstanding the shock (impact) to which such equipment may reasonably be subjected during handling and transportation in the process of installation, repair, and replacement. It is to be noted that the equipment is not, at this time, in its shipping carton. The major segments of the system are exemplified by, but not limited to, the following:

1. Controller unit.
2. Signal conflict monitor unit.
3. Load switching unit.

Each major segment shall be firmly fastened to the specimen table. In each of its three planes the specimen shall be dropped from a calibrated height to result in a shock force of 10G's.

2.2.6.2 Test Equipment Requirements

1. Shock (impact) test fixture equivalent to that suggested by the simplified sketch shown in Figure 2-3.

2. The test table shall have a surface area sufficient to accommodate the various items listed as major segments of the controller assembly.

3. The test table shall be calibrated and the items tested as indicated. This shock test defines the test shock to be 10 G ±1G.

a. Calibration of the test equipment for these shock tests shall be measured by three accelerometers having fixed shock settings of 9G, 10G and 11G. They shall be Inertia Switch Incorporated's ST-355, or the equivalent. These devices shall be rigidly attached to the test table.

b. Calibration of the fixture for each item to be tested shall be as follows:

(1) Place a dummy load weighing within 10 percent of the item to be tested on the test table.

(2) Reset the three accelerometers and drop the test table from a measured height.

(3) Observe that the accelerometers indicate the following:

(a) The 9G acclerometer shall be activated.

(b) The 10G unit may or may not be actuated.

(c) The 11G unit shall not be actuated.

c. Repeat calibration tests (a) and (b), adjusting the height of the drop until, on ten successive drops, the following occurs:

(1) The 9G unit is actuated ten times.

(2) The 10G unit is actuated between four to eight times.

(3) The 11G unit is not actuated on any of the ten drops.

2.2.6.3 Test Procedure

1. The calibration height of the drop for the particular item under test as determined in 2.2.6.2 shall be used in this procedure.

2. Secure the item under test to the test table surface so that the test item rests on one of its three mutually perpendicular planes.

3. Raise the test table to the calibrated height.

4. Release the test table from the calibrated height, allowing a free fall into the box of energy absorbing material below.

5. Repeat the drop test for each of the remaining two mutually perpendicular planes, using the same calibrated height for each drop test of the same item under test.

6. The observations of the accelerometer for the three tests of the test item shall be:

(a) The 9G unit is actuated for all three tests. (Repeat the calibration if the unit is not actuated.)

(b) The 10G unit may or may not be actuated in these tests.

(c) The 11G unit is not actuated on any drop. (If the unit is actuated, repeat the calibration only if the equipment has suffered damage.)

22.6.4 Disposition of Test Unit

1. Check the test unit for any physical damage resulting from the drop tests.

2. Check the test unit carefully to determine that it is functionally operable in all modes of its prescribed operation.

3. Satisfactory completion of all environmental tests, including the shock (impact), is required for solid-state controller assemblies.

NEMA Standard 11-6-1975.

2.2.7 Power Interruption Tests

The following power interruption tests shall be conducted at low input voltage (95 volts alternating current) and high input voltage (135 volts alternating-current) at each stabilized temperature, i.e., room temperature, −30°F (−34°C), and +165°F (+74°C).

Copyright National Electrical Manufacturers Association
Provided by IHS under license with NEMA
No reproduction or networking permitted without license from IHS
Not for Resale

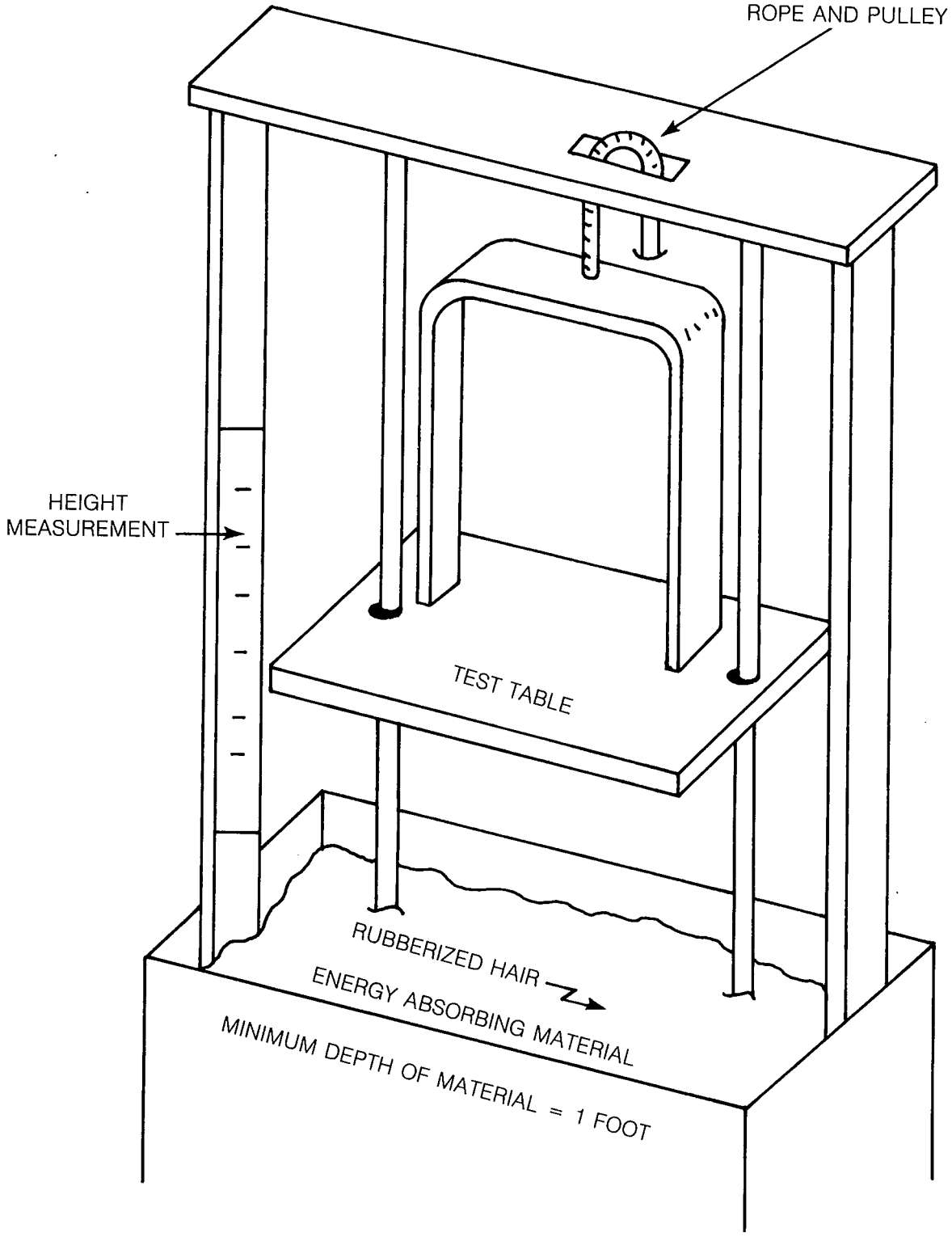

Figure 2-3
TEST FIXTURE (TYPICAL) FOR SHOCK TESTING

Copyright National Electrical Manufacturers Association
Provided by IHS under license with NEMA
No reproduction or networking permitted without license from IHS
Not for Resale

2.2.7.1 500-MILLISECOND POWER INTERRUPTION

Place vehicle calls on all phases and, while the controller unit is cycling, remove the input voltage for a period of 500 milliseconds. Upon restoration of the input voltage, check to insure that the controller unit continues normal operation as though no power interruption has occurred. Repeat this test three times.

2.2.7.2 1000-MILLISECOND POWER INTERRUPTION

Place vehicle calls on all phases and, while the controller unit is cycling, remove the input voltage for a period of 1000 milliseconds. Upon restoration of the input voltage, check to insure that the controller unit reverts to its start-up sequence. Repeat this test three times.

NEMA Standard 11-6-1975.

2.2.8 Timing Accuracy Tests

The following intervals (or interval portions, when provided) shall be timed as specified in the following procedure:

INITIAL, EXTENSION, MAXIMUM, YELLOW CHANGE, RED CLEARANCE, WALK AND PEDESTRIAN CLEARANCE.

2.2.8.1 SETABILITY (AT ROOM TEMPERATURE ONLY) (See 2.2.3.3)

In all cases (analog or digital), the range of timing shall, as a minimum requirement, be as shown in 4.3.1 or 14.3.1.

The range of timing and setability requirements shall be in accordance with the functional standards given in this publication for the specific controller unit under test.

1. Analog—Analog controller units shall be tested for setability in accordance with steps a through f.

a. Each type of interval (or portion of interval) shall be set on at least one time setting control of the controller unit, using the following suggested time settings:

(1) Initial ..... 4 seconds
(2) Extension (gap) ..... 3 seconds
(3) Maximum ..... 60 seconds
(4) Yellow change ..... 3 seconds
(5) Red clear ..... 4 seconds
(6) Walk ..... 12 seconds
(7) Pedestrian clear ..... 16 seconds

b. Select the phase to be timed, and measure and record the selected interval timing as indicated by the digital time indicator.

c. After recording the measured time of each selected interval once, these same intervals shall be reset to the same selected interval time as before, but starting each setting from a random remote setting in order to check the ability to reset the control to the same selected time. This process shall be repeated until a total of ten measured times has been obtained for each selected interval.

d. The longest observed time for each interval shall be noted as X_L. Similarly, the shortest observed time for each interval shall be noted as X_S.

e. Substitute the value of X_L for each tested interval in the following formulae where S = the selected time setting. Determine that the maximum deviation above the selected time setting does not exceed +5 percent of the dial setting (equation 1) or +½ second (equation 2), whichever allows the greater variation.

$$\left(\frac{X_L - S}{S}\right) \times 100 =< +5 \text{ percent}$$

(Equation 1)

$$X_L - S =< +\tfrac{1}{2} \text{ second}$$

(Equation 2)

f. Substitute the value of X_S for each tested interval in the following formulae where S = the selected time setting. Determine that the maximum deviation below the selected time setting does not exceed −5 percent of the dial setting (equation 3) or −½ second (equation 4), whichever allows the greatest variation.

$$X_S - S \times 100 =< -5 \text{ percent}$$

(Equation 3)

$$X_S - S =< -\tfrac{1}{2} \text{ second}$$

(Equation 4)

2. Digital—Determine, with reference to the controller unit, that setting of the interval time has been provided in positive discrete increments in accordance

Copyright National Electrical Manufacturers Association
Provided by IHS under license with NEMA
No reproduction or networking permitted without license from IHS
Not for Resale

with the functional standards given in this publication for the specific controller unit under test.

2.2.8.2 Repeatability (Analog or Digital)

(At all stabilized temperatures specified in 2.2.3.2 through 2.2.3.8).

1. As a minimum the following intervals (or interval portions) shall be timed for each phase:

   INITIAL, EXTENSION, YELLOW CHANGE AND RED CLEARANCE.

2. Each interval shall be timed with the digital time indicator for ten consecutive cycles for one given setting of each interval.
3. The ten timings for each interval shall be averaged to obtain X_{AV}.
4. Substitution in equation 5 and 6, where S = the selected time setting, shall determine that the deviation does not exceed:

For Analog— ± 5 percent of dial setting or ± ½ second, whichever allows greater variation.

For Digital—The digital timing shall relate to the input line frequency so that no cumulative or drift error will occur in timing intervals. Any interval timed by a digital controller shall not deviate by more than ± 100 milliseconds from its set value.

$$\left(\frac{X_{AV}-S}{S}\right) \times 100 =< \pm 5 \text{ percent for analog}$$

(Equation 5)

or

$$X_{AV} - S =< \pm \tfrac{1}{2} \text{ second for analog}$$

$$=< \pm 100 \text{ milliseconds for digital}$$

(Equation 6)

NEMA Standard 11-6-1975.

2.2.9 Signal Conflict Monitoring Tests

Various conflicting signal indications shall be simulated to insure that the conflict monitor is effective in sensing conflicting signal conditions.

2.2.9.1 Test Equipment Requirements

1. Variable-voltage transformer capable of providing a conflict test voltage variable from 0 to 135 volts alternating-current; 5 amperes minimum capacity.
2. Test probe to provide a convenient means of applying the test voltage specified in item 1 to selected test lamps which are representative of conflicting signal indications.
3. Root-mean-square voltmeter to provide a means of detecting a conflict test voltage of 0 to 150 volts alternating current. The voltmeter shall measure true average voltages and shall be calibrated to read equivalent "rms" assuming sine wave voltages.
4. Time switch to control the period of the applied conflict test voltage.

2.2.9.2 Test Circuit

Test equipment shall be connected in accordance with Figure 2-4.

2.2.9.3 Test Procedure

1. Select any phase from the controller unit (e.g., Phase 1). Operate the test switches so as to cause the controller unit to dwell in the desired indication of the selected phase as evidenced by the ON condition of the test lamp corresponding to the selected phase.
2. Conflict test voltage, as outlined in Steps 3 through 6, shall be applied to the test lamp of a phase known to be in conflict with the legitimate phase indication selected in Step 1. These tests shall be conducted at low and high input voltages at each stabilized temperature.
3. Set Switch #1 to "full wave" and adjust the variable-voltage power transformer to provide a conflicting test voltage of 15 volts alternating current for a duration of 5 seconds to the test point of the conflicting phase. The signal conflict monitor *shall not* detect the conflict.
4. Set Switch #1 to "full wave" and adjust the variable-voltage power transformer to provide a conflicting test voltage of 25 volts alternating current to the test point of the conflicting phase. The signal conflict monitor *shall not* detect a conflict of less than 200 milliseconds but *shall* detect a conflict greater than 450 milliseconds.
5. Set Switch #1 to "positive half wave" and adjust the variable-voltage power transformer to provide a conflicting test voltage of 25 volts alternating current to the test point of the conflicting phase. The signal conflict monitor *shall not* detect a conflict of less than 200 milliseconds but *shall* detect a conflict greater than 450 milliseconds.
6. Repeat Step 5 with Switch #1 in "negative half wave" position.
7. The tests specified in Steps 3 through 6 shall be conducted on a minimum of one conflicting phase.

NEMA Standard 4-7-1983.

Copyright National Electrical Manufacturers Association
Provided by IHS under license with NEMA
No reproduction or networking permitted without license from IHS
Not for Resale

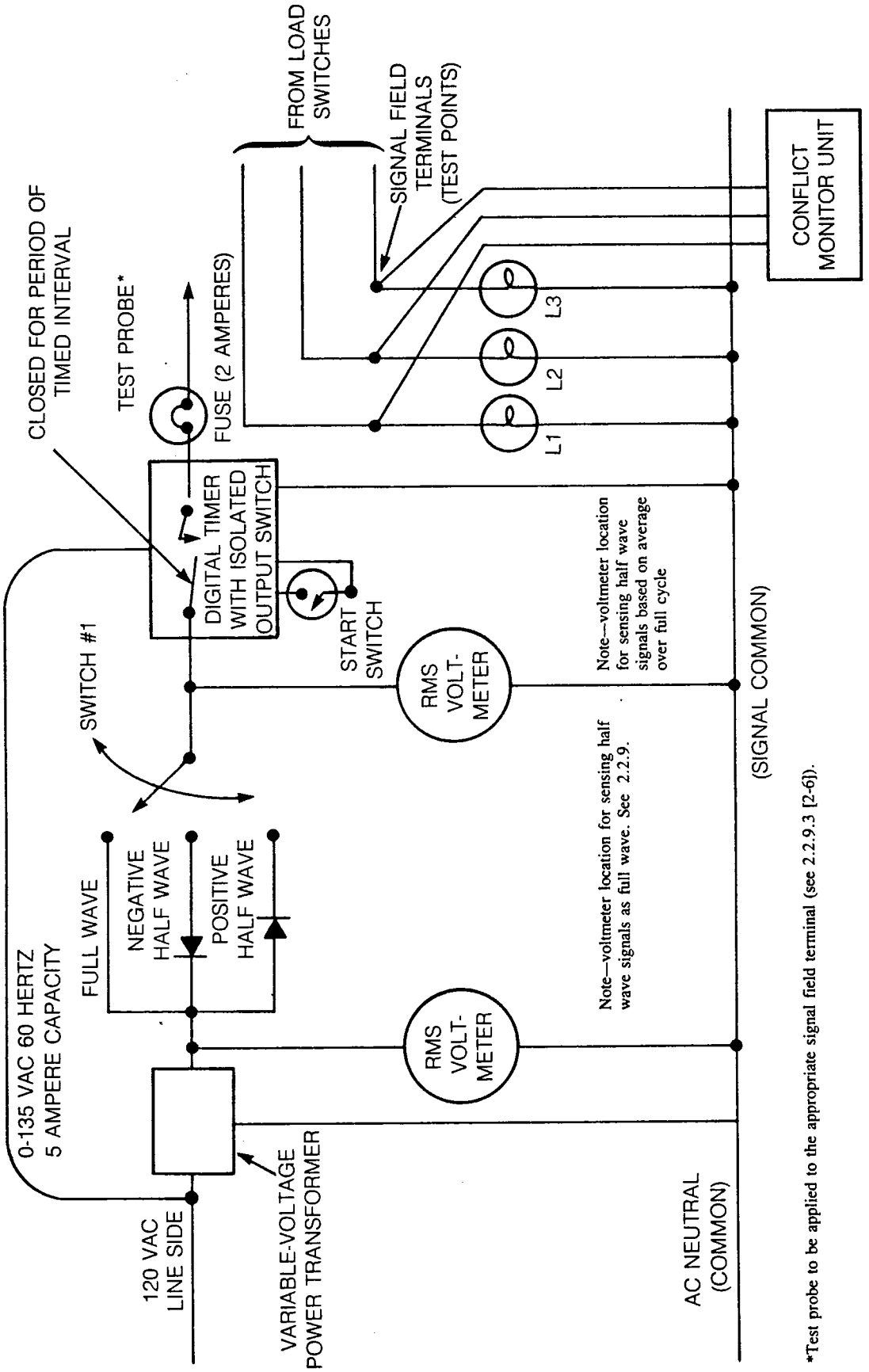

*Test probe to be applied to the appropriate signal field terminal (see 2.2.9.3 [2-6]).

Figure 2-4
SIGNAL CONFLICT MONITOR TEST UNIT CIRCUIT

Copyright National Electrical Manufacturers Association
Provided by IHS under license with NEMA
No reproduction or networking permitted without license from IHS
Not for Resale

Section 3
INTERFACE STANDARDS FOR TWO-PHASE THROUGH EIGHT-PHASE SOLID-STATE TRAFFIC SIGNAL CONTROLLER UNITS

The standards in Section 3 respond to the need for the interchangeability of solid-state controller units. They represent generally available traffic control equipment.

Interchangeability of equipment manufactured in conformance with these standards has been achieved by connector plug compatibility.

With the objective of attaining compatibility with future equipment, these standards have been developed with significant consideration of the configurations which future equipments are likely to assume. Accordingly, provisions have been made for a number of additional input and output terminations so that plug compatibility with future designs can be obtained.

Section 3 defines interface requirements for a class of solid-state vehicle-actuated controller units with input-output spares for future use.

3.1 INTERFACE REQUIREMENTS

Input-output terminations shall be provided for the functions described in Section 4.

If additional input-output terminations are required to allow for the inclusion of additional functional capabilities, such terminations shall be provided on an additional connector, which *shall not* be interchangeable with another connector on the face of the controller unit. The provision of these additional functional capabilities shall not modify the operating capabilities of the controller unit when the additional input-output connector is disconnected.

NEMA Standard 11-6-1975.

3.2 ELECTRICAL LIMITS OF INPUT-OUTPUT TERMINATIONS

3.2.1 Logic Levels

All logic signals shall be low state (nominal 0 volts) for the TRUE (operate) state of all input and output terminations. Input-output terminations, when not activated, shall be internally biased to FALSE state (+24 volts direct current).

3.2.2 Transient Immunity

The operation of the controller unit shall not be affected during operation by the application to any input or output terminal of pulses having a duration of 10 microseconds, a positive or negative amplitude of 300 volts, and a maximum repetition rate of 1 pulse per second, using a pulse source having an output impedance of not less than 1 000 ohms and not greater than 10 000 ohms.

3.2.3 Inputs

Inputs shall have the following characteristics:

1. Transition zone of input circuitry from "low" state to "high" state (and vice versa) shall occur between 6 and 16 volts.

2. A voltage between 0 and 6 volts shall be considered the "low" state.

3. A voltage greater than 16 volts shall be considered the "high" state.

4. External transition from "low" state to "high" state (and vice versa) shall be accomplished within 0.1 millisecond.

5. Over the range 0 to 26 volts direct current, ±2 volts, the maximum current "in" or "out" of any input control terminal shall be less than 10 milliamperes. Input impedance shall not exceed 11 kilohms to 24 volts direct current, nor shall the surge impedance be less than 100 ohms resistance.

6. Any input signal which dwells in a defined logic state for less than 0.25 milliseconds shall not be recognized. Any input signal which dwells in a defined logic state for more than 35 milliseconds shall be recognized, provided successive similar logic state transitions do not occur less than 135 milliseconds apart.

3.2.4 Outputs

Electrical outputs shall have the following characteristics:

1. Regulated Output 24 Volts dc for External Use

a. Positive output 24 volts ±2 volts direct current regulated over an alternating current line voltage variation from 95 to 135 volts and from no-load to full-load.

b. Current capability shall be 500 milliamperes continuously with less than a 0.5 volt peak-to-peak ripple.

2. Output Circuits

a. Current sinking capability "low" state (true) shall be at least 200 milliamperes from inductive load.

b. Any external steady-state voltage which is applied to the output terminal shall not exceed +30 volts

Copyright National Electrical Manufacturers Association
Provided by IHS under license with NEMA
No reproduction or networking permitted without license from IHS
Not for Resale
PROBLEM HARD COPY

direct current nor shall it cause a flow of more than 3 milliamperes into the terminal when the output is in the high state.

c. "Low" state = 0 to 4 volts.

d. Maximum transition time = 0.1 millisecond.

e. "High" state impedance shall not exceed 11 kilohms to 24 volts direct current.

f. Any valid output signal shall dwell in a defined logic state for at least 50 milliseconds.

NEMA Standard 11-6-1975.

3.3 INPUTS AND NUMBER OF TERMINALS

Controller units shall have the following input functions and terminals as determined by the number of phases and rings in the controller unit.

Function	Number of Terminals Per Unit 2ϕ	3ϕ	4ϕ	8ϕ
1. Vehicle call detector (per phase)	2	3	4	8
2. Ped call detector (per phase)	2	3	4	8
3. AC+ (line side)	1	1	1	1
4. AC− (common)	1	1	1	1
5. Chassis ground	1	1	1	1
6. Logic ground	1	1	1	1
7. Force-off (per ring)	1	1	1	2
8. Hold (per phase)	2	3	4	8
9. Phase omit (per phase)	...	3	4	8
10. Stop timing (per ring)	1	1	1	2
11. Interval advance (per unit)	1	1	1	1
12. Red rest (per ring)	1	1	1	2
13. Inhibit max termination (per ring)	1	1	1	2
14. Call to nonactuated mode (two per unit)	2	2	2	2
15. Omit red clearance (per ring)	1	1	1	2
16. Test input (two per unit)	2	2	2	2
Total Number of Inputs	20	26	30	51

NEMA Standard 11-6-1975.

3.4 OUTPUTS AND NUMBER OF TERMINALS

Controller units shall have the following output functions and terminals as determined by the number of phases in the controller unit:

Function	Number of Terminals Per Unit 2ϕ	3ϕ	4ϕ	8ϕ
1. Load switch drivers, basic vehicle (G-Y-R, per phase)	6	9	12	24
2. Load switch drivers, pedestrian (W-PC-DW per phase)	6	9	12	24
3. Load switch drivers, overlap (G-Y-R, when provided)	...	9	12	12
4. Check (per phase)	2	3	4	8
5. Phase ON logic (per phase)	2	3	4	8
6. Phase NEXT logic (per phase)	...	3	4	8
7. Regulated 24 volts dc for external use	1	1	1	1
Total Number of Outputs	17	37	49	85

NEMA Standard 11-6-1975.

3.5 PIN CONNECTIONS

3.5.1 Connectors Used

Connectors shall be chosen from the MIL-C-26482 series.

Connector A shall intermate with a MS3116 ( ) -22-55S.

Connector B shall intermate with a MS3116 ( ) -22-55P.

Connector C shall intermate with a MS3116 ( ) -24-61P.

Controller Unit	Connector A	Connector B	Connector C
2 phase	X	...	...
3 phase	X	X	...
4 phase	X	X	...
5-8 phase	X	X	X

Copyright National Electrical Manufacturers Association
Provided by IHS under license with NEMA
No reproduction or networking permitted without license from IHS
Not for Resale

3.5.2 Totals of Terminations

Connections	Phases 2	3	4	8
Total inputs	20	26	30	51
Total outputs	17	37	49	85
Total inputs and outputs	37	63	79	136
Reserved for 4 and 8 phases	...	16	...	...
Spares*	3	8	8	9
Reserved for future use	14	22	22	25
Reserved†	1	1	1	1
Total Pins Required	55	110	110	171

* These spare terminations are reserved for the exclusive future assignment of such additional specific input-output functions as will be reflected in future revisions of this publication.

† These terminations are reserved to prevent interchangeability with controller units which conform to earlier proposed NEMA pin assignments.

3.5.3 Identification of Input-output Pin Connector Terminations

Input-output connector pin terminations shall be identified in accordance with Table 3-1.

NEMA Standard 11-6-1975.

Copyright National Electrical Manufacturers Association
Provided by IHS under license with NEMA
No reproduction or networking permitted without license from IHS
Not for Resale

Table 3-1
IDENTIFICATION OF INPUT/OUTPUT PIN CONNECTOR TERMINATIONS

2, 3, 4 and 8 Phase Connector A MS 3116-22-55P (55 pin)		3 Phase Connector B MS 3116-22-55S (55 pin)		4 Phase Connector B MS 3116-22-55S (55 pin)		8 Phase Connector B MS 3116-22-55S (55 pin)		8 Phase Connector C MS 3116-24-61S (61 pin)	
PIN	Function	PIN	Function	PIN	Function	PIN	Function	PIN	Function
A	RESERVED	A	Ø 1 PHASE NEXT	A	Ø 1 PHASE NEXT	A	Ø 1 PHASE NEXT	A	Reserved for Future Use
B	+24 VOLT DC EXTERNAL	B	SPARE 1	B	SPARE 1	B	SPARE 1	B	Reserved for Future Use
C	Reserved for Future Use	C	Ø 2 PHASE NEXT	C	Ø 2 PHASE NEXT	C	Ø 2 PHASE NEXT	C	Ø 8 DONT WALK DRIVER
D	Ø 1 RED	D	Ø 3 GREEN DRIVER	D	Ø 3 GREEN DRIVER	D	Ø 3 GREEN DRIVER	D	RED DRIVER
E	Ø 1 DONT WALK	E	Ø 3 YELLOW DRIVER	E	Ø 3 YELLOW DRIVER	E	Ø 3 YELLOW DRIVER	E	Ø 7 YELLOW DRIVER
F	Ø 2 RED	F	Ø 3 RED DRIVER	F	Ø 3 RED DRIVER	F	Ø 3 RED DRIVER	F	Ø 7 RED DRIVER
G	Ø 2 DONT WALK	G	RESERVED 4Ø 8Ø	G	Ø 4 RED DRIVER	G	Ø 4 RED DRIVER	G	Ø 6 RED DRIVER
H	Ø 2 PED CLEAR	H	RESERVED 4Ø 8Ø	H	Ø 4 PED CLEAR	H	Ø 4 PED CLEAR	H	Ø 5 RED DRIVER
J	Ø 2 WALK	J	REERVED 4Ø 8Ø	J	Ø 4 DONT WALK DRIVER	J	Ø 4 DONT WALK DRIVER	J	Ø 5 YELLOW DRIVER
K	Ø 2 VEHICLE CALL DET	K	RESERVED 4Ø 8Ø	K	Ø 4 CHECK	K	Ø 4 CHECK	K	Ø 5 PED CLEAR
L	Ø 2 PED CALL DET	L	RESERVED 4Ø 8Ø	L	Ø 4 VEHICLE CALL DET	L	Ø 4 VEHICLE CALL DET	L	Ø 5 DONT WALK DRIVER
M	Ø 2 HOLD	M	RESERVED 4Ø 8Ø	M	Ø $ PED CALL DET	M	Ø $ PED CALL DET	M	Ø 5 PHASE NEXT
N	STOP TIMING (1)	N	Ø 3 VEHICLE CALL DET	N	Ø 3 VEHICLE CALL DET	N	Ø 3Ø VEHICLE CALL DET	N	Ø 5 PHASE ON
P	INHIBIT MAX TERM (1)	P	Ø 3 PED CALL DET	P	Ø 3 PED CALL DET	P	Ø 3 PED CALL DET	P	Ø 5 VEHICLE CALL DET
R	Reserved for Future Use	R	Ø 3 PHASE OMIT	R	Ø 3 PHASE OMIT	R	Ø 3 PHASE OMIT	R	Ø 5 PED CALL DET
S	INTERVAL ADVANCE	S	Ø 2 PHASE OMIT	S	Ø 2 PHASE OMIT	S	Ø 3 PHASE OMIT	S	Ø 6 VEHICLE CALL DET
T	Reserved for Future Use	T	Reserved for Future Use	T	Reserved for Future Use	T	Reserved for Future Use	T	Ø 6 PED CALL DET
U	AC-(COMMON)	U	Ø 1 PHASE OMIT	U	Ø 1 PHASE OMIT	U	Ø 1 PHASE OMIT	U	Ø 7 PED CALL DET
V	CHASSIS GROUND	V	Reserved for Future Use	V	Reserved for Future Use	V	Reserved for Future Use	V	Ø 7 VEHICLE CALL DET
W	LOGIC GROUND	W	SPARE 2	W	SPARE 2	W	SPARE 2	W	Ø 8 PED CALL DET
X	Reserved for Future Use	X	SPARE 3	X	SPARE 3	X	SPARE 3	X	Ø 8 HOLD
Y	Reserved for Future Use	Y	Ø 3 WALK DRIVER	Y	Ø 3 WALK DRIVER	Y	Ø 3 WALK DRIVER	Y	FORCE-OFF (2)
Z	Ø 1 YELLOW	Z	Ø 3 PED CLEAR	Z	Ø 3 PED CLEAR	Z	Ø 3 PED CLEAR	Z	STOP TIMING (2)
a	Ø 1 PED CLEAR	a	Ø 3 DONT WALK DRIVER	a	Ø 3 DONT WALK DRIVER	a	Ø 3 DONT WALK DRIVER	a	INHIBIT MAX TERM (2)
b	Ø 2 YELLOW	b	RESERVED 4Ø 8Ø	b	Ø 4 GREEN DRIVER	b	Ø 4 GREEN DRIVER	b	SPARE 1
c	Ø 2 GREEN	c	RESERVED 4Ø 8Ø	c	Ø 4 YELLOW DRIVER	c	Ø 4 YELLOW DRIVER	c	Reserved for Future Use
d	Ø 2 CHECK	d	RESERVED 4Ø 8Ø	d	Ø 4 WALK DRIVER	d	Ø 4 WALK DRIVER	d	Ø 3 WALK DRIVER
e	Ø 2 PHASE ON	e	RESERVED 4Ø 8Ø	e	Ø 4 PHASE ON	e	Ø 4 PHASE ON	e	Ø 8 YELLOW DRIVER
f	Ø 1 VEHICLE CALL DET	f	RESERVED 4Ø 8Ø	f	Ø 4 PHASE NEXT	f	Ø 4 PHASE NEXT	f	Ø 7 GREEN DRIVER
g	Ø 1 PED CALL DET	g	RESERVED 4Ø 8Ø	g	Ø 4 PHASE OMIT	g	Ø 4 PHASE OMIT	g	Ø 8 GREEN DRIVER
h	Ø 1 HOLD	h	RESERVED 4Ø 8Ø	h	Ø 4 HOLD	h	Ø 4 HOLD	h	Ø 6 YELLOW DRIVER
i	FORCE OFF (1)	i	Ø 3 HOLD	i	Ø 3 HOLD	i	Ø 3 HOLD	i	Ø 5 GREEN DRIVER
j	Reserved for Future Use	j	Reserved for Future Use	j	Reserved for Future Use	j	Reserved for Future Use	j	Ø 5 WALK DRIVER
k	Reserved for Future Use	k	Reserved for Future Use	k	Reserved for Future Use	k	Reserved for Future Use	k	Ø 5 CHECK

(continued)

Copyright National Electrical Manufacturers Association
Provided by IHS under license with NEMA
No reproduction or networking permitted without license from IHS
Not for Resale

Table 3-1 (continued)

2, 3, 4 and 8 Phase Connector A MS 3116-22-55P (55 pin)		3 Phase Connector B MS 3116-22-55S (55 pin)		4 Phase Connector B MS 3116-22-55S (55 pin)		8 Phase Connector B MS 3116-22-55S (55 pin)		8 Phase Connector C MS 3116-24-61S (61 pin)	
PIN	Function	PIN	Function	PIN	Function	PIN	Function	PIN	Function
m	CALL TO NON ACT I	m	Reserved for Future Use	m	Reserved for Future Use	m	Reserved for Future Use	m	Ø 5 HOLD
n	TEST INPUT A	n	Reserved for Future Use	n	Reserved for Future Use	n	Reserved for Future Use	n	Ø 5 PHASE OMIT
p	AC+ (CONTROL)	p	OLA YELLOW DRIVER*	p	OLA YELLOW DRIVER *	p	OLA YELLOW DRIVER*	p	Ø 5 HOLD
q	SPARE 1	q	OLA RED DRIVER*	q	OLA RED DRIVER*	q	OLA RED DRIVER*	q	Ø 6 PHASE OMIT
r	Reserved for Future Use	r	Ø 3 CHECK	r	Ø 3 CHECK	r	Ø 3 CHECK	r	Ø 7 PHASE OMIT
s	Ø 1 GREEN	s	Ø 3 PHASE ON	s	Ø 3 PHASE ON	s	Ø 3 PHASE ON	s	Ø 8 PHASE OMIT
t	Ø 1 WALK	t	Ø 3 PHASE NEXT	t	Ø 3 PHASE NEXT	t	Ø 3 PHASE NEXT	t	Ø 8 VEHICLE CALL DET
u	Ø 1 CHECK	u	RESERVED 4Ø 8Ø	u	OLD RED DRIVER*	u	OLD RED DRIVER*	u	RED REST MODE (2)
v	Reserved for Future Use	v	SPARE 4	v	SPARE 4	v	SPARE 4	v	OMIT RED CLEAR (2)
w	OMIT RED CLEAR (1)	w	RESERVED 4Ø 8Ø	w	OLD GREEN DRIVER*	w	OLD GREEN DRIVER*	w	Ø 8 PED CLEAR
x	RED REST MODE (1)	x	Reserved for Future Use	x	Reserved for Future Use	x	Reserved for Future Use	x	Ø 8 GREEN DRIVER
y	SPARE 2	y	SPARE 5	y	SPARE 5	y	SPARE 5	y	Ø 7 DONT WALK DRIVER
z	CALL TO NON ACT II	z	Reserved for Future Use	z	Reserved for Future Use	z	Reserved for Future Use	z	Ø 8 DONT WALK DRIVER
AA	TEST INPUT B	AA	OLA GREEN DRIVER*	AA	OLA GREEN DRIVER*	AA	OLA GREEN DRIVER*	AA	Ø 6 PED CLEAR
BB	Reserved for Future Use	BB	Reserved for Future Use	BB	OLB YELLOW DRIVER*	BB	OLB YELLOW DRIVER*	BB	OLD YELLOW DRIVER*
CC	Reserved for Future Use	CC	OLB RED DRIVER*	CC	OLB RED DRIVER*	CC	OLB RED DRIVER*	CC	Ø 8 PHASE ON
DD	Ø 1 PHASE ON	DD	OLC RED DRIVER*	DD	OLC RED DRIVER*	DD	OLC RED DRIVER*	DD	Ø 8 PHASE NEXT
EE	Reserved for Future Use	EE	RESERVED 4Ø 8Ø	EE	OLD YELLOW DRIVER*	EE	OLD YELLOW DRIVER*	EE	Ø 7 HOLD
FF	Reserved for Future Use	FF	OLC GREEN DRIVER*	FF	OLC GREEN DRIVER*	FF	OLC GREEN DRIVER*	FF	Ø 8 CHECK
GG	Reserved for Future Use	GG	OLB GREEN DRIVER*	GG	OLB GREEN DRIVER*	GG	OLB GREEN DRIVER*	GG	Ø 8 PHASE ON
HH	SPARE 3	HH	OLC YELLOW DRIVER*	HH	OLC YELLOW DRIVER*	HH	OLC YELLOW DRIVER*	HH	Ø 8 PHASE NEXT
								JJ	Ø 7 WALK DRIVER
								KK	Ø 7 PED CLEAR
								LL	Ø 6 WALK DRIVER
								MM	Ø 7 CHECK
								NN	Ø 7 PHASE ON
								PP	Ø 7 PHASE NEXT

* When provided. If not provided, reserved.

NOTE—Numbers in parentheses ( ) refer to ring number.

Copyright National Electrical Manufacturers Association
Provided by IHS under license with NEMA
No reproduction or networking permitted without license from IHS

Not for Resale

Section 4
DEFINITIONS AND PHYSICAL AND FUNCTIONAL STANDARDS FOR BASIC TWO-PHASE THROUGH EIGHT-PHASE SOLID-STATE TRAFFIC SIGNAL CONTROLLER UNITS OF THE VEHICLE-ACTUATED TYPE

The standards in Section 4 respond to the need for the interchangeability of solid-state controller units. They represent generally available traffic control equipment.

Interchangeability of equipment manufactured in conformance with these standards has been achieved by connector plug compatibility.

With the objective of attaining compatibility with future equipment, these standards have been developed with significant consideration of the configurations which future equipments are likely to assume. Accordingly, provisions have been made for a number of additional input and output terminations so that plug compatibility with future designs can be obtained.

Section 4 covers two-phase through eight-phase controller units which are capable of providing all of the phase, ring, and unit functions as determined by the phase capacity of the controller unit. It is separated into the following three sections:

4.1 Definitions
4.2 Physical Standards
4.3 Functional Standards

4.1 DEFINITIONS

4.1.1 Barrier (Compatibility Line)

A reference point in the preferred sequence of a dual-ring controller unit at which both rings are interlocked.

Two reference points or barriers assure there will be no concurrent selection and timing of conflicting phases for traffic movement in different rings as illustrated by the following:

Both rings cross the barrier simultaneously to select and time phases on the other side.

NEMA Standard 11-6-1975.

4.1.2 Controller Unit

That portion of a controller assembly that is devoted to the selection and timing of traffic movements.

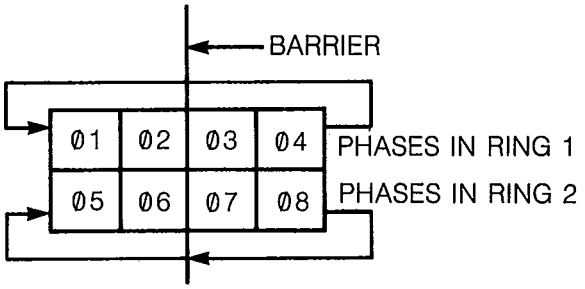

4.1.2.1 Single-Ring Controller Unit

A controller unit containing two or more sequentially timed and individually selected conflicting phases so arranged as to occur in an established order. The phases within a ring shall be numbered as illustrated by the following examples—

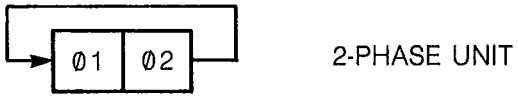

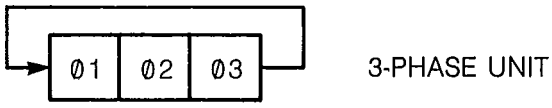

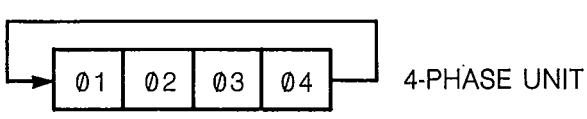

Copyright National Electrical Manufacturers Association
Provided by IHS under license with NEMA
No reproduction or networking permitted without license from IHS
Not for Resale

4.1.2.2 Dual-Ring Controller Unit

A controller unit containing two interlocked rings which are arranged to time in a preferred sequence and to allow concurrent timing of both rings, subject to the restraint in 4.1.1. The phases within the two timing rings shall be numbered as illustrated by the following example:

NEMA Standard 11-6-1975.

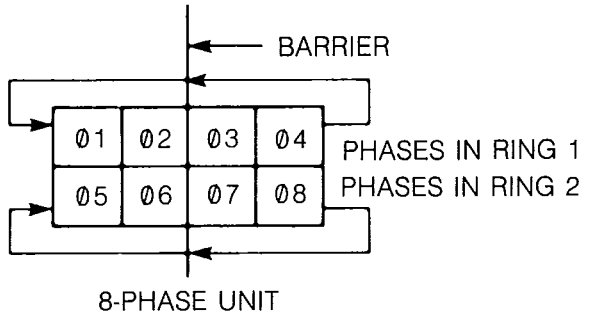

4.1.3 Entry

4.1.3.1 Dual Entry

A mode of operation (in a dual-ring controller unit) in which one phase in each ring must be in service. If a call does not exist in a ring when it crosses the barrier, a phase is selected in that ring to be activated by the controller unit in a predetermined manner. This is illustrated by the following example.

Example:

In the absence of calls on phases 7 and 8, phase 2 and phase 6 terminate to service a call on phase 3. Programming determines controller selection and the timing of phase 7 or phase 8 concurrent with phase 3.

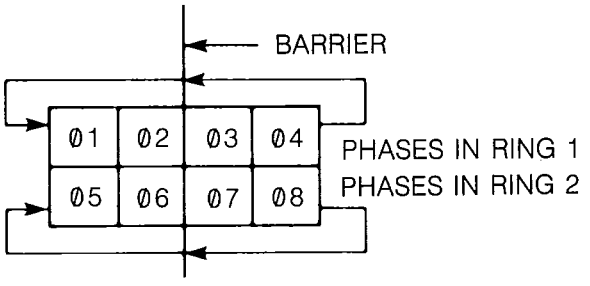

4.1.3.2 Single Entry

A mode of operation (in a dual-ring controller unit) in which a phase in one ring can be selected and timed alone if there is no demand for service in a nonconflicting phase on a parallel ring. This is illustrated by the following example:

Example:

After the termination of phase 2 and phase 6, the timer unit will be enabled to service a call on phase 3 in the absence of calls on either phase 7 or phase 8. While phase 3 is selected and timed alone, phases 7 and 8 in ring 2 will be red.

NEMA Standard 11-6-1975.

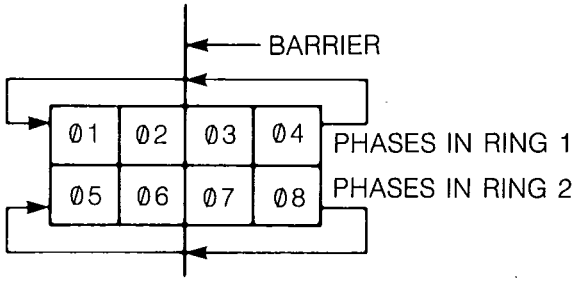

4.1.4 Pedestrian Recycle

Pedestrian recycle is any start of pedestrian service after the start of the associated phase GREEN.

NEMA Standard 11-6-1975.

4.1.5 Phase (Vehicular)

A phase which is allocated to vehicular traffic movement as timed by the controller unit.

4.1.5.1 Conflicting Phases

Two or more traffic phases which will cause interfering traffic movements if they are operated concurrently.

4.1.5.2 Nonconflicting Phases

Two or more traffic phases which will not cause interfering traffic movements if they are operated concurrently.

NEMA Standard 11-6-1975.

4.1.6 Preferred Sequence

The normal order of phase selection within a ring with calls on all phases, e.g.

NEMA Standard 11-6-1975.

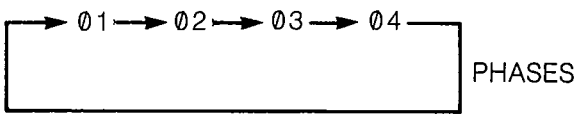

Copyright National Electrical Manufacturers Association
Provided by IHS under license with NEMA
No reproduction or networking permitted without license from IHS
Not for Resale

4.1.7 Timing, Concurrent

A mode of controller unit operation in which a traffic phase can be selected and timed simultaneously with and independently of another traffic phase.

NEMA Standard 11-6-1975.

4.2 PHYSICAL STANDARDS

4.2.1 Design

The controller unit shall be modular in design. Circuit boards shall be readily accessible for maintenance*.

NEMA Standard 11-6-1975.

*This can be accomplished by the use of extender boards.

Authorized Engineering Information 11-6-1975.

4.2.2 Printed Circuit Assemblies

All printed circuit boards shall be made from NEMA Grade G-10 glass epoxy or the equivalent (See NEMA Publication No. L1 1-1982, *Industrial Laminated Thermosetting Products*). Circuit boards exceeding 2 inches in any dimension shall have a nominal thickness of at least 1/16 inch. Circuit boards not exceeding 2 inches in any dimension shall have a nominal thickness of at least 1/32 inch.

Plated-through holes shall be plated with the equivalent of 1 ounce per square foot of copper. All circuit tracks shall be at least 2 ounces per square foot of copper. All electrical mating surfaces shall be made of noncorrosive material.

NEMA Standard 11-6-1975.

4.2.3 Connectors

Connectors on the controller unit shall be of the MIL-C-26482 series and shall be mounted on the front of the unit in accordance with the following:

Connector A shall intermate with a MS3116 ( ) - 22-55S

Connector B shall intermate with a MS3116 ( ) - 22-55P

Connector C shall intermate with a MS3116 ( ) - 24-61P

NEMA Standard 11-6-1975.

4.2.4 Frame Sizes

Maximum frame sizes* shall be:

Number of Phases	Dimension, Inches		
	Width	Height	Depth†
2	16	14	14 1/2
3	19	14	14 1/2
4	27	21	14 1/2
8	31	27	14 1/2

* Required for equipment interchangeability.
† Includes connectors and harnesses.

NEMA Standard 11-6-1975.

4.3 FUNCTIONAL STANDARDS

Clause 4.3 relates to two-phase through eight-phase controller units. Controller unit frames capable of accepting up to four phases shall contain one timing ring. Controller unit frames capable of accepting eight phases shall contain two timing rings with no more than four phases per ring. Dual-ring controller units shall have single entry operation with dual entry operation obtained by external logic. Inputs, outputs, and programming controls are separated into the following three categories:

4.3.1 Per Phase
4.3.2 Per Ring
4.3.3 Per Unit

The priority of input functions (4.3.4), the use of indicators on the controller unit (4.3.5), and the method of determining overlaps (4.3.6) are also established.

4.3.1 Features Provided Per Phase

The controller unit shall be capable of providing the following features on a per phase basis:

4.3.1.1 Time Settings

The following functions, with the associated timing ranges as a minimum, shall be provided when required by the application. For timing accuracy, see 2.1.9.

1. *Basic Intervals (or Functions)*

Initial	1-30 sec.
Extension (gap)	0-9 sec.
Maximum (maximum green or extension limit)	10-99 sec.
Yellow change	0-7 sec.
Red clearance	0-7 sec.
Walk	1-30 sec.
Pedestrian clearance	1-30 sec.

Copyright National Electrical Manufacturers Association
Provided by IHS under license with NEMA
No reproduction or networking permitted without license from IHS

Not for Resale

2. *Volume Density Timing Functions*

a. Variable Initial Timing Options:

Added Initial (2):
Minimum initial (3) ..... 1-30 sec.
Added initial per
actuation ..... 0-2. 25 sec.
Actuation before
added initial ..... 2-60 vehicles

Computed Initial (2):
Minimum initial (3) ..... 1-30 sec.
Maximum initial (6) ..... 1-30 sec.
Actuations to reach
maximum initial ..... 0-89 vehicles

Extensible Initial (2):
Minimum initial (3) ..... 1-30 sec.
Maximum initial ..... 1-30 sec.
Added initial per
actuation ..... 0-2. 25 sec.

b. *Time Waiting Gap Reduction Options:*

Passage time (4) ..... 0-9 sec.
Minimum gap ..... 0.5-7.75 sec.
Time to reduce to
minimum gap ..... 10-99 sec.
Reduce gap every (5) . 0.25-7.75 sec.
Reduce gap every
second by ..... 0.01-0.99 sec.
Reduce gap by (5) .... 0.25-1.75 sec.

NOTES:

(1) Zero can be satisfied by a time increment of up to 100 milliseconds.

(2) The variable initial requirement of the volume density feature can be satisfied by the provision of either "Added Initial", "Computed Initial", or "Extensible Initial".

(3) "Minimum Initial" can be provided by the use of "Initial" time setting control (basic intervals), or minimum GREEN.

(4) "Passage Time" can be provided by the use of "Extension (Gap)" time setting control (basic intervals).

(5) The "Reduce-gap-every" control determines the intervals of time at which the "Reduce-gap-by" control will become effective. The "Reduce-gap-by" control decreases the maximum gap time interval (Maximum Gap Passage Time).

(6) Maximum initial can be fixed 30 seconds.

3. *Reference to Controller Unit*

As a minimum, the setting of the interval time shall be provided in positive discreet increments commensurate with the following:

a. *10-second Largest Allowable Adjustment Increment*

TIME TO REDUCE TO MINIMUM GAP.

b. *1-second Largest Allowable Adjustment Increment*

INITIAL, MAXIMUM, PEDESTRIAN WALK, PEDESTRIAN CLEARANCE, AND MAXIMUM INITIAL.

c. *½-second Largest Allowable Adjustment Increment*

EXTENSION GAP.

d. *¼-second Largest Allowable Adjustment Increment*

ALL OTHER TIME SETTINGS.

4.3.1.2 Phase Intervals

1. GREEN Interval—Actuated Phase

a. *Without Volume Density*

The GREEN interval is a variable interval dependent upon vehicle actuations. The interval is divided into two portions—the INITIAL portion and the EXTENSIBLE portion. The GREEN interval time shall be limited by the MAXIMUM or EXTENSION LIMIT GREEN time function.

Thus, three time settings shall be provided for the determination of green timing on an actuated phase without volume density.

(1) *INITIAL*—the first timed portion of the GREEN interval which is set in consideration of the storage of vehicles waiting between the sensing zone of the approach vehicle detector and the stop line. The minimum green shall be equal to either INITIAL, INITIAL plus one EXTENSION, WALK plus PEDESTRIAN CLEARANCE, or WALK plus PEDESTRIAN CLEARANCE plus one EXTENSION.

(2) *EXTENSION (GAP)* (Vehicle Interval, Preset Gap, Passage Time)—see 1.1.14. The timing of this portion of the GREEN interval shall be reset with each subsequent vehicle actuation and shall not commence to time again until the vehicle actuation signal is removed from the input to the controller unit. The extensible portion of the GREEN interval is subject to termination by the MAXIMUM or EXTENSION LIMIT time function.

(3) *MAXIMUM (EXTENSION LIMIT)*—this time setting shall determine the length of time that this phase may be held GREEN in the presence of an opposing serviceable call. In the absence of a serviceable conflicting call, the MAXIMUM timer shall be held reset.

Copyright National Electrical Manufacturers Association
Provided by IHS under license with NEMA
No reproduction or networking permitted without license from IHS
Not for Resale

b. *With Volume Density*

The VOLUME DENSITY operation shall include a form of VARIABLE INITIAL timing and GAP REDUCTION timing. The effect on the INITIAL timing shall be to increase the timing in a manner which is dependent upon the number of vehicle actuations stored on this phase while its signal is displaying yellow or red. The effect on the extensible portion shall be to reduce the allowable GAP between successive vehicle actuations in a manner which is related to the delay of the first vehicle arriving on a conflicting phase. (See tabulation of time settings in 4.3.1.1 for optional means of providing volume density.)

2. *Pedestrian Timing, Concurrent*

Pedestrian timing may be associated with any of the preceding modes of vehicle signal timing, i.e., concurrent pedestrian signal timing with associated vehicle signal timing. Two time settings shall be required:

(a) WALK—this controls the amount of time that the WALK indication is displayed.

(b) PEDESTRIAN CLEARANCE—This controls the duration of the flashing period of the DON'T WALK driver output.

When a pedestrian call is stored in memory and pedestrian timing is concurrent with an associated vehicle phase, the pedestrian sequence shall commence to time when entering the vehicle GREEN of that phase.

During the indication of the WALK and PEDESTRIAN CLEARANCE INTERVALS, a concurrent GREEN vehicle indication shall be shown. It shall be possible to recycle the pedestrian indications in response to succeeding pedestrian calls for service, subject to the absence of opposing calls (vehicle or pedestrian). This recycling feature is not required in a nonactuated phase.

3. *Actuated Phase Operating in the Nonactuated Mode*

An actuated phase may be converted to NONACTUATED operation by the activation of either of the CALL TO NONACTUATED MODE inputs. There shall be a permanent demand placed on the associated vehicle and/or pedestrian phases.

4. *Termination of GREEN Timing*

GREEN timing termination shall occur in response to one of the following conditions:

(a) INTERVAL ADVANCE upon reaching the last portion of the GREEN interval.

(b) Initial timing completed, pedestrian service completed, a serviceable conflicting call present, or RED REST activated, and one of the following:

(1) PASSAGE TIME timed out or the REDUCED GAP timed out without HOLD applied.

(2) MAXIMUM or EXTENSION LIMIT time-out without HOLD applied.

(3) Upon the release of HOLD with controller unit in GREEN REST state.

(4) FORCE-OFF applied.

5. *Vehicle Change and Clearance Intervals*

(a) Following the GREEN interval of each phase, the controller unit shall display a YELLOW interval which is timed according to the YELLOW CHANGE timing control for that phase.

(b) Following the YELLOW interval of each phase, the controller unit may show a RED interval to that phase during which interval no GREEN indication shall be shown to any conflicting phase. The RED CLEARANCE interval shall be timed according to the RED CLEARANCE timing function for that phase; this RED interval is subject to omission in response to the operation of the per-ring OMIT RED CLEARANCE input.

6. *Pedestrian Timing, Exclusive*

An exclusive pedestrian phase may be provided. When servicing a pedestrian movement exclusively, no other phase shall be active. In a dual-ring controller unit, two phases in the second timing ring are the maximum number of phases which may be used when EXCLUSIVE PEDESTRIAN timing is employed in the other timing ring; neither phase can be employed on the same side of the barrier with the EXCLUSIVE PEDESTRIAN phase. In a four-phase sequential controller unit, three phases, in addition to the EXCLUSIVE PEDESTRIAN phase, are the maximum number of phases which may be used.

Two time settings shall be provided on the phase WALK and PEDESTRIAN CLEARANCE, as described in 4.3.1.2(2).

When a pedestrian call is stored in the pedestrian memory, the EXCLUSIVE PEDESTRIAN phase shall be serviced with appropriate consideration of its order in the priority of phase sequencing.

The EXCLUSIVE PEDESTRIAN phase shall rest with a steady DON'T WALK indication displayed.

Copyright National Electrical Manufacturers Association
Provided by IHS under license with NEMA
No reproduction or networking permitted without license from IHS
Not for Resale

4.3.1.3 Phase Selection Points

The phase next to be serviced shall be determined, if possible, at the end of the GREEN interval of the terminating phase. If the decision cannot be made at the end of the GREEN interval, it shall not be made until after the end of all vehicle change and clearance intervals.

4.3.1.4 Provision for Storing a Demand

There shall be a provision for storing a call for vehicle and/or pedestrian service, as required, on each phase. The vehicle memory feature shall be capable of being disabled from the front of the controller unit.

4.3.1.5 Placement of Maximum Recall

Means shall be provided to place a permanent call on a phase from the front of the controller unit such that the GREEN timing of that phase will be extended to MAXIMUM. When such a call is placed, the maximum timer will commence to time as if there were always a serviceable conflicting call, but the phase *shall not* terminate unless there is an actual serviceable conflicting call.

4.3.1.6 Placement of Minimum Recall

Means shall be provided on the front of the controller unit to place a recurring demand for vehicle service on the phase when that phase is not in its GREEN interval.

4.3.1.7 Placement of Pedestrian Recall

Means shall be provided to place a recurring pedestrian demand from the front of the controller unit which shall function in the same manner as an external pedestrian call except that it shall not recycle the PEDESTRIAN service until an opposing phase is serviced.

4.3.1.8 Placement of Call by Phase Termination

When a phase is terminated with time remaining in the PASSAGE TIME, a recall shall be left on that phase. Disabling the vehicle call memory shall defeat this feature.

4.3.1.9 Inputs

1. *Vehicle Detector Call*

Provision to enter a vehicle demand for service into the appropriate phase of the controller unit.

2. *Pedestrian Detector Call*

Provision to enter a pedestrian demand for service into the appropriate phase of the controller unit.

3. *Hold*

A basic coordination circuit combining previous circuits designated as HOLD and YIELD. This input is a command that retains the existing right-of-way and has a different controller unit response depending upon pedestrian treatment and vehicle-actuation or nonactuation. In addition, the response is modified by using the CALL TO NONACTUATED MODE input. The operation is as follows:

a. For a nonactuated phase (neither pedestrian nor vehicle actuation) with pedestrian indications, energization of the HOLD input before the WALK interval terminates shall maintain the controller unit with a GREEN and WALK indication displayed. Energization of the HOLD signal while timing the WALK portion of the GREEN interval shall not inhibit the timing of this period.

Deenergization of the HOLD input with the WALK or GREEN interval timed out shall allow the controller unit to advance into the PEDESTRIAN CLEARANCE interval.

Energization of the HOLD signal while timing the PEDESTRIAN CLEARANCE portion of the GREEN interval shall not inhibit the timing of this period.

b. For a nonactuated phase without pedestrian indication, energization of the HOLD input shall maintain the controller unit with a GREEN indication displayed. Energization of the HOLD signal while timing the GREEN interval shall not inhibit the timing of this period. Deenergization of the HOLD input with the GREEN interval timed out shall allow the controller unit to terminate the phase.

c. For an actuated phase (nonoperation of CALL TO NONACTUATED MODE inputs) operation of the HOLD input shall result in the following response of the controller unit:

Energization of the HOLD input shall allow the controller unit to time normally but shall prevent its advance into the vehicle clearance intervals with the REST STATE signal indications for the phase being GREEN for vehicles and DON'T WALK unless the pedestrian movement is recycled.

Deenergization of the HOLD input with all pedestrian intervals timed out shall allow recycling of the pedestrian movement. (See 4.3.1.2(2) for pedestrian recycle operation.)

Copyright National Electrical Manufacturers Association
Provided by IHS under license with NEMA
No reproduction or networking permitted without license from IHS
Not for Resale

4. *Phase Omit*

Input to cause omission of a phase, even in the presence of a demand, by application of an external signal. It shall affect phase selection. The omission will continue in effect until the signal is removed. The phase to be omitted shall not present a conflicting call to any other phase but shall accept and store calls.

4.3.1.10 OUTPUTS

1. *Load Switch Drivers, Basic Vehicle (Three per Phase)*

Provision of separate GREEN, YELLOW, and RED outputs for each basic vehicle phase. A circuit closure to LOGIC GROUND shall be maintained at one of these three outputs at all times.

The three outputs are intended to energize the appropriate vehicle signal load switching circuit to result in a GREEN, YELLOW, or RED indication for the duration of the required indication (Authorized Engineering Information 4-7-1983).

2. *Load Switch Drivers, Pedestrian (Three per Phase)*

Provision of separate WALK, PEDESTRIAN CLEARANCE, and DON'T WALK outputs for each pedestrian movement. A circuit closure to LOGIC GROUND shall be maintained on at least one of these three outputs at all times. The three outputs are intended to energize the appropriate pedestrian signal load switching circuit to result in a WALK, PEDESTRIAN CLEARANCE or DON'T WALK indication for the duration of the required indication. The DON'T WALK output shall flash only during the PEDESTRIAN CLEARANCE interval. (See Figure 4-1).

3. *Check*

An output to indicate the call status of the phase. It is activated when the controller unit is not in the GREEN of a phase which has a demand in that phase. The PHASE OMIT input shall not affect the CHECK output.

4. *Phase On*

An output to indicate the status of a phase. The PHASE on output of a particular phase is activated during the GREEN, YELLOW, and RED CLEARANCE intervals of that phase. It may be active during RED REST for the phase last displaying GREEN.

5. *Phase Next*

An output of a phase that is activated when that phase is committed to be next in sequence and remains present until the phase becomes active. The phase next to be serviced should be determined, if possible, at the end of the GREEN interval of the terminating phase. If the decision cannot be made at the end of the GREEN interval, it shall not be made until after the end of the RED CLEARANCE.

NEMA Standard 11-6-1975.

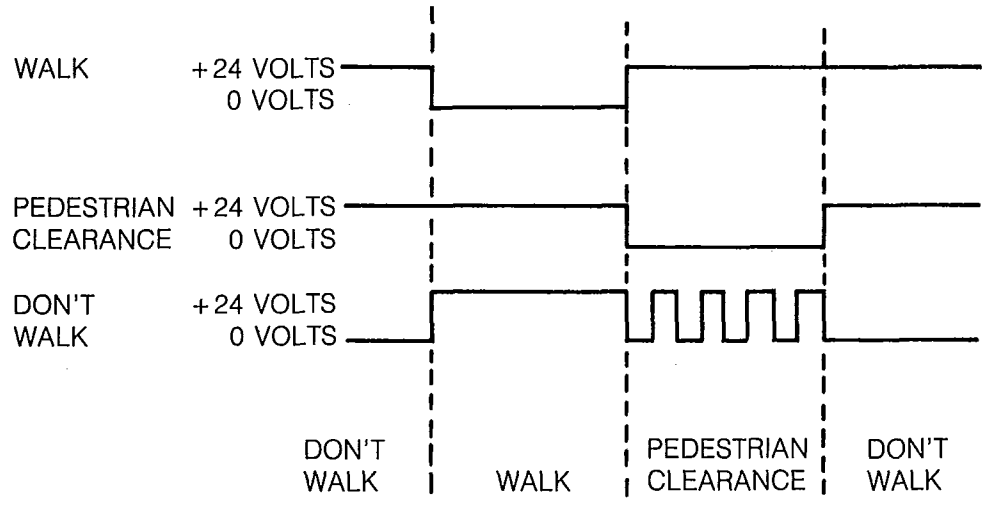

Figure 4-1

Copyright National Electrical Manufacturers Association
Provided by IHS under license with NEMA
No reproduction or networking permitted without license from IHS
Not for Resale

4.3.2 Features Provided Per Ring

The controller unit shall be capable of providing the following features on a per ring basis.

Inputs

1. *Force-Off*

Input to cause termination of the GREEN timing of the active phase in the timing ring, such termination being subject to the presence of an opposing demand.

The FORCE-OFF function shall not be effective during the timing of the INITIAL, WALK, or PEDESTRIAN CLEARANCE. The FORCE-OFF function shall be effective only as long as the input is sustained. A vehicle call shall be placed on the phase that was forced.

2. *Red Rest*

Input to require rest in RED of all phases on a per ring basis by the continuous application of an external signal. Registration of an opposing demand shall result in the immediate advance from RED REST to GREEN of the demanding phase. Registration of an opposing demand before entry into the RED REST state, even with this signal applied, shall result in the termination of the active phase and selection of the next phase in the normal manner and with appropriate clearances.

3. *Inhibit Maximum Termination*

An input to disable the maximum (MAXIMUM GREEN or EXTENSION LIMIT) termination circuits of all phases in the selected timing ring. An alternate means of satisfying this requirement is to connect the MAXIMUM II selection for all phases to the INHIBIT MAXIMUM TERMINATION input inside the controller unit and to set the MAXIMUM II time at upper limit setting.

4. *Omit Red Clearance*

Input to cause omission of RED CLEARANCE interval timing on a per ring basis by application of this external signal.

5. *Stop Timing*

An input which, when activated, causes cessation of controller unit ring timing for the duration of the activation. When activation ceases, the interrupted portion shall be retimed or the unexpired portion shall resume timing. During stop timing, vehicle actuations on NON-GREEN phases shall be accumulated; vehicle actuations shall reset the EXTENSION timer in normal manner; and the controller unit shall not terminate any interval or interval portion or select another phase, except by activation of the INTERVAL ADVANCE input.

NEMA Standard 4-7-1983.

4.3.3 Features Provided Per Unit

The controller unit shall be capable of providing the following features on a per unit basis:

4.3.3.1 INITIALIZATION

Initialization shall occur upon the restoration of power after a defined power interruption. (See 2.1.4.)

Programming for initialization shall be provided to cause the controller unit to start at the beginning of the GREEN or YELLOW interval of any selected phase or nonconflicting phase pair.

As part of the initialization routine, vehicle calls shall be placed on all phases.

4.3.3.2 INPUTS

1. *AC+ (Line Side)*

Fused side of a 120-volt alternating-current 60-hertz power source.

2. *AC− (Common)*

Unfused and unswitched return side of a 120-volt alternating-current 60-hertz power source taken from the neutral output of the alternating-current power source. This input shall not be connected to LOGIC GROUND or CHASSIS GROUND within the controller unit.

3. *Chassis Ground*

Provision for independent connection of the chassis of the controller unit to cabinet ground. This input shall not be connected to LOGIC GROUND or AC COMMON within the controller unit.

4. *Interval Advance*

A complete ON-OFF operation of this input shall cause immediate termination of the interval which is in the process of timing. Where concurrent interval timing exists, use of this input shall cause immediate termination of the interval which would terminate next without such actuation.

5. *Call to Nonactuated Mode (Two Per Unit)*

Two inputs shall be provided which, when activated will cause any phase or phases appropriately programmed to operate in the NONACTUATED MODE.

The two inputs shall be designated CALL TO NONACTUATED MODE #1 and CALL TO NONACTUATED MODE #2. When both inputs are active, all phases programmed for the NONACTUATED MODE shall operate in the NONACTUATED MODE as described in 4.3.1.2(3).

6. Test Input (Two Per Unit)

Two test inputs per unit for manufacturer's use only.

4.3.3.3 OUTPUTS

1. *Logic Ground*

Voltage reference point and current return for controller unit input and output logic circuits.

2. *Regulated Output 24 Volts DC for External Use*

See 3.2.4(1).

Copyright National Electrical Manufacturers Association
Provided by IHS under license with NEMA
No reproduction or networking permitted without license from IHS

Not for Resale

3. *Load Switch Drivers, Overlap Vehicle (Three per Overlap, Twelve per Unit) when Generated Internally*

Provision of separate GREEN, YELLOW and RED outputs for each overlap when determined internal to the controller unit, four overlaps maximum. A circuit closure to LOGIC GROUND shall be maintained at one of these three outputs, as required, to energize the appropriate overlap signal load switching circuit to result in GREEN, YELLOW, or RED indication for the duration of the required indication.

NEMA Standard 11-6-1975.

4.3.4 Priority of Input Functions

The priority of input functions shall be:

1. Power-up
2. Interval advance
3. Stop timing
4. Force-off
5. Hold

Each function, when activated, shall take precedence over and completely negate the functions listed below it.

NEMA Standard 11-6-1975.

4.3.5 Indicators

Indication shall be provided and appropriately labeled to facilitate the determination of the operation of the unit. These indications shall consist of the following, as a minimum.

1. Phase or phases in service.
2. Phase or phases next to be serviced.
3. Presence of vehicle call, including memory and detector actuations.
4. Presence of a pedestrian call.
5. The interval(s) timing and controller conditions. The following information shall be displayed for the phase in service on a per ring basis:
   a. Initial
   b. Extension
   c. YELLOW CHANGE
   d. RED CLEARANCE
   e. WALK
   f. DON'T WALK or PEDESTRIAN CLEARANCE
   g. Reason for termination
      (1) Gap-out
      (2) Maximum time-out
   h. Rest state

NEMA Standard 11-6-1975.

4.3.6 Overlaps

There are two classes of controller units:

1. With overlaps
2. Without overlaps

When overlaps are used they shall be implemented by programmable internal logic* or the use of external logic.

Overlaps which are accomplished by external logic can be provided either as part of the cabinet wiring or as an in-line plug interchangeable unit which duplicates the output of a controller unit containing internal overlaps

When overlaps are generated internally or by means of the in-line logic unit, four shall be provided (A, B, C and D), except that only three overlaps shall be provided for three-phase controller units, as follows:

Overlap A—Phase 2 + Phase 3 Overlap
Overlap B—Phase 1 + Phase 3 Overlap
Overlap C—Phase 1 + Phase 2 Overlap

When an external in-line, plug-interchangeable controller unit is used, the cabinet space required for both the controller unit and the auxiliary unit shall not exceed the maximum dimensions given in 4.2.4.

---

* In cabinets where controller units with internal overlaps are connected to signals, these overlaps must be monitored to insure that they are present.

NEMA Standard 11-6-1975.

Copyright National Electrical Manufacturers Association
Provided by IHS under license with NEMA
No reproduction or networking permitted without license from IHS
Not for Resale

Section 5
SOLID-STATE LOAD SWITCHES

Section 5 defines a solid-state load switch which is connected between the alternating-current line power and traffic signals. For the purpose of these standards, the term "solid state" shall be construed to mean that the main current to the signal load is not switched by electro-mechanical relay contacts.

5.1 THREE-CIRCUIT LOAD SWITCH

5.1.1 Physical Characteristics

1. The overall dimensions of the switch shall not exceed 8.75 inches from the surface of the connector, to the front of the unit including the handle or gripping device. The switch shall be no more than 1.75 inches in width and no more than 4.2 inches in height.

2. The switch shall intermate with a Cinch-Jones socket S-2412SB, or the equivalent.

3. The switch shall be so constructed that its lower surface will be no more than 2.100 inches below the centerline of the connector.

4. The switch shall be so constructed that no part of it will extend more than 0.900 inch to the left and 1.100 inches to the right of the centerline of the connector as viewed from the front. See Figure 5-1.

5. Internal components of the load switch shall be readily accessible by the use of a screwdriver or wrench.

6. A metal enclosure suitably protected against corrosion shall be provided to enclose all electrical parts of the load switch.

7. The front panel of the load switch shall be provided with three indicators to indicate the state of the input circuit of the load switch. The indicator shall be

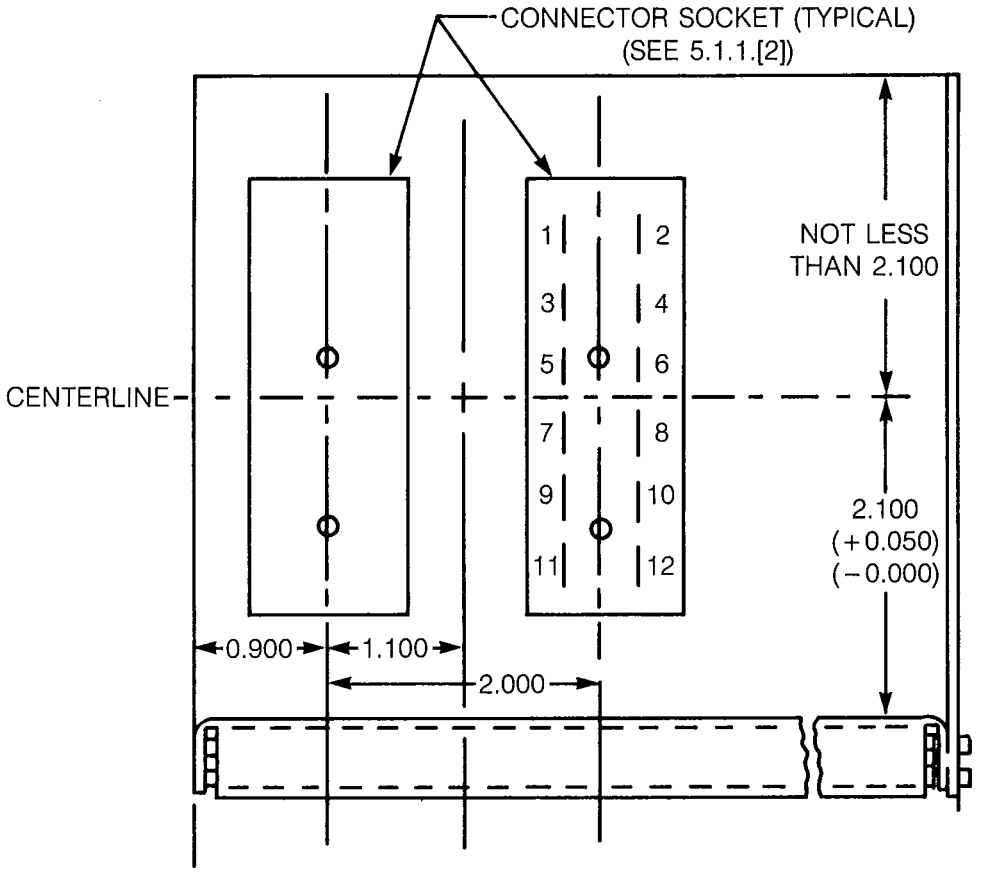

NOTE—All dimensions in inches. Drawing is not to scale.

Figure 5-1
LOAD RACK

Copyright National Electrical Manufacturers Association
Provided by IHS under license with NEMA
No reproduction or networking permitted without license from IHS
Not for Resale

mounted as follows when oriented as normally mounted:

Circuit A at the top.
Circuit B in the middle.
Circuit C at the bottom.

8. *Material and Construction of Rigid Printed Circuit Assemblies*

a. *Materials*

All printed circuit boards shall be made from NEMA (FR-4) glass-epoxy, flame retardant, or equivalent. (See NEMA Standards Publication LI-1-1982, *Industrial Laminated Thermosetting Products*). Circuit boards exceeding two inches in any dimension shall be at least 1/16 inch nominal thickness. Circuit boards not exceeding two inches in any dimension shall be at least 1/32 inch nominal thickness.

b. *Conductors*

The walls of all plated-through holes shall have a minimum copper plating thickness of .001 inches. All circuit tracks shall have a conductivity equivalent of at least two ounces of copper per square foot of surface.

c. *Component Identification*

The unit shall be designed so that each component is identified by a circuit reference symbol. This identification shall be affixed to the printed circuit board(s), to the cover of the unit, or in an assembly drawing provided with the unit.

9. The switch shall be so constructed that personnel inserting or removing the load switch cannot be exposed to any part having live voltage, and will not be required to insert their hands or fingers into a load rack.

5.1.2 General Electrical Characteristics

1. Switching capabilities shall be provided for three independent circuits in each load switch. The circuits shall be reference as A, B, and C. (See Figure 5-2.)

2. Connector pin assignments shall be as shown in Figure 5-3.

3. Unless stated otherwise, all electrical characteristics shall be maintained over the temperature range from −34°C to +74°C.

4. The switch inputs and direct current voltage input shall be so isolated from the power line that transients, as described in 2.1.6 applied to the power line with a 25 watt lamp load shall not cause a destructive failure in the load switch, and shall not cause more than 0.5 volts to appear across a 10K ohm resistor connected across a switch input and the direct current voltage input. When the low energy transients of 2.1.6.1 are applied to the

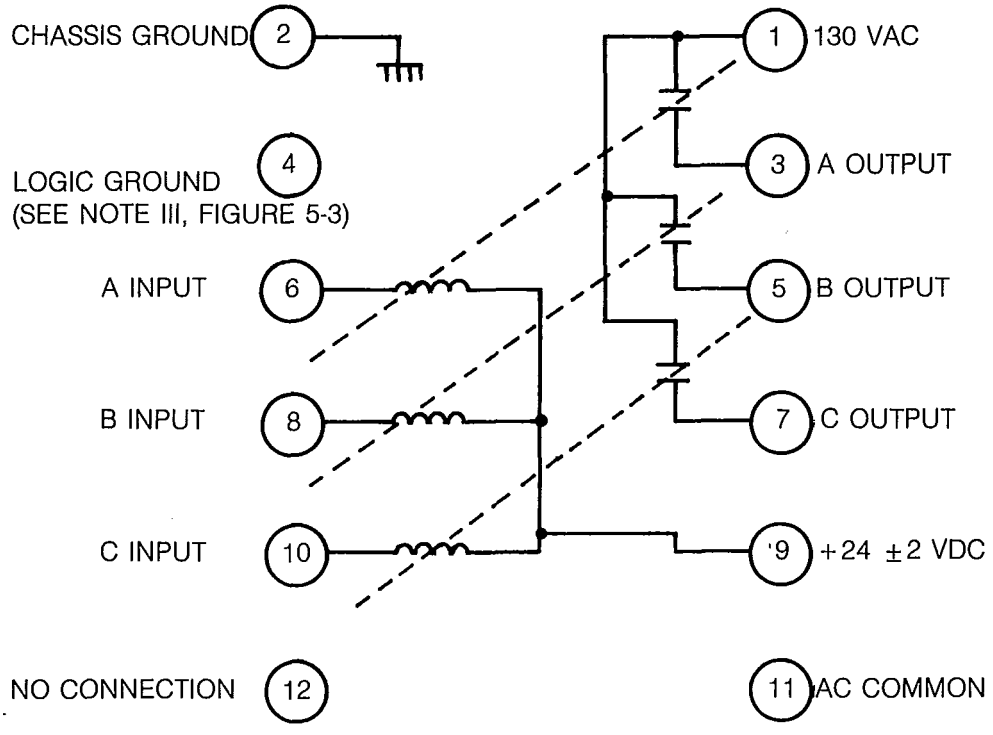

Figure 5-2
THREE-CIRCUIT LOAD SWITCH EQUIVALENT CIRCUIT DIAGRAM

Copyright National Electrical Manufacturers Association
Provided by IHS under license with NEMA
No reproduction or networking permitted without license from IHS
Not for Resale

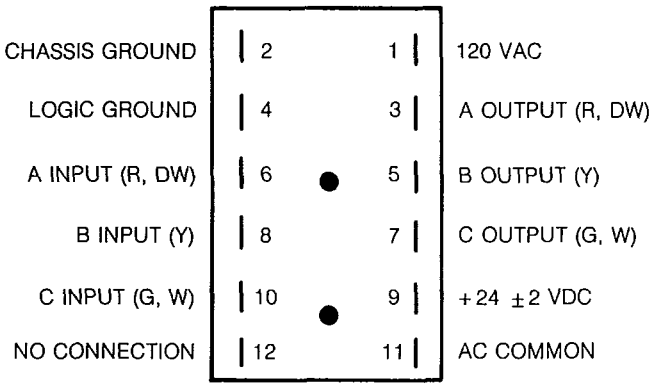

NOTE I—The terminal reference is a pin side view of the male connector.

NOTE II—Parenthetical notations associated with A, B, C inputs and outputs denote the normal usage of the termination with vehicle or pedestrian signals.

R = RED
G = GREEN
Y = YELLOW
W = WALK
DW = DON'T WALK

NOTE III—Pin 4 Logic Ground is for special function use only—not to be used for normal switching circuit currents. During normal operation standard load switch functions (as defined in Part 5) shall not require a connection to this pin.

Figure 5-3
CONNECTOR PIN ASSIGNMENTS

load switch at temperature of 21°C ± 6°C, they shall not cause the load switch to conduct, as measured with an oscilloscope.

5. The switch shall turn on within 5 degrees of the zero voltage point of the alternating current sinusoid, except the first turn-on shall occur within 10 degrees of the zero voltage point. Additionally, the switch shall turn on within one cycle following the application of the input signal. The switch shall turn off within 5 degrees of the zero current point of the alternating current sinusoid. Additionally, the switch shall turn off within one cycle following removal of the input signal.

6. Each load switch shall have isolation between all inputs (pins 6, 8, 9, and 10) and all outputs (pins 1, 3, 5, and 7) of at least 2000 volts dc and at least 100 megohms resistive.

7. LOGIC GROUND shall not be connected to either CHASSIS GROUND or ac COMMON within the unit.

8. CHASSIS GROUND shall not be connected to either LOGIC GROUND or ac COMMON within the unit.

9. The metal enclosure and handle of the load switches shall be connected to CHASSIS GROUND within the unit.

10. The load switch shall perform all of its defined functions when supplied from a 24 ± 2 volt dc source.

5.1.3 Input Electrical Characteristics

1. All inputs shall be negative true logic which is referred to the common of the 24-volt supply and which is characterized by the following:

a. The transition zone of the input circuitry from the conducting state to the non-conductive state (and vice versa) shall occur between 6 and 16 volts.

b. A voltage between 0 and 6 volts shall cause the output device to conduct.

c. A voltage greater than 16 volts shall cause the output device not to conduct.

2. In absence of an input signal, the voltage at the input shall rise to the level of the +24 VDC supply when the input is connected to this supply through an external 10K ohm resistor.

3. The load switch shall not draw more than 20 milliamperes from a +26VDC supply unless more than one circuit is energized in which case it shall not draw more than 20 milliamperes times the number of circuits energized. *(Consideration should be given to the 500 milliamperes current capacity of the +24VDC supply of the controller unit when changing from load switches without indicators to load switches with indicators.)

*Authorized Engineering Information 5-18-1983.

4. Each input circuit of the load switch shall have reverse polarity protection.

5.1.4 Output Electrical Characteristics

1. The output current through the load switch when the load switch is in the off state shall not exceed 20 milliamperes peak at 135VAC.

2. Each load switch output shall have a peak stand-off voltage of 500 volts or greater.

3. Each load switch output shall have a dv/dt rating of at least 100 volts per microsecond when measured at room temperature using the circuit in Figure 5-4.

4. Each switching circuit shall have a minimum rating of 10 amperes RMS for either tungsten lamp loads or power factor corrected gas tubing transformer loads (power factor greater than 0.8) over a voltage range of 95 to 135 volts at 60 Hertz. Additionally, each load switch shall be capable of switching currents as low as 50 milliamperes. The load switch shall be rated for 10 amperes total continuous load divided between the circuits in any proportion, and additionally each circuit shall be capable of continuously conducting 10 amperes. These ratings shall be for operation in still air when the

Copyright National Electrical Manufacturers Association
Provided by IHS under license with NEMA
No reproduction or networking permitted without license from IHS
Not for Resale

load switch is oriented as normally mounted.

5. Each load switch circuit shall be designed to switch a 1200 watt tungsten lamp load operating from a 120 VAC source for a minimum of 10 million operations.

6. Each load switch circuit shall be capable of withstanding a one second surge current of 40 amperes RMS at 60 Hertz.

7. Each load switch circuit shall withstand a one cycle surge current of 175 amperes RMS (247.5 peak) at 60 Hertz.

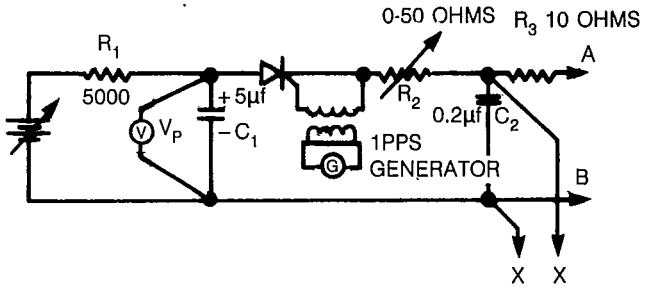

Figure 5-4
PIV AND DV/DT TEST CIRCUIT

TEST PROCEDURE FOR PIV AND DV/DT TESTING

1. With the power removed from the load, connect pins 1 (AC+) and 11 (AC−) of the load switch to terminal A of the test circuit.
2. Connect terminal B of the test circuit to pin 3 (Circuit A) of the load switch.
3. Set V_p to 500 vdc.
4. Decrease R_2 until the load switch output conducts or the value of R_2 reaches zero. If the load switch starts conducting when the test pulse is applied, back R_2 off slightly to a higher resistance point above which the load switch does not conduct. Conduction of the load switch circuit due to either PIV or dv/dt can be observed by a flickering or dipping of the V_p meter.
5. Measure the time required for the wave form at points x-x to reach 200 volts dc-dv/db = 200/time measured.
6. Repeat the test steps 4 and 5 with terminals A and B of the test circuit reversed.
7. Connect terminal B of the test circuit to pin 5 (Circuit B) of the load switch and connect terminal A of the test circuit to pins 1 and 11 of the load switch.
8. Repeat steps 3 through 6 for circuit B of the load switch.
9. Connect terminal B of the test circuit to pin 7 (Circuit C) of the load switch and connect terminal A of the test circuit to pins 1 and 11 of the load switch.
10. Repeat steps 3 through 6 for circuit C of the load switch.

Circuit Notes:

1. R_2 and R_3 shall be low inductance resistors such as carbon pile devices.
2. The load connected to x-x shall be between 500k ohms and 250 megohms (resistive).

Copyright National Electrical Manufacturers Association
Provided by IHS under license with NEMA
No reproduction or networking permitted without license from IHS
Not for Resale

Section 6
CONFLICT MONITORS

The standards in Section 6 respond to the need for a combination SIGNAL CONFLICT AND VOLTAGE MONITOR capable of interchangeability between units of different sources of manufacture.

The CONFLICT MONITOR shall detect the presence of conflicting signal indications and the absence of proper voltages at the RED signal field connection terminals. It shall also be capable of monitoring for the presence of satisfactory operating voltages of the controller unit and also within itself.

It is further anticipated that the CONFLICT MONITOR upon sensing conflicting signals or unsatisfactory operation voltages will cause the transfer of the signals to a FLASHING INDICATION, and that the controller assembly will be wired in such a manner as to provide FLASH TRANSFER if the unit is removed from service.

The standards in Part 6 describe the following four types of CONFLICT MONITORS:

Type 3 —Having three input channels preprogrammed for channel mutual noncompatibility.

Type 6 —Having six fully programmable input channels.

Type 12—Having 12 fully programmable input channels.

Type 18—Having 18 input channels fully programmable.

Each channel consists of four 120-volt alternating-current inputs—GREEN, YELLOW, WALK, and RED.

6.1 BASIC CAPABILITY

The SIGNAL MONITOR portion of the CONFLICT MONITOR shall be capable of monitoring conflicting signal indications at the field connection terminals in the controller assembly. For purpose of conflict determination, a signal on any of the GREEN, YELLOW, or WALK inputs associated with a channel shall be considered as that channel being in service.

It shall also detect the absence of any required RED signal voltage at the field connection terminals in the controller assembly. For this purpose a signal on any of the GREEN, YELLOW, WALK, or RED inputs associated with a channel shall be considered as that channel being in service.

The VOLTAGE MONITOR portion of the CONFLICT MONITOR shall be capable of monitoring the CONTROLLER UNIT voltage monitor output which indicates satisfactory operating voltage in the controller unit and the +24-volt direct-current inputs.

NEMA Standard 5-15-1978.

6.2 ACCESSIBILITY

All operating circuitry and components within the CONFLICT MONITOR shall be readily accessible for maintenance.

NEMA Standard 5-15-1978.

6.3 MATERIAL AND CONSTRUCTION OF PRINTED CIRCUIT ASSEMBLIES

All printed circuit boards shall be made from NEMA (FR-4) glass epoxy, or equivalent (see NEMA Standards Publication No. LI-1-1982, *Industrial Laminated Thermosetting Products*). Circuit boards exceeding 2 inches in any dimension shall have a nominal thickness of at least 1/16 inch. Circuit boards not exceeding 2 inches in any dimension shall have a nominal thickness of at least 1/32 inch.

The walls of all plated through holes shall have a minimum copper plating thickness of 0.001 inches. All circuit tracks shall have a conductivity equivalent to at least 2 ounces per square foot of copper. All electrical mating surfaces shall be made of noncorroding material.

The unit shall be designed so that each component is identified by a circuit reference symbol. This identification shall be affixed to the printed circuit board(s), the cover of the unit, or in an assembly drawing provided with the unit.

NEMA Standard 5-15-1978.

6.4 CONNECTORS

All inputs and outputs, including power, shall enter the unit through a front panel connector. The connectors shall conform to the provisions of Military Specification MIL-C-26482. Connector pin terminations shall conform with the tabulation listed under 6.2.7.

NEMA Standard 5-15-1978.

Copyright National Electrical Manufacturers Association
Provided by IHS under license with NEMA
No reproduction or networking permitted without license from IHS
Not for Resale

6.5 SIZE

The overall dimensions of the CONFLICT MONITOR, including mating connector(s) and harness, shall not exceed the following:

Type No.	Dimensions, Inches		
	Width	Height	Depth
3	4½	7	11
6	4½	10½	11
12	4½	10½	11
18	6	10½	11

NEMA Standard 4-7-1983.

6.6 ENVIRONMENTAL REQUIREMENTS

The CONFLICT MONITOR shall perform its specified functions under the conditions set forth in Part 2, Environmental Standards and Test Procedures for Solid State Traffic Controller Assemblies, except when specified otherwise in this standard.

NEMA Standard 5-15-1978.

6.7 POWER INPUTS

The CONFLICT MONITOR shall have the following inputs for the application of power:

6.7.1 AC+ (Line Side)

The fused side of 120-volt alternating-current 60-hertz power source. This input shall be employed to generate the voltages required to operate the monitoring logic.

6.7.2 AC− (Common)

The unfused and unswitched return side of 120-volt alternating-current 60-hertz power source taken from the neutral (ground) output of AC power source. This input shall be the reference signal for all traffic signal voltage sensing inputs. This input shall not be connected to LOGIC GROUND or CHASSIS GROUND within the unit.

NEMA Standard 5-15-1978.

6.8 CHASSIS GROUND

The CONFLICT MONITOR shall have an input terminal providing an independent connection to the chassis of the unit. CHASSIS GROUND shall be electrically connected to the connector shell(s). This input shall not be connected to the LOGIC GROUND or AC− (common) within the unit.

NEMA Standard 4-7-1983.

6.9 LOGIC GROUND

A voltage reference point and current return for the RESET input, CONTROLLER VOLTAGE MONITOR input, +24V MONITOR I input, +24V MONITOR II input, and +24V MONITOR INHIBIT input logic circuits. This termination shall not be connected to either the AC− (common) or CHASSIS GROUND within the unit.

NEMA Standard 5-15-1978.

6.10 CONTROL INPUTS

The RESET input, CONTROLLER VOLTAGE MONITOR input and +24V MONITOR INHIBIT input shall conform to the provisions of 13.2.

NEMA Standard 5-15-1978.

6.11 SENSING OF TRAFFIC SIGNAL DISPLAYS

Four inputs shall be provided for each channel to permit the monitoring of voltages at vehicle GREEN, YELLOW, RED, and WALK signal field terminals. The unit shall be designed so that it shall not be necessary to terminate unused GREEN and YELLOW and WALK signal sensing inputs when the impedance to AC+ of each of these inputs is less than the equivalent of 1500 picofarads (pf) between the lead and AC+ as measured at the input of the unit.

When the circuit connected to the sensing input of the unit exhibits high impedance characteristics such as caused by dimmers or burned out lamps, it may be necessary to place a low impedance device external to the unit between the unit input and AC− (common) (Authorized Engineering Information 4-7-1983).

All unused RED signal inputs shall be terminated to AC+.

A GREEN, YELLOW, or WALK signal input shall be sensed when it exceeds 25 volts alternating current and a signal input shall not be sensed when it is less than 15 volts alternating current. (Signals between 15 and 25 volts alternating current may or may not be sensed.) Both positive and negative half wave signals shall be sensed. A RED signal input shall require the presence of 60 ± 10 volts alternating current at the field terminal to satisfy the requirements of a RED signal indication.

NEMA Standard 5-15-1978.

Copyright National Electrical Manufacturers Association
Provided by IHS under license with NEMA
No reproduction or networking permitted without license from IHS
Not for Resale

6.12 CONFLICT MONITORING

When voltages on any conflicting channels are present concurrently for 450 milliseconds or more, the CONFLICT MONITOR shall trigger. When two signals in conflict with one another are sensed concurrently for less than 200 milliseconds, the CONFLICT MONITOR shall not trigger.

Signals in conflict sensed for 200 milliseconds or more but less than 450 milliseconds may or may not cause the CONFLICT MONITOR to trigger (Authorized Engineering Information 4-7-1983).

When the CONFLICT MONITOR triggers, it shall cause two sets of isolated Form C relay contacts on the OUTPUT relay within the unit to transfer, and these contacts shall remain in this state until the unit is reset by the activation of a front panel control or the activation of the RESET input.

Power interruption shall not reset the CONFLICT MONITOR when it has been triggered by a conflict prior to the power interruption.

NEMA Standard 5-15-1978.

6.13 RED MONITORING

The CONFLICT MONITOR shall be capable of monitoring for the absence of voltage on all of the inputs of a channel. If an output is not present on at least one input of a channel at all times, the unit shall begin timing the duration of this condition. If this condition exists for less than 700 milliseconds, the unit shall not trigger. If the condition exists for 1000 milliseconds, or more, the unit shall trigger.

If this condition exists for 700 milliseconds or more but less than 1000 milliseconds, the unit may or may not trigger (Authorized Engineering Information 4-7-1983).

When the unit triggers, it shall cause the OUTPUT relay contacts to transfer. These contacts shall remain in this state until the unit is reset by the activation of the front panel control or the activation of the RESET input.

Power interruption shall not reset the CONFLICT MONITOR when it has been triggered by detection of absence of RED.

NEMA Standard 5-15-1978.

6.14 VOLTAGE MONITORING

The CONFLICT MONITOR shall include a voltage monitor capable of monitoring two +24-volt direct-current sources applied to its two +24 VOLT MONITOR inputs and a true state signal applied to its CONTROLLER VOLTAGE MONITOR input. Absence of the proper voltage level at any of the inputs shall cause the unit to transfer the OUTPUT RELAY contacts. Restoration of *all* proper voltage levels shall reset the VOLTAGE MONITORING portion of the CONFLICT MONITOR.

6.14.1 +24-Volt Direct-current Supply Monitor

A voltage greater than +22 volts applied to both of the +24 VOLT MONITOR inputs shall be recognized by the unit as adequate for proper operation of the controller assembly.

NEMA Standard 4-7-1983.

If only one +24-volt direct-current supply is monitored, the two +24 VOLT MONITOR inputs should be jumpered and connected to that +24-volt direct-current supply (Authorized Engineering Information 4-7-1983).

A voltage less than +18 volts direct current applied to either of the +24 VOLT MONITOR inputs shall be recognized by the unit as inadequate for proper operation of the controller assembly. This shall cause transfer of the OUTPUT relay contacts.

Over the voltage range of 0 to +30 volts direct current the maximum current "in" or "out" of the +24 VOLT MONITOR input terminals shall be less than 10 milliamperes. The input impedance to these terminals shall not exceed 11 kilohms to 0 volts direct current (Logic Ground); and surge impedance shall not be less than 100 ohms.

6.14.2 +24-Volt Monitor Inhibit (Input)

Application of a "true" (low) state to this input shall inhibit the operation of the two +24 VOLT MONITOR inputs.

6.14.3 Controller Voltage Monitor Input

The CONFLICT MONITOR shall include an input from the controller unit (CONTROLLER UNIT VOLTAGE MONITOR output). Absence of the "true" (low) state on this input is an indication of improper operating voltages within the controller unit, and shall cause transfer of the unit OUTPUT relay contacts.

NEMA Standard 4-7-1983.

This input may be held in a low state (connected to LOGIC GROUND) for applications where this input is not available (Authorized Engineering Information 4-7-1983).

Copyright National Electrical Manufacturers Association
Provided by IHS under license with NEMA
No reproduction or networking permitted without license from IHS
Not for Resale

6.15 RESET

Activation of the RESET pushbutton or the RESET input shall cause the two Form C OUTPUT relay contacts to transfer to the reset condition for the duration of either of these inputs. Removal of both of these inputs shall leave the unit in the reset condition only if there are no signal conflicts, no red monitoring failure, and no voltage monitoring failures.

NEMA Standard 5-15-1978.

The only intended purpose for the reset input is to facilitate automatic testing (Authorized Engineering Information 4-7-1983).

6.16 OUTPUT

The OUTPUT relay of the CONFLICT MONITOR unit shall have two sets of isolated Form C contacts. These relay contacts shall be capable of switching all loads in the range from 2 milliamperes at 18 volts direct current to 3 amperes at 135 volts alternating current.

The open circuit of the OUTPUT relay shall be the circuits which are open when the unit is in the "no conflict" state and *all* voltages are sufficient for proper operation of the controller assembly.

NEMA Standard 4-7-1983.

6.17 MONITOR UNIT POWER FAILURE

The CONFLICT MONITOR unit shall, in addition to the operation described under voltage monitoring, be responsive to voltage failure within itself in the same manner as the unit responds to a VOLTAGE MONITOR failure—whether it is the result of overcurrent protection device operation, absence of AC+, or failure of the unit power supply.

NEMA Standard 4-7-1983.

6.18 INDICATORS

The minimum indicators shall be as follows:

1. Triggering of the conflict monitoring portion of the unit.
2. Triggering of the RED monitoring portion of the unit.
3. Operation of the voltage monitoring portion of the unit.
4. One per channel which indicates the presence of an active GREEN, YELLOW, or WALK input on that channel. The channel indicator display shall latch when the conflict monitoring portion of the unit triggers.

The displays specified in 1, 2, and 4 shall be retained in their latched state until the unit is reset or power interruption occurs.

NEMA Standard 4-7-1983.

6.19 CONTROLS

The CONFLICT MONITOR shall have a front panel control for manual reset.

NEMA Standard 4-7-1983.

6.20 OVERCURRENT PROTECTION

The CONFLICT MONITOR shall have a front panel mounted overcurrent protection device in the 120-volt alternating-current input to the unit.

NEMA Standard 5-15-1978.

6.21 PROGRAMMING

The programming of the CONFLICT MONITOR is dependent upon the specific type of unit—i.e., Type 3, Type 6, etc.

Type 3 —The three-channel unit with four inputs per channel. These three channels are preprogrammed for mutual noncompatibility.

Type 6 —The six-channel unit with four inputs per channel. These six channels are fully programmable for the specific application.

Type 12—The 12-channel unit with four inputs per channel. These twelve channels are fully programmable for the specific application.

Type 18—The 18-channel unit with four inputs per channel. These eighteen channels are fully programmable for the specific application.

CONFLICT MONITORS which are fully programmable shall require a programming action to provide compatibility between channels. Programming may be accomplished by one of the following means:

1. An interchangeable PROGRAMMING CARD, using a printed circuit board programmed through the use of soldered wire jumpers (Figures 6-1 and 6-2), may be used with Type 6 or Type 12 units.
2. An interchangeable PROGRAMMING CARD, using a printed circuit board programmed through the use of soldered wire jumpers (Figures 6-3 and 6-4), may be used with Type 18 units.

NEMA Standard 4-7-1983.

6.22 CABINET INTERLOCK

The CONFLICT MONITOR shall have two terminals internally connected (#22AWG jumper) to indicate the presence of the unit to the external circuitry. These terminals shall be identified as CABINET INTERLOCK A and CABINET INTERLOCK B.

NEMA Standard 5-15-1978.

Copyright National Electrical Manufacturers Association
Provided by IHS under license with NEMA
No reproduction or networking permitted without license from IHS
Not for Resale

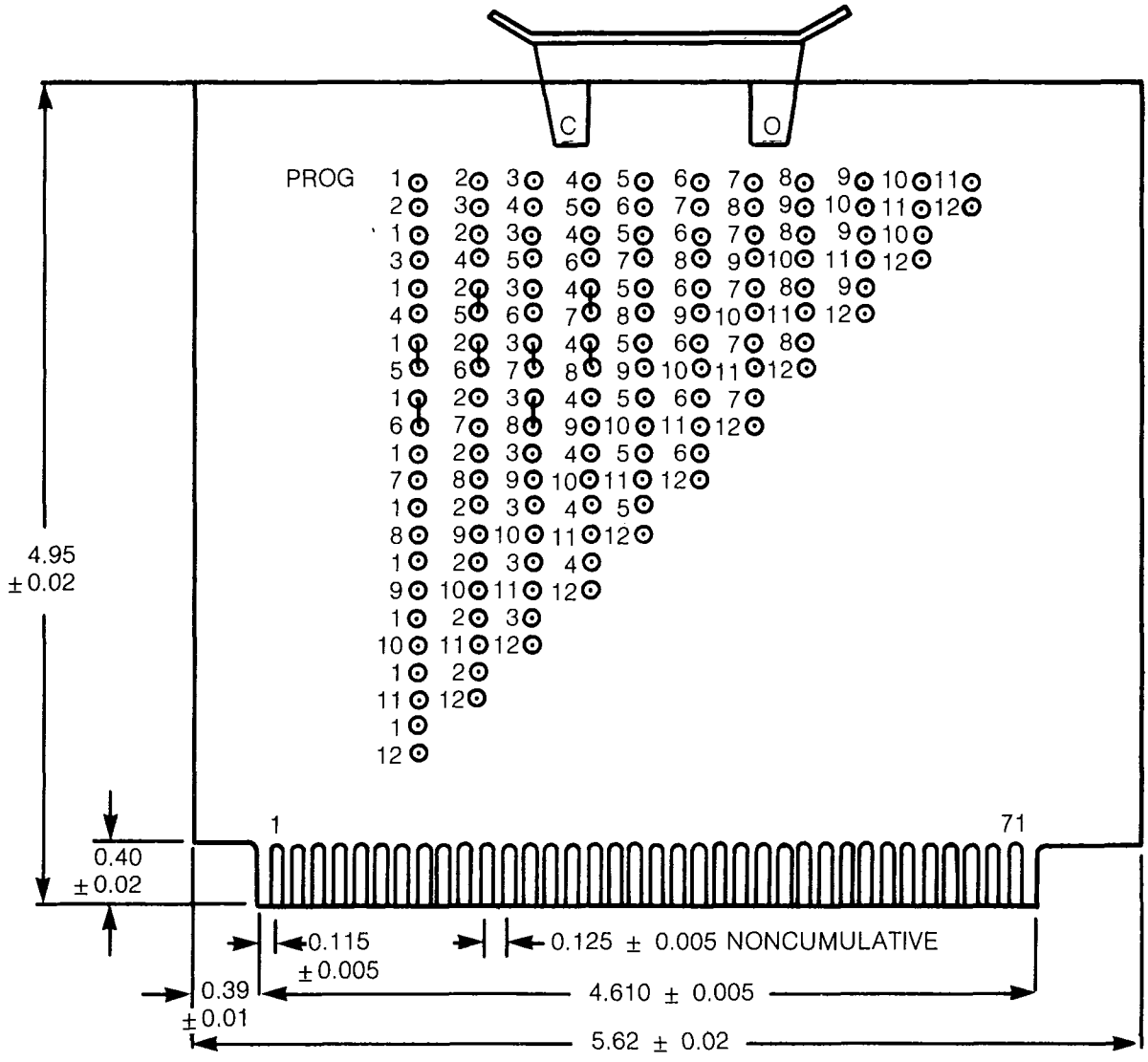

Figure 6-1
PROGRAMMING BOARD FRONT VIEW

NOTES:
1. The connector has 36 double readout positions at 0.125″ centers.
2. The programming shown is for a standard NEMA 8 phase controller without overlaps. The 8 NEMA phases are phases 1 through 8 showing jumpers for the following combinations of compatible phases: 1 & 5, 1 & 6, 2 & 5, 2 & 6, 3 & 7, 3 & 8, 4 & 7, and 4 & 8.
3. The jumpers are #22 AWG bus wire 0.2" long.
4. The handle is Vero #CH/C10037 or equivalent.
5. Material: FR4 0.062″ thick.
6. There are 132 0.043″ dia holes for programming jumpers.
7. One side of each jumper is brought out to the common pins 69 &70.

Copyright National Electrical Manufacturers Association
Provided by IHS under license with NEMA
No reproduction or networking permitted without license from IHS
Not for Resale

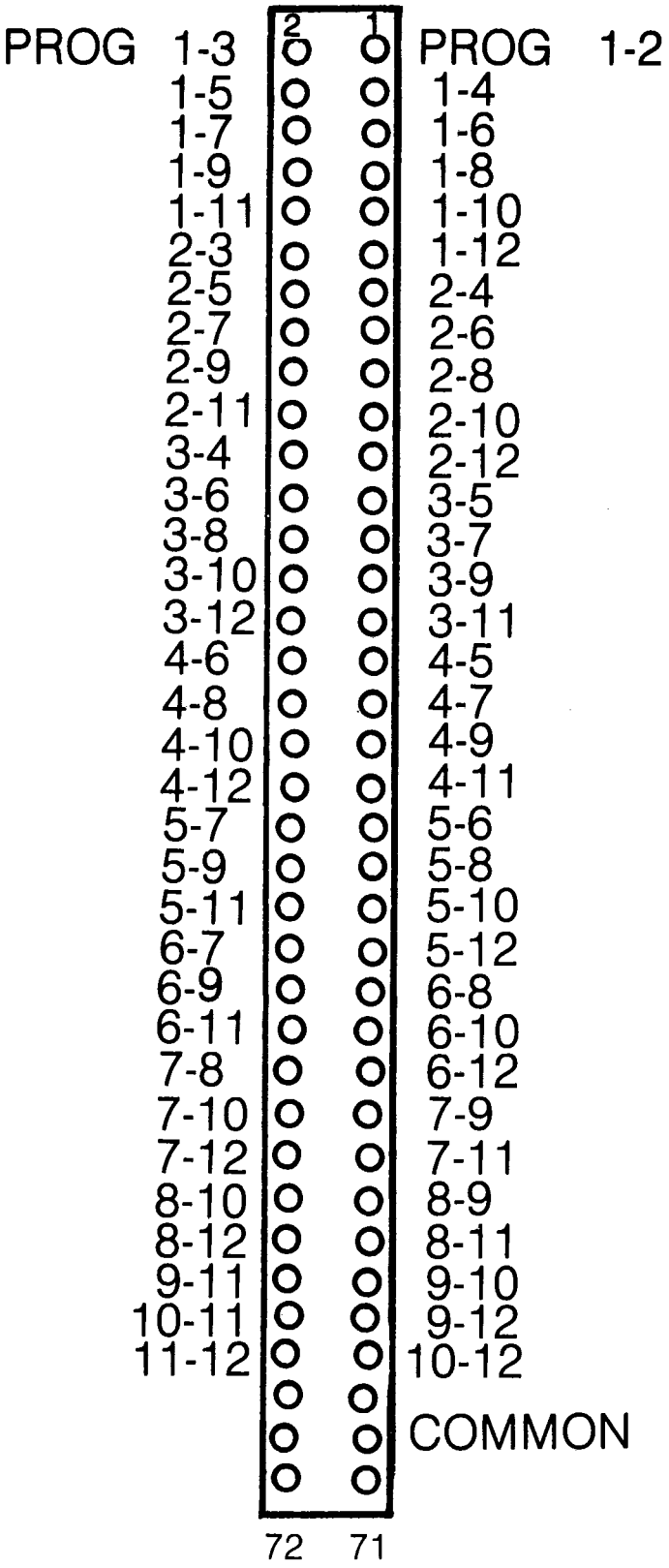

Figure 6-2
CONNECTOR REAR VIEW

Copyright National Electrical Manufacturers Association
Provided by IHS under license with NEMA
No reproduction or networking permitted without license from IHS
Not for Resale

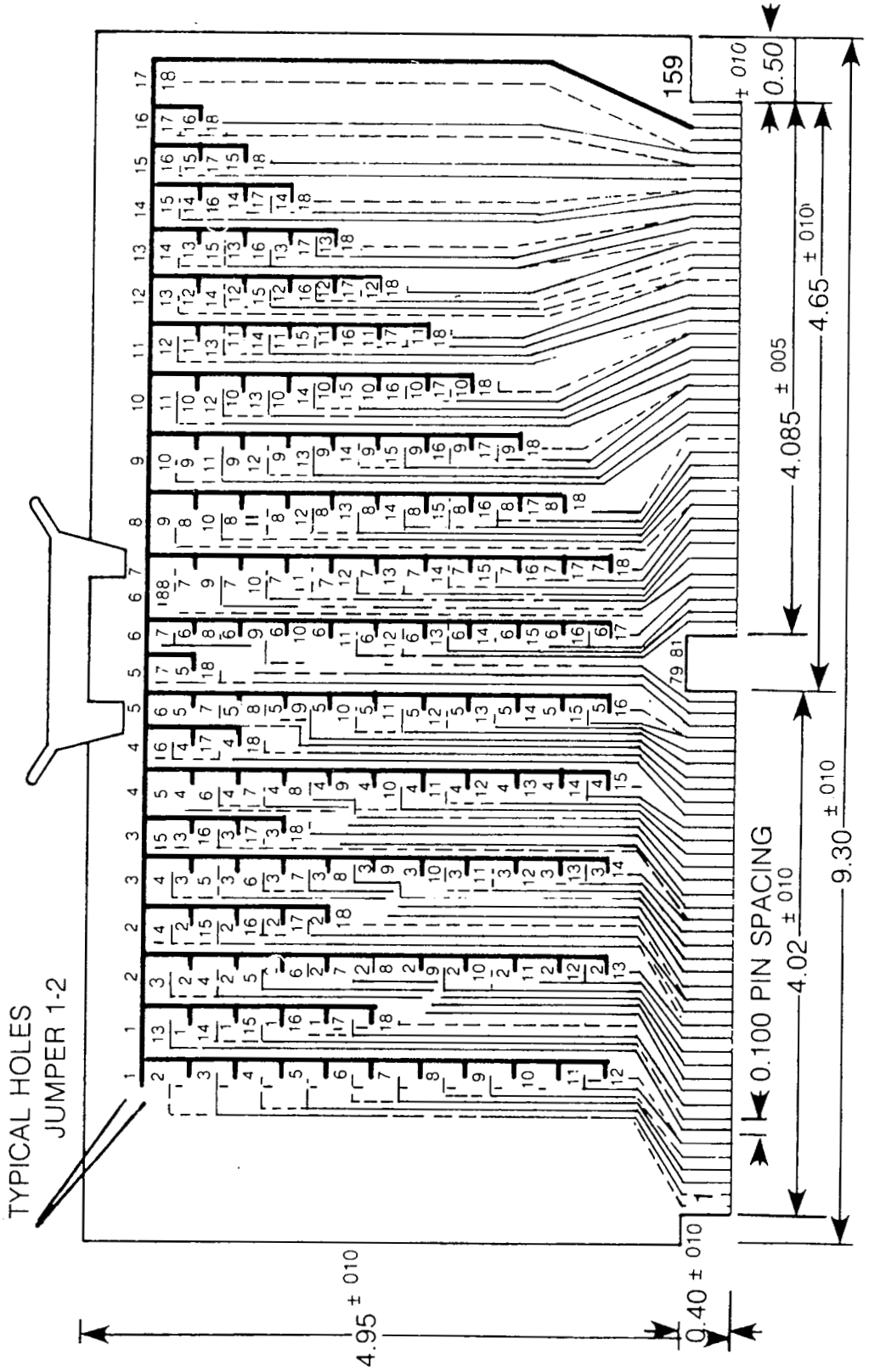

Figure 6-3
PROGRAMMING BOARD FRONT VIEW

Copyright National Electrical Manufacturers Association
Provided by IHS under license with NEMA
No reproduction or networking permitted without license from IHS

Not for Resale

PROBLEM HARD COPY

Copyright National Electrical Manufacturers Association
Provided by IHS under license with NEMA
No reproduction or networking permitted without license from IHS

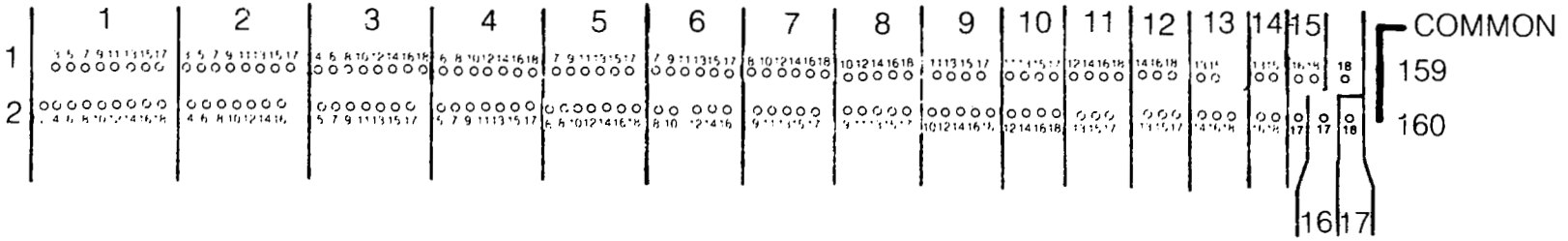

Figure 6-4
CONNECTOR REAR VIEW

NOTES:
1. Connectors have 40 double readout positions on 0.100 centers
2. Connectors are Texas Instrument Part No. H3111.40, or equivalent. Mounting ears to be cut off.
3. Jumpers are #22 AWG bus wire 0.2" long.
4. Handle is Vero #CH/C/10037 or equivalent.
5. Material: FR4 0.062" thick.
6. There are 306 0.043" dia holes for programming jumpers.
7. One side of each jumper is brought out to the common pins 157 & 158.

Not for Resale

PROBLEM HARD COPY

6470247 0004432 6

6.23 RED MONITOR ENABLE

Presence of AC+ at this input enables the CONFLICT MONITOR to detect the absence of RED indications. Absence of AC+ inhibits the detection of the absence of RED indication.

NEMA Standard 5-15-1978.

6.24 AC+ INPUT II

This AC+ input to the CONFLICT MONITOR provides AC power for this unit. AC+ input II shall be jumpered internally to AC+ input I.

NEMA Standard 5-15-1978.

6.25 MINIMUM FLASHING INDICATION AFTER POWER INTERRUPTION TO THE CONTROLLER ASSEMBLY

The CONFLICT MONITOR shall include a means of monitoring the absence of AC+ input to the unit. When the duration of power interruption exceeds 475 ±25 milliseconds, the unit shall deenergize its OUTPUT relay. The deenergized state of the OUTPUT relay shall be maintained for a timed interval following restoration of power to the AC+ input. The duration of this interval shall be adjustable between the limits of 4 seconds and 10 seconds with repeatability of 1 second and with a maximum incremental adjustment of 1 second.

NEMA Standard 5-15-1978.

The operation of the OUTPUT relay normally results in the transfer of the signal to a FLASHING INDICATION. Upon completion of the timing of the minimum flash interval, the controller unit will start up in its initialization sequence and the signalization will return to its normal operation unless the CONFLICT MONITOR had been previously triggered by detection of a conflict or absence of red (Authorized Engineering Information 4-7-1983).

6.26 START-DELAY CONTROL

The CONFLICT MONITOR shall include a means of sensing the absence of AC+ input to the unit. Upon restoration of power following a power interruption which exceeds 475 ± 25 milliseconds, a START-DELAY relay shall cause continuity to occur between its common and its open contacts for a period of 2-½ ± 1 seconds. Following this 2-½ ± 1 seconds period of time, the START-DELAY relay shall cause continuity to occur between its common and closed contacts.

The START-DELAY relay shall have a Form C relay output contact. These relay contacts shall be capable of switching all loads in the range from 2 milliamperes at 18 volts direct current to 3 amperes at 135 volts alternating current.

NEMA Standard 4-7-1983.

The operation of the START-DELAY relay normally results in initiating a start-up sequence within the controller unit by interrupting the AC+ input to the controller unit (Authorized Engineering Information 4-7-1983).

6.27 PIN ASSIGNMENTS

Input-output pin terminations shall conform with the following tabulations.

If additional input-output terminations are required to allow for the inclusion of additional functional capabilities, such terminations shall be provided on an additional connector which *shall not* be interchangeable with another connector on the face of the CONFLICT MONITOR. The provision of these additional capabilities shall not modify the operating capabilities of the unit when the additional input-output connector is disconnected.

Open contacts of the OUTPUT relay are the contacts which are open when the CONFLICT MONITOR is in the no conflict state and all voltages are sufficient for proper operation of the controller assembly.

Type 3—Connector Shall Mate with MS 3116 20-41S

A. AC+ I (Jumpered Internally to AC+ II)
B. AC+ II Input (Refer to 6.24)
C. Output Relay I Common
D. Output Relay 1 Open (closes when fault occurs)
E. Output Relay 2 Common
F. Output Relay 2 Closed (opens when fault occurs)

Copyright National Electrical Manufacturers Association
Provided by IHS under license with NEMA
No reproduction or networking permitted without license from IHS
Not for Resale

G. Start-delay Relay Common
H. Start-delay Relay Open (closes during start delay period)
J. Channel 3 Green
K. Channel 3 Yellow
L. Channel 2 Green
M. Channel 2 Yellow
N. Channel 1 Green
P. Channel 1 Yellow
R. Channel 1 Walk
S. +24V Monitor II
T. Controller Voltage Monitor
U. +24V Monitor I
V. Logic Ground
W. Chassis Ground
X. AC−
Y. Cabinet Interlock A
Z. Output Relay 1 Closed (opens when fault occurs)

a. Output Relay 2 Open (closes when fault occurs)
b. Start-delay Relay Closed (open during start delay period)
c. Channel 3 Walk
d. Channel 3 Red
e. Channel 2 Walk
f. Channel 2 Red
g. Channel 3 Red
h. Reset
i. Red Enable
j. +24V Monitor Inhibit
k. Spare 1
m. Cabinet Interlock B
n. Spare 2
p. Spare 3
q. Spare 4
r. Spare 5
s. Spare 6
t. Spare 7

Type 6—Connector Shall Mate with MS 3116 22-55 SY

A. AC+I (Jumpered Internally to AC+II)
B. AC+II Input (Refer to TS 1-6.24)
C. Output Relay 1 Open (closes when fault occurs)
D. Output Relay 2 Closed (opens when fault occurs)
E. Start-delay Relay Open (closes during start delay period)
F. Channel 6 Green
G. Channel 6 Red
H. Channel 5 Green
J. Channel 4 Green
K. Channel 4 Red
L. Channel 3 Green
M. Channel 2 Green
N. Channel 2 Red
P. Channel 1 Green
R. Red Enable
S. +24V Monitor I
T. Logic Ground
U. Chassis Ground
V. AC−
W. Cabinet Interlock B
X. Output Relay 1 Common
Y. Output Relay 2 Common
Z. Output Relay 2 Open (closes when fault occurs)

a. Start-delay Relay Common
b. Channel 6 Yellow
c. Channel 5 Yellow
d. Channel 5 Red
e. Channel 4 Yellow
f. Channel 3 Yellow
g. Channel 3 Red
h. Channel 2 Yellow
i. Channel 1 Yellow
j. Channel 1 Red
k. +24V Monitor II
m. Controller Voltage Monitor
n. +24V Monitor Inhibit
p. Cabinet Interlock A
q. Spare 1
r. Output Relay 1 Closed (opens when fault occurs)
s. Start-delay Relay Closed (open during start delay period)
t. Channel 6 Walk
u. Channel 5 Walk
v. Channel 4 Walk
w. Channel 3 Walk
x. Channel 2 Walk
y. Channel 1 Walk
z. Reset

AA. Spare 2
BB. Spare 3
CC. Spare 4
DD. Spare 5
EE. Spare 6
FF. Spare 7
GG. Spare 8
HH. Spare 9

Copyright National Electrical Manufacturers Association
Provided by IHS under license with NEMA
No reproduction or networking permitted without license from IHS
Not for Resale

Type 12—Connector A Shall Mate with MS 3116 22-55 SZ

A. AC+I (Jumpered Internally to AC+II)
B. Output Relay 1 Open (closes when fault occurs)
C. Output Relay 2 Closed (opens when fault occurs)
D. Channel 12 Green
E. Channel 11 Green
F. Channel 10 Green
G. Channel 9 Green
H. Channel 8 Green
J. Channel 7 Green
K. Channel 6 Green
L. Channel 5 Green
M. Channel 4 Green
N. Channel 3 Green
P. Channel 2 Green
R. Channel 1 Green
S. +24 Monitor I
T. Logic Ground
U. Chassis Ground
V. AC−
W. Output Relay 1 Common
X. Output Relay 2 Common
Y. Channel 12 Yellow
Z. Channel 11 Yellow

a. Channel 10 Walk
b. Channel 10 Yellow
c. Channel 9 Yellow
d. Channel 8 Yellow
e. Channel 7 Yellow
f. Channel 6 Yellow
g. Channel 5 Yellow
h. Channel 3 Yellow
i. Channel 3 Walk
j. Channel 2 Yellow
k. Channel 1 Yellow
m. Controller Voltage Monitor
n. +24V Monitor Inhibit
p. Output Relay 1 Closed (opens when fault occurs)
q. Output Relay 2 Open (closes when fault occurs)
r. Channel 12 Walk
s. Channel 11 Walk
t. Channel 9 Walk
u. Channel 8 Walk
v. Channel 7 Walk
w. Channel 5 Walk
x. Channel 4 Yellow
y. Channel 2 Walk
z. Channel 1 Walk

AA. Spare 1
BB. Reset
CC. Cabinet Interlock A
DD. Cabinet Interlock B
EE. Channel 6 Walk
FF. Channel 4 Walk
GG. Spare 2
HH. Spare 3

Type 12—Connector B Shall Mate with MS 3116 16-26 S

A. AC+ II Input
B. Start-delay Relay Common
C. Start-delay Relay Open (closes during start delay period
D. Channel 12 Red
E. Channel 11 Red
F. Channel 9 Red
G. Channel 8 Red
H. Channel 7 Red
J. Channel 6 Red
K. Channel 5 Red
L. Channel 4 Red
M. Channel 2 Red
N. Channel 1 Red
P. Spare 1
R. +24V Monitor II
S. Spare 2
T. Spare 3
U. Start-delay Relay Closed (open during start delay period
V. Channel 10 Red
W. Spare 4
X. Spare 5
Y. Spare 6
Z. Channel 3 Red

a. Red Enable
b. Spare 7
c. Spare 8

Type 18—Connector A SHall Mate With MS 3116 24-16 61 SZ

A. AC+ Input
B. Output Relay 1 Open (closes when fault occurs)
C. Output Relay 2 Closed (opens when fault occurs)

Copyright National Electrical Manufacturers Association
Provided by IHS under license with NEMA
No reproduction or networking permitted without license from IHS
Not for Resale

D. Start-delay Relay Open (closes during start delay period)
E. Channel 8 Green
F. Channel 8 Yellow
G. Channel 7 Green
H. Channel 6 Green
J. Channel 6 Yellow
K. Channel 5 Green
L. Channel 5 Yellow
M. Channel 4 Green
N. Channel 4 Yellow
P. Channel 3 Green
R. Channel 3 Yellow
S. Channel 2 Green
T. Channel 2 Yellow
U. Channel 1 Green
V. Reset
W. +24V Monitor II
X. Controller Voltage Monitor
Y. +24V Monitor I
Z. Logic Ground

a. Chassis Ground
b. AC−
c. Output Relay 1 Common
d. Output Relay 2 Common
e. Start-delay Relay Common
f. Channel 8 Walk
g. Channel 7 Walk
h. Channel 7 Yellow
i. Channel 6 Walk
j. Channel 5 Walk
k. Channel 4 Red
m. Channel 4 Walk
n. Channel 3 Walk
p. Channel 2 Walk
q. Channel 1 Walk
r. Channel 1 Yellow
s. Red Enable
t. Cabinet Interlock A
u. +24V Monitor Inhibit
v. Output Relay 1 Closed (opens when fault occurs)
w. Output Relay 2 Open (closes when fault occurs)
x. Start-delay Relay Closed (open during start delay period)
y. Channel 8 Red
z. Channel 7 Red

AA. Channel 6 Red
BB. Channel 5 Red
CC. Channel 3 Red
DD. Channel 2 Red
EE. Channel 1 Red
FF. Cabinet Interlock B
GG. Spare 1
HH. Spare 2
JJ. Spare 3
KK. Spare 4
LL. Spare 5
MM. Spare 6
NN. Spare 7
PP. Spare 8

Type 18—Connector B Shall Mate with MS 3116 20-41-SW

A. Channel 18 Green
B. Channel 18 Yellow
C. Channel 17 Green
D. Channel 17 Yellow
E. Channel 16 Green
F. Channel 16 Yellow
G. Channel 15 Green
H. Channel 15 Yellow
J. Channel 14 Green
K. Channel 14 Yellow
L. Channel 13 Green
M. Channel 13 Yellow
N. Channel 12 Green
P. Channel 12 Yellow
R. Channel 11 Green
S. Channel 11 Yellow
T. Channel 10 Green
U. Channel 10 Yellow
V. Channel 9 Green
W. Channel 9 Yellow
X. Channel 18 Walk
Y. Channel 17 Walk
Z. Channel 16 Walk

a. Channel 16 Red
b. Channel 15 Walk
c. Channel 14 Walk
d. Channel 13 Walk
e. Channel 13 Red
f. Channel 12 Walk
g. Channel 11 Walk
h. Channel 10 Walk
i. Channel 10 Red
j. Channel 9 Walk
k. Channel 18 Red
m. Channel 17 Red
n. Channel 15 Red
p. Channel 14 Red
q. Channel 12 Red
r. Channel 11 Red
s. Channel 9 Red
t. spare

Copyright National Electrical Manufacturers Association
Provided by IHS under license with NEMA
No reproduction or networking permitted without license from IHS
Not for Resale

Section 7
INDUCTIVE LOOP DETECTORS

Section 7 responds to the need for a vehicle loop detector which provides inputs for traffic-actuated or traffic-responsive control, surveillance, or data collection systems. The inductive loop detector responds to the presence of the vehicles on the roadway by relying upon the effect of the conductive mass of the vehicle on the alternating magnetic field of a loop. When a vehicle passes over the loop of wire imbedded in the surface of the roadway, it reacts with the alternating magnetic field which is associated with that loop.

This section covers the performance and design requirements of interchangeable inductive loop detector units which employ either analog or digital techniques, or both. Used in combination with the sensor loop imbedded in the surface of a roadway, they provide a detection device for vehicles moving or standing in the detection zone of the sensor loop. The output of the loop detector unit may be used directly to provide an input to a vehicle-actuated traffic controller unit or provide inputs to traffic-responsive control and surveillance systems. Loop detectors generate outputs indicative of vehicles passing through the sensor loop zone of detection. This output may be used for counting (volume) or for presence time representative of the time that vehicles are in sensor loop zone of detection (occupancy), or both.

Authorized Engineering information 1-29-1981.

7.1 LOOP DETECTOR DEFINITIONS

7.1.1 Vehicle Detector System

A system for indicating the presence or passage of vehicles.

NEMA Standard 1-29-1981.

7.1.2 Loop Detector System

A vehicle detector system that senses a decrease in inductance of its sensor loop(s) during the passage or presence of a vehicle in the zone of detection of the sensor loop(s).

NEMA Standard 1-29-1981.

7.1.3 Sensor Loop

An electrical conductor arranged to encompass a portion of roadway to provide a zone of detection and designed such that the passage or presence of a vehicle in the zone causes a decrease in the inductance of the loop that can be sensed for detection purposes.

NEMA Standard 1-29-1981.

7.1.4 Zone of Detection

That area of the roadway within which a vehicle is detected by a vehicle detector system.

NEMA Standard 1-29-1981.

7.1.5 Loop Detector Unit

An electronic device which is capable of energizing the sensor loop(s), of monitoring the sensor loop(s) inductance and of responding to a predetermined decrease in inductance with an output which indicates the passage or presence of vehicles in the zone of detection.

NEMA Standard 1-29-1981.

7.1.6 Channel

Electronic circuitry which functions as a loop detector unit.

NEMA Standard 1-29-1981.

7.1.7 Lead-in Cable

The electrical cable which serves to connect the sensor loop(s) to the input of the loop detector unit.

NEMA Standard 1-29-1981.

7.1.8 Detector Mode

A term used to describe the duration and conditions of the occurrence of a detector output.

NEMA Standard 1-29-1981.

7.2 FUNCTIONAL STANDARDS

7.2.1 Operation

The inductive loop vehicle detector unit defined and described in these standards shall respond to change in the inductance of the sensor loop/lead-in combination(s) connected to its loop input terminals. It shall develop a detection output when there is a sufficiently large decrease in the magnitude of the connected inductance.

The sensor loop(s) connected to the detector unit input terminals shall be located at the intended zone(s) of detection. The sensor loop(s) shall be connected to the detector unit by means of lead-in cable.

The sensor loop(s) shall be so configured that the presence of a vehicle in each zone of detection causes a sufficient decrease in inductance to cause an output response from the detector unit.

NEMA Standard 1-29-1981.

Copyright National Electrical Manufacturers Association
Provided by IHS under license with NEMA
No reproduction or networking permitted without license from IHS

Not for Resale

7.2.2 Configurations and Dimensions

7.2.2.1 CONFIGURATIONS

These standards cover the following detector unit configurations:

1. Shelf-mounted, powered from 120 volts AC, with relay output.
   a. One Channel
   b. Two Channels
2. Shelf-mounted, powered from 120 volts AC, with electrically isolated solid state output(s).
   a. One channel
   b. Two channels
   c. Four channels
3. Card-rack-mounted, powered from an external 24-volt dc source and with electrically isolated solid state output(s).
   a. Two channels
   b. Four channels

Each channel shall be provided with independent loop input terminals and shall deliver detection information on independent output terminals.

7.2.2.2 DIMENSIONS

1. Shelf-mounted one-channel units shall be a maximum of 2.5 inches wide by 7 inches high by 9 inches deep, including projections, but excluding the mating connector.
2. Shelf-mounted two- or four-channel units shall be a maximum of 3.5 inches wide by 7 inches high by 9 inches deep, including projections, but excluding the mating connector.
3. Two-channel card rack units shall be 1.14 inches maximum width by 4.5 inches high by 7.00 inches deep, excluding the handle, as shown in Figure 7-1.
4. Four-channel card rack units shall be 2.31 inches maximum width by 4.5 inches high by 7.00 inches deep, excluding the handle, as shown in Figure 7-2.

NEMA Standard 1-29-1981.

7.2.3 Connectors

On shelf-mounted units all inputs and outputs, including power, shall enter the unit through a front panel connector. The connectors of shelf-mounted units shall mate with the connectors specified in 7.2.25.

NEMA Standard 1-29-1981.

7.2.4 Accessibility

The detector unit shall be easily disassembled to gain access for maintenance. When thus disassembled, the detector unit shall be operational for trouble shooting.

NEMA Standard 4-7-1983.

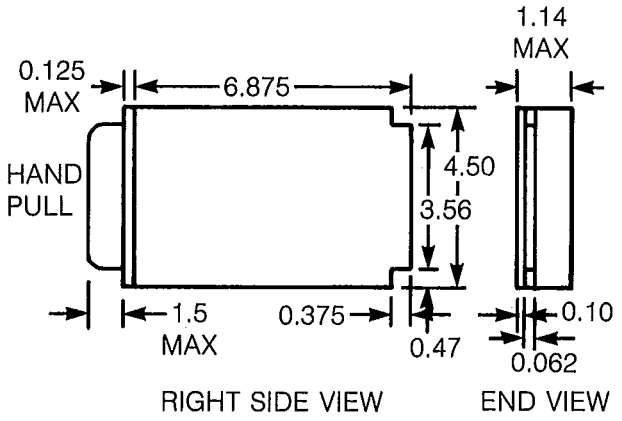

Not to scale
All dimensions in inches
± *0.020 Tolerance (where applicable)*

Figure 7-1
TWO-CHANNEL CARD RACK UNIT

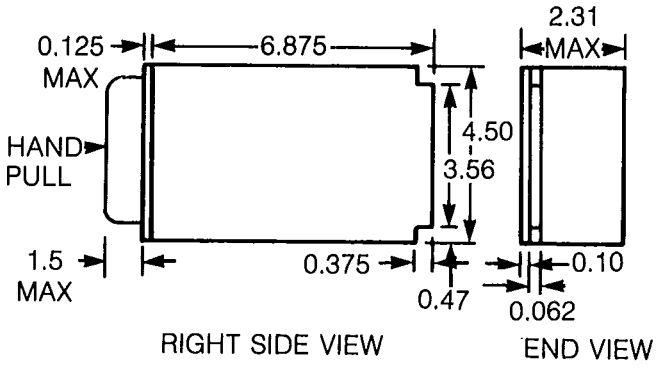

Figure 7-2
TWO-CHANNEL CARD RACK UNIT

Not to Scale
All dimensions in inches
± 0.020 Tolerance (where applicable)

Copyright National Electrical Manufacturers Association
Provided by IHS under license with NEMA
No reproduction or networking permitted without license from IHS
Not for Resale

7.2.5 Materials and Construction of Rigid Printed Circuit Assemblies

7.2.5.1 Materials

All printed circuit boards shall be made from NEMA (FR-4) glass-epoxy, flame retardant, or equivalent (see NEMA Standards Publication LI 1-1982, *Industrial Laminated Thermosetting Products*). Circuit boards exceeding 2 inches in any dimension shall be at least 1/16 inch nominal thickness. Circuit boards not exceeding 2 inches in any dimension shall be at least 1/32 inch nominal thickness.

7.2.5.2 Conductors

The walls of all plated-through holes shall have a minimum copper plating thickness of 0.001 inch. All circuit tracks shall have a conductivity equivalent to at least 1 ounce per square foot of copper. All electrical mating surfaces shall be made of noncorroding material.

7.2.5.3 Component Identification

The unit shall be designed so that each component is identified by a circuit reference symbol. This identification shall be affixed to the printed circuit board(s), the cover of the unit, or in an assembly drawing provided with the unit.

NEMA Standard 1-29-1981.

7.2.6 Environmental Requirements

Loop detector units shall operate in accordance with requirements listed herein under the following environmental conditions (the words "loop detector unit" are substituted for "controller assembly" in the cited paragraphs).

7.2.6.1 Voltage, AC-powered Units

1. *Voltage Range*—The voltage range shall be in accordance with 2.1.2.
2. *Frequency Range*—The frequency range shall be in accordance with 2.1.3.

7.2.6.2 Voltage, DC-powered Units

1. *Voltage Range*—The voltage range shall be 24 ± 2.5 volts dc.
2. *Ripple*—The maximum supply ripple shall be 500 millivolts peak to peak.

7.2.6.3 AC Power Interruption

Two or more power interruptions which are separated by power restorations of 1500 milliseconds or more shall be considered as separate interruptions. The loop detector unit shall react to the power interruptions as follows:

1. Three interruptions of 20 milliseconds or less which are separated by power restorations of 300 milliseconds (or more) shall not cause the loop detector unit to revert to its start-up sequence.
2. The loop detector unit shall be permitted to revert to its start-up sequence following power interruptions longer than 20 milliseconds.

7.2.6.4 Temperature and Humidity

Temperature and humidity shall be in accordance with 2.1.5.

7.2.6.5 Transients, AC-powered Units

Loop detector units using 120 volt ac 60-Hertz input power shall meet the following requirements:

1. The detector unit shall withstand the high-repetition noise transients as described in 2.1.6.1.
2. The detector unit shall withstand the low-repetition, high-energy transients as described in 2.1.6.2.
3. The detector unit shall withstand the nondestructive transient as described in 2.1.8.

7.2.6.6 Transients, DC-powered Units

Loop detector units using 24-volt dc input power shall operate normally when the test impulse described in 2.1.7 is applied as follows:

1. Between LOGIC GROUND and the +24-volt dc power input. The test set-up shown in Fig. 7-3 shall be used for this test.

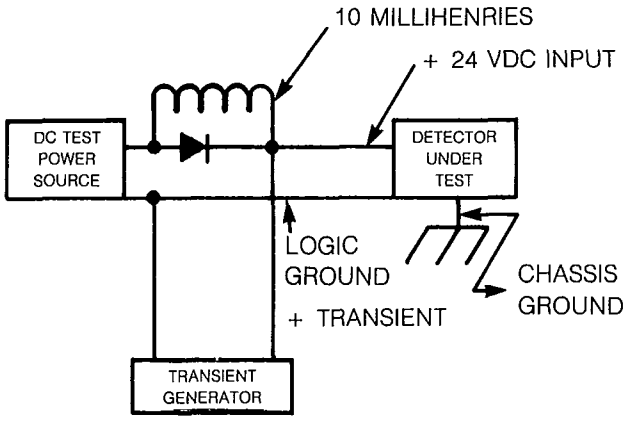

TEST CONDITIONS:

1. Transient generator is described in 2.1.7.
2. The input voltage shall be 24 ± 2.5 volts dc measured at the input terminal to the loop detector under test.
3. The dc power source must be capable of supplying at least 100 milliamperes per channel.
4. When testing for the reverse polarity transient, the diode shown shall be reversed.

Figure 7-3
TEST CONFIGURATION

Copyright National Electrical Manufacturers Association
Provided by IHS under license with NEMA
No reproduction or networking permitted without license from IHS
Not for Resale

2. Across the output terminals of each channel while in both the detect and nondetect condition.

Detector loop inputs are specifically excluded from this test.

7.2.6.7 Transients, Loop Detector Input Terminals

The detector shall be capable of withstanding the following nondestructive transient test:

1. The detector loop input terminals, with loop not connected, shall be subjected to the nondestruct transient immunity test described in 2.1.8, except that the amplitude shall be 200 volts ± 5 percent.

2. Each detector loop input terminal shall be subjected to one transient pulse of each polarity between the loop terminal and chassis ground with the other loop terminal ungrounded and repeated with the other terminal connected to chassis ground as shown in Fig. 7-4. The test shall be performed with the detector operating from its normal power source and with a 100 uH ± 10 percent coil connected across the loop terminals of each channel.

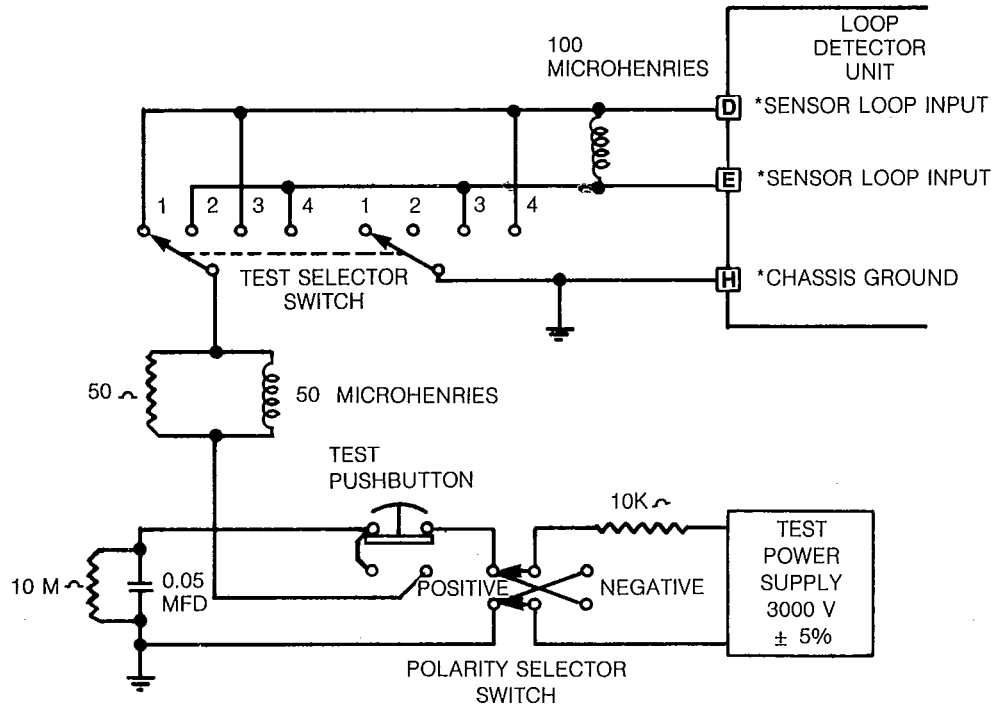

TRANSIENT TEST CONFIGURATIONS

TEST NUMBER	TEST SELECTOR POSITION	POLARITY SELECTOR	TESTED INPUTS*
1	1	POSITIVE	D TO H
2	2	POSITIVE	E TO H
3	3	POSITIVE	D TO E
4	4	POSITIVE	E TO D
5	1	NEGATIVE	D TO H
6	2	NEGATIVE	E TO H
7	3	NEGATIVE	D TO E
8	4	NEGATIVE	E TO D

Figure 7-4
LOOP INPUT TERMINAL TRANSIENT TESTS

*The pin designations shown are for a single channel detector. Similar tests shall be performed on all channels of a multichannel detector.

Copyright National Electrical Manufacturers Association
Provided by IHS under license with NEMA
No reproduction or networking permitted without license from IHS
Not for Resale

The energy source shall be a capacitor of 0.05 uF ±5 percent connected in accordance with Fig. 7-4.

The voltage on the capacitor shall be adjusted to 3000 volts, ± 5 percent.

The pushbutton shall be activated for at least 1 second for each of the eight conditions.

7.2.6.8 VIBRATION

The loop detector unit shall maintain both its physical integrity and operating characteristics when subjected to the vibration test in 2.2.5. This test shall be run at nominal voltage and room environmental conditions.

7.2.6.9 SHOCK

The loop detector unit shall suffer neither permanent mechanical deformation nor any damage which renders it inoperable when subjected to the shock test described in 2.2.6. This test shall be run at room environmental conditions without power applied to the unit.

NEMA Standard 1-29-1981.

7.2.7 Power Inputs

7.2.7.1 AC+ (LINE SIDE)

The AC+ (line side) is the protected side of the 120 volt AC 60-Hertz power source. The steady state input current per channel shall not exceed 100 milliamperes rms.

7.2.7.2 AC− (COMMON)

The AC− (common) is the unfused and unswitched return side, neutral of the 120-volt AC 60-Hertz power source. This input shall not be connected to LOGIC GROUND or CHASSIS GROUND within the unit nor to the loop input terminals.

7.2.7.3 PLUS 24 VDC

This input supplies power for DC units. The current consumption shall not exceed 100 milliamperes per channel. The return for this input is LOGIC GROUND as described in 7.2.8.

NEMA Standard 1-29-1981.

7.2.8 Logic Ground

Logic ground is the return for +24 volts DC. This point shall not be connected within the unit to AC− (common) or to CHASSIS GROUND, or to any loop input terminal.

NEMA Standard 1-29-1981.

7.2.9 Chassis Ground

The loop detector unit shall have a terminal for connection to the chassis of the unit. This input shall not be connected to LOGIC GROUND, AC− (common), or to any other point within the unit, except that it shall be permissible to use this input as a return for transient protection devices.

If the unit has a metallic case, the case shall be connected to CHASSIS GROUND.

NEMA Standard 1-29-1981.

7.2.10 Loop/Lead-in Electrical Properties

Each channel of the detector unit shall function in accordance with the specific requirements of this standard and shall in addition operate without significant degradation with any sensor loop/lead-in combination which exhibits the following electrical properties as measured at the detector unit terminals of the lead-in:

1. Inductance at 50 K Hz—50 to 700 microhenries.
2. Q at 50 K Hz—greater than 5.
3. Resistance to earth ground—greater than 1 megohm.

NEMA Standard 1-29-1981.

7.2.11 Test Loop Configurations

Sensor loop and lead-in combinations used to verify the performance requirements of this standard shall consist of the following combinations of 6- by 6-feet three-turn loops and shielded lead-in cable as illustrated in Figure 7-5.

1. Single-loop 6 by 6 feet, three turns, with 100 feet of lead-in (80-105 microhenries).
2. Single-loop 6 by 6 feet, three turns with 1000 feet of lead-in (260-320 microhenries).
3. Four loops 6 by 6 feet, three turns, in a row in the direction of travel and separated by 9 feet, series/parallel-connected with 250 feet of lead-in (110-140 microhenries).

NEMA Standard 1-29-1981.

7.2.12 Test Vehicle Definition

Detector units shall detect all vehicles which ordinarily traverse the public streets and highways and which are comprised of sufficient conductive material suitably located to permit recognition and response by the detector system.

Vehicles are classified by this standard in accordance with the reduction in inductance resulting when they are centered in the single 6- by 6-foot, three-turn test loop with 100 feet of lead-in described in 7.2.11.

Copyright National Electrical Manufacturers Association
Provided by IHS under license with NEMA
No reproduction or networking permitted without license from IHS
Not for Resale

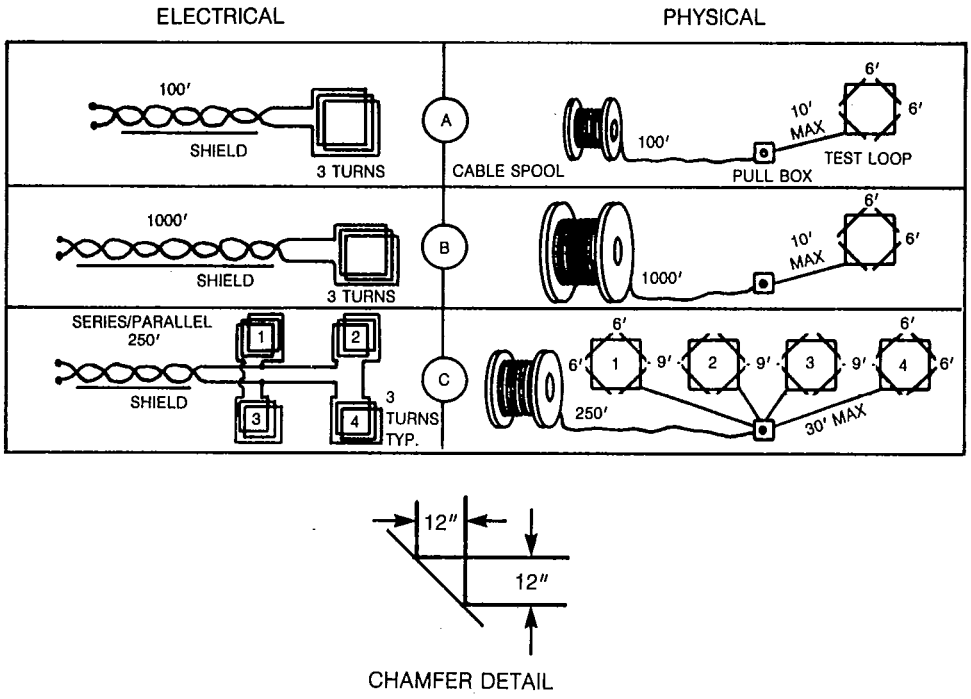

CONSTRUCTION—Loop dimension tolerances shall be ± 2 inches. Connections shall be soldered and waterproofed. Loops shall be installed in a nonreinforced pavement and located at least 3 feet from any conductive material. Lead-in cable shall be spooled. Loop leads shall exit at one corner of the loop structures. All loop corners shall be chamfered 12 inches.

LOOP WIRE—Each loop shall be three turns of AWG #14 cross-linked polyethelene insulated, stranded cooper wire, such as Belden 35614. Loop inductance shall be between 60-80 microhenries.

LEAD-IN-WIRE—The lead-in wire shall be AWG #14 twisted pair, aluminum polyester shield, polyethylene insulation, vinyl jacket, inductance between 20 μH and 24 μH per 100 feet, such as Belden 8720. For standardized test purposes, the shield shall be insulated from ground.

Field installation practices or detector unit design may require grounding the shield of the loop lead-in cable. Such grounding should be in accordance with the detector manufacturer's recommendation. (This paragraph is approved as Authorized Engineering Information.)

SAWSLOT—The conductors shall be placed at the bottom of a 1-1/2 ± 1/4-inch deep by 1/4-inch wide sawslot. Pavement sawslot shall be filled with a suitable epoxy or equivalent sealant.

Figure 7-5
TEST LOOP CONFIGURATIONS

Copyright National Electrical Manufacturers Association
Provided by IHS under license with NEMA
No reproduction or networking permitted without license from IHS
Not for Resale

These minimum reductions are as follows:

Class 1—0.13% $\left(\frac{\Delta l}{l}\right)$ or 0.12 microhenries (Δl) inductance change with a single 6 × 6 ft three turn loop with 100 ft lead-in (small motorcycle)

Class 2—0.32% $\left(\frac{\Delta l}{l}\right)$ or 0.3 microhenries (Δl) inductance change with a single 6 × 6 ft three turn loop with 100 ft lead-in (large motorcycles)

Class 3—3.2% $\left(\frac{\Delta l}{l}\right)$ or 3.0 microhenries (Δl) inductance change with a single 6 × 6 ft three turn loop with 100 ft lead-in (automobile)

The maximum-reduction caused by any test vehicle shall be 5.4% $\left(\frac{\Delta l}{l}\right)$ or 5 microhenries (Δl) inductance change with a single 6 × 6 ft three turn loop with 100 ft lead-in.

NEMA Standard 4-7-1983.

7.2.13 Sensitivity

The detector unit shall be capable of detecting any of the vehicles defined in 7.2.12 on any of the test loops defined in 7.2.11.

NEMA Standard 4-7-1983.

7.2.14 Sensitivity Control

When detecting test vehicles as described in 7.2.12 and operating on any of the test loop configurations described in 7.2.11, each channel of the detector unit shall include means to adjust the sensitivity such that it shall not produce an output when the nearest point of any test vehicle of 7.2.12 is 36 inches or more outside the loop(s) perimeter. A minimum of three sensitivity selections shall be provided for each detection channel.

NEMA Standard 1-29-1981.

7.2.15 Approach Speed

The detector unit shall detect any vehicle described in 7.2.12 over any of the single loops described in 7.2.11 traveling within the speed range of 5 to 80 miles per hour.

The detector unit shall detect any vehicle described in 7.2.12 over all of the loops of the four loop configurations described in 7.2.11 traveling within the speed range of 5 to 20 miles per hour.

All channels of a multichannel detector shall be operating at the same sensitivity and connected to equivalent inductances for the purpose of these tests.

NEMA Standard 1-29-1981.

7.2.16 Modes of Operation

Each detector channel shall be capable of functioning in the following two front panel selectable modes:

1. *Presence*—When a Class 2 vehicle (0.3 microhenry), defined in 7.2.12, or a larger vehicle occupies the center of any of the test loops described in 7.2.11, the detector unit shall be capable of maintaining a detection output for a minimum of 3 minutes.

2. *Pulse*—A detection output between 75 and 150 milliseconds shall be initiated when a vehicle enters the sensor loop zone of detection.

If this vehicle remains in the zone of detection, the detector unit shall become responsive within a maximum of 4 minutes to additional test vehicles entering the zone of detection.

The detector unit shall produce one and only one output pulse for a test vehicle traveling at 10 miles per hour across the zone of detection of the single sensor loops defined in 7.2.11.

NEMA Standard 4-7-1983.

7.2.17 Recovery from Sustained Occupancy

When operating in the presence mode, and following a sustained occupancy of 5 minutes, the detector unit shall recover to normal operation with at least 90 percent of the sensitivity specified in 7.2.13 within 1 second after the zone of detection is vacated.

NEMA Standard 4-7-1983.

7.2.18 Response Time

When operating in the presence mode, the detector unit shall be capable of being set to produce an output in response to a 0.12-microhenry step decrease in inductance (equivalent to the minimum decrease from a Class 1 vehicle defined in 7.2.12) within not more than 125 milliseconds when tested on either of the single loop test configurations described in 7.2.11. In response to a step return to the original inductance, the detector unit shall terminate its output within not more than 125 milliseconds.

When operating in the presence mode, the detector unit shall be capable of being set to produce an output in response to a 3-microhenry step decrease in inductance (equivalent to the minimum decrease from a Class 3 vehicle defined in 7.2.12) within not more than 50 milliseconds when tested on either of the single loop test configurations described in 7.2.11. In response to a step return to the original inductance, the detector unit shall terminate its output within not more than 50 milliseconds.

All channels of a multi-channel detector shall be operating at the same sensitivity and connected to equivalent inductances for the purpose of these tests.

NEMA Standard 4-7-1983.

Copyright National Electrical Manufacturers Association
Provided by IHS under license with NEMA
No reproduction or networking permitted without license from IHS

Not for Resale

For certain specific surveillance applications involving vehicle speeds in excess of 45 miles per hour, more precise response times might be required.

Authorized Engineering Information 1-29-1981.

7.2.19 Tuning

Each detector channel shall include one of the following means for accommodating the range of sensor loop/lead-in inductance.

7.2.19.1 Manual Tuning

The unit shall be capable of being tuned by an operator using one or more tuning controls. All necessary tuning controls shall be located on the front panel of the unit. It shall be possible to complete tuning within 3 minutes after the application of power. The unit shall achieve normal operation and at least 90 percent of its selected sensitivity within 3 minutes following tuning.

7.2.19.2 Self Tuning

The unit shall tune automatically upon the application of power. It shall achieve normal operation and at least 90 percent of its selected sensitivity within 3 minutes after application of power.

NEMA Standard 1-29-1981.

7.2.20 Self Tracking

The detector unit shall automatically accommodate those after-tuning changes in the loop/lead-in electrical characteristics as might reasonably be expected to occur in undamaged loops, properly installed in sound pavement and exhibiting the electrical properties outlined in 7.2.10, without producing a false output or change in sensitivity.

NEMA Standard 1-29-1981.

7.2.21 Recovery from Power Interruption

After a power interruption longer than 20 milliseconds, the detector unit shall resume normal operation with at least 90 percent of its selected sensitivity within 3 minutes after the main supply voltage recovers to a voltage within the specified limits.

NEMA Standard 1-29-1981.

7.2.22 Crosstalk Avoidance

Each detector channel shall include means to prevent that channel from adversely interacting with any other channel. The means to prevent such interaction shall be inherent, automatic or manual.

NEMA Standard 1-29-1981.

7.2.23 Controls and Indicators

All controls and indicators necessary for the operation of the detector unit shall be located on the front panel of the unit except as noted below. Multiple functions combined in a single control shall be permitted. These include, but are not limited to:

1. *Output Indicator*—Means to visually indicate the output state of each channel. Each channel shall have a separate indicator.
2. *Sensitivity Control*—Means to permit selection of the sensitivity of each channel as described in 7.2.14.
3. *Overcurrent Protection Device*—Required for ac-powered units. If the overcurrent protection device on an ac-powered unit is a fuse or circuit breaker, it shall be accessible from the front panel. Internal mounting of any other overcurrent protection device shall be permitted.
4. *Manual Tuning Control*—When required, permits accommodation of the range of loop/lead-in inductances.
5. *Reset*—A control which unconditionally causes the detector or detection channel to retune to a nonvehicle present condition.
6. *Mode Selector*—Means to permit selection of pulse or presence mode operation of each channel. Card mounting of this control shall be permitted on card rack units.
7. *Crosstalk Control*—As required, provides means to prevent interaction of channels as described in 7.2.22. Card mounting of this control shall be permitted on card rack units.

NEMA Standard 1-29-1981.

7.2.24 Output

This standard defines two devices for output interfacing. Detector units shall be configured to have one of these devices as defined in 7.2.2.

7.2.24.1 Relay

1. *Contacts Closed*—Indicate detection output.
2. *Power Outage or Overcurrent Failure Condition*—Contacts closed indicate detection output.
3. *Output Circuit Isolation*
   a. Resistance 10^6 ohms minimum.
   b. Breakdown 1000 volts rms minimum.
4. *Contact Rating (Resistive Load)*
   a. 2 milliamperes through 1 ampere at 18 to 28 volts.
   b. 0.5 amp at 120 volts ac.
   c. Maximum closed contact resistance—1 ohm.
5. *Mounting*—Plug-in with socket or direct solder mounting.
6. *Minimum Operations*
   10^6 with contacts at rated load.
   10^7 total mechanical.

Copyright National Electrical Manufacturers Association
Provided by IHS under license with NEMA
No reproduction or networking permitted without license from IHS
Not for Resale

7.2.24.2 Solid State (Isolated)

1. *Output Solid State Device*—Conducting indicates detection output.
2. *Power Outage or Fuse Failure Condition*—Output device is nonconductive indicating a no detection output condition.
3. *Output Circuit Isolation*
   a. Resistance 10^6 ohms minimum.
   b. Breakdown 1000 volts rms minimum.
4. *Output Rating*—The output shall conduct a minimum of 20 milliamperes with a maximum 1.4-volt drop across the output terminals.
5. *Transition Time*—When switching to or from a steady-state current in the range of 2.4 to 20 ma., the transition time from 6 to 16 volts and vice versa shall be 0.1 milliseconds or less. The circuit(s) to which the output is connected is defined in 13.2.3 (this sentence is approved as Authorized Engineering Information).
6. *Maximum Voltage*—Hold off 30 VDC minimum under nondetect conditions.

NEMA Standard 1-29-1981.

7.2.25 Electrical Connections

7.2.25.1 Single-channel, Shelf-mounted Detector

1. *Relay Output*—Shall mate with cable connector MS3106A-18-1S. Input-output connector pin termination shall be as follows:
   A. AC− (common)
   B. Relay Common
   C. AC+ (line side)
   D. Loop input
   E. Loop input
   F. Output continuity to common during detect (normally open)
   G. Reserved‡
   H. Chassis ground
   I. No connection
   J. Reserved for future use

‡ May be connected to the normally closed output of the relay—for special function use only. During normal operation, standard detector functions as defined in this standard will not require a connection to this pin. Detector unit harness will not normally contain a wire connected to pin G.

Authorized Engineering Information 4-7-1983.

2. Solid State Output (Isolated)—Shall mate with cable connector MS3106A-18-1SW.

Input-output connector pin terminations shall be as follows:
   A. AC− (common)
   B. Output (−)
   C. AC+ (line side)
   D. Loop input
   E. Loop input
   F. Output (+)
   G. Reserved
   H. Chassis ground
   I. Reserved for future use
   J. Reserved for future use

The unit is not interchangeable with a single channel detector with a relay output (Authorized Engineering Information 4-7-1983).

7.2.25.2 Two and Four-channel, Shelf-Mounted Detectors

1. *Relay Output, 2-channel*

Shall have two connectors each of which shall mate with cable connector MS3106A-18-1S.

A relay output unit is not interchangeable with a solid-state output unit due to the rotation of the connector insert (Authorized Engineering Information 4-7-1983).

Input-output connector pin terminations shall be as follows:

Channel 1, Connector
   A. AC− (common)
   B. Relay Common, Ch 1
   C. AC+ (line side)
   D. Loop input, Ch 1
   E. Loop input, Ch 1
   F. Normally open output, Ch 1 (Continuity to Common during detect)
   G. Reserved**
   H. Chassis ground
   I. No connection
   J. No connection

Channel 2, Connector
   A. No connection
   B. Relay Common, Ch 2
   C. No connection
   D. Loop input, Ch 2
   E. Loop input, Ch 2
   F. Normally open output, Ch 2 (Continuity to Common during detect)
   G. Reserved**
   H. Chassis ground
   I. No connection
   J. No connection

** May be connected to the normally closed output of the relay—for special function use only. During normal operation, standard detector functions as defined in this standard will not require a connection to this pin. Detector unit harnesses will not normally contain a wire connected to pin G (Authorized Engineering Information 4-7-1983).

2. *Solid-state Output (Isolated) 2-channel*

Shall have two connectors, each of which shall mate with cable connector MS3106A-18-1SW. A relay output unit is not interchangeable with a solid-state output unit due to rotation of the connector insert (Authorized En-

Copyright National Electrical Manufacturers Association
Provided by IHS under license with NEMA
No reproduction or networking permitted without license from IHS
Not for Resale

gineering Information). Input-output connector pin terminations shall be as follows:

Channel 1, Connector

A. AC− (common)
B. Output, Ch 1 (−)
C. AC+ (line side)
D. Loop input, Ch 1
E. Loop input, Ch 1
F. Output, Ch 1 (+)
G. Spare
H. Chassis Ground
I. No connection
J. No connection

Channel 2, Connector

A. No connection
B. Output, Ch 2 (−)
C. No connection
D. Loop input, Ch 2
E. Loop input, Ch 2
F. Output, Ch 2 (+)
G. Spare
H. Chassis Ground
I. No connection
J. No connection

3. *Solid-state Output, 2 and 4 Channel "D" Connector*

Shall mate with 25-pin D subminiature connector, ITT Cannon DBU 25S, or equivalent. The connector retainer shall be a sliding lock type, ITT Cannon DB 51221-1, or equivalent, located on the harness mating connector and oriented such that it locks when the slide is moved in the direction shown in Figure 7-6. Input-output connector pin terminations shall be as follows:

1. AC+ (line side)
2. Reserved
3. Chassis Ground
4. Loop input, Ch 4
5. Loop input, Ch 3
6. Loop input, Ch 2
7. Loop input, Ch 1
8. +24 VDC Supply Input
9. Output Ch 4 (+)***
10. Output Ch 3 (+)***
11. Output Ch 2 (+)
12. Output Ch 1 (+)
13. No connection
14. Reserved
15. AC− (common)
16. Loop input, Ch 4
17. Loop input, Ch 3
18. Loop input, Ch 2
19. Loop input, Ch 1
20. Spare
21. Output, Ch 4 (−)***
22. Output, Ch 3 (−)***
23. Output, Ch 2 (−)

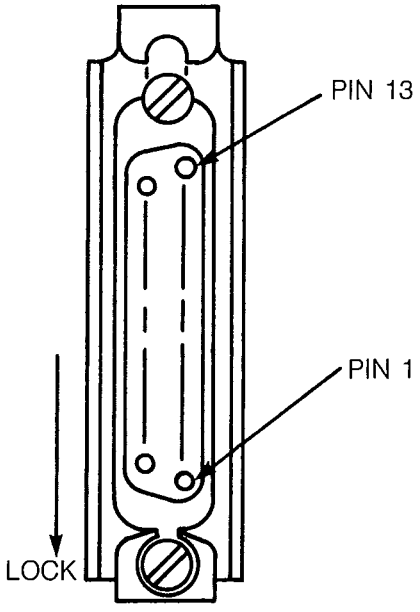

HARNESS MATING CONNECTOR SHOWN IN UNLOCKED POSITION

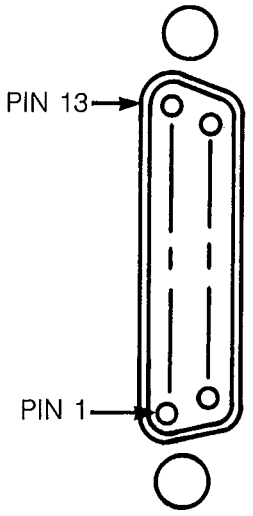

FRONT PANEL CONNECTOR

Figure 7-6

Copyright National Electrical Manufacturers Association
Provided by IHS under license with NEMA
No reproduction or networking permitted without license from IHS
Not for Resale

24. Output, Ch 1 (−)
25. No connection

*** Two channel units shall have pins 9 and 21 connected within the unit and pins 10 and 22 connected within the unit.

7.2.25.3 Card Rack—Two- and Four-channel

Two- and four-channel card racks shall mate with a 44-terminal, double-row, 0.156-inch contact spacing, Cinch Jones card edge connection 50-44A-30M, or equivalent. Input-output connector pin terminations shall be as follows:

A. Logic ground	1. No connection
B. +24 VDC supply	2. No connection
C. Reserved for future use	3. Spare
D. Loop input, Ch 1	4. Redundant loop input, Ch 1 (optional)
E. Loop input, Ch 1	5. Redundant loop input, Ch 1 (optional)
F. Output, Ch 1 (+)	6. Spare
H. Output, Ch 1 (−)	7. Spare
J. Loop input, Ch 2	8. Redundant loop input, Ch 2 (optional)
K. Loop input, Ch 2	9. Redundant loop input, Ch 2 (optional
L. Chassis ground	10. Spare
M. Reserved	11. Reserved
N. Reserved	12. Reserved
P. Loop input, Ch 3	13. Redundant loop input, Ch 3 (optional)
R. Loop input, Ch 3	14. Redundant loop input, Ch 3 (optional)
S. Output, Ch 3 (−)	15. Spare
T. Output, Ch 3 (−)	16. Spare
U. Loop input, Ch 4	17. Redundant loop input, Ch 4 (optional)
V. Loop input, Ch 4	18. Redundant loop input, Ch 4 (optional)
W. Output, Ch 2(+)	19. Spare
X. Output, Ch 2 (−)	20. Spare
Y. Output, ch 4 (+)	21. Spare
Z. Output, Ch 4 (−)	22. Spare

Polarization keys shall be located at three positions:

1. Between B/2 and C/3
2. Between M/11 and N/12
3. Between E/5 and F/6

Two-channel units shall have no connection to pins P, R, S, T, U, V, Y, Z, 13, 14, 17, and 18.

NEMA Standard 1-29-1981.

Copyright National Electrical Manufacturers Association
Provided by IHS under license with NEMA
No reproduction or networking permitted without license from IHS
Not for Resale

Section 8
SOLID STATE FLASHERS

These standards define solid-state flashers which are used to periodically interrupt a source of alternating-current line power for the purpose of providing flashing traffic signals. For the purpose of these standards, the term "solid state" shall be construed to mean that the main current to the signal load is not switched by electro-mechanically operated contacts.

8.1 TYPES OF FLASHERS

Flashers shall be one of the following types:
Type 1—20 amperes, single-circuit.
Type 2—10 amperes, dual-circuit.
Type 3—15 amperes, dual-circuit.

NEMA Standard 7-12-1978.

8.2 PHYSICAL CHARACTERISTICS

8.2.1

The overall dimensions of the flasher shall not exceed 8.75 inches from the panel surface holding the mating connector, including any handle or gripping device. The flasher shall be no more than 1.9 inches in width and no more than 4.2 inches high.

8.2.2

The flasher shall intermate with a Cinch-Jones socket type S-406-SB or equivalent.

8.2.3

The flasher shall be so constructed that its lower surface will be no more than 2.100 inches below the centerline of the connector configuration.

8.2.4

Be so constructed that no part of it will extend more than 0.900 inch to the left and 1.100 inches to the right of the centerline of the connector pin configuration as viewed from the front. See Figure 8-1.

8.2.5

Be so constructed that personnel inserting or removing the module will not be exposed to live parts nor be required to insert either their hands or fingers into a load rack.

8.2.6

All printed circuit boards shall be made from NEMA (FR-4) glass-epoxy, or equivalent (see NEMA Standards Publication for *Industrial Laminated Thermosetting Products,* Publication No. LI 1-1982). Circuit boards exceeding 2 inches in any dimension shall have a nominal thickness of at least 1/16 inch. Circuit boards not exceeding 2 inches in any dimension shall have a nominal thickness of at least 1/32 inch.

The walls of all plated through holes shall have a minimum copper plating thickness of 0.001 inch. All circuit tracks will have a conductivity equivalent to at least 2 ounces per square foot of copper. All electrical mating surfaces shall be made of non-corrosive material.

The unit shall be designed so that each component is identified by a circuit reference symbol. This identification may be affixed to the printed circuit board(s), the cover of the unit, or in an assembly drawing provided with the unit.

NEMA Standard 7-12-1978.

TYPICAL FLASHER LOCATION

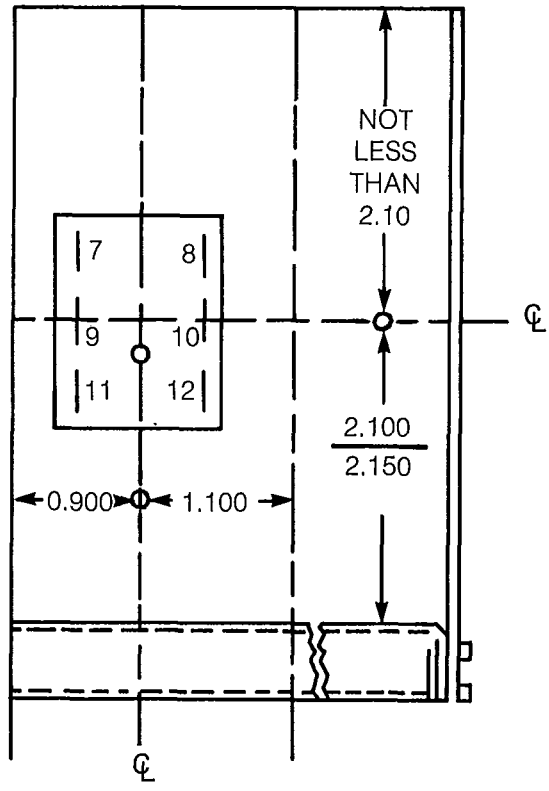

Figure 8-1
MOUNTING RACK DIMENSIONS

NOTE—All Dimensions in Inches.

Copyright National Electrical Manufacturers Association
Provided by IHS under license with NEMA
No reproduction or networking permitted without license from IHS
Not for Resale

8.3 ELECTRICAL CHARACTERISTICS

Flashers shall have the following electrical characteristics:

8.3.1

The rating of the output circuit shall be the minimum rating for a tungsten-lamp or gas-tubing-transformer load over a voltage range of 60 to 135 volts at 60 hertz and shall not be derated for operation over the ambient temperature range of −30° to +165°F (− 34° to 74°C) and the humidity range as both detailed in 2.1.5.

8.3.2

Input to the solid-state flasher shall consist solely of the 60-hertz alternating-current power source. This input shall supply the power for the output circuit and also provide power to the flasher logic. The flasher shall turn on within 5 degrees of the zero voltage point of the alternating-current line sinusoid and shall turn off within 5 degrees of the zero current point of the alternating-current line sinusoid. The flasher need not turn on within 5 degrees of the zero point of the alternating-current sinusoid for the first flash cycle (on-off cycle) after the initial application of alternating-current power to the flasher.

8.3.3

The "flashing" voltage output shall provide not less than 50 nor more than 60 flashes per minute with an on period of 50 ± 5 percent.

8.3.4

The flasher output shall have a dv/dt rating of 100 volts per microsecond at 70°F (21°C), when tested as shown in Figure 8-2.

8.3.5

The flasher output shall have a peak stand-off voltage of 500 volts or greater at 70°F (21°C), when tested as shown in Figure 8-2.

8.3.6

The output current from the flasher through the load when the flasher is in the off state shall not exceed a maximum of 15 milliamperes rms.

NEMA Standard 4-7-1983.

8.4 TYPE 1 FLASHER, SINGLE-CIRCUIT, 20 AMPERES

8.4.1 Electrical Characteristics

The electrical characteristics shall be the same as given in 8.3, and in addition:

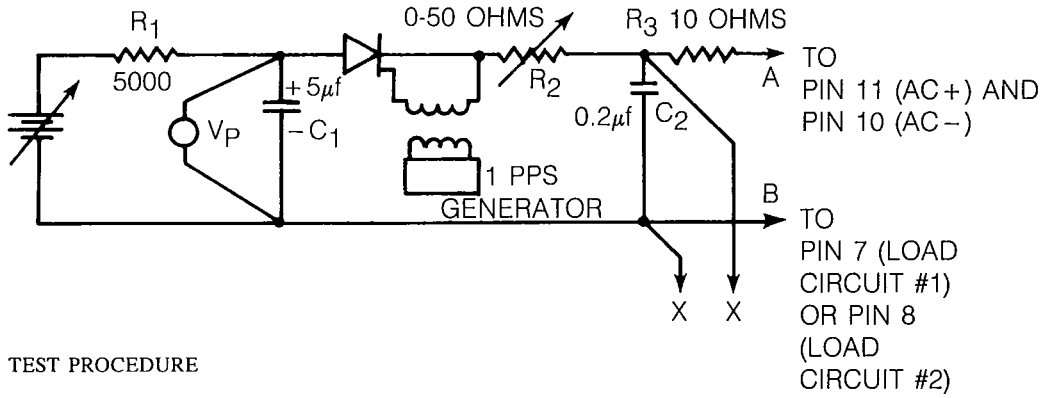

TEST PROCEDURE

1. Connect pins 10 and 11 of the flasher.
2. Set Vp to 500 Vdc.
3. Decrease R_2 until the flasher generates an output or the minimum resistance is reached. If the flasher fails, back off R_2 slightly to a higher resistance point at which the flasher just passes.
4. Measure time required for wave at points XX to reach 200 volts—dv/dt = 200/time measured.
5. Repeat the test with connector pins A and B reversed.
6. NOTES:
   a. A failure of the flasher for either dv/dt or PIV will result in the Vp meter dipping or flickering.
   b. R_2 and R_3 are carbon pile resistors (low inductive type.)
   c. On dual-circuit flashers the above tests must be run on each circuit separately.
   d. Load between XX must be between 500 K ohms and 250 megohms (reistive).

Figure 8-2
PIV AND DV/DT TEST CIRCUIT

Copyright National Electrical Manufacturers Association
Provided by IHS under license with NEMA
No reproduction or networking permitted without license from IHS
Not for Resale

1. The flashing output shall consist of one output rated at 20 amperes. The combined load connected to circuit 1 and circuit 2 shall not exceed 20 amperes.

2. Connector pin assignment shall be as shown in Figure 8-3.

8.4.2 Flasher Equivalent Circuit Diagram

See Figure 8-4.

NEMA Standard 7-12-1978.

8.5 TYPE 2 FLASHER, DUAL-CIRCUIT, 10 AMPERES PER CIRCUIT

8.5.1 Electrical Characteristics

The electrical characteristics shall be the same as given in 8.3, and in addition:

1. The flashing output shall consist of two outputs each rated at 10 amperes.

2. Flashers shall be so designed that circuit #1 will be essentially ON when circuit #2 is OFF, and vice versa. The principal purpose served by this arrangement is to smooth out the loading on the power source. The maximum OFF period when both circuit #1 and circuit #2 are OFF, or the maximum ON period when both circuit #1 and circuit #2 are ON, shall not exceed 17 milliseconds during the transition from OFF to ON and ON to OFF.

3. Connector pin assignments shall be as shown in Figure 8.3.

8.5.2 Flasher Equivalent Circuit Diagram

See Figure 8-5.

NEMA Standard 7-12-1978.

8.6 TYPE 3 FLASHER, DUAL-CIRCUIT, 15 AMPERES PER CIRCUIT

Type 3 flashers shall be the same as Type 2 flashers, except that the current rating of each output shall be 15 amperes.

NEMA Standard 7-12-1978.

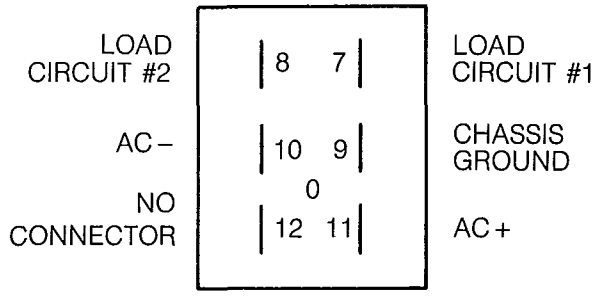

Figure 8-3
CONNECTOR PIN ASSIGNMENTS
SOLID-STATE FLASHERS
(VIEW-CONNECTOR END)

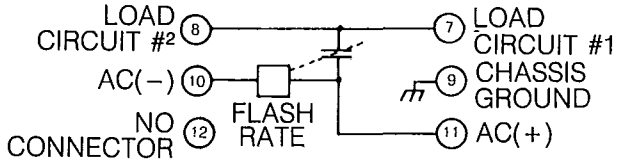

Figure 8-4
EQUIVALENT CIRCUIT DIAGRAM
SINGLE-CIRCUIT FLASHER

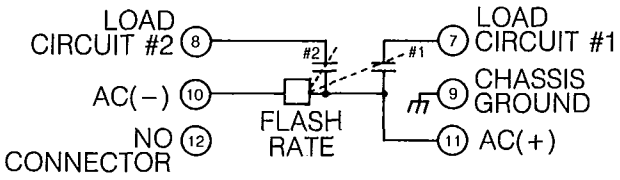

Figure 8-5
EQUIVALENT CIRCUIT DIAGRAM
DUAL-CIRCUIT FLASHER

Copyright National Electrical Manufacturers Association
Provided by IHS under license with NEMA
No reproduction or networking permitted without license from IHS
Not for Resale

Section 10
TERMINALS AND FACILITIES

These standards define the minimum requirements for terminals and facilities within the cabinet. Specific construction and performance standards are established for the purpose of achieving greater utility and safety. Clause 10.1 provides definitions. Clause 10.2 describes mechanical construction requirements. Clause 10.3 describes electrical requirements.

These standards define the performance and construction requirements of cabinet terminals and facilities that are considered to be of the attached or nonplug-in type. The emphasis is placed upon electrical requirements, cabling, supporting terminal facilities, and labeling.

Any tests or procedures referenced in this section of the standards publication are intended to facilitate type testing of equipment designs and are not intended to be performed on all production units.

10.1 DEFINITIONS

10.1.1 Cabinet

An outdoor enclosure designed for base, pedestal or pole mounting providing protection, support, ventilation and security for the enclosed facilities and equipment.

NEMA Standard 10-16-1985.

10.1.2 Flash Bus

A flash bus is an ac+ feed supplying flashing power to the flash-transfer device(s) from an output of a flasher.

NEMA Standard 10-16-1985.

10.1.3 Ground

An electrical connection between a circuit or piece of equipment and the earth.

NEMA Standard 10-16-1985.

10.1.4 Logic Ground

Voltage reference point and current return for logic circuits.

NEMA Standard 10-16-1985.

10.1.5 Primary Feed

The primary feed is the 120 vac single phase input to the cabinet from the local power distribution system. The primary feed includes the neutral conductor.

NEMA Standard 10-16-1985.

10.1.6 Signal Bus

The signal bus is the ac+ feed supplying power to the signal load switches from the output of the signal bus relay.

NEMA Standard 10-16-1985.

10.1.7 Terminal(s)

A terminal is an electrically conductive member serving as a junction to electrically connect two or more conductors and to also provide a means to individually connect or disconnect conductors.

NEMA Standard 10-16-1985.

10.2 MECHANICAL CONSTRUCTION

10.2.1 Material

All ferrous metal parts shall be protected against corrosion. All materials shall be moisture and fungus resistant.

NEMA Standard 10-16-1985.

10.2.2 Terminal Identification

Each electrical terminal within the facilities shall be uniquely identified and shall be referenced by the cabinet wiring diagram.

Terminal(s) nomenclature shall be adjacent to the terminal(s). The nomenclature for terminals accessible from the front of a panel shall be visible from the front of the panel. Nomenclature shall be permanent and legible.

NEMA Standard 10-16-1985.

10.2.3 Component Identification

All load switches, relays, flasher(s), circuit breakers, fuses, and switches within the facilities shall be uniquely identified, and shall be referenced on the cabinet diagram.

Component nomenclature on nonplug-in devices shall be on or adjacent to the component. Component nomenclature for plug-in devices shall be adjacent to the receptacle for the device. Nomenclature shall be permanent and legible.

NEMA Standard 10-16-1985.

Copyright National Electrical Manufacturers Association
Provided by IHS under license with NEMA
No reproduction or networking permitted without license from IHS

Not for Resale

10.2.4 Load Switch and Flasher Support

At least one point of support shall be provided to the load switch or flasher within the area designated as the area of required support as shown in Figure 10-1. Flasher and load switch bases shall be mounted so that they are oriented in the manner shown in Figure 10-2 or 10-3.

At least 50% of the area above and beneath the load switch or flasher, between ½ and 1½ inches either side of the centerline of the device, shall be open to allow for the free flow of air across the load switches or flashers. There shall be no obstruction within one inch above and below the units within the open area.

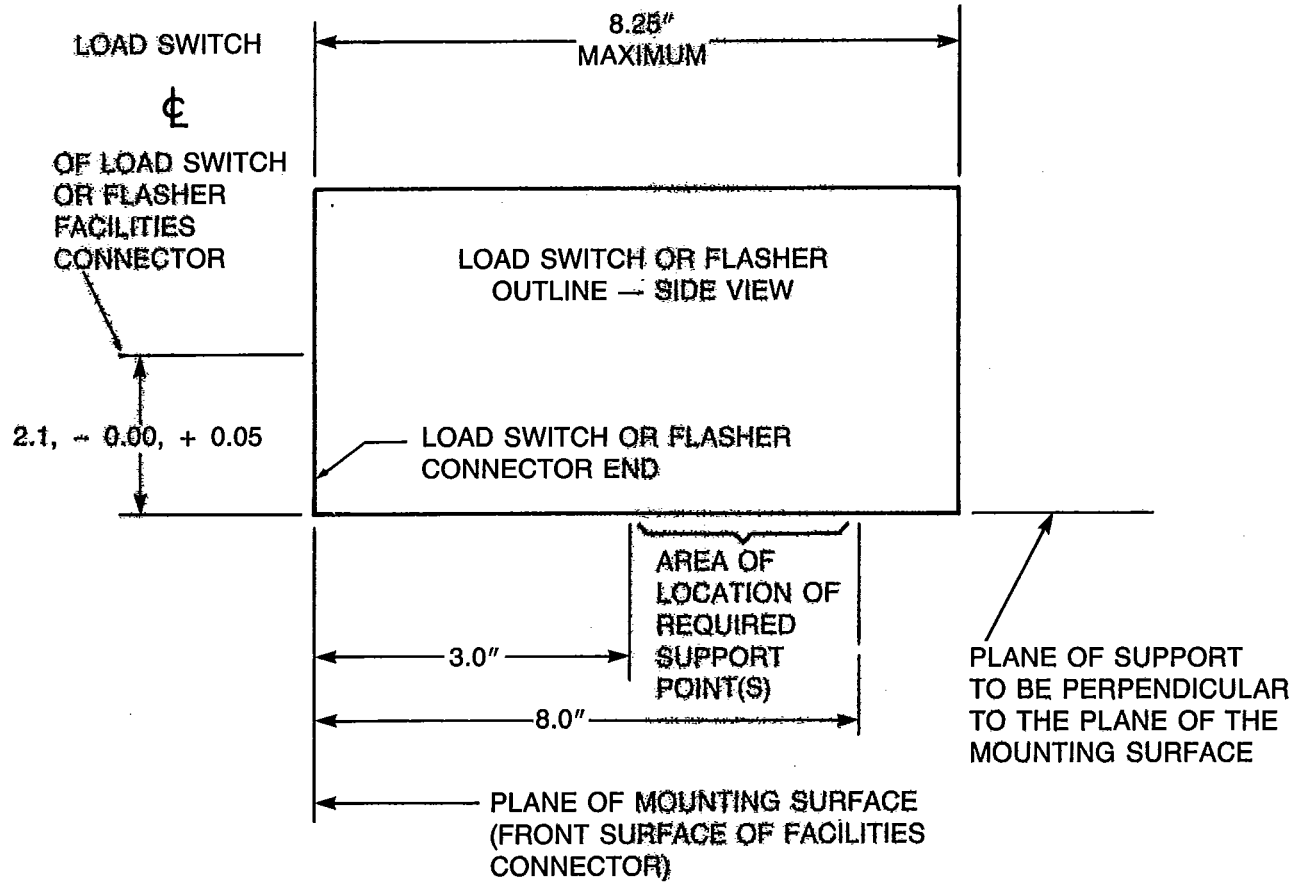

Figure 10-1
LOAD SWITCH OR FLASHER SUPPORT

Copyright National Electrical Manufacturers Association
Provided by IHS under license with NEMA
No reproduction or networking permitted without license from IHS
Not for Resale

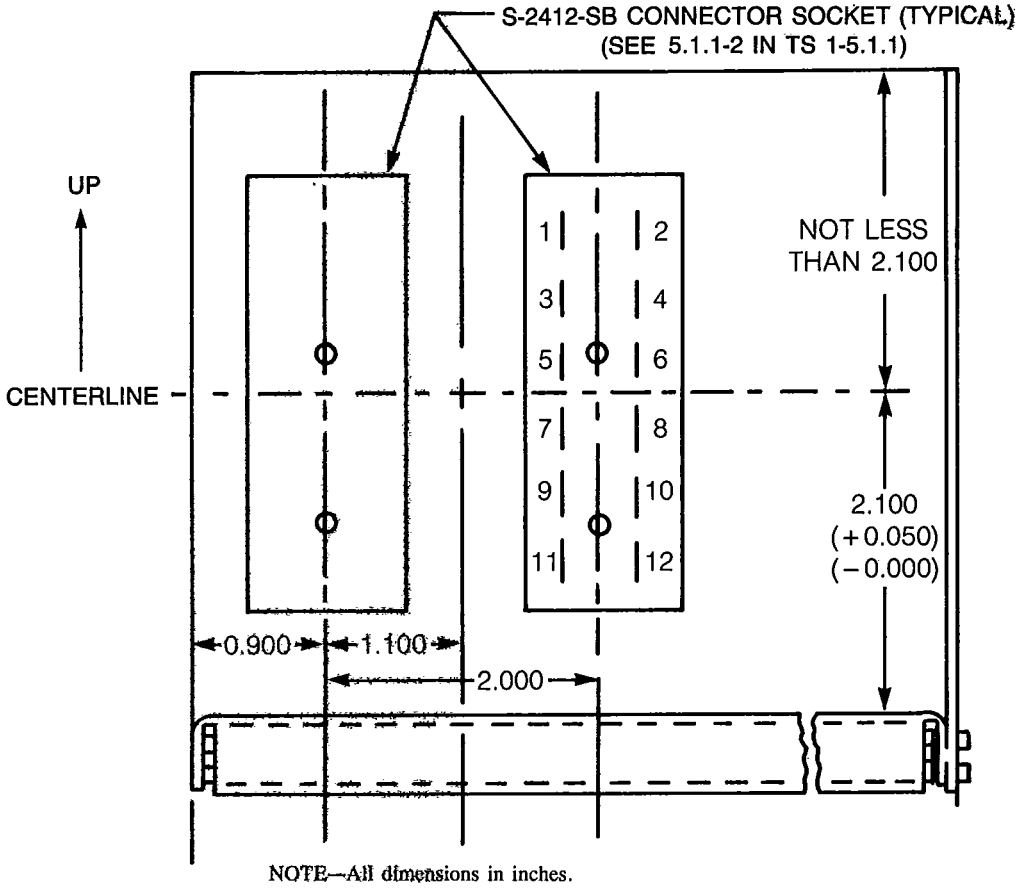

Figure 10-2
FRONT VIEW—LOAD RACK DIMENSIONS

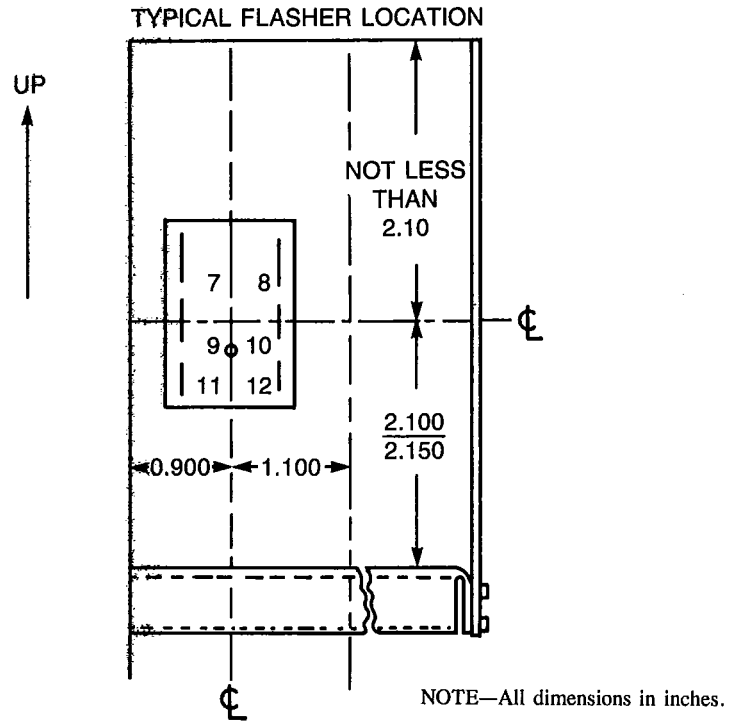

Figure 10-3
FRONT VIEW—FLASHER RACK DIMENSIONS

Copyright National Electrical Manufacturers Association
Provided by IHS under license with NEMA
No reproduction or networking permitted without license from IHS
Not for Resale

10.2.5 Field Terminal Blocks

10.2.5.1 GENERAL

Terminals for signal heads, detectors, primary feed, and interconnections shall meet the requirements of 10.2.5, including Table 10-1.

Table 10-1
FIELD TERMINALS

Function	Terminal Type	Terminal Size	Characteristics
Signal Feeds	Screw	#8 or larger 5/16″ or longer	Barrier Block 10 Amperes min.
Detector Lead-In	Screw	#6 or larger 1/4″ or longer	Barrier Block
Primary Feeds	Compression	Not Applicable	Shall terminate as a minimum one #6 AWG wire
Earth Ground	Compression	Not Applicable	Shall terminate as a minimum one #8 AWG wire

[1]Terminal connections shall be made with slotted head screws.

[2]The threaded portion of the terminal block shall be metal. Screws and threaded portions of the terminal block shall be brass or stainless steel.

[3]Materials used in terminals shall be compatible with copper wire.

[4]A terminal block shall be capable of withstanding without breakdown for one minute the application of a 60 Hz sinusoidal potential of 600 volts rms applied to the terminal between live parts that are not conductively interconnected and between live parts and the surface to which the terminal block is mounted.

[5]Terminal blocks shall have mechanical characteristics to properly support wiring without warping the block.

10.2.5.2 NUMBER AND SIZE OF TERMINALS

1. One terminal shall be provided for each load switch output.
2. It shall be possible to terminate a minimum of 16 #14 AWG or 5 #10 AWG neutral leads.
3. Three adjacent terminals shall be provided for each detector channel.

Field installation practices or detector unit design may require connecting the shield of the loop lead-in cable to the terminal. (This sentence is approved as Authorized Engineering Information.)

10.2.5.3 FIELD TERMINAL LOCATIONS

Field terminals shall be located on the lower half of the back or side of the cabinet. Terminals shall be mounted not less than six inches from the bottom of the cabinet in ground or foundation mounted cabinets. This distance shall be not less than three inches in cabinets mounted in other configurations. These terminals shall be readily accessible from the front of the cabinet.

NEMA Standard 10-16-1985.

10.2.6 Terminal Types and Practices

1. All terminals exposed in normal operation carrying 120 vac shall be covered unless otherwise protected by recessing or by terminal strip barriers. This includes all terminals exposed when the front door of the cabinet is open and all panels and covers are in their normal operating position.
2. All NEMA functions of the control unit, as specified in Table 10-2 for the configuration selected, shall be terminated.
3. All conflict monitor input channels that can be used to monitor the maximum number of signals available in a given configuration in Table 10-2 shall be terminated. Provision shall be made to terminate any unused red monitoring inputs.
4. The conflict monitor supply, control input and control output leads actually required to be used in a particular configuration shall be terminated.
5. Those detector leads actually required to be used in a particular application shall be terminated.

All other points not enumerated above, including "spare", "reserved", "manufacturers use only", and "no connection" shall not be required to be installed in the controller, monitor, or detector harnesses.

NEMA Standard 10-16-1985.

10.2.7 Load Switch and Flash Transfer Positions

Wired sockets shall be provided in the quantities listed in Table 10-2.

It shall be possible to flash either the yellow or red indication on any vehicle movement and to change from one color indication to the other by use of simple tools without the need to unsolder or resolder connections. All flash change terminals shall be accessible from the cabinet door opening without moving or disconnecting any equipment.

NEMA Standard 10-16-1985.

10.2.8 Auto/Flash Switch

The auto/flash switch shall be accessible to an operator when the cabinet door is open. The switch shall be rated by its manufacturer for the voltages and currents that may be expected to be present in the part of the control circuit where it is used.

The switch positions shall be labeled "AUTO" and "FLASH". In the "AUTO" position, this switch does not affect the normal operation of the facilities. In the "FLASH" position, the signal bus relay and flash transfer relays shall be de-energized, connecting the output(s) of the flasher to the appropriate field leads and interrupting the signal bus supply to the load switches.

NEMA Standard 10-16-1985.

Copyright National Electrical Manufacturers Association
Provided by IHS under license with NEMA
No reproduction or networking permitted without license from IHS
Not for Resale

Table 10-2
WIRED SOCKETS

Configuration	Controller Unit Size	Required Number of Vehicle Load Switch Sockets	Required Number of Overlap Load Switch Sockets	Required Number of Ped. Load Switch Sockets	Required Number of Flash Transformer Relay Sockets	Required Number of Flasher Switches
1	2-Phase	2	–	2	1	1
2	4-Phase	4	2	2	3	1
3	4-Phase	4	4	–	4	1
4	4-Phase	4	4	4	4	1
5	8-Phase	8	–	–	4	1
6	8-Phase	8	4	–	6	1
7	8-Phase	8	–	4	4	1
8	8-Phase	8	4	4	6	1

10.3 ELECTRICAL REQUIREMENTS

10.3.1 AC Service

The facilities shall operate properly when supplied with single-phase ac power, 95-135 volts, 60 ± 3 Hz.

NEMA Standard 10-16-1985.

10.3.2 Power Distribution Within Cabinet

(See Figure 10-4).

10.3.2.1 GROUNDING SYSTEM

The grounding system in the cabinet shall be divided into three separate and distinct circuits, all of which shall be connected together at a single point as shown in Figure 10-4.

The purpose of this requirement shall be to eliminate ground loops, adequately direct transients to ground, and to allow for testing of the separation between the grounding circuits by temporarily removing the jumpers.

1. The neutral bus is the set of terminals within the cabinet to which all of the neutral conductors are terminated. The neutral bus shall be a solid metallic multi-terminal strip located in close proximity to the primary feed entering the cabinet. Subsidiary neutral bus terminal strips may be located as necessary in the cabinet for use the control equipment. Neutral terminal strip(s) shall be insulated from the cabinet.
2. The ground bus is the set of terminals within the cabinet that is directly and permanently connected to the cabinet shell and the earth. The ground bus shall be a solid metallic multi-terminal strip located in close proximity to the power service entering the cabinet. This ground shall be connected to the cabinet shell in a manner that minimizes the length of the conducting path.

   It is intended that the ground bus be connected to a good earth ground such as a driven ground rod or rods within and through the cabinet foundation. (Authorized Engineering Information.)

   The chassis ground connection to each unit in the cabinet shall be run separately and directly to this terminal strip or to subsidiary ground busses. Each metallic connector shell on a cable carrying 115 VAC shall be connected to ground.
3. The logic ground bus is that set of terminals within the cabinet to which all logic ground conductors are terminated. All dc circuits shall use the logic ground as the return circuit to the controller unit.

10.3.2.2 DISCONNECTING MEANS

Type	Poles	Min. Amps	Interrupting Capacity
Main	1	30	5,000 amperes
Auxiliary	1	15	5,000 amperes

The rating of the main disconnect means with overcurrent protection shall be not less than 125% of the maximum anticipated continuous load. All disconnecting means when used shall be of the "trip-indicating trip-free" type.

10.3.2.3 SIGNAL BUS

The signal bus shall be connected to the incoming act

Copyright National Electrical Manufacturers Association
Provided by IHS under license with NEMA
No reproduction or networking permitted without license from IHS
Not for Resale

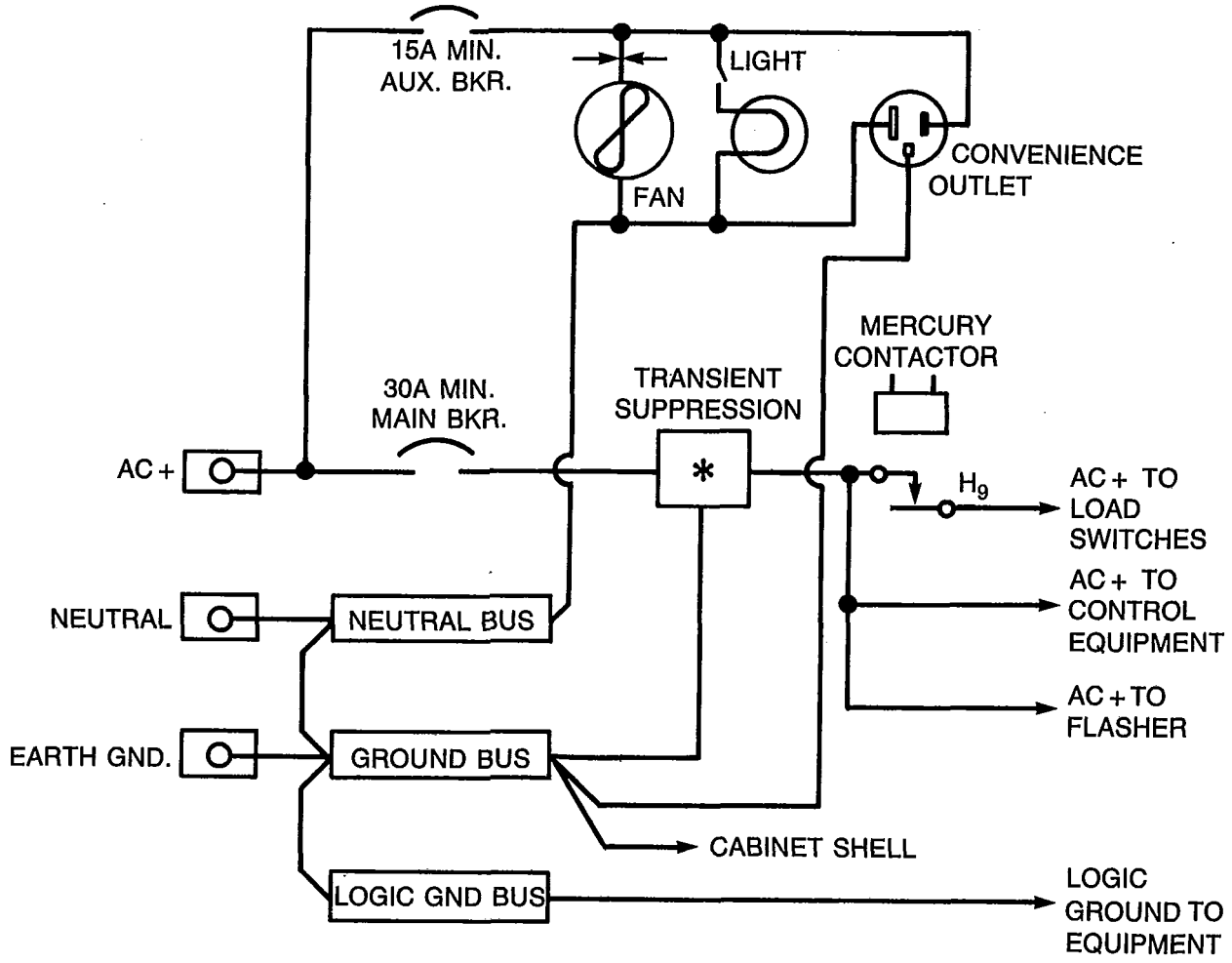

*Because the severity of naturally occurring transients is highly variable, the precise specification of these components is beyond the scope of this standard. (Authorized Engineering Information.)

Figure 10-4
CABINET POWER DISTRIBUTION

Copyright National Electrical Manufacturers Association
Provided by IHS under license with NEMA
No reproduction or networking permitted without license from IHS
Not for Resale

through a signal bus mercury contactor and a disconnect means with overcurrent protection. The signal bus mercury contactor shall be energized to provide power to the signal bus. The current rating of the signal bus mercury contactor shall be at least 80% of the current rating of the main disconnecting means with overcurrent protection.

10.3.2.4 AUXILIARY DEVICES

All cabinets shall have a fan, light and a convenience outlet.

NEMA Standard 10-16-1985.

10.3.3 Conductors

10.3.3.1 WIRE

1. All wire used in controller cabinets shall be copper. All wire # 14 AWG or smaller shall be stranded. Wires shall be sized per the ampacity ratings of Table 10-3.

Table 10-3
AMPACITY

AWG Wire Size	Ampacity Rating
30 - 24	0.25
22	2
20	4
18	5
16	10
14	15
12	20
10	30
8	50
6	70

2. Conductors 22 AWG and larger shall conform to military specification MIL-W-16878D, Electrical Insulated High Temperature Wire, type B, or the equivalent temperature rating. The insulation shall have a minimum thickness of 10 mils and shall be nylon jacketed polyvinyl chloride or shall be irradiated cross-linked polyvinyl chloride, polyethylene, polyhalocarbon, or polychloroalkene. Conductors #14 AWG or larger may be UL type THHN.
3. Conductors shall not be spliced between terminations.

10.3.3.2 PRINTED CIRCUITS

Printed circuits shall meet the following requirements:

1. All printed circuit boards shall be made from NEMA grade FR-4 glass epoxy or the equivalent. (See NEMA standards publication LI 1-1983, *Industrial Laminated Thermosetting Products.*) All circuit boards shall have a nominal thickness of at least 1/16 inch.
2. Plated-through holes shall be plated with the equivalent of one ounce per square foot of copper. All circuit tracks shall be at least two ounces per square foot of copper. All electrical mating surfaces shall be made of non-corrosive material.
3. Each AC circuit shall have sufficient current carrying capacity to enable the device protecting the circuit to open in a direct short circuit condition before the track is damaged in any manner.
4. If a plug-in base for a load switch, flasher, or flash relay is connected directly to a printed circuit board, the base shall be rigidly connected to another facility surface so that no mechanical strain is placed on the printed circuit solder connections when the plug-in device is inserted or removed.

NEMA Standard 10-16-1985.

10.3.4 Control Circuit

10.3.4.1 FLASH TRANSFER CONTROL

1. The coil of the flash transfer relay(s) shall be de-energized for flashing operation.
2. The flash transfer relay(s) shall be located in close proximity to the load switches, flasher, and signal field terminals.
3. Each relay shall be provided with circuitry to minimize the effects of residual magnetism.
4. Flash transfer relay sockets shall mate with a Cinch-Jones P2408 or equivalent. They shall be wired and space provided to accept a relay as described in Figure 10-5.

10.3.4.2 CONFLICT MONITOR

1. Interlock
   The facilities shall be so constructed that the intersection will revert to flashing operation if the conflict monitor is disconnected.
2. Red Monitor Enable
   The red monitor enable input to the conflict monitor shall be connected to the ac+ side of the signal bus relay coil.
3. 24 Volt Monitoring
   Conflict monitor input 24 v monitor shall be connected to the +24 volt feed to the load switches. 24 v monitor II shall be used to monitor any other 24 volt supply(s) required for safe operation of the intersection. If only one +24 volt power source is

Copyright National Electrical Manufacturers Association
Provided by IHS under license with NEMA
No reproduction or networking permitted without license from IHS
Not for Resale

used in the cabinet, 24 v monitor I and II shall be connected together.

4. Voltage Monitor
   The conflict monitor controller voltage monitor input shall be connected to the controller unit voltage monitor output.
5. Restart
   Actuation of the start-delay shall cause the controller to return to its pre-programmed start-up interval.
6. Stop Time
   Stop time shall be applied to all rings of the controller unit whenever the conflict monitor is in the fault condition.
7. Flash on Fault
   The conflict monitor shall place the intersection into flashing operation when in the fault condition.

NEMA Standard 10-16-1985.

OUTLINE DIMENSION DRAWING

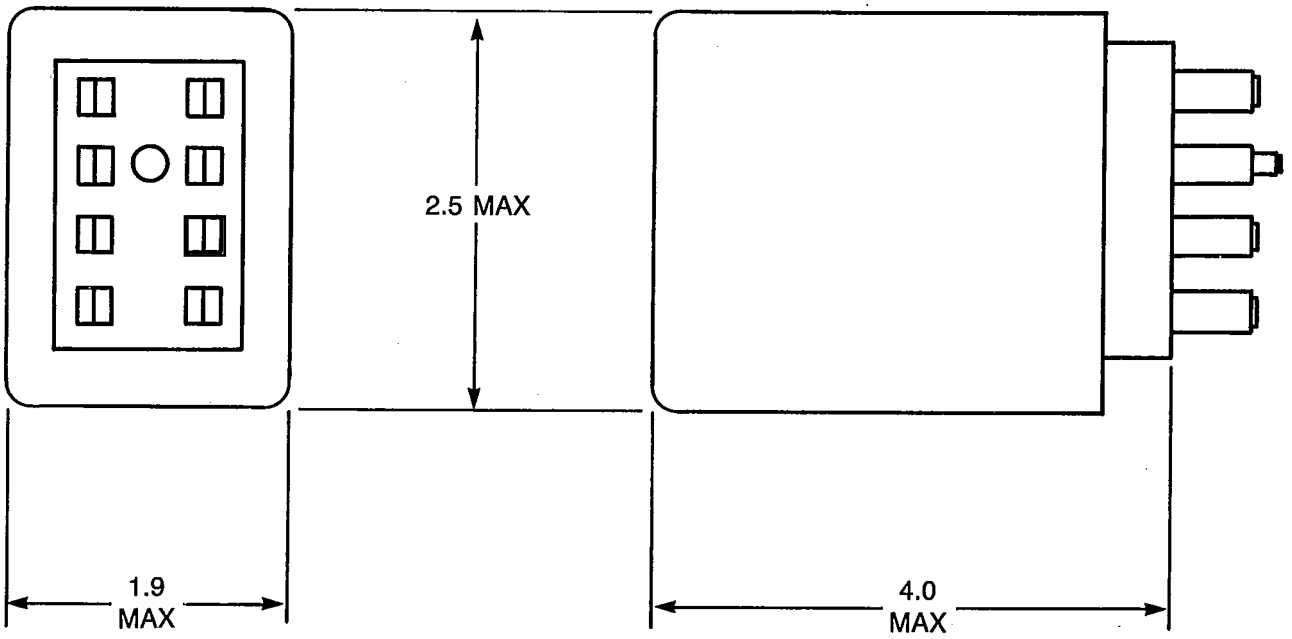

WIRING DIAGRAM

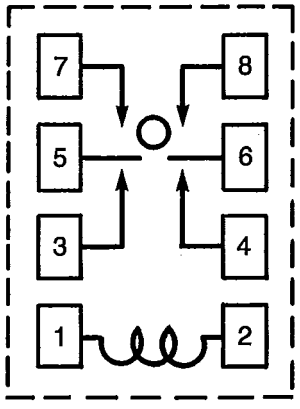

Figure 10-5
FLASH TRANSFER RELAY WIRING DIAGRAM AND OUTLINE DIMENSIONS

Copyright National Electrical Manufacturers Association
Provided by IHS under license with NEMA
No reproduction or networking permitted without license from IHS
Not for Resale

Section 11
INDUCTIVE LOOP DETECTORS WITH DELAY AND EXTENSION TIMING

Section 11 responds to the need for a vehicle loop detector which provides inputs for traffic-actuated or traffic-response control, surveillance or data collection systems, with additional inputs to provide functions not available in Section 7. The inductive loop detector responds to the presence of the vehicles on the roadway by relying upon the effect of the conductive mass of the vehicle on the alternating magnetic field of a loop. When a vehicle passes over the loop of wire imbedded in the surface of the roadway, it reacts with the alternating magnetic field which is associated with that loop.

These standards cover the performance and design requirements of interchangeable inductive loop detector units. A detector unit used with a sensor loop embedded in the surface of a roadway detects vehicles moving or standing in the detection zone of the sensor loop. The output of the loop detector unit may be used directly to provide an input to a vehicle actuated traffic controller unit or provide inputs to traffic responsive control and surveillance systems. Loop detectors generate outputs indicative of vehicles passing through the sensor loop zone of detection. This output may be used for counting (volume) or for presence time representative of the time that vehicles are in the sensor loop zone of detection (occupancy), or both.

These standards are applicable to detector units which employ either analog and/or digital techniques.

Authorized Engineering Information 4-7-1983.

11.1 LOOP DETECTOR DEFINITIONS

11.1.1 Vehicle Detector System

A system for indicating the presence or passage of vehicles.

NEMA Standard 4-7-1983.

11.1.2 Loop Detector System

A vehicle detector system that senses a decrease in inductance of its sensor loop(s) during the passage or presence of a vehicle in the zone of detection of the sensor loop(s).

NEMA Standard 4-7-1983.

11.1.3 Sensor Loop

An electrical conductor arranged to encompass a portion of roadway to provide a zone of detection and designed such that the passage or presence of a vehicle in the zone causes a decrease in the inductance of the loop that can be sensed for detection purposes.

NEMA Standard 4-7-1983.

11.1.4 Zone of Detection

That area of the roadway within which a vehicle is detected by a vehicle detector system.

NEMA Standard 4-7-1983.

11.1.5 Loop Detector Unit

An electronic device which is capable of energizing the sensor loop(s), of monitoring the sensor loop(s) inductance and of responding to a predetermined decrease in inductance with an output which indicates the passage or presence of vehicles in the zone of detection.

NEMA Standard 4-7-1983.

11.1.6 Channel

Electronic circuitry which functions as a loop detector unit.

NEMA Standard 4-7-1983.

11.1.7 Lead-In Cable

The electrical cable which serves to connect the sensor loop(s) to the input of the loop detector unit.

NEMA Standard 4-7-1983.

11.1.8 Detector Mode

A term used to describe the duration and conditions of the occurrence of a detector output.

NEMA Standard 4-7-1983.

11.1.9 Crosstalk

The adverse interaction of any channel of a detector unit with any other detector channel.

NEMA Standard 4-7-1983.

11.2 FUNCTIONAL STANDARDS

11.2.1 OPERATION

The inductive loop vehicle detector unit defined and described in this standard shall respond to change in the inductance of the sensor loop/lead-in combination(s) connected to its loop input terminals. It shall develop a detection output when there is a sufficiently large decrease in the magnitude of the connected inductance.

The sensor loop(s) connected to the detector unit input terminals shall be located at the intended zone(s) of detection. The sensor loop(s) shall be connected to the detector unit by means of lead-in cable.

Copyright National Electrical Manufacturers Association
Provided by IHS under license with NEMA
No reproduction or networking permitted without license from IHS

Not for Resale

The sensor loop(s) shall be so configured that the presence of a vehicle in each zone of detection causes a sufficient decrease in inductance to cause an output response from the detector unit.

NEMA Standard 4-7-1983.

11.2.2 Configurations and Dimensions

11.2.2.1 Configurations

This standard covers the following detector unit configurations:

1. Shelf mounted, powered from 120 VAC, with Relay Output.
   a. One channel
   b. Two channels
2. Shelf mounted, powered from 120 VAC, with electrically isolated solid state output(s).
   a. One channel
   b. Two channels
   c. Four channels
3. Card rack mounted, powered from an external 24-volt DC source, with electrically isolated solid state output(s).
   a. Two channels
   b. Four channels

Each channel shall be provided with independent loop input terminals and shall deliver detection information on independent output terminals.

11.2.2.2 Dimensions

1. Shelf mounted one channel units shall be a maximum of 2.5″ W × 7″ H × 9″ D, including projections, but excluding the mating connector.
2. Shelf mounted two or four channel units shall be a maximum of 3.5″ W × 7″ H × 9″ D, including projections, but excluding the mating connector.
3. Two channel card rack units shall be 1.14″ max. W × 4.5″ H × 7.00″ D, excluding the handle as shown in Figure 11-1.
4. Four channel card rack units shall be 2.31″ max. W × 4.5″ H × 7.00″ D, excluding the handle as shown in Figure 11-2.

NEMA Standard 4-7-1983.

11.2.3 Connectors

On shelf mounted units all inputs and outputs, including power, shall enter the unit through a front panel connector. The connectors of shelf mounted units shall mate with the connectors specified in these standards.

NEMA Standard 4-7-1983.

11.2.4 Accessibility

The detector unit shall be easily disassembled to gain access for maintenance. When thus disassembled, the detector unit shall be operational for trouble shooting.

NEMA Standard 4-7-1983.

11.2.5 Material and Construction of Rigid Printed Circuit Assemblies

11.2.5.1 Materials

All printed circuit boards shall be made from NEMA (FR-4) glass-epoxy, flame retardant, or equivalent (See current edition of NEMA Standards Publication LI 1-1982 *Industrial Laminated Thermosetting Products*). Circuit boards exceeding two inches in any dimension shall be at least 1/16 inch nominal thickness. Circuit boards not exceeding two inches in any dimension shall be at least 1/32 inch nominal thickness.

11.2.5.2 Conductors

The walls of all plated-through holes shall have a minimum copper plating thickness of .001 inch. All circuit tracks shall have a conductivity equivalent to at least one ounce per square foot of copper. All electrical mating surfaces shall be made of noncorroding material.

11.2.5.3 Component Identification

The unit shall be designed so that each component is identified by a circuit reference symbol. This identification shall be affixed to the printed circuit board(s), the cover of the unit, or in an assembly drawing provided with the unit.

NEMA Standard 4-7-1983.

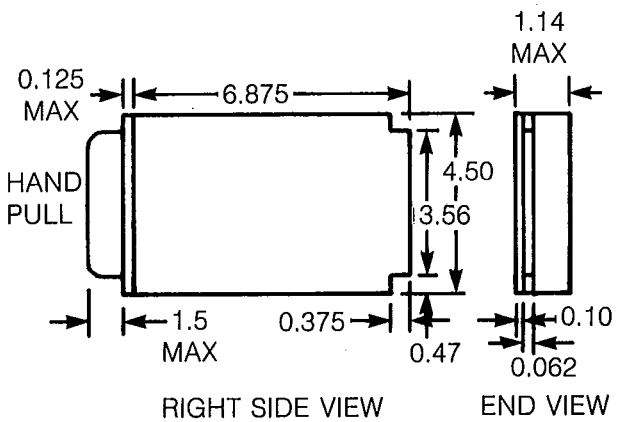

Not to scale
All dimensions in inches
± *0.020 Tolerance (where applicable)*

Figure 11-1
TWO-CHANNEL CARD RACK UNIT

Copyright National Electrical Manufacturers Association
Provided by IHS under license with NEMA
No reproduction or networking permitted without license from IHS
Not for Resale

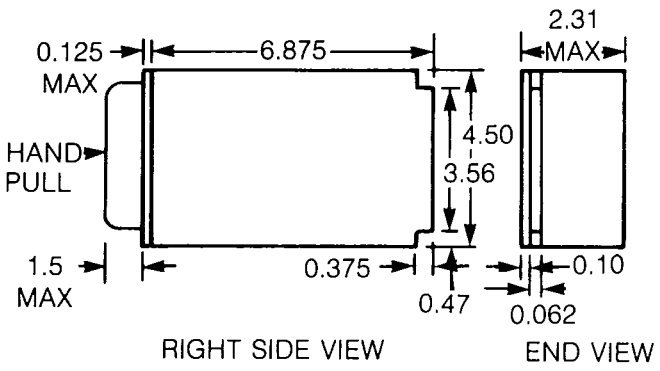

Figure 11-2
TWO-CHANNEL CARD RACK UNIT

Not to Scale
All dimensions in inches
± 0.020 Tolerance (where applicable)

11.2.6 Environmental Requirements

Loop detector units shall operate in accordance with requirements listed herein under the following environmental conditions. (The words "loop detector unit" are substituted for "controller assembly" in the cited paragraphs.)

11.2.6.1 Voltage, AC Powered Units

1. *Voltage Range*
   The voltage range shall be in accordance with 2.1.2.
2. *Frequency Range*
   The frequency range shall be in accordance with 2.1.3.

11.2.6.2 Voltage, DC Powered Units

1. *Voltage Range*
   The voltage range shall be 24 VDC ±2.5 VDC.
2. *Ripple*
   The maximum supply ripple shall be 500 millivolts peak to peak.

11.2.6.3 A.C. Power Interruption

Two or more power interruptions which are separated by power restorations of 1500 milliseconds or more shall be considered as separate interruptions. The loop detector unit shall react to the power interruptions as follows:

1. Three interruptions of 20 milliseconds or less which are separated by power restorations of 300 milliseconds or more shall not cause the loop detector unit to revert to its start-up sequence.
2. The loop detector unit shall be permitted to revert to its start-up sequence following power interruptions longer than 20 milliseconds.

11.2.6.4 Temperature and Humidity

Temperature and humidity shall be in accordance with 2.1.5.

11.2.6.5 Transients, AC Powered Units

Loop detector units using 120 VAC 60 Hz input power shall meet the following requirements:

1. The detector unit shall withstand the high-repetition noise transients as described in 2.1.6.1.
2. The detector unit shall withstand the low-repetition, high-energy transients as described in 2.1.6.2.
3. The detector unit shall withstand the non-destructive transient as described in 2.1.8.

11.2.6.6 Transients, DC Powered Units

Loop detector units using 24 VDC input power shall operate normally when the test impulse described in 2.1.7 is applied as follows:

1. Between LOGIC GROUND and the + 24 VDC power input. The test set-up shown in Figure 11-3 shall be used for this test.
2. Across the output terminals of each channel while in both the detect and non-detect condition.

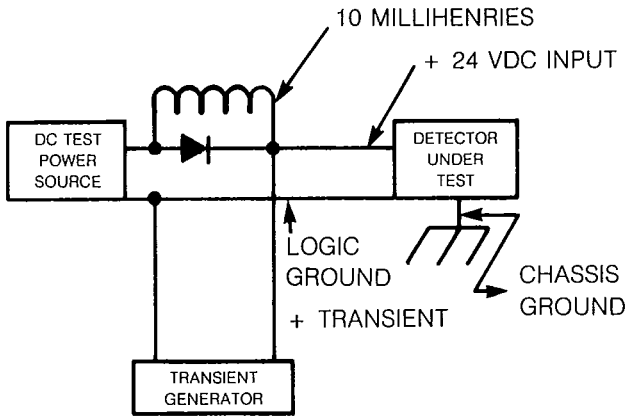

TEST CONDITIONS:

1. Transient generator is described in 2.1.7.
2. The input voltage shall be 24 ± 2.5 volts dc measured at the input terminal to the loop detector under test.
3. The dc power source must be capable of supplying at least 100 milliamperes per channel.
4. When testing for the reverse polarity transient, the diode shown shall be reversed.

Figure 11-3
TEST CONFIGURATION

Copyright National Electrical Manufacturers Association
Provided by IHS under license with NEMA
No reproduction or networking permitted without license from IHS
Not for Resale

3. Between LOGIC GROUND and the control inputs.

Detector loop inputs are specifically excluded from this test.

11.2.6.7 Transients, Loop Detector Input Terminals

The detector shall be capable of withstanding the following non-destructive transient test:

1. The detector loop input terminals, with loop not connected, shall be subjected to the non-destruct transient immunity test described in 2.1.8, except that the amplitude shall be 200 volts ± 5%.

2. Each detector loop input terminal shall be subjected to one transient pulse of each polarity between the loop terminal and chassis ground with the other loop terminal ungrounded and repeated with the other terminal connected to chassis ground as shown in Figure 11-4.

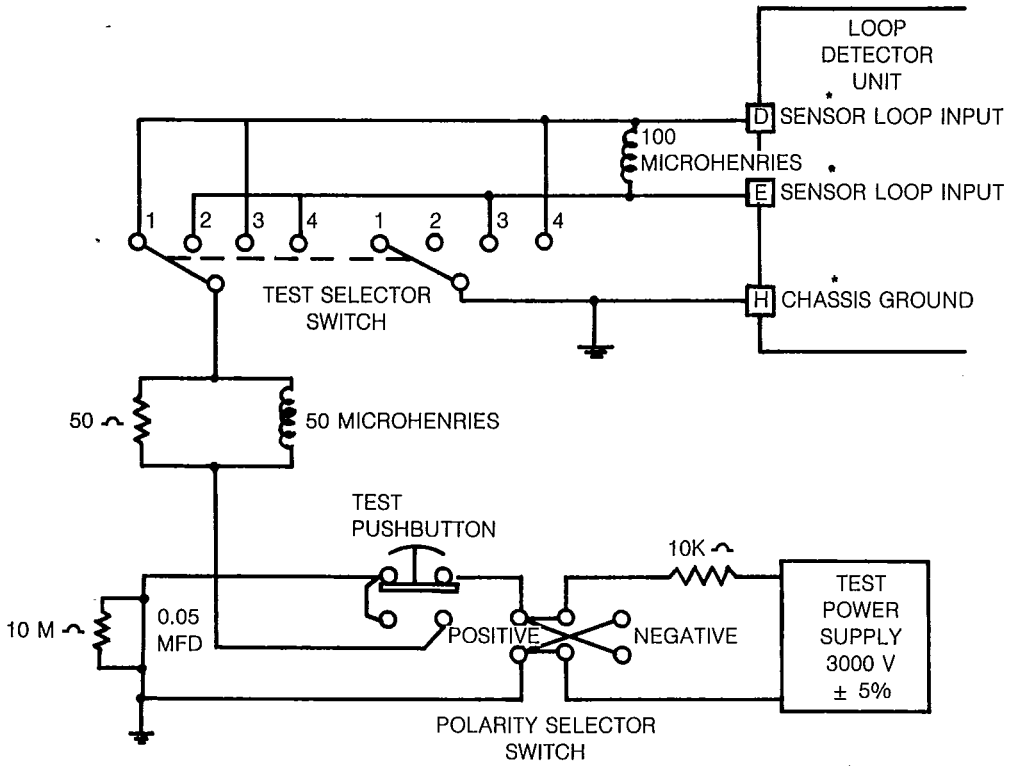

TRANSIENT TEST CONFIGURATIONS

TEST NUMBER	TEST SELECTOR POSITION	POLARITY SELECTOR	TESTED INPUTS*
1	1	POSITIVE	D TO H
2	2	POSITIVE	E TO H
3	3	POSITIVE	D TO E
4	4	POSITIVE	E TO D
5	1	NEGATIVE	D TO H
6	2	NEGATIVE	E TO H
7	3	NEGATIVE	D TO E
8	4	NEGATIVE	E TO D

*The pin designations shown are for a single channel detector. Similar tests shall be performed on all channels of a multichannel detector.

Figure 11-4
LOOP INPUT TERMINAL TRANSIENT TESTS

Copyright National Electrical Manufacturers Association
Provided by IHS under license with NEMA
No reproduction or networking permitted without license from IHS
Not for Resale

The test shall be performed with the detector operating from its normal power source and with a 100 uH ± 10% coil connected across the loop terminals of each channel.

The energy source shall be a capacitor of .05 uP ± 5% connected in accordance with Figure 11-4.

The voltage on the capacitor shall be adjusted to 3000 volts, ± 5%.

The pushbutton shall be activated for at least one second for each of the eight conditions.

11.2.6.8 VIBRATION

The loop detector unit shall maintain both its physical integrity and operating characteristics when subjected to the vibration test in Section 2. This test shall be run at nominal voltage and room environmental conditions.

11.2.6.9 SHOCK

The loop detector unit shall suffer neither permanent mechanical deformation nor any damage which renders it permanently inoperable when subjected to the shock test described in Section 2. This test shall be run at room environmental conditions without power applied to the unit.

NEMA Standard 4-7-1983

11.2.7 Power Inputs

11.2.7.1 AC + (LINE SIDE)

The AC+(line side) is the protected side of the 120 VAC 60 Hz power source. The steady state input current per channel shall not exceed 100 milliamperes rms.

11.2.7.2 AC − (COMMON)

The AC−(common) is the unfused and unswitched return side, neutral of the 120 VAC 60 Hz power source. This input shall not be connected to LOGIC GROUND or CHASSIS GROUND within the unit nor to the loop input terminals.

11.2.7.3 PLUS 24 VDC

This input supplies power for DC units and is the source of power for DC control inputs in AC powered units. The current consumption of DC powered units shall not exceed 100 milliamperes per channel. The +24 VDC current consumption of AC powered units shall not exceed 10 milliamperes per control input. The return for this input in DC powered units is LOGIC GROUND as described in 2.8. The only return for this input in AC powered units is the control input(s) as described in 2.10.1. This input shall not be connected within the unit to any loop input.

NEMA Standard 4-7-1983.

11.2.8 Logic Ground

This input is the return for the +24 VDC input on DC powered units. This point shall not be connected within the unit to AC−(common), or to CHASSIS GROUND, or to any loop input terminal.

NEMA Standard 4-7-1983

11.2.9 Chassis Ground

The loop detector unit shall have a terminal for connection to the chassis of the unit. This input shall not be connected to LOGIC GROUND, AC− (common), or to any other point within the unit, except that it shall be permissible to use this input as a return for transient protection devices.

If the unit has a metallic case, the case shall be connected to CHASSIS GROUND.

NEMA Standard 4-7-1983.

11.2.10 Control Inputs

11.2.10.1 DC CONTROL INPUTS

Control inputs shall have the following characteristics as measured from the negative side of the + 24 VDC input supply:

* The negative side of the +24 VDC input supply will normally be returned to LOGIC GROUND within the controller assembly. When the negative side of the +24 VDC input supply is returned to LOGIC GROUND, LOGIC GROUND is the reference point for the control inputs.

*Authorized Engineering Information 4-7-1983.

11.2.10.1.1

A voltage between 0 and 8 volts shall be considered the "low" or active state.

11.2.10.1.2

A voltage greater than 16 volts shall be considered the "high" or inactive state.

11.2.10.1.3

Transition zone of input circuitry from "low" state to "high" state and vice versa shall occur between 8 and 16 volts.

11.2.10.1.4

External transition from "low" state to "high" state and vice versa shall be accomplished within 0.1 millisecond.

11.2.10.1.5

Over the voltage range 0 to 26 volts DC maximum current "in" or "out" of any input control terminal shall be less than 10 milliamperes. The input circuitry shall be returned to + 24 volt DC supply in such a manner that the removal of all connections to the input shall allow the

Copyright National Electrical Manufacturers Association
Provided by IHS under license with NEMA
No reproduction or networking permitted without license from IHS
Not for Resale

voltage at the input terminal to rise to the + 24 supply voltage.

11.2.10.1.6

Any input signal dwelling in a defined logic state for less than 1.0 millisecond shall not be recognized. Any input signal dwelling in a defined logic state for more than 30 milliseconds shall be recognized. Successive similar logic state transitions shall not be recognized when occurring less than 10 milliseconds apart, and shall be recognized when occurring more than 135 milliseconds apart.

11.2.10.1.7

The application of a "low" state voltage to a DELAY/EXTENSION ENABLE input shall activate the delay/extension feature on the channel.

11.2.10.2 AC Control Inputs

Control inputs shall have the following characteristics as measured from the AC−(common) input of the unit:

11.2.10.2.1

Any voltage from 70 to 135 volts AC shall be considered the "on" or active state.

11.2.10.2.2

Any voltage less than 15 volts AC shall be considered the "off" or inactive state.

11.2.10.2.3

The quiescent input current shall not exceed 50 milliamperes.

11.2.10.2.4

Any input signal dwelling in a defined logic state for less than 8.3 milliseconds shall not be recognized. Any input signal dwelling is a defined logic state for more than 333 milliseconds shall be recognized. Successive similar logic state transitions shall not be recognized when occurring less than 16.6 milliseconds apart, and shall be recognized when occurring more than 1 second apart.

11.2.10.2.5

The application of an "on" state voltage to a DELAY/EXTENSION INHIBIT input shall deactivate the delay/extension feature on that unit.

NEMA Standard 4-7-1983.

11.2.11 Loop/Lead-in Electrical Properties

Each channel of the detector unit shall function in accordance with the specific requirements of this standard and shall in addition operate without significant degradation with any sensor loop/lead-in combination which exhibits the following electrical properties as measured at the detector unit terminals of the lead-in:

1. Inductance at 50 K Hz – 50 to 700 microhenries.
2. Q at 50 K Hz – greater than 5.
3. Resistance to earth ground – greater than 1 megohm.

NEMA Standard 4-7-1983.

11.2.12 Test Loop Configurations

Sensor loop and lead-in combinations used to verify the performance requirements of this standard shall consist of the following combinations of 6 ft. × 6 ft. three turn loops and shielded lead-in cable as illustrated in Figure 11-5.

1. Single-loop 6 ft. by 6 ft., three turns, with 100 ft. of lead-in (80-105 microhenries).
2. Single-loop 6 ft. by 6 ft., three turns, with 1,000 ft. of lead-in (260-320 microhenries).
3. Four loops 6 ft. by 6 ft., three turns, in a row in the direction of travel and separated by 9 feet, series/parallel connected with 250 ft. of lead-in (100-140 microhenries).

11.2.13 Test Vehicle Definition

Detector units shall detect all vehicles which ordinarily traverse the public streets and highways and which are comprised of sufficient conductive material suitably located to permit recognition and response by the detector system.

Vehicles are classified by this standard in accordance with the reduction in inductance resulting when they are centered in the single 6 ft. by 6 ft., three turn-test loop with 100 feet of lead-in described in 11.2.12.

These minimum reductions are as follows:

Class 1—0.13% $\left(\frac{\Delta l}{1}\right)$ or 0.12 microhenries (Δl) inductance change with a single 6 × 6ft three turn loop with 100 ft lead-in (small motorcycle)

Class 2—0.32% $\left(\frac{\Delta l}{1}\right)$ or 0.3 microhenries (Δl) inductance change with a single 6 × 6ft three turn loop with 100 ft lead-in (Large motorcycles)

Class 3—3.2% $\left(\frac{\Delta l}{1}\right)$ or 3.0 microhenries (Δl) inductance change with a single 6 × 6ft three turn loop with 100 ft lead-in (Automobile)

Copyright National Electrical Manufacturers Association
Provided by IHS under license with NEMA
No reproduction or networking permitted without license from IHS

Not for Resale

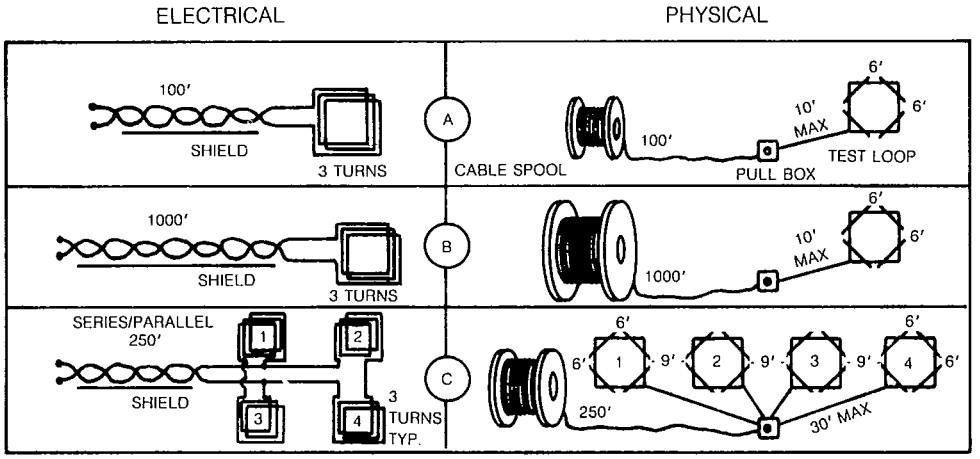

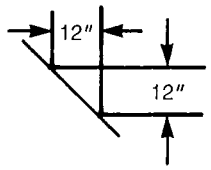

CHAMFER DETAIL

CONSTRUCTION—Loop dimension tolerances shall be ± 2 inches. Connections shall be soldered and waterproofed. Loops shall be installed in a nonreinforced pavement and located at least 3 feet from any conductive material. Lead-in cable shall be spooled. Loop leads shall exit at one corner of the loop structures. All loop corners shall be chamfered 12 inches.

LOOP WIRE—Each loop shall be three turns of AWG #14 cross-linked polyethelene insulated, stranded cooper wire, such as Belden 35614. Loop inductance shall be between 60-80 microhenries.

LEAD-IN-WIRE—The lead-in wire shall be AWG #14 twisted pair, aluminum polyester shield, polyethylene insulation, vinyl jacket, inductance between 20 μH and 24 μH per 100 feet, such as Belden 8720. For standardized test purposes, the shield shall be insulated from ground.

*Field installation practices or detector unit design may require grounding the shield of the loop lead-in cable. Such grounding should be in accordance with the detector manufacturer's recommendation. (This paragraph is approved as Authorized Engineering Information.)

SAWSLOT—The conductors shall be placed at the bottom of a 1-1/2 ± 1/4-inch deep by 1/4-inch wide sawslot. Pavement sawslot shall be filled with a suitable epoxy or equivalent sealant.

Figure 11-5
TEST LOOP CONFIGURATIONS

NEMA Standard 4-7-1983.
*Authorized Engineering Information 4-7-1983.

Copyright National Electrical Manufacturers Association
Provided by IHS under license with NEMA
No reproduction or networking permitted without license from IHS
Not for Resale

The maximum-reduction caused by any test vehicle shall be 5.4% $\left(\frac{\Delta l}{1}\right)$ or 5 microhenries (Δl) inductance change with a single 6 × 6ft three turn loop with 100ft lead-in.

NEMA Standard 4-7-1983.

11.2.14 Sensitivity

The detector unit shall be capable of detecting any of the vehicles defined in 11.2.13 on any of the test loops defined in 11.2.12.

NEMA Standard 4-7-1983.

11.2.15 Sensitivity Control

When detecting test vehicles as described in 11.2.13 and operating on any of the test loop configurations described in 11.2.12, each channel of the detector unit shall include means to adjust the sensitivity such that it shall not produce an output when the nearest point of any test vehicle of 11.2.13 is 36 inches or more outside the loop(s) perimeter. A minimum of three sensitivity selections shall be provided for each detection channel.

NEMA Standard 4-7-1983.

11.2.16 Approach Speed

The detector unit shall detect any vehicle described in paragraph 11.2.13 over any of the single loops described in paragraph 11.2.12 traveling within the speed range of 5 to 80 miles per hour.

The detector unit shall detect any vehicle described in 11.2.13 over all of the loops of the four loop configurations described in 11.2.12 traveling within the speed range of 5 to 20 miles per hour.

All channels of a multichannel detector shall be operating at the same sensitivity and connected to equivalent inductances for the purpose of these tests.

NEMA Standard 4-7-1983.

11.2.17 Modes of Operation

Each detector channel shall be capable of functioning in the following two front panel selectable modes:

11.2.17.1 Presence

When any vehicle described in 11.2.13 occupies the center of any of the test loops described in 11.2.12, the detector unit shall be capable of maintaining a detection output for a minimum of three minutes.

11.2.17.2 Pulse

A detection output between 75 and 150 milliseconds shall be initiated when a vehicle enters the sensor loop zone of detection.

If this vehicle remains in the zone of detection, the detector unit shall become responsive within a maximum of 4 minutes to additional test vehicles entering the zone of detection.

The detector unit shall produce one and only one output pulse for a test vehicle traveling at 10 miles per hour across the zone of detection of the single sensor loops defined in 11.2.11.

NEMA Standard 4-7-1983.

11.2.18 Recovery from Sustained Occupancy

When operating in the presence mode, and following a sustained occupancy of 5 minutes, the detector unit shall recover the normal operation with at least 90% of its selected sensitivity within one second after the zone of detection is vacated.

NEMA Standard 4-7-1983.

11.2.19 Response Time

When operating in the presence mode, the detector unit shall be capable of being set to produce an output in response to a 0.12 microhenry step decrease in inductance (equivalent to the minimum decrease from a Class 1 vehicle defined in 11.2.13) within not more than 125 milliseconds when tested on either of the single loop test configurations described in 11.12. In response to step return to the original inductance, the detector unit shall terminate its output within not more than 125 milliseconds.

When operating in the presence mode, the detector unit shall be capable of being set to produce an output in response to a 3 microhenry step decrease in inductance (equivalent to the minimum decrease from a Class 3 vehicle defined in 11.2.13) within not more than 50 milliseconds when tested on either of the single loop test configurations described in 11.2.12. In response to a step return to the original inductance, the detector unit shall terminate its output within not more than 50 milliseconds.

All channels of a multi-channel detector unit shall be operating at the same sensitivity and connected to equivalent inductances for the purpose of these tests.

NEMA Standard 4-7-1983.

For certain specific surveillance applications involving vehicle speeds in excess of 45 m.p.h., more precise response times might be required.

Authorized Engineering Information 4-7-1983.

11.2.20 Tuning

Each detector channel shall include one of the following means for accommodating the range of sensor loop/lead-in inductance.

Copyright National Electrical Manufacturers Association
Provided by IHS under license with NEMA
No reproduction or networking permitted without license from IHS
Not for Resale

11.2.20.1 MANUAL TUNING

The unit shall be tunable by an operator using one or more tuning controls. All necessary tuning controls shall be located on the front panel of the unit. It shall be possible to complete tuning within 3 minutes after the application of power. The unit shall achieve normal operation within 30 seconds following tuning.

11.2.20.2 SELF-TUNING

The unit shall tune automatically upon the application of power. It shall achieve normal operation within 30 seconds after application of power.

NEMA Standard 4-7-1983.

11.2.21 Self-Tracking

The detector unit shall automatically accommodate those after-tuning changes in the loop/lead-in electrical characteristics as might reasonably be expected to occur in undamaged loops, properly installed in sound pavement and exhibiting the electrical properties outlined in 11.2.11, without producing a false output or change in sensitivity.

NEMA Standard 4-7-1983.

11.2.22 Recovery from Power Interruption

After a power interruption longer than 20 milliseconds, the detector unit shall resume normal operation within 30 seconds after the main supply voltage recovers to a voltage within the specified limits.

NEMA Standard 4-7-1983.

11.2.23 Crosstalk Avoidance

Each detector channel shall include means to prevent that channel from adversely interacting with any other channel. The means to prevent such interaction shall be either inherent, automatic or manual.

NEMA Standard 4-7-1983.

11.2.24 Delay/Extension

Each channel of the unit shall have three modes of operation—delay, extension and normal (i.e. neither delay nor extension). Only channels 1 and 2 of four channel detector units shall include the delay/extension feature.

11.2.24.1 DELAY

When selected, the output is delayed for the time set. If the vehicle departs before the time set, an output does not occur and the timer is reset. This delay timing is controlled by the DELAY/EXTENSION ENABLE input defined in 11.2.10.1 or DELAY/EXTENSION INHIBIT input defined in 11.2.10.2. See Figure 11-6.

The delay time shall be settable in the range from 0 to 30 seconds. The settability shall be within one second in the 0-15 second range and within two seconds in the 16-30 second range. The accuracy shall be ± 1/2 second or ± 5% of the setting whichever is greater. When the DELAY/EXTENSION ENABLE input is inactive, the delay shall be zero (0 to 0.1 seconds). When the DELAY/EXTENSION INHIBIT input is active, the delay shall be zero (0 to 0.1 seconds).

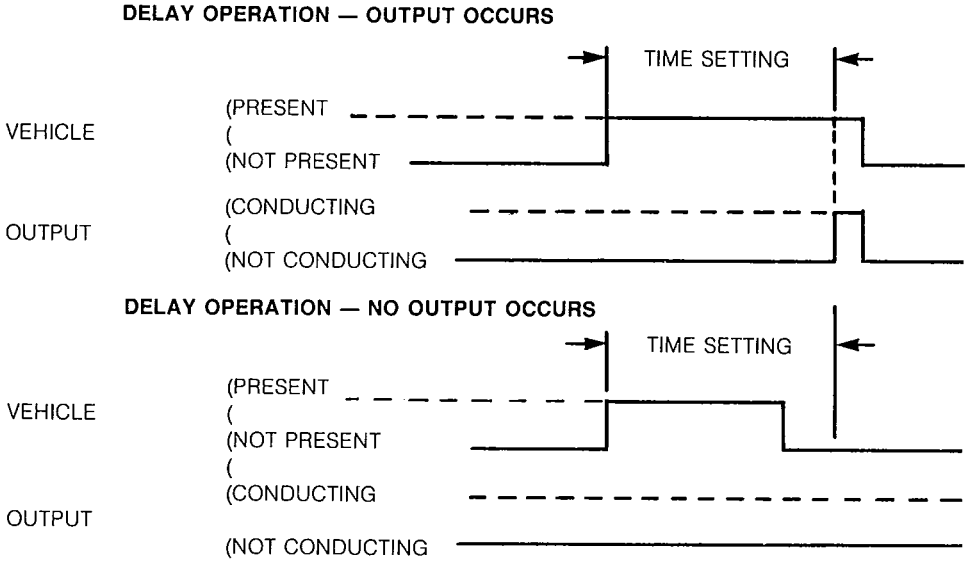

Figure 11-6
DELAY OPERATION

NEMA Standard 4-7-1983.
Authorized Engineering Information 4-7-1983.

Copyright National Electrical Manufacturers Association
Provided by IHS under license with NEMA
No reproduction or networking permitted without license from IHS
Not for Resale

* Care should be taken when installing a detector unit which employs Delay/Extension Inhibit operation in place of a detector unit which does not have this feature as delay operation may be initiated which would cause improper intersection operation unless the delay/extension timing is set to zero.

*Authorized Engineering Information 4-7-1983.

11.2.24.2 EXTENSION

When selected, the output is extended after the vehicle departs the zone of detection for the time set. If a new vehicle arrives before the extension timer times out, the timer is reset, the output is maintained and the timer resumes timing when the vehicle departs. See Figure 11-7. This extension timing is controlled by the DELAY/EXTENSION ENABLE input defined in 11.2.10.1 or DELAY/EXTENSION INHIBIT input defined in 11.2.10.2.

The extension time shall be settable in the range from 0 to 7-1/2 seconds. The settability shall be within 1/2 second. The accuracy shall be ± 1/2 second. When the DELAY/EXTENSION ENABLE input is inactive, the extension shall be zero (0 to 0.1 seconds). When the DELAY/EXTENSION INHIBIT input is active, the extension shall be zero (0 to 0.1 seconds).

NEMA Standard 4-7-1983.

11.2.25 Controls and Indicators

All controls and indicators necessary for the operation of the detector unit shall be located on the front panel of the unit except as noted below. Multiple functions combined in a single control shall be permitted. The controls and indicators shall include, but are not limited to:

1. *Output Indicator*—Means to visually indicate the output state of each channel. Each channel shall have a separate indicator.

2. *Sensitivity Control*—Means to permit selection of the sensitivity of each channel as described in 11.2.15.

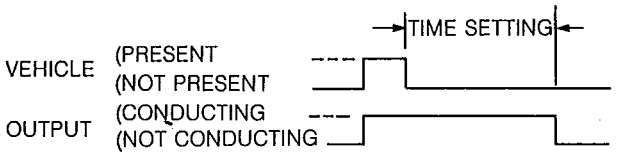

Figure 11-7
EXTENSION OPERATION

3. *Overcurrent Protection Device*—Required for ac powered units. If the overcurrent protection device on an ac powered unit is a fuse or circuit breaker, it shall be accessible from the front panel. Internal mounting of any other overcurrent protection device shall be permitted.

4. *Manual Tuning Control*—When required, permits accommodation of the range of loop/lead-in inductances.

5. *Reset*—A control which unconditionally causes the detector or detection channel to retune to a non-vehicle present condition.

6. *Mode Selector*—Means to permit selection of pulse or presence mode operation of each channel. Card mounting of this control shall be permitted on card rack units.

7. *Crosstalk Control*—As required, provides means to prevent interaction of channels as described in 11.2.23. Card mounting of this control shall be permitted on card rack units.

8. *Delay/Extension Selection Control*—The unit shall have either a control or combination of controls to allow for the selection of one of three operating modes—delay, extension and normal (i.e., neither delay nor extension). It shall be permissible to have the normal mode selected by either setting a three position selector switch to the normal position or setting the delay/extension timing control to zero. Card mounting of the control(s) shall be permitted on card rack units.

9. *Delay/Extension Timing Control*—Means to permit setting of the time duration of the delay/extension period for each channel as described in 11.2.24. When a unit employing Delay/Extension Inhibit operation is used to replace a unit without delay/extension operation (such as a unit conforming to Section 7) the timing controls shall be set to zero. Internal mounting of this control shall be permitted.

NEMA Standard 4-7-1983.

11.2.26 Marking

All units with relay output(s) shall have a permanently attached notification on either the top, front or side surface which reads as follows:

NOTICE: The delay timing on this unit must be set to zero if Pin J is not connected to a 120 VAC timing inhibit signal.

Copyright National Electrical Manufacturers Association
Provided by IHS under license with NEMA
No reproduction or networking permitted without license from IHS
Not for Resale

11.2.27 Output

This standard defines two devices for output interfacing. Detector units shall be configured to have one of the following devices as defined in 11.2.2. The output device shall have the following characteristics:

11.2.27.1 Relay

1. *Contacts Closed*—Indicate detection output.
2. *Power Outage or Overcurrent Failure Condition*—Contacts closed indicate detection output.
3. *Output Circuit Isolation*—The isolation between the output terminals and other terminals shall exceed.
   a. Resistance 10^6 ohms
   b. Breakdown 100 V rms
4. *Contact Rating (resistive load)*
   a. 2 milliamperes through 1 ampere @ 18 to 28 volts.
   b. 0.5 amp @ 120 VAC
   c. Maximum closed contact resistance - 1 ohm.
5. *Mounting*—Plug-in with socket or direct solder mounting.
6. *Minimum Operations*
   10^6 with contacts at rated load
   10^7 total mechanical

11.2.27.2 Solid State (isolated)

1. *Output Solid State Device*—Conducting indicates detection output.
2. *Power Outage or Fuse Failure Condition*—Output device is nonconductive, indicating a no detection output condition.
3. *Output Circuit Isolation*—The isolation between each output device terminal pair and all other terminals shall exceed:
   a. Resistance 10^6 ohms
   b. Breakdown 1000 v rms
4. *Output Rating*—The output shall conduct a minimum of 20 milliamperes with a maximum 1.4 volt drop across the output terminals in the conducting state. The output shall conduct a maximum of 50 microamperes with any voltage between 0 and 26 VDC applied across the output terminals in the non-conductive state.
5. *Transition Time*—When switching to or from a steady state current in the range of 2.4 to 20 ma., the transition time from 8 to 16 volts and vice versa shall be 0.1 milliseconds or less. The circuit(s) to which the output is connected is defined in 13.2.3. (Authorized Engineering Information 4-7-1983).
6. *Maximum Voltage*—Hold off 30 VDC minimum under non-detect conditions.

NEMA Standard 4-7-1983.

11.2.28 Electrical Connections

11.2.28.1 Single-Channel, Shelf-Mounted Detector

1. *Relay Output*

Shall mate with cable connection MS3106A-18-1S. When this unit is used to replace a Section 7 unit of the same keying, the delay/extension timing shall be set to zero. [Failure to set the delay/extension timing to zero when replacing a detector unit without delay/extension operation (such as a unit conforming to Section 7 of this standards publication) may initiate delay operation which will cause improper intersection operation. (Authorized Engineering Information 4-7-1983).] A relay output unit is not interchangeable with a solid-state unit due to rotation of the connector. Input-output connector pin terminations shall be as follows:

A. AC− (common)
B. Relay common
C. AC+ (line side)
D. Loop input
E. Loop input
F. Output normally open (continuity to common during detect)
G. Reserved*
H. Chassis ground
I. No connection
J. Delay/extension inhibit input (AC)

* May be connected to the normally closed output of the relay—for special function use only. During normal operation standard detection functions as defined in this standard will not require a connection to this pin. Detector unit harnesses will not normally contain a wire connected to pin G.

Authorized Engineering Information 4-7-1983.

2. *Solid-State Output (isolated)*

Shall mate with cable connector MS3106A-18-1SW. A relay output unit is not interchangeable with a solid-state unit due to rotation of the connector (Authorized Engineering Information 4-7-1983.) Input-output connector pin terminations shall be as follows:

A. AC− (common)
B. Output (−)
C. AC+ (line side)
D. Loop input
E. Loop input
F. Output (+)
G. Spare
H. Chassis ground
I. +24 VDC supply input
J. Delay/Extension enable input (dc)

Copyright National Electrical Manufacturers Association
Provided by IHS under license with NEMA
No reproduction or networking permitted without license from IHS
Not for Resale

11.2.28.2 Two and Four-channel, Shelf Mounted Detectors

1. *Relay Output, 2-channel*

Shall have two connectors each of which shall mate with cable connector MS3106A-18-1S.

When this unit is used to replace one or two Section 7 units of the same keying, the delay/extension timing shall be set to zero. [Failure to set the delay/extension timing to zero when replacing a detector unit without delay/extension operation (such as a unit conforming to Section 7 of this standards publication) may initiate delay operation which will cause improper intersection operation. A relay output unit is not interchangeable with a solid-state output unit due to the rotation of the connector insert (Authorized Engineering Information 4-7-1983).] Input-output connector pin terminations shall be as follows:

Channel 1, Connector

A. AC− (common)
B. Relay Common, Ch 1
C. AC+ (line side)
D. Loop input, Ch 1
E. Loop input, Ch 1
F. N.O. Output, Ch 1 (continuity to common during detect)
G. Reserved*
H. Chassis Ground
I. No connection
J. Delay/Extension Inhibit Input (AC), Ch 1

Channel 2, Connector

A. No connection
B. Relay Common, Ch 2
C. No connection
D. Loop input, Ch 2
E. Loop input, Ch 2
F. N.O. Output, Ch 2 (continuity to common during detect)
G. Reserved*
H. Chassis Ground
I. No connection
J. Delay/Extension Inhibit Input (AC), Ch 2

2. *Solid-state Output (Isolated) 2-channel*—Shall have two connectors, each of which shall mate with cable connector MS3106A-18-1SW. A relay output unit is not interchangeable with a solid-state output unit due to the rotation of the connector insert. Input-output connector pin terminations shall be as follows:

Channel 1 Connector

A. AC− (common)
B. Output, Ch 1 (−)
C. AC+ (line side)
D. Loop input, Ch 1
E. Loop input, Ch 1
F. Output, Ch 1 (+)
G. Spare
H. Chassis Ground
I. +24 VDC Supply Input
J. Delay/Extension Enable Input (DC), Ch 1

Channel 2 connector

A. No connection
B. Output, Ch 2 (−)
C. No connection
D. Loop Input, Ch 2
E. Loop Input, Ch 2
F. Output, Ch 2 (+)
G. Spare
H. Chassis Ground
I. No connection
J. Delay/Extension Enable Input (DC), Ch 2

3. *Solid-state Output, 2 and 4 Channel "D" Connector*

Shall mate with a 25-pin D subminiature connector, ITT Cannon DBU 25S, or equivalent. The connector retainer shall be a sliding lock type, ITT Cannon DB 51221-1, or equivalent, located on the harness mating connector and oriented such that it locks when the slide is moved in the direction shown in Figure 11-8. Input-output connector pin terminations shall be as follows:

1. AC+ (line side)
2. Reserved
3. Chassis Ground
4. Loop input, Ch 4
5. Loop input, Ch 3
6. Loop input, Ch 2
7. Loop input, Ch 1
8. +24 VDC Supply Input
9. Output Ch 4 (+)*

* May be connected to the normally closed output of the relay—for special function use only. During normal operation, standard detector functions as defined in this standard will not require a connection to this pin. Detector unit harnesses will not normally contain a wire connected to pin G. (Authorized Engineering Information 4-7-1983).

* Two channel units shall have pins 9 and 21 connected within the unit and pins 10 and 22 connected within the unit.

Copyright National Electrical Manufacturers Association
Provided by IHS under license with NEMA
No reproduction or networking permitted without license from IHS
Not for Resale

10. Output Ch 3 (+)*
11. Output Ch 2 (+)
12. Output Ch 1 (+)
13. Delay/Extension Enable Input, (DC), Ch 1
14. Reserved
15. AC− (common)
16. Loop input, Ch 4
17. Loop input, Ch 3
18. Loop input, Ch 2
19. Loop input, Ch 1
20. Spare
21. Output, Ch 4 (−)*
22. Output, Ch 3 (−)*
23. Output, Ch 2 (−)
24. Output, Ch 1 (−)
25. Delay/Extension Enable Input, (DC), Ch 2

* Two channel units shall have pins 9 and 21 connected within the unit and pins 10 and 22 connected within the unit.

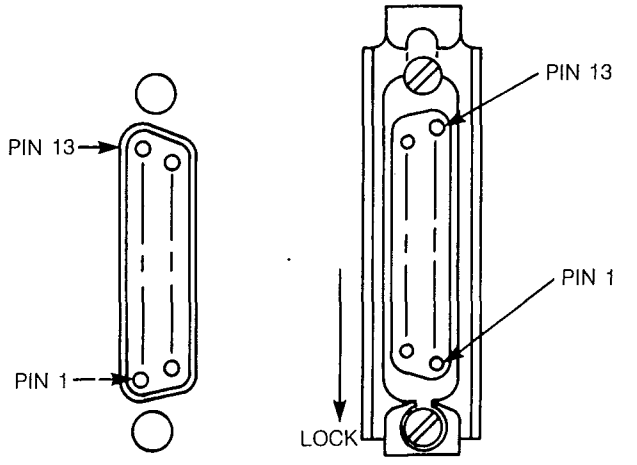

FRONT PANEL CONNECTOR

HARNESS MATING CONNECTOR SHOWN IN UNLOCKED POSITION

Figure 11-8

Copyright National Electrical Manufacturers Association
Provided by IHS under license with NEMA
No reproduction or networking permitted without license from IHS

Not for Resale

Section 13
INTERFACE STANDARDS FOR ADVANCED TWO-PHASE THROUGH EIGHT-PHASE SOLID-STATE TRAFFIC SIGNAL CONTROLLER UNITS

This section defines the interface of 2- through 8-phase solid state traffic signal controller units which fully conform to Sections 3 and 4 of this standards publication and which also have additional advanced input and output functions not available in Sections 3 and 4. Since applications of units built to these standards might use some of these additional features, units built to conform to Sections 3 and 4 might not be capable of being substituted for those built to conform to Sections 13 and 14.

In order to achieve greater utility, Sections 13 and 14 define more construction features and performance functions than Sections 3 and 4. Safety has been a prime consideration in the development of these standards.

Section 13 defines interface requirements for a class of solid-state-actuated controller units with input/output spares for future use.

Authorized Engineering Information 4-7-1983.

13.1 INTERFACE REQUIREMENTS

Input-output terminations are required for the functions referenced in Section 14 of these standards.

If input-output terminations in addition to those covered by these standards are required to allow inclusion of additional functional capabilities, such additional input-output terminations shall be provided on an additional connector. Such additional connector shall *not* be interchangeable with another connector on the face of the controller unit. The provision of these additional functional capabilities shall not modify the operating capabilities of the controller unit covered by these standards when the additional input-output connector is disconnected.

NEMA Standard 1-29-1981.

13.2 ELECTRICAL LIMITS OF INPUT-OUTPUT TERMINATIONS

13.2.1 Logic Levels

All logic signals (except as explicitly defined elsewhere in these standards) shall be low state (nominal 0 volts) for the TRUE (operate) state of all input and output terminations. Input-output terminations, when not activated, shall be internally biased to the FALSE (high, nonoperate state (+24 volts dc).

13.2.2 Transient Immunity

The operation of the controller unit shall not be affected during operation by the application to any input or output terminal of pulses of 10 microseconds duration, 300-volt positive or negative amplitude, and with a maximum repetition rate of 1 pulse per second. For purposes of this requirement, a pulse source having an output impedance of not less than 1000 ohms, nor greater than 10,000 ohms, shall be used.

13.2.3 Inputs

Inputs shall have the following characteristics:

1. A voltage between 0 and 8 volts shall be considered the "low" state.
2. A voltage greater than 16 volts shall be considered the "high" state.
3. The transition from "low" state to "high" state (and vice versa) shall occur between 8 and 16 volts.
4. External transition from "low" state to "high" state (and vice versa) shall be accomplished within 0.1 millisecond.
5. Over the voltage range 0 to 26 volts DC, the maximum current "in" or "out" of any input control terminal shall be less than 10 milliamperes. Input impedance shall not exceed 11K ohms to 24 volts DC, nor shall the surge impedance be less than 100 ohms resistive.
6. Any input signal dwelling in a defined logic state for less than 0.25 milliseconds shall not be recognized. Any input signal dwelling in a defined logic state for more than 30 milliseconds shall be recognized. Successive similar logic state transitions shall not be recognized when occurring less than 10 milliseconds apart, and shall be recognized when occurring more than 135 milliseconds apart.

13.2.4 Outputs

Electrical outputs shall have the following characteristics:

1. *Output Circuits*
   a. The "low" (operate) voltage shall be between 0 and 4 volts.
   b. Current sinking capability in the "low" state (true) shall be at least 200 milliamperes from an inductive load.

Copyright National Electrical Manufacturers Association
Provided by IHS under license with NEMA
No reproduction or networking permitted without license from IHS
Not for Resale

c. With an external impedance of 100K ohms or greater, the transition from 4 to 16 volts (and vice versa) shall be accomplished within 0.1 millisecond.

d. The "high" state impedance shall not exceed 11K ohms to 24 volts DC.

e. Any external steady-state voltage applied to an output terminal shall not exceed + 30 volts DC, nor shall it cause flow of more than 3 milliamperes into the terminal, when the output is in the "high" state.

f. Any valid TRUE output signal shall dwell in this state for at least 50 milliseconds.

2. *Regulated 24 Volts DC for External Use*

a. Positive 24 ± 2 volts DC shall be regulated over an AC line voltage variation from 95 to 135 volts and from no-load to full-load.

b. Current capability shall be 500 milliamperes continuous with less than 0.5 volt peak-to-peak ripple.

NEMA Standard 1-29-1981.

13.3 INPUTS AND NUMBER OF TERMINALS

Traffic controller units shall have input functions and terminals as determined by the number of phases and rings in the controller unit as shown in Table 13-1.

NEMA Standard 1-29-1981.

13.4 OUTPUTS AND NUMBER OF TERMINALS

Traffic controller units shall have output functions and terminals as determined by the number of phases and rings in the controller unit as shown in table 13-2.

NEMA Standard 1-29-1981.

13.5 PIN CONNECTIONS

13.5.1 Connectors Used

The connector on the controller unit shall have a metallic shell. The connector shall be connected to the chassis ground internally. The connectors shall be mounted on the front of the unit in accordance with the following:

1. Connector A shall intermate with a MS3116 ( )-22-55S.
2. Connector B shall intermate with a MS3116 ( )-22-55P.
3. Connector C shall intermate with a MS3116 ( )-24-61P.

Controller Unit	Connector A	Connector B	Connector C
2 Phase	X	. . .	. . .
3 Phase	X	X	. . .
4 Phase	X	X	. . .
5-8 Phase	X	X	X

13.5.2 Totals of Terminations

Connections	Phases 2ϕ	3ϕ	4ϕ	8ϕ
Total Number of Inputs . . .	29	36	41	68
Total Number of Outputs .	22	42	54	93
Reserved for 4ϕ and 8ϕ . .	. . .	17	. . .	. . .
Reserved for 8ϕ	. . .	6	6	. . .
Spares*	3	8	8	9
Reserved**	1	1	1	1
Total Pins Required	55	110	110	171

* These spare terminations are reserved exclusively for future assignment of additional specific input-output functions.

** Reserved to prevent interchangeability with controller units conforming to earlier proposed NEMA pin assignments.

13.5.3 Input-Output Connector Pin Terminations

Input-output connector pin terminations shall be in accordance with Table 13-3.

NEMA Standard 1-29-1981.

Table 13-1
INPUTS AND NUMBER OF TERMINALS

Function	Number of Terminals Per Unit 2ϕ	3ϕ	4ϕ	8ϕ
1. Vehicle Detector (per phase)	2	3	4	8
2. Pedestrian Dectector Calls (per phase)	2	3	4	8
3. AC+ (line side)	1	1	1	1
4. AC− (common)	1	1	1	1
5. Chassis Ground	1	1	1	1
6. Logic Ground	1	1	1	1
7. Force Off (per ring)	1	1	1	2

Copyright National Electrical Manufacturers Association
Provided by IHS under license with NEMA
No reproduction or networking permitted without license from IHS
Not for Resale

Table 13-1

Function	Number of Terminals Per Unit 2ϕ	3ϕ	4ϕ	8ϕ
8. Hold (per phase)	2	3	4	8
9. Phase Omit (per phase)	. . .	3	4	8
10. Stop Timing (per ring)	1	1	1	2
11. Interval Advance (per unit)	1	1	1	1
12. Manual Control Enable (per unit)	1	1	1	1
13. Red Rest (per ring)	1	1	1	2
14. Inhibit Max Termination (per ring)	1	1	1	2
15. Call to Nonactuated Mode (2 per unit)	2	2	2	2
16. External Min. Recall to All Vehicle Phases (per unit)	1	1	1	1
17. Omit Red Clearance (per ring)	1	1	1	2
18. Maximum II Selection (per ring)	1	1	1	2
19. Indicator Lamp Control (per unit)	1	1	1	1
20. Pedestrian Omit (per phase)	2	3	4	8
21. Test Input (2 per unit)	2	2	2	2
22. External Start (per unit)	1	1	1	1
23. Pedestrian Recycle (per ring)	1	1	1	2
24. Walk Rest Modifier (per unit)	1	1	1	1
Total Number of Inputs	29	36	41	68

Table 13-2
OUTPUTS AND NUMBER OF TERMINALS

Function	Number of Terminals Per Unit 2ϕ	3ϕ	4ϕ	8ϕ
1. Load Switch Drivers, Basic Vehicle, (G-Y-R, per phase)	6	9	12	24
2. Load Switch Drivers, Pedestrian, (W-PC-DW, per phase)	6	9	12	24
3. Load Switch Drivers, Overlap, (G-Y-R, 4 overlaps maximum)	—	9	12	12
4. Check (per phase)	2	3	4	8
5. Phase ON Logic (per phase)	2	3	4	8
6. Phase Next Logic (per phase)	—	3	4	8
7. Coded Status Bits (3 per ring)	3	3	3	6
8. Controller Unit Voltage Monitor (per unit)	1	1	1	1
9. Regulated 24 Volts DC for External Use	1	1	1	1
10. Flashing Logic Output	1	1	1	1
Total Number of Outputs	22	42	54	93

Copyright National Electrical Manufacturers Association
Provided by IHS under license with NEMA
No reproduction or networking permitted without license from IHS
Not for Resale

Table 13-3
INPUT-OUTPUT CONNECTOR PIN TERMINATIONS

2- Through 8-Phase		3-Phase		4-Phase		8-Phase		8-Phase	
Connector A -22-55P (55 pin)		Connector B -22-55S (55 pin)		Connector B -22-55S (55 pin)		Connector B -22-55S (55 pin)		Connector C -24-61S (61 pin)	
PIN	Function	PIN	Function	PIN	Function	PIN	Function	PIN	Function
A	RESERVED	A	ϕ1 PHASE NEXT	A	ϕ1 PHASE NEXT	A	ϕ1 PHASE NEXT	A	CODED STATUS BIT A (2)*
B	+ 24 VOLT DC EXTERNAL	B	SPARE 1	B	SPARE 1	B	SPARE 1	B	CODED STATUS BIT B (2)*
C	VOLTAGE MONITOR	C	ϕ2 PHASE NEXT	C	ϕ2 PHASE NEXT	C	ϕ2 PHASE NEXT	C	ϕ8 DONT WALK DRIVER
D	ϕ1 RED DRIVER	D	ϕ3 GREEN DRIVER	D	ϕ3 GREEN DRIVER	D	ϕ3 GREEN DRIVER	D	ϕ8 RED DRIVER
E	ϕ1 DONT WALK DRIVER	E	ϕ3 YELLOW DRIVER	E	ϕ3 YELLOW DRIVER	E	ϕ3 YELLOW DRIVER	E	ϕ7 YELLOW DRIVER
F	ϕ2 RED DRIVER	F	ϕ3 RED DRIVER	F	ϕ3 RED DRIVER	F	ϕ3 RED DRIVER	F	ϕ7 RED DRIVER
G	ϕ2 DONT WALK DRIVER	G	RESERVED 4ϕ 8ϕ	G	ϕ4 RED DRIVER	G	ϕ4 RED DRIVER	G	ϕ6 RED DRIVER
H	ϕ2 PED CLEAR DRIVER	H	RESERVED 4ϕ 8ϕ	H	ϕ4 PED CLEAR DRIVER	H	ϕ4 PED CLEAR DRIVER	H	ϕ5 RED DRIVER
J	ϕ2 WALK DRIVER	J	RESERVED 4ϕ 8ϕ	J	ϕ4 DONT WALK DRIVER	J	ϕ4 DONT WALK DRIVER	J	ϕ5 YELLOW DRIVER
K	ϕ2 VEHICLE CALL DET	K	RESERVED 4ϕ 8ϕ	K	ϕ4 CHECK	K	ϕ4 CHECK	K	ϕ5 PED CLEAR DRIVER
L	ϕ2 PED CALL DET	L	RESERVED 4ϕ 8ϕ	L	ϕ4 VEHICLE CALL DET	L	ϕ4 VEHICLE CALL DET	L	ϕ5 DONT WALK DRIVER
M	ϕ2 HOLD	M	RESERVED 4ϕ 8ϕ	M	ϕ4 PED CALL DET	M	ϕ4 PED CALL DET	M	ϕ5 PHASE NEXT
N	STOP TIMING (1)*	N	ϕ3 VEHICLE CALL DET	N	ϕ3 VEHICLE CALL DET	N	ϕ3 VEHICLE CALL DET	N	ϕ5 PHASE ON
P	INHIBIT MAX TERM (1)*	P	ϕ3 PED CALL DET	P	ϕ3 PED CALL DET	P	ϕ3 PED CALL DET	P	ϕ5 VEHICLE CALL DET
R	EXTERNAL START	R	ϕ3 PHASE OMIT	R	ϕ3 PHASE OMIT	R	ϕ3 PHASE OMIT	R	ϕ5 PED CALL DET
S	INTERVAL ADVANCE	S	ϕ2 PHASE OMIT	S	ϕ2 PHASE OMIT	S	ϕ2 PHASE OMIT	S	ϕ6 VEHICLE CALL DET
T	INDICATOR LAMP CONTROL	T	RESERVED 8ϕ	T	RESERVED 8ϕ	T	ϕ5 PED OMIT	T	ϕ6 PED CALL DET
U	AC− (COMMON)	U	ϕ1 PHASE OMIT	U	ϕ1 PHASE OMIT	U	ϕ1 PHASE OMIT	U	ϕ7 PED CALL DET
V	CHASSIS GROUND	V	RESERVED 8ϕ	V	RESERVED 8ϕ	V	PED RECYCLE (2)*	V	ϕ7 VEHICLE CALL DET
W	LOGIC GROUND	W	SPARE 2	W	SPARE 2	W	SPARE 2	W	ϕ8 PED CALL DET
X	FLASHING LOGIC OUT	X	SPARE 3	X	SPARE 3	X	SPARE 3	X	ϕ8 HOLD
Y	CODED STATUS BIT C (1)*	Y	ϕ3 WALK DRIVER	Y	ϕ3 WALK DRIVER	Y	ϕ3 WALK DRIVER	Y	FORCE-OFF (2)*
Z	ϕ1 YELLOW DRIVER	Z	ϕ3 PED CLEAR DRIVER	Z	ϕ3 PED CLEAR DRIVER	Z	ϕ3 PED CLEAR DRIVER	Z	STOP TIMING (2)*
a	ϕ1 PED CLEAR DRIVER	a	ϕ3 DONT WALK DRIVER	a	ϕ3 DONT WALK DRIVER	a	ϕ3 DONT WALK DRIVER	a	INHIBIT MAX TERM (2)*
b	ϕ2 YELLOW DRIVER	b	RESERVED 4ϕ 8ϕ	b	ϕ4 GREEN DRIVER	b	ϕ4 GREEN DRIVER	b	SPARE 1
c	ϕ2 GREEN DRIVER	c	RESERVED 4ϕ 8ϕ	c	ϕ4 YELLOW DRIVER	c	ϕ4 YELLOW DRIVER	c	CODED STATUS BIT C (2)*
d	ϕ2 CHECK	d	RESERVED 4ϕ 8ϕ	d	ϕ4 WALK DRIVER	d	ϕ4 WALK DRIVER	d	ϕ8 WALK DRIVER
e	ϕ2 PHASE ON	e	RESERVED 4ϕ 8ϕ	e	ϕ4 PHASE ON	e	ϕ4 PHASE ON	e	ϕ8 YELLOW DRIVER
f	ϕ1 VEHICLE CALL DET	f	RESERVED 4ϕ 8ϕ	f	ϕ4 PHASE NEXT	f	ϕ4 PHASE NEXT	f	ϕ7 GREEN DRIVER
g	ϕ1 PED CALL DET	g	RESERVED 4ϕ 8ϕ	g	ϕ4 PHASE OMIT	g	ϕ4 PHASE OMIT	g	ϕ6 GREEN DRIVER
h	ϕ1 HOLD	h	RESERVED 4ϕ 8ϕ	h	ϕ4 HOLD	h	ϕ4 HOLD	h	ϕ6 YELLOW DRIVER
i	FORCE-OFF	i	ϕ3 HOLD	i	ϕ3 HOLD	i	ϕ3 HOLD	i	ϕ5 GREEN DRIVER
j	EXT MIN RECALL ALL ϕ's	j	ϕ3 PED OMIT	j	ϕ3 PED OMIT	j	ϕ3 PED OMIT	j	ϕ5 WALK DRIVER
k	MANUAL CONTROL ENABLE	k	RESERVED 8ϕ	k	RESERVED 8ϕ	k	ϕ6 PED OMIT	k	ϕ5 CHECK
m	CALL TO NON ACT 1	m	RESERVED 8ϕ	m	RESERVED 8ϕ	m	ϕ7 PED OMIT	m	ϕ5 HOLD
n	TEST INPUT A	n	RESERVED 8ϕ	n	RESERVED 8ϕ	n	ϕ8 PED OMIT	n	ϕ5 PHASE OMIT
p	AC+ (CONTROL)	p	OL A YELLOW DRIVER	p	OL A YELLOW DRIVER	p	OL A YELLOW DRIVER	p	ϕ6 HOLD
q	SPARE 1	q	OL A RED DRIVER	q	OL A RED DRIVER	q	OL A RED DRIVER	q	ϕ6 PHASE OMIT
r	CODED STATUS BIT B (1)*	r	ϕ3 CHECK	r	ϕ3 CHECK	r	ϕ3 CHECK	r	ϕ7 PHASE OMIT
s	ϕ1 GREEN DRIVER	s	ϕ3 PHASE ON	s	ϕ3 PHASE ON	s	ϕ3 PHASE ON	s	ϕ8 PHASE OMIT
t	ϕ1 WALK DRIVER	t	ϕ3 PHASE NEXT	t	ϕ3 PHASE NEXT	t	ϕ3 PHASE NEXT	t	ϕ8 VEHICLE CALL DET
u	ϕ1 CHECK	u	RESERVED 4ϕ 8ϕ	u	OL D RED DRIVER	t	OL D RED DRIVER	u	RED REST MODE (2)*
v	ϕ2 PED OMIT	v	SPARE 4	v	SPARE 4	v	SPARE 4	v	OMIT RED CLEAR (2)*
w	OMIT RED CLEAR (1)*	w	RESERVED 4ϕ 8ϕ	w	OL D GREEN DRIVER	w	OL D GREEN DRIVER	w	ϕ8 PED CLEAR DRIVER
x	RED REST MODE (1)*	x	RESERVED 4ϕ 8ϕ	x	ϕ4 PED OMIT	x	ϕ4 PED OMIT	x	ϕ8 GREEN DRIVER
y	SPARE 2	y	SPARE 5	y	SPARE 5	y	SPARE 5	y	ϕ7 DONT WALK DRIVER
z	CALL TO NON ACT II	z	RESERVED 8ϕ	z	RESERVED 8ϕ	z	MAX II SELECTION (2)*	z	ϕ6 DONT WALK DRIVER
AA	TEST INPUT B	AA	OL A GREEN DRIVER	AA	OL A GREEN DRIVER	AA	OL A GREEN DRIVER	AA	ϕ6 PED CLEAR DRIVER
BB	WALK REST MODIFIER	BB	OL B YELLOW DRIVER	BB	OL B YELLOW DRIVER	BB	OL B YELLOW DRIVER	BB	ϕ6 CHECK
CC	CODED STATUS BIT A (1)*	CC	OL B RED DRIVER	CC	OL B RED DRIVER	CC	OL B RED DRIVER	CC	ϕ6 PHASE ON
DD	ϕ1 PHASE ON	DD	OL C RED DRIVER	DD	OL C RED DRIVER	DD	OL C RED DRIVER	DD	ϕ6 PHASE NEXT
EE	ϕ1 PED OMIT	EE	RESERVED 4ϕ 8ϕ	EE	OL D YELLOW DRIVER	EE	OL D YELLOW DRIVER	EE	ϕ7 HOLD
FF	PED RECYCLE (1)*	FF	OL C GREEN DRIVER	FF	OL C GREEN DRIVER	FF	OL C GREEN DRIVER	FF	ϕ8 CHECK
GG	MAX II SELECTION (1)*	GG	OL B GREEN DRIVER	GG	OL B GREEN DRIVER	GG	OL B GREEN DRIVER	GG	ϕ8 PHASE ON
HH	SPARE 3	HH	OL C YELLOW DRIVER	HH	OL C YELLOW DRIVER	HH	OL C YELLOW DRIVER	HH	ϕ8 PHASE NEXT
								JJ	ϕ7 WALK DRIVER
								KK	ϕ7 PED CLEAR DRIVER
								LL	ϕ6 WALK DRIVER
								MM	ϕ7 CHECK
								NN	ϕ7 PHASE ON
								PP	ϕ7 PHASE NEXT

* Numbers in parentheses ( ) refer to Ring Number (1) or (2).

Copyright National Electrical Manufacturers Association
Provided by IHS under license with NEMA
No reproduction or networking permitted without license from IHS

Not for Resale

Section 14
DEFINITIONS AND PHYSICAL AND FUNCTIONAL STANDARDS FOR ADVANCED TWO-PHASE THROUGH EIGHT-PHASE SOLID-STATE TRAFFIC SIGNAL CONTROLLER UNITS OF THE VEHICLE-ACTUATED TYPE

This section provides definitions and physical and functional standards for 2- through 8-phase solid-state traffic signal controller units which fully conform to Sections 3 and 4 of this Standards Publication and which also have additional advanced input and output functions not available in Sections 3 and 4. Since applications of units built to these standards might use some of these additional features, units built to conform to Sections 3 and 4 might not be capable of being substituted for those built to conform to Sections 13 and 14.

In order to achieve greater utility, these standards define more construction features and performance functions than Sections 3 and 4. Safety has been a prime consideration in the development of these standards.

Section 14 covers 2- through 8-phase controller units capable of providing all the phase, ring, and unit functions, as defined in these standards and determined by the controller unit phase capacity. It is separated into the following three clauses:

14.1 Definitions
14.2 Physical Standards
14.3 Functional Standards.

Authorized Engineering Information 1-29-1981.

14.1 DEFINITIONS

14.1.1 Ring

A ring consists of two or more sequentially timed and individually selected conflicting phases so arranged as to occur in an established order.

NEMA Standard 1-29-1981.

14.1.2 Barrier (Compatibility Line)

A barrier (compatibility line) is a reference point in the preferred sequence of a dual-ring controller unit at which both rings are interlocked.

Two reference points or barriers assure there will be no concurrent selection and timing of conflicting phases for traffic movement in different rings as illustrated by Fig.14-1. Both rings cross the barrier simultaneously to select and time phases on the other side.

NEMA Standard 1-29-1981.

14.1.3 Controller Unit

A controller unit is that portion of a controller assembly that is devoted to the selection and timing of signal displays.

14.1.3.1 Dual-ring Controller Unit

A dual-ring controller unit contains two interlocked rings which are arranged to time in a preferred sequence and to allow concurrent timing of both rings, subject to the restraint in 14.1.2. The phases within the two timing rings shall be numbered as illustrated by Fig. 14-1.

NEMA Standard 1-29-1981.

14.1.3.2 Single-ring Controller Unit

A single-ring controller unit contains two or more sequentially timed and individually selected conflicting phases so arranged as to occur in an established order. The phases within a ring shall be numbered as illustrated by Fig. 14-2.

14.1.4 Entry

14.1.4.1 Dual Entry

Dual entry is a mode of operation (in a dual-ring controller unit) in which one phase in each ring must be in service. If a call does not exist in a ring when it crosses the barrier, a phase is selected in that ring to be activated by the controller unit in a predetermined manner.

NEMA Standard 1-29-1981.

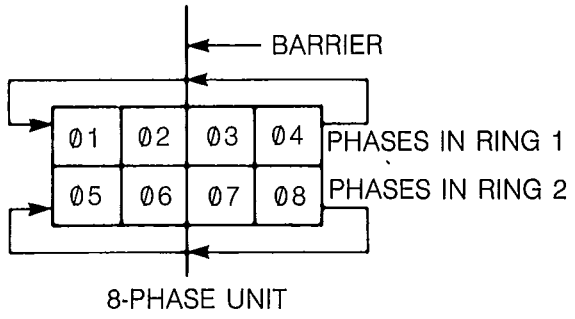

Figure 14-1

Copyright National Electrical Manufacturers Association
Provided by IHS under license with NEMA
No reproduction or networking permitted without license from IHS
Not for Resale

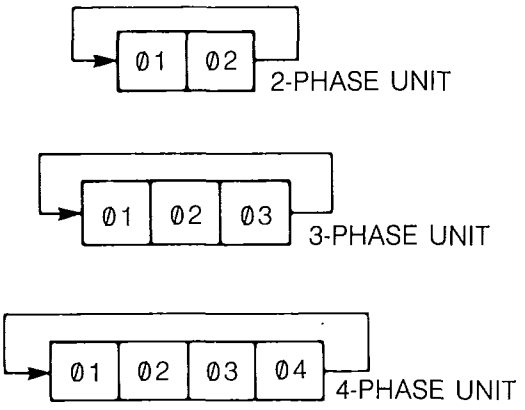

Figure 14-2

Example: Refer to Fig. 14-1. In the absence of calls on phases 7 and 8, with phase 2 and phase 6 terminating to service a call on phase 3, preprogramming determines controller selection and timing of phase 7 or phase 8 concurrent with phase 3.

Authorized Engineering Information 1-29-1981.

14.1.4.2 Single Entry

Single entry is a mode of operation (in a dual-ring controller unit) in which a phase in one ring can be selected and timed alone if there is no demand for service in a nonconflicting phase on the parallel ring.

NEMA Standard 1-29-1981.

Example: Refer to Fig. 14-1. After the termination of phase 2 and phase 6, the controller unit will service a call on phase 3 in the absence of calls on both phase 7 and phase 8. While phase 3 is selected and timed alone, phases 7 and 8 in ring 2 will display RED.

Authorized Engineering Information 1-29-1981.

14.1.5 Pedestrian Recycle

Pedestrian recycle is any start of pedestrian service after the start of the associated phase GREEN.

NEMA Standard 1-29-1981.

14.1.6 Phase (Vehicular)

A vehicular phase is a phase which is allocated to vehicular traffic movement as timed by the controller unit.

14.1.6.1 Conflicting Phases

Conflicting phases are two or more traffic phases which will cause interfering traffic movements if they are operated concurrently.

14.1.6.2 Nonconflicting Phases

Nonconflicting phases are two or more traffic phases which will not cause interfering traffic movements if they are operated concurrently.

NEMA Standard 1-29-1981.

14.1.7 Preferred Sequence

Preferred sequence is the normal order of phase selection within a ring with calls on all phases. See Fig. 14-3.

NEMA Standard 1-29-1981.

14.1.8 Timing, Concurrent

Concurrent timing is a mode of controller unit operation in which a traffic phase can be selected and timed simultaneously with and independently of another traffic phase.

NEMA Standard 1-29-1981.

14.2 PHYSICAL STANDARDS

14.2.1 Dimensions

The controller unit shall be capable of being shelf-mounted. The controller unit shall also be capable of being mounted in an EIA 19-inch rack (multiples of 1- ¾ inch mounting centers). The height of the controller unit shall not exceed 24½ inches. The depth of the unit, including connectors, harnesses, and protrusions, shall not exceed 14½ inches. On rack-mounted units, the mounting flanges of the control unit shall be so placed that no protrusion shall exceed 11 inches to the rear and 3-½ inches to the front.

NEMA Standard 1-29-1981.

14.2.2 Design

The controller unit shall be of modular design. Circuit boards shall be readily accessible for maintenance. It shall be permissible to accomplish this by the use of extender boards.

NEMA Standard 1-29-1981.

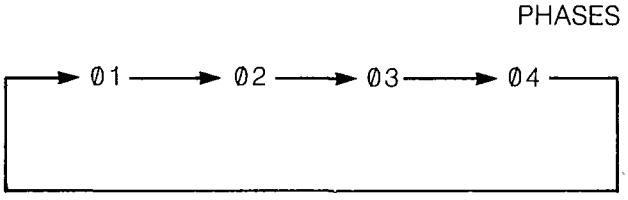

Figure 14-3

Copyright National Electrical Manufacturers Association
Provided by IHS under license with NEMA
No reproduction or networking permitted without license from IHS
Not for Resale

14.2.3 Material and Construction of Rigid Printed Circuit Assemblies

14.2.3.1 MATERIALS

All printed circuit boards shall be made from NEMA FR-4 glass-epoxy, or equivalent (see No. LI 1-1982, *Industrial Laminated Thermosetting Products*). Circuit boards exceeding 2 inches in any dimension shall have a nominal thickness of at least 1/16 inch. circuit boards not exceeding 2 inches in any dimension shall have a nominal thickness of at least 1/32 inch.

14.2.3.2 CONDUCTORS

The walls of all plated-through holes shall have a minimum copper plating thickness of 0.001 inch. All circuit tracks shall have a conductivity equivalent to at least 2 ounces per square foot of copper. All electrical mating surfaces shall be made of noncorrosive material.

14.2.3.3 COMPONENT IDENTIFICATION

The unit shall be so designed that each component is identified with a circuit reference symbol. The identification shall be affixed to the printed circuit board(s) or the cover of the unit, or shall appear in an assembly drawing provided with the unit.

NEMA Standard 1-29-1981.

14.2.4 Interface Connectors

The connectors on the controller unit shall have a metallic shell. The connector shell shall be connected to the CHASSIS GROUND internally. The connectors shall be mounted on the front of the unit. (See Section 13.)

NEMA Standard 1-29-1981.

14.3 FUNCTIONAL STANDARDS

14.3.1 General

Controller unit frames capable of accepting up to four phases shall contain one timing ring. Controller unit frames capable of accepting eight phases shall contain two timing rings with no more than four phases per ring. Dual ring controller units shall be capable of single-entry operation with dual-entry operation obtainable by external logic. Input, outputs, and programming controls are separated into the following three categories:

1. Per phase (14.3.2)
2. Per ring (14.3.3)
3. Per unit (14.3.4)

The priority of input function (14.3.5), the use of indicators on the controller unit (14.3.6), and the method of determining overlaps (14.3.7) are also established.

NEMA Standard 4-7-1983.

14.3.2 Per Phase

The controller unit shall be capable of providing the following features on a per-phase basis:

14.3.2.1 TIME SETTINGS

The following functions, with the associated minimum timing ranges and maximum increments, shall be provided as a minimum when required by the application. For timing accuracy see 2.1.11.

Function	Range, Seconds	Increments, Seconds
Min Green (initial)	1-30	1
Passage Time (preset gap)	0-9*	0.25
Maximum 1	1-99	1
Maximum 2	1-99	1
Yellow Change	0-7*	0.25
Red Clearance	0-7	0.25
Walk	1-30	1
PED Clearance	0-30*	1
Added Initial	0-3 per Actuation	0.125
Time to Reduce	1-60	1
Time Before Reduction ...	1-60	1
Minimum Gap	0-7.75*	0.125

* Zero shall be satisfied by any time between zero and 100 milliseconds.

14.3.2.2 PHASE INTERVALS

1. *GREEN Interval—Actuated Phase*

a. *Without Volume Density*—The GREEN interval is a variable interval dependent upon vehicle actuations. The GREEN interval time shall be limited by the MAX GREEN time function which shall commence timing upon registration of a serviceable conflicting call. The MINIMUM GREEN time shall not be preempted by a MAXIMUM GREEN termination.

Three time settings shall be provided for determination of GREEN timing on an actuated phase without volume density.

(1) MINIMUM GREEN—The first timed portion of the GREEN interval which is set in consideration of the storage of vehicles waiting between the sensing zone of the approach vehicle detector and the stop line.

(2) PASSAGE TIME (Vehicle Interval, Preset Gap)—The extensible portion of the green shall be a function of vehicle actuations that occur during the GREEN interval. The phase shall remain in the extensible portion of the GREEN interval as long as the passage timer is not timed out.

Copyright National Electrical Manufacturers Association
Provided by IHS under license with NEMA
No reproduction or networking permitted without license from IHS
Not for Resale

The timing of this portion of the GREEN interval shall be reset with each subsequent vehicle actuation and shall not commence to time again until the vehicle actuation is removed from the controller unit. The duration of the GREEN interval shall be subject to the limit of the MAXIMUM GREEN.

(3) MAXIMUM GREEN—This time setting shall determine the maximum length of time this phase may be held GREEN in the presence of an opposing serviceable call. In the absence of a serviceable conflicting call the MAXIMUM GREEN timer shall be held reset.

b. *With Volume Density*—In addition to MINIMUM GREEN, PASSAGE TIME, and MAXIMUM GREEN timing functions, phases provided with VOLUME DENSITY operation shall include VARIABLE INITIAL timings and GAP REDUCTION timings. The effect on the INITIAL timing shall be to increase the timing in a manner dependent upon the number of vehicle actuations stored on this phase while its signal is displaying YELLOW or RED. The effect on the extensible portion shall be to reduce the allowable gap between successive vehicle actuations by decreasing the extension time in a manner dependent upon the time waiting of vehicles on an opposing RED phase.

(1) VARIABLE INITIAL (See Fig. 14-4). The VARIABLE INITIAL timing period shall be determined by an interrelationship of two time settings as described below:

(a) MINIMUM GREEN setting shall determine the minimum VARIABLE INITIAL time period.

(b) SECONDS/ACTUATION setting shall determine the time by which the VARIABLE INITIAL time period will be increased from zero with each vehicle actuation received during the associated phase YELLOW and RED intervals.

(c) The maximum of the VARIABLE INITIAL timing period shall be fixed at 30 seconds, or shall be settable (on a per-phase basis) in the range of 0-60 seconds with increments of 1 second. The maximum VARIABLE INITIAL setting shall be subordinate to MINIMUM GREEN time setting.

(d) Initial timing shall equal (seconds/actuation) multiplied by (number of actuations) within the constraint of MAXIMUM INITIAL and shall be not less than MINIMUM GREEN.

(2) GAP REDUCTION (See Fig. 14-5)—The GAP REDUCTION function shall be accomplished by means of the following functional settings:

(a) TIME BEFORE REDUCTION
(b) PASSAGE TIME
(c) MINIMUM GAP
(d) TIME TO REDUCE

The TIME BEFORE REDUCTION period shall begin when the phase is GREEN and there is a serviceable conflicting call. If the serviceable conflicting call is withdrawn while timing this period, the timer shall be reset and remain reset until the next serviceable conflicting call is received.

Upon completion of the TIME BEFORE REDUCTION period, the linear reduction of the allowable gap from the PASSAGE TIME level shall begin.

The rate of reduction shall be based on the setting of the PASSAGE TIME, MINIMUM GAP, and TIME TO REDUCE controls. This method shall reduce the allowable gap at a rate equal to the difference between the PASSAGE TIME and MINIMUM GAP settings divided by the setting of the TIME TO REDUCE control.

The reduction of the allowable gap shall continue until the gap reaches a value equal to or less than the minimum gap as set on the MINIMUM GAP control after which the allowable gap shall remain fixed at the values set on the MINIMUM GAP control. In the presence of a continuous vehicle actuation, the phase shall not gap out even if the gap is reduced to zero (i.e., MINIMUM GAP set at zero).

If at any time the serviceable conflicting call is withdrawn, the gap shall revert to the PASSAGE TIME setting value, and the TIME BEFORE REDUCTION period timer shall be reset and remain reset until the next serviceable conflicting call is received.

2. *Pedestrian Timing, Concurrent*

Concurrent pedestrian timing shall be permitted in association with any mode of vehicle signal timing. Two time settings shall be required:

a. *Walk*—This shall control the amount of time the WALK indication shall be displayed.

b. *Pedestrian Clearance*—This shall control the duration of the PEDESTRIAN CLEARANCE output and the flashing period of the DON'T WALK output.

When a pedestrian call is stored in pedestrian memory and pedestrian indications are concurrent with an associated vehicle phase, the pedestrian sequence shall commence service when entering the vehicle GREEN of that phase unless the PEDESTRIAN OMIT line is activated.

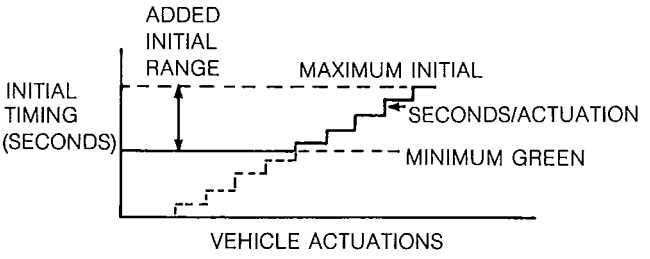

Figure 14-4

Copyright National Electrical Manufacturers Association
Provided by IHS under license with NEMA
No reproduction or networking permitted without license from IHS
Not for Resale

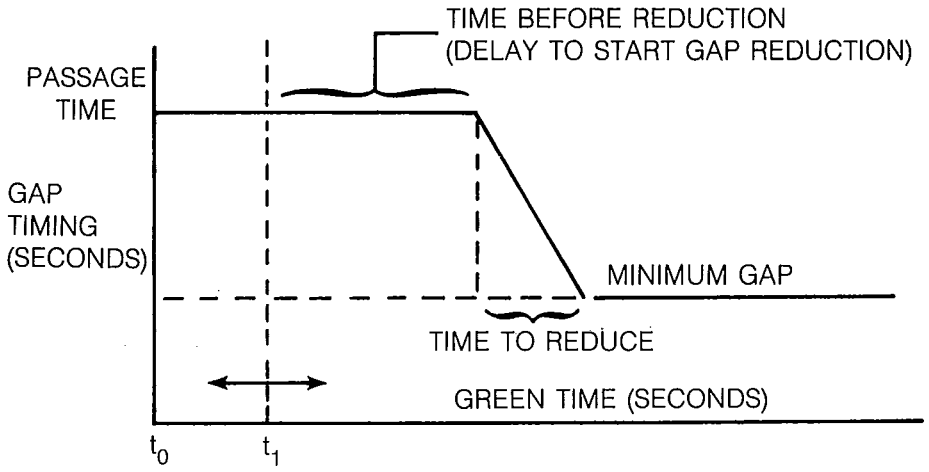

(a) t_0 = Start of phase GREEN.
(b) t_i = Registration of serviceable conflicting call.
(c) TIME BEFORE REDUCTION shall not start timing before t_0.
(d) MAXIMUM timer start shall be conditional upon being in the GREEN interval and registration of a serviceable conflicting call—vehicle or pedestrian.
(e) PASSAGE TIME portion of GREEN interval *must* time concurrently with INITIAL subject to vehicle actuations.

Figure 14-5

During the indication of the WALK and PEDESTRIAN CLEARANCE intervals, a concurrent GREEN vehicle indication shall be shown. It shall be possible to recycle the pedestrian indications in response to succeeding pedestrian calls for service—subject to absence of serviceable conflicting calls (vehicle or pedestrian) and nonactivation of the PEDESTRIAN OMIT line.

3. *Actuated Phase Operating in The Nonactuated Mode*

The actuated phases that are converted to NONACTUATED operation by activation of either of the CALL TO NONACTUATED MODE inputs shall have a permanent demand placed for vehicle and pedestrian service. Each such phase shall be equipped with pedestrian timing capability.

These phases shall be considered to have the four green states indicated in Fig. 14-6.

a. State A shall be the minimum timing state. The duration of State A shall be equal to the WALK time setting. Signal indications for State A shall be GREEN and WALK.

b. State B shall be a state immediately following the minimum timing state. The controller unit shall dwell in this state in the presence of a HOLD signal or when the WALK REST MODIFIER is active and no serviceable conflicting call exists. The signal indications shall remain in GREEN and WALK. The controller unit shall leave this state when the HOLD input is not active; or when the HOLD input is active, a serviceable conflicting call exists, and the FORCE-OFF input is activated. If the phase HOLD is active and the FORCE-OFF is activated when the phase is active and a serviceable conflicting call does not exist, the controller unit shall continue to dwell in State B of the phase.

STATE A — CODE 0* WALK
STATE B — CODE 1* WALK HOLD
STATE C — CODE 2* PEDESTRIAN CLEARANCE
STATE D — CODE 3* GREEN REST

Figure 14-6

*Coded Status Bits Code (Reference 14.3.2.2.2)

Copyright National Electrical Manufacturers Association
Provided by IHS under license with NEMA
No reproduction or networking permitted without license from IHS
Not for Resale

c. State C shall be the PEDESTRIAN CLEARANCE state. During State C, the phase shall activate its PEDESTRIAN CLEARANCE output and flash its DON'T WALK output. The duration of the state shall be equal to the PEDESTRIAN CLEARANCE setting. The phase shall time the clearance and, upon completion of the timing, advance to State D.

d. State D shall be a GREEN DWELL/SELECT state from which the controller unit may select the next phase(s) to be serviced. During State D signal indications shall be GREEN and steady DON'T WALK. When a serviceable conflicting call does not exist and the PEDESTRIAN RECYCLE input is active, or when a serviceable conflicting call does not exist and the WALK REST MODIFIER is active, the phase shall return to State A and retime the WALK interval. If the PEDESTRIAN RECYCLE input is not active and the WALK REST MODIFIER is not active, the pedestrian movement shall not recycle.

In the presence of external signals which may be used for coordination, the sequence of these states shall be as follows.

The GREEN interval begins with the existence of State A. Upon the completion of this state the controller unit exits to State B. If the HOLD input is active at this point, the controller unit shall remain in this state. If FORCE-OFF is applied and if a serviceable conflicting call exists, the controller unit shall advance to State C; otherwise State B exists as long as HOLD remains active. IF HOLD is released while the controller unit is in State B, the controller unit shall advance to State C without regard to the presence of a serviceable conflicting call. If the controller unit advances to State C, it shall advance to State D even in the presence of HOLD. When in State D, the controller unit shall terminate the phase if a serviceable conflicting call exists. If no serviceable conflicting call exists, the controller unit returns to State A of this interval if PEDESTRIAN RECYCLE is active. If PEDESTRIAN RECYCLE is not active and no serviceable conflicting call exists, the controller unit rests in State D. The HOLD function has no effect on the duration of State D.

The duration of the GREEN interval shall not be less than the setting of the MINIMUM GREEN control. In those instances where the sum of the WALK setting, the HOLD state duration, and the PEDESTRIAN CLEARANCE setting is less than the setting on the MINIMUM GREEN control, the controller unit shall remain in State C until the phase has displayed a GREEN indication for a time equal to the MINIMUM GREEN time setting, and shall display a steady DON'T WALK. Refer to Fig. 14-7.

4. *Termination of Green Timing*—GREEN timing termination shall occur in response to one of the following conditions:

a. INTERVAL ADVANCE when timing the last portion of the GREEN interval, as described in 14.3.4.2(4).

b. INTERVAL ADVANCE with MANUAL CONTROL ENABLE activated as described in 14.3.4.2(5).

c. Initial including variable portion completed, the pedestrian service completed, a serviceable conflicting call, and one of the following:

(1) PASSAGE TIME timed out without HOLD applied.

(2) Reduced gap timed out without HOLD applied.

(3) MAXIMUM GREEN termination without HOLD applied.

(4) FORCE-OFF applied.

d. Initial including the variable portion completed, the pedestrian service completed, RED REST activated and PASSAGE TIME timed out without HOLD applied.

5. *Vehicle Change and Clearance Intervals*

a. Following the GREEN interval of each phase the controller unit shall provide a YELLOW CHANGE interval which is timed according to the YELLOW CHANGE timing control for that phase.

b. Following the YELLOW CHANGE interval for each phase, the controller unit shall provide a RED CLEARANCE interval which is timed according to the RED CLEARANCE timing control for that phase. During this RED CLEARANCE interval, no GREEN indication shall be shown to any conflicting phase. This RED CLEARANCE interval is subject to omission in response to operation of the per ring OMIT RED CLEARANCE input.

6. *Pedestrian Timing, Exclusive*—Exclusive pedestrian service shall be permitted. When servicing a pedestrian movement exclusively, no other phase shall be active. It shall not be required in a dual ring controller unit to provide more than two phases in the second timing ring when EXCLUSIVE PEDESTRIAN timing is employed in the other timing ring, neither of which can be employed on the same side of the barrier with the EXCLUSIVE PEDESTRIAN phase.

It shall not be required in a four-phase sequential controller unit to provide more than three phases in addition to the EXCLUSIVE PEDESTRIAN phase.

Two time settings shall be required on the phase, WALK and PEDESTRIAN CLEARANCE, as described in 14.3.2.2(3).

When a pedestrian call is stored in pedestrian memory, the exclusive pedestrian phase shall be serviced with appropriate consideration of its order in the priority of phase sequencing.

The exclusive pedestrian phase shall rest with a steady DON'T WALK indication displayed. It shall be possible

Copyright National Electrical Manufacturers Association
Provided by IHS under license with NEMA
No reproduction or networking permitted without license from IHS
Not for Resale

to recycle the pedestrian indications in response to succeeding pedestrian calls for service, subject to absence of serviceable conflicting calls (vehicle or pedestrian) and nonactivation of the PEDESTRIAN OMIT line.

14.3.2.3 Phase Selection Points

The phase next to be serviced shall be determined at the end of the GREEN interval of the terminating phase; except that if the decision cannot be made at the end of the GREEN interval, it shall not be made until after the end of all vehicle change and clearance intervals.

14.3.2.4 Provision for Storing a Demand

There shall be a provision for storing a call for vehicle service on each vehicle phase when that phase is not displaying a GREEN indication. The vehicle memory feature shall be capable of being disabled from the front of the controller unit. There shall be a provision for storing a call for pedestrian service on phases equipped with pedestrian time settings, when that phase is not displaying a WALK indication.

14.3.2.5 Placement of Maximum Recall

Means shall be provided to place a call on a phase from the front panel such that the GREEN timing of that phase shall be extended to MAXIMUM.

When such a call is placed, the maximum timing shall commence to time as if there were always a serviceable conflicting call, but the phase shall not terminate unless there is an actual serviceable conflicting call.

14.3.2.6 Placement of Minimum Recall

Means shall be provided on the front panel to place a recurring demand for vehicle service on the phase when that phase is not in its GREEN interval.

14.3.2.7 Placement of Pedestrian Recall

Means shall be provided to place a recurring pedestrian demand from the front panel which shall function in the same manner as an external pedestrian call except that it shall not recycle the pedestrian service until an opposing phase is serviced.

14.3.2.8 Placement of Call at Phase Termination

When a phase is terminated with time remaining in the PASSAGE TIME, a call shall be left on that phase. Disabling the vehicle call memory shall defeat this feature. If a phase is terminated with no passage time remaining, no call shall be left on the phase.

14.3.2.9 Inputs

1. *Vehicle Detector Call*—Provision to enter a vehicle demand for service into the appropriate phase of the controller unit.

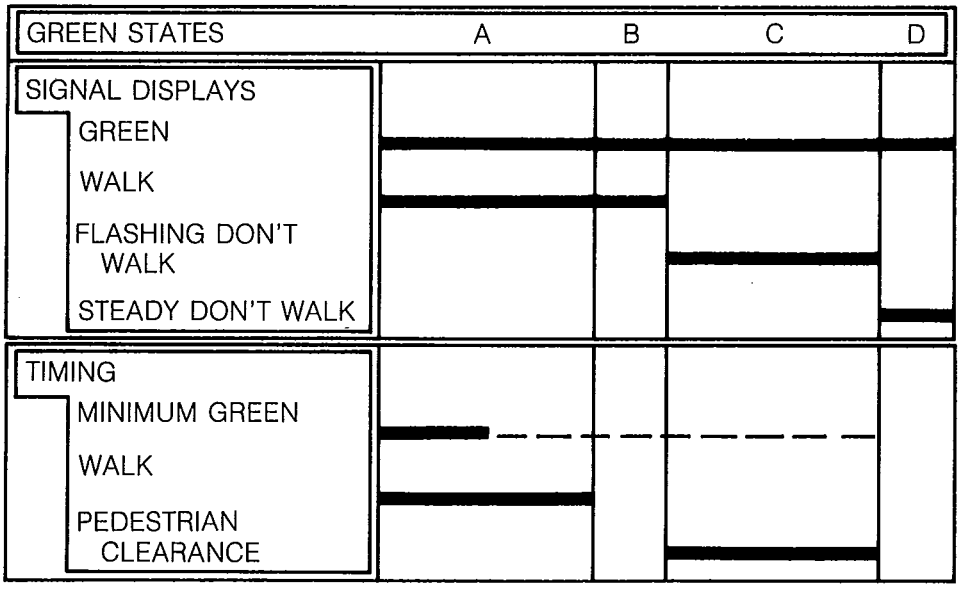

Figure 14-7
ACTUATED PHASE OPERATING IN THE NONACTUATED MODE

*MINIMUM GREEN time out during State A, B, or C. State D shall not be entered until MINIMUM GREEN is timed out.

Copyright National Electrical Manufacturers Association
Provided by IHS under license with NEMA
No reproduction or networking permitted without license from IHS
Not for Resale

2. *Pedestrian Detector Call*—Provision to enter a pedestrian demand for service into the associated phase of the controller unit.

3. *Hold*—Command that retains the existing right-of-way and has different controller unit responses depending upon operation in the vehicle-actuated or nonactuated mode. The operation is as follows:

a. For a nonactuated phase, energization of the HOLD input shall maintain the controller unit in the timed-out WALK period with a GREEN and WALK indication displayed. Energization of the HOLD input while timing the WALK portion of the GREEN interval shall not inhibit the timing of this period. De-energization of the HOLD input and with the WALK interval timed out shall cause the controller unit to advance into the PEDESTRIAN CLEARANCE interval. (See 14.3.2.2(3)). Re-application of the HOLD input while timing the PEDESTRIAN CLEARANCE portion of the GREEN interval shall neither inhibit the timing of this period nor termination of the phase.

b. For an actuated phase, energization and de-energization of the HOLD input shall be as follows.

Energization of the HOLD input shall allow the controller unit to time normally but shall inhibit its advance into the vehicle change interval. Energization of the HOLD input shall inhibit the recycle of the pedestrian service unless the PEDESTRIAN RECYCLE input is active and a serviceable pedestrian call exists on the phase. The rest state signal indications for that phase shall be GREEN for traffic and DON'T WALK for pedestrians.

De-energization of HOLD input shall allow the controller unit to advance into the GREEN DWELL/SELECT state when all GREEN periods are timed out.

De-energization of HOLD input with all intervals timed out, shall allow the controller unit to recycle the WALK interval if there is no conflicting demand for service and a pedestrian call exists for that phase. However, if there is any serviceable demand on an opposing phase with the HOLD de-energized and with all intervals timed-out, the controller unit shall advance into the VEHICLE CHANGE interval and not recycle the WALK on that phase until those demands have been served.

4. *Phase Omit*—Input to cause omission of a phase, even in presence of demand, by application of an external signal. It shall affect phase selection. The omission shall continue in effect until the signal is removed. The phase to be omitted shall not present a conflicting call to any other phase, but shall accept and store calls. Activation of this input shall not affect a phase in the process of timing.

5. *Pedestrian Omit*—Input to inhibit the selection of a phase due to a pedestrian call on that phase and to prohibit the servicing of a pedestrian call on that phase. This input when active shall prevent the starting of the pedestrian movement of that phase. After the beginning of the phase GREEN, a pedestrian call shall be serviced or recycled only in the absence of a serviceable conflicting call and with PEDESTRIAN OMIT on the phase nonactive. Activation of this input shall not affect a pedestrian movement in the process of timing.

14.3.2.10 Outputs

1. *Load Switch Drivers, Basic Vehicle (Three Per Phase)*—Provision for separate GREEN, YELLOW, and RED outputs for each basic vehicle phase. A circuit closure to LOGIC GROUND shall be maintained at one of these three outputs at all times. The three outputs shall energize the appropriate vehicle signal load switching circuit to result in a GREEN, YELLOW, or RED indication for the duration of such required indication.

2. *Load Switch Drivers, Pedestrian (Three Per Phase)*—Provision of separate WALK, PEDESTRIAN CLEARANCE, and DON'T WALK outputs for each pedestrian movement. A circuit closure to LOGIC GROUND shall be maintained on at least one of these three outputs at all times. The three outputs shall energize the appropriate pedestrian signal load switching circuit to result in a WALK, PEDESTRIAN CLEARANCE, or DON'T WALK indication. The DON'T WALK output shall flash only during the PEDESTRIAN CLEARANCE interval as shown in Fig. 14.8.

3. *Check*—An output to indicate call status (vehicle or pedestrian, or both) of the phase, activated when the controller unit is not in the GREEN of that phase, which has a demand in that phase. Neither the PHASE OMIT nor PEDESTRIAN OMIT inputs shall affect the CHECK output.

4. *Phase On*—An output to indicate phase status. The PHASE ON output of a particular phase is activated during the GREEN, YELLOW, and RED CLEARANCE intervals of that phase. It shall be permissible for this output to be active during the RED DWELL state.

5. *Phase Next*—An output of a particular phase activated when the phase is committed to be next in sequence and remains present until the phase becomes active. The phase next to be serviced shall be determined at the end of the GREEN interval of the terminating phase; except that if the decision cannot be made at the end of the GREEN interval, it shall not be made until after the end of all VEHICLE CHANGE and CLEARANCE intervals.

14.3.3 Per Ring

The following features are required on a per-ring basis:

Copyright National Electrical Manufacturers Association
Provided by IHS under license with NEMA
No reproduction or networking permitted without license from IHS
Not for Resale

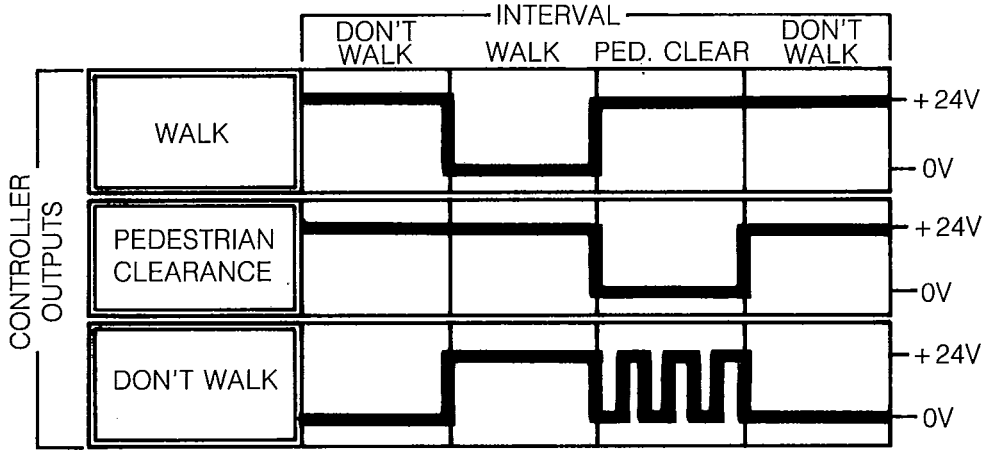

Figure 14-8

14.3.3.1 INPUTS

1. *Force Off*—Provision for termination of the GREEN timing or WALK HOLD in the nonactuated mode of the active phase in the timing ring by application of this signal—such terminating subject to presence of a serviceable conflicting call. The FORCE OFF function shall not be effective during the timing of the INITIAL, WALK, or PEDESTRIAN CLEARANCE. The FORCE OFF input shall be effective only as long as the input is sustained. (See 14.3.2.8.)

2. *Red Rest*—Input to require rest in RED of all phases in the timing ring by continuous application of an external signal. Registration of a serviceable conflicting call shall result in immediate advance from RED REST to GREEN of the demanding phase. Registration of a serviceable conflicting call before entry into the RED REST state, even with this signal applied, shall result in termination of the active phase and selection of the next phase in the normal manner and with appropriate change and clearance intervals. (See 14.3.4.4.)

3. *Inhibit Maximum Termination*—An input to disable the maximum termination functions of all phases in the selected timing ring. The input shall not inhibit the timing of MAXIMUM GREEN.

4. *Omit Red Clearance*—An input to cause omission of RED CLEARANCE interval timing(s).

5. *Pedestrian Recycle*—An input to control the recycling of the pedestrian movement. The recycling operation is dependent upon whether the phase is operating in the actuated or nonactuated mode:

a. When the phase is operating in the actuated mode, if a serviceable pedestrian call exists on the phase and the HOLD input is active, the pedestrian movement shall be recycled when the PEDESTRIAN RECYCLE input is active, regardless of whether a serviceable conflicting call exists.

b. When the phase is operating in the nonactuated mode, if the phase has reached State D (See 14.3.2.2(3)), the PEDESTRIAN OMIT is not active on the phase and a serviceable conflicting call does not exist, the pedestrian movement shall be recycled when the PEDESTRIAN RECYCLE input is active.

6. *Stop Timing*—An input which when activated causes cessation of controller unit ring timing for the duration of such activation. Upon removal of activation from this input, all portions which were timing will resume timing. During stop timing, vehicle actuations on non-GREEN phases shall be recognized; vehicle actuations on GREEN phase(s) shall reset the PASSAGE TIME timer in the normal manner; and the controller unit shall not terminate any interval or interval portion or select another phase, except by activation of the INTERVAL ADVANCE input. Operation of the INTERVAL ADVANCE with STOP TIMING activated shall clear any stored calls on a phase when the controller unit is advanced through the green interval of that phase.

7. *Maximum II (Selection)*—Input to allow the selection of a second maximum time setting on all phases of the timing ring.

14.3.3.2 OUTPUTS (SEE TABLE 14-1)

One or more of the coded status bit states shown in Table 14-1 might be omitted from a normal cycle of operation. (Authorized Engineering Information 4-7-1982). Only one of the coded status codes shall be active when the following conditions are present in the controller unit:

1. The active phase is in its GREEN interval and operating in the actuated mode.

CODE 0—Minimum Timing—When timing the INITIAL, WALK, or PEDESTRIAN CLEARANCE portions of the GREEN interval.

Copyright National Electrical Manufacturers Association
Provided by IHS under license with NEMA
No reproduction or networking permitted without license from IHS
Not for Resale

Table 14-1
CODED STATUS BITS (3 PER RING)

	Bit Logic States		
Code No.	C	B	A
0	+24V	+24V	+24V
1	+24V	+24V	0V
2	+24V	0V	+24V
3	+24V	0V	0V
4	0V	+24V	+24V
5	0V	+24V	0V
6	0V	0V	+24V
7	0V	0V	0V

Code 1—Extension Timing—That portion of the GREEN interval following the completion of the minimum timings (INITIAL, WALK, and PEDESTRIAN CLEARANCE) when timing an extension(s).

Code 2—Maximum Timing—That portion of the GREEN interval following the completion of the minimum timings, (INITIAL, WALK, and PEDESTRIAN CLEARANCE) when not timing an extension and the MAXIMUM GREEN is timing (e.g., when the HOLD input is active).

Code 3—Green Rest—That portion of the GREEN interval when the minimum timings (INITIAL, WALK, and PEDESTRIAN CLEARANCE) are complete, PASSAGE TIMER is timed out and the MAXIMUM GREEN timer is either timed out or has not started.

2. The active phase is in its GREEN interval and operating in the nonactuated mode.

Code 0—Walk Timing—When timing the WALK portion of the GREEN interval (nonactuated State A).

Code 1—Walk Hold—When the WALK output is active, WALK timing is complete and the HOLD input is active (nonactuated State B).

Code 2—Pedestrian Clearance Timing—When timing the PEDESTRIAN CLEARANCE interval or the remaining portion of MINIMUM GREEN (nonactuated State C).

Code 3—Green Rest—When the timing of PEDESTRIAN and MINIMUM GREEN intervals are complete (nonactuated State D).

3. The active phase is not in its GREEN interval.

Code 4—Yellow Change—When timing YELLOW CHANGE.

Code 5—Red Clearance—When timing RED CLEARANCE.

Code 6—Red Rest—When timing is complete and a RED indication is displayed.

Code 7—Undefined.

NEMA Standard 1-29-1981.

14.3.4 Per Unit

The following features shall be required on a per controller-unit basis:

14.3.4.1 INITIALIZATION

Initialization shall occur under either of the following conditions:

1. Restoration of power after a defined power interruption.
2. Activation of EXTERNAL START input.

Programming for initialization shall be provided to cause the controller unit to start at the beginning of the GREEN, YELLOW, or RED interval of any phase or nonconflicting phase pair.

As part of the initialization routine, vehicle and pedestrian calls shall be placed on all phases and retained until serviced.

14.3.4.2 INPUTS

1. *AC+ (Line Side)*—Fused side of 120 VAC 60-Hertz power source.
2. *AC− (Common)*—Unfused and unswitched side of 120 VAC 60-Hertz power source taken from neutral output of ac power source. This input must not be connected to LOGIC GROUND or CHASSIS GROUND within the controller unit.
3. *Chassis Ground*—Terminal for connection to the chassis of the unit. CHASSIS GROUND shall be electrically connected to the shell of the connector(s) where applicable. This input shall not be connected to LOGIC GROUND or AC− (Common) within the controller unit.
4. *Interval Advance*—A complete ON-OFF operation of this input shall cause immediate termination of the interval in process of timing. Where concurrent interval timing exists, use of this input shall cause immediate termination of the interval which would terminate next without such actuation.

Phases without stored vehicle or pedestrian calls shall be omitted from the resultant phase sequencing of the controller unit unless EXTERNAL MIN. RECALL TO ALL VEHICLE PHASES or MANUAL CONTROL ENABLE inputs are activated.

The controller unit shall select the next phase to service based on its normal sequence control method. If INTERVAL ADVANCE is activated during the GREEN interval and no serviceable call exists, the controller unit shall not advance beyond the GREEN DWELL/SELECT state, except when RED REST is active.

If INTERVAL ADVANCE is applied when the controller unit is displaying GREEN and WALK indications, the unit shall advance to the state of displaying GREEN

Copyright National Electrical Manufacturers Association
Provided by IHS under license with NEMA
No reproduction or networking permitted without license from IHS
Not for Resale

and PEDESTRIAN CLEARANCE. If INTERVAL ADVANCE is applied when the unit is displaying GREEN and PEDESTRIAN CLEARANCE, the unit shall display a steady DON'T WALK indication and advance to the GREEN DWELL/SELECT state, from which it shall immediately select a phase next and advance to the YELLOW subject to the presence of a serviceable conflicting call and the constraints of concurrent timing.

If no pedestrian provisions exist, application of the INTERVAL ADVANCE signal at any point in the GREEN interval shall cause the unit to advance to the GREEN DWELL/SELECT state from which it shall immediately select a phase next and advance to the YELLOW subject to the presence of a serviceable conflicting call and the constraints of concurrent timing.

INTERVAL ADVANCE may be used in conjunction with MANUAL CONTROL ENABLE to produce manual control of the unit with timed vehicle change and clearance intervals.

INTERVAL ADVANCE shall be used in conjunction with STOP TIME to advance through all serviceable intervals except that the controller unit shall not advance beyond the GREEN DWELL/SELECT state without a serviceable conflicting call, except when RED REST is active.

5. *Manual Control Enable*—An input to place vehicle and pedestrian calls on all phases, stop controller unit timing in all intervals except vehicle change and clearance intervals, and inhibit the operation of INTERVAL ADVANCE during vehicle change and clearance intervals.

When this function is used in conjunction with INTERVAL ADVANCE, the operation of the controller unit shall be as follows:

a. When concurrent pedestrian service is *not* provided, one activation of the INTERVAL ADVANCE shall advance the controller unit to GREEN DWELL/SELECT, from which it shall immediately select a phase next and advance to the YELLOW, subject to the constraints of concurrent timing.

b. When concurrent pedestrian service is provided, two sequential activations of the INTERVAL ADVANCE input shall be required to advance through a given GREEN interval. The first actuation shall terminate the WALK interval, and the second shall terminate the GREEN interval, including the PEDESTRIAN CLEARANCE interval.

c. All vehicle change and clearance intervals are timed internally by the controller unit. Actuations of the INTERVAL ADVANCE input during vehicle change and clearance intervals shall have no effect on the controller unit.

6. *Call to Nonactuated Mode (Two per Unit)*—Two inputs shall be provided which when activated shall cause any phase(s) appropriately programmed to operate in the NONACTUATED MODE.

The two inputs shall be designated CALL TO NONACTUATED MODE I and CALL TO NONACTUATED MODE II. When both inputs are active, all phases programmed for NONACTUATED MODE shall operate in the NONACTUATED MODE as described in 14.3.2.2(3).

Only phases equipped for pedestrian service shall be used for NONACTUATED MODE operation.

7. *External Minimum Recall to All Vehicle Phases*—Input to place a recurring demand on all vehicle phases for a minimum vehicle service.

8. *Indicator Lamp Control*—Input to disable controller unit indicators. The controller unit might not employ this input. (Authorized Engineering Information 4-7-1983).

9. *Test Input (Two per Unit)*—Test input, two per unit, for manufacturer's use only.

10. *External Start*—An input to cause the controller unit to revert to its programmed initialization phase(s) and interval(s) upon application. Upon removal of this input the controller unit shall commence normal timing.

11. *Walk Rest Modifier*—This input when true shall modify nonactuated operation only. With this input active, nonactuated phase(s) shall remain in the timed-out WALK state (rest in WALK) in the absence of a serviceable conflicting call without regard to the HOLD input status. With this input nonactive, nonactuated phase(s) shall not remain in the timed-out WALK state unless the HOLD input is active.

The controller unit shall recycle the pedestrian movement when reaching State D in the absence of a serviceable conflicting call (see 14.3.2,(13a)).

14.3.4.3 Outputs

1. *Logic Ground*—Voltage reference point and current return for controller unit input and output logic circuits. This output must not be connected to AC− (Common) or CHASSIS GROUND within the controller unit.

2. *Controller Unit Voltage Monitor*—An open collector output which is maintained TRUE (low state) only as long as the voltages within the controller unit do not drop below predetermined levels required to provide normal operation.

3. *Regulated 24 Volts DC for External Use*—(see 13.2.4(2)).

4. *Flashing Logic Output*—Alternating TRUE/FALSE logic output at 1 pulse per second repetition rate with 50 ± 2-percent duty cycle. In its FALSE state, this output shall be capable of providing 50 milliamperes of current. In its TRUE state, this output shall be capable of sinking 200 milliamperes. This output shall switch

Copyright National Electrical Manufacturers Association
Provided by IHS under license with NEMA
No reproduction or networking permitted without license from IHS
Not for Resale

within 5 degrees of the zero crossover point of the ac line.

5. *Load Switch Drivers, Vehicle Overlap (Three per Overlap)*—Provision of separate GREEN, YELLOW, and RED outputs for each overlap when determined internal to the controller unit—four overlaps maximum. A circuit closure to LOGIC GROUND shall be maintained at one of these three outputs at all times. The three outputs shall energize the appropriate overlap signal load switching circuit to result in a GREEN, YELLOW, or RED indication for the duration of such required indication. (See 14.4.6).

14.3.4.4 Red Revert

A provision within the controller unit whereby an adjustable (2-6 seconds)* minimum RED indication will be timed following the YELLOW CHANGE interval and prior to the next display of GREEN on the same phase.

NEMA Standard 1-29-1981.

14.3.5 Priority of Input Functions

The priority of input functions shall be in the following order:

1. Power-up
2. External start
3. Phase omit
4. Pedestrian omit
5. Interval advance
6. Stop timing
7. Manual control enable†
8. Force-off
9. Hold

† MANUAL CONTROL ENABLE conditions INTERVAL ADVANCE in certain circumstances (see 14.4.3.2(5)).

NEMA Standard 1-29-1981.

14.3.6 Indicators

Indication shall be provided and appropriately labeled to facilitate the determination of the operation of the unit. These indications shall consist of the following as a minimum requirement:

Phase Information—

1. Phase or phases in service
2. Phase or phases next to be serviced
3. Presence of vehicle call
4. Presence of pedestrian call

The above information shall be displayed simultaneously for all phases.

Status of Active Phase in the Ring—

1. Initial
2. Extension
3. Yellow change
4. Red clearance
5. Walk
6. Pedestrian clearance
7. Reason for green termination
   a. Gap-out
   b. Maximum time-out
   c. Force-off
8. Rest state (dwell).

The above information shall be displayed simultaneously for both rings in a dual ring controller.

NEMA Standard 4-7-1983.

14.3.7 Overlaps

All controller units of three phases or more shall be capable of being expanded to include internally generated overlaps.

When required, overlaps shall be provided in the manner, described below. To distinguish from basic phases, overlaps are designated alphabetically A, B, C, and D.

14.3.7.1 Overlap Generation

1. *Three-phase Controller Unites*—A minimum of three overlaps shall be provided. Three outputs shall be provided for each overlap—GREEN, YELLOW, and RED. If fixed overlaps are provided, they shall be as follows:

   OL A = Ø2 + Ø3
   OL B = Ø1 + Ø3
   OL C = Ø1 + Ø2

2. *Four or More Phase Controller Units*—The generation of control for overlap signal indications for controller units expandable to four or more phases shall be programmable and shall provide GREEN, YELLOW, and RED load switch drivers for each of four overlap signals.

3. *Change and Clearance Timing*—The timing for YELLOW CHANGE and RED CLEARANCE overlap signals shall be determined by either:

   a. The phase terminating the overlap, or
   b. An independent adjustment for each overlap signal.

14.3.7.2 Overlap Programming

The method of programming of overlap signal control shall be either by:

1. Means optional to the manufacturer, or
2. Use of an interchangeable plug-in printed circuit board assembly, as described below:
   a. Size of board (See Fig.14-9, Detail B).

* Not less than 2 seconds and in increments not greater than 1 second.

Copyright National Electrical Manufacturers Association
Provided by IHS under license with NEMA
No reproduction or networking permitted without license from IHS
Not for Resale

Copyright National Electrical Manufacturers Association
Provided by IHS under license with NEMA
No reproduction or networking permitted without license from IHS

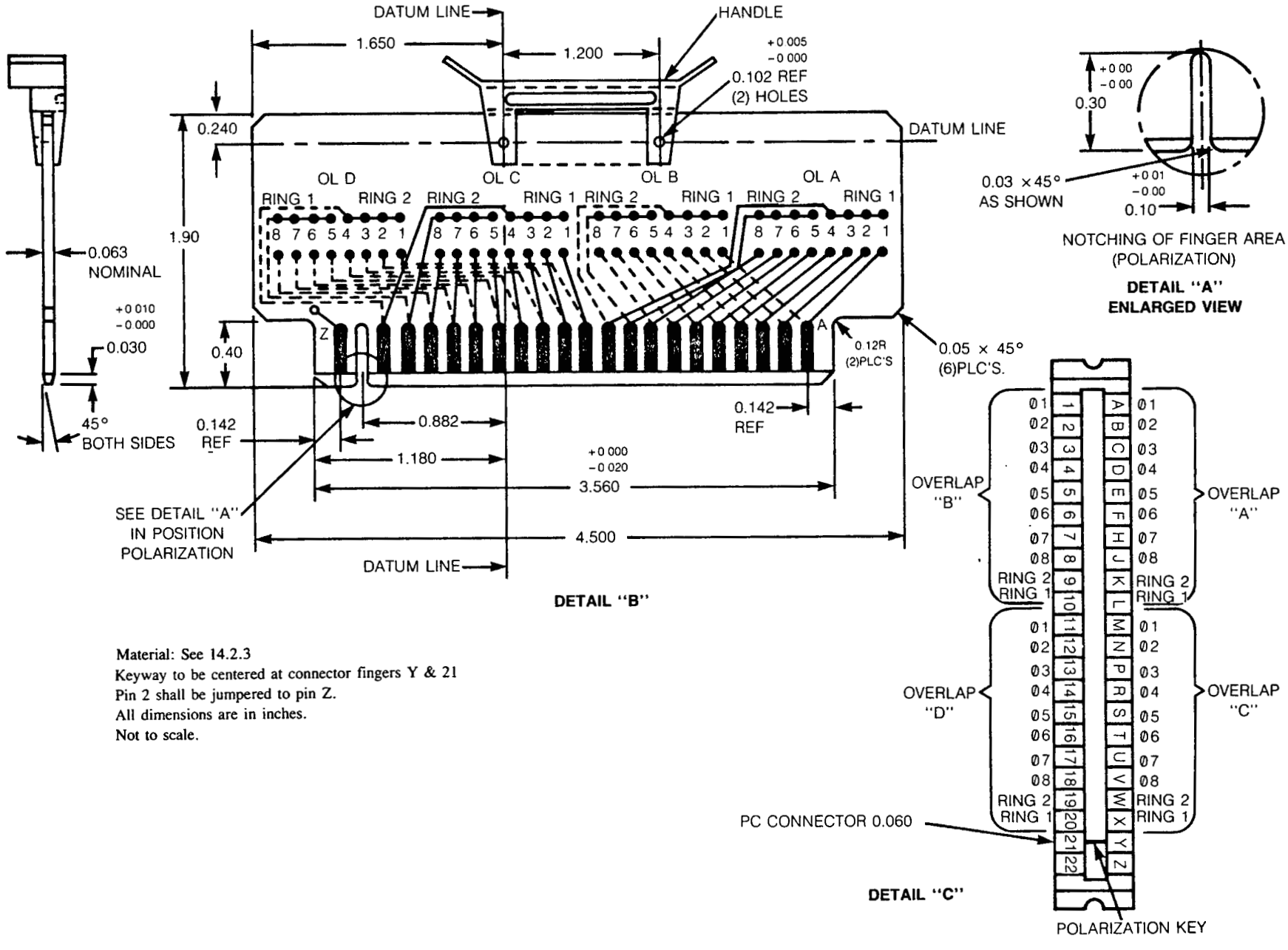

Material: See 14.2.3
Keyway to be centered at connector fingers Y & 21
Pin 2 shall be jumpered to pin Z.
All dimensions are in inches.
Not to scale.

Figure 14-9
OVERLAP BOARD

Not for Resale

b. Contact area mates with 22/44 connector with 0.156-inch spacing (Winchester Part No. 8BDJ 22, or equivalent).

c. Polarization obtained by notching of printed circuit board at "21-Y" (reference Fig. 14-9, Detail A) contact position and insertion of a key in the connector at that position.

d. Programming boards shall contain no components other than wire jumpers which shall be soldered in place.

e. Programming board shall be accessible from the front of the controller unit without removing the unit from the cabinet.

f. Programming board shall be provided with a handle (Vero Electronics Inc., Part No. CH/C/10037, or equivalent).

g. Pin assignments shall conform with Fig. 14-9, Detail C.

h. Typical Programming—The arrangement of the overlap program printed circuit board shall be as indicated in Fig. 14-9, Detail B.

When programming an overlap, a jumper shall be placed on the program printed circuit board between the pad of each phase to be included in the overlap and the corresponding ring pad for that overlap. The number of jumpers shall be the same as the number of phases in the overlap.

NEMA Standard 1-29-1981.

The following typical programming illustrates the resulting method of programming overlaps:

(1) SINGLE RING OVERLAP PROGRAMMING, TYPICAL EXAMPLE

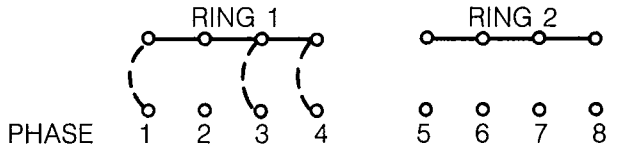

PHASE 1 + PHASE 3 + PHASE 4 OVERLAP

Dashed lines indicate programming jumpers. Ring 2 overlaps can be programmed in the same manner.

(2) DUAL RING OVERLAP PROGRAMMING, TYPICAL EXAMPLE

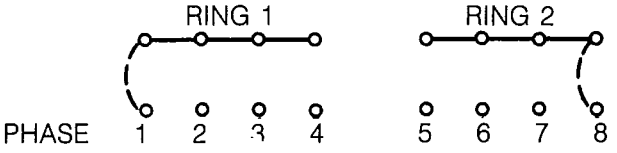

PHASE 1 + PHASE 8 OVERLAP

Dashed lines indicate programming jumpers.

Copyright National Electrical Manufacturers Association
Provided by IHS under license with NEMA
No reproduction or networking permitted without license from IHS
Not for Resale

NEMA STANDARDIZATION

The purpose of NEMA Standards, their classification and status are set forth in certain clauses of the NEMA Bylaws, which are quoted below:

Purpose of Standards

National Electrical Manufacturers Association Standards are adopted in the public interest and are designed to eliminate misunderstandings between the manufacturer and the purchaser and to assist the purchaser in selecting and obtaining the proper product for its particular need. Existence of a National Electrical Manufacturers Association Standard does not in any respect preclude any member or nonmember from manufacturing or selling products not conforming to the standard.

(Bylaw—Art. V, Sec. 1)

Definition of a Standard

A standard of the National Electrical Manufacturers Association defines a product, process or procedure with reference to one or more of the following: nomenclature, composition, construction, dimensions, tolerances, safety, operating characteristics, performance, rating, testing, and the service for which they are designed.

(Bylaw—Art. V, Sec. 2, Subsection A)

Dimensions

Where dimensions are given for interchangeability purposes, alternate dimensions satisfying the other provisions of the standards publication may be capable of otherwise equivalent performance.

(NEMA Policy Memorandum 84-2, dated June 7, 1984)

Classes of Standards

National Electrical Manufacturers Association Standards are of two classes:

1. NEMA Standard, which relates to a product commercially standardized and subject to repetitive manufacture, which standard has been approved by at least 90 percent of the members of the Subdivision eligible to vote thereon;
2. Suggested Standard for Future Design, which may not have been regularly applied to a commercial product, but which suggests a sound engineering approach to future development, which standard has been approved by at least two-thirds of the members of the Subdivision eligible to vote thereon.

(Bylaw—Art. V, Sec. 2, Subsection B)

Authorized Engineering Information

Authorized Engineering Information consists of explanatory data and other engineering information of an informative character not falling within the classification of NEMA Standard or Suggested Standard for Future Design.

(Bylaw—Art. V, Sec. 6, 1st Sentence)

Official Standards Proposal

An Official Standards Proposal is an official draft of a proposed standard which is formally recommended to an outside organization(s) for consideration, comment and/or approval.

(Bylaw—Art. V, Sec. 4, Subsection A)

Identification of Status

Standards in NEMA Standards Publications are identified in the foreword or following each standard as "NEMA Standard" or "Suggested Standard for Future Design." These indicate the status of the standard. These words are followed by a date which indicates when the standard was adopted in its present form by the Association.

The material identified as "Authorized Engineering Information" and "Official Standards Proposal" is designated similarly.

Copyright National Electrical Manufacturers Association
Provided by IHS under license with NEMA
No reproduction or networking permitted without license from IHS
Not for Resale

TRAFFIC CONTROL SYSTEMS SECTION

OF THE

NATIONAL ELECTRICAL MANUFACTURERS ASSOCIATION

MEMBER COMPANIES

Computer Service Company
Anaheim, CA 92807

Crouse-Hinds Company
Lighting Products Division
Syracuse, NY 13221

Eagle Signal Controls
Division of Gulf & Western Mfg. Co.
Austin, TX 78753

Eberle Design, Inc.
Tempe, AZ 85282

Econolite Control Products, Inc.
Anaheim, CA 92806

ETF, Inc.
Baltimore, MD 21209

HAPCO Division
Kearney-National, Inc.
Abingdon, VA 24210

Indicator Controls Corporation
Gardena, CA 90248

Kentron, Inc.
Huntsville, TX 77340

LFE Corporation
Traffic Control Division
Hamden, CT 06514

Midwest Signal Systems, Inc.
Arvada, CO 80002

Multisonics, Inc.
Dublin, CA 94566

Safetran Traffic Systems, Inc.
Colorado Springs, CO 80907

Sarasota Automation, Inc.
Sarasota, FL 33577

Solid State Devices, Inc.
Tempe, AZ 85282

3M
St. Paul, MN 55144

Traconex, Inc.
Santa Clara, CA 95050

Traffic Sensor Corporation
Corona, CA 91720

Transyt Corporation
Tallahassee, FL 32303

Copyright National Electrical Manufacturers Association
Provided by IHS under license with NEMA
No reproduction or networking permitted without license from IHS
Not for Resale