NATIONAL ELECTRICAL MANUFACTURERS ASSOCIATION

2101 L STREET N.W. WASHINGTON, D.C. 20037

Proposed, New and Revised Standards

TO ALL VOTING REPRESENTATIVES OF THE LARGE POWER TRANSFORMER VOTING CLASSIFICATION, TRANSFORMER SECTION

Subject: Revision No. 2 to NEMA Standards Publication No. **TR 1-1980,** *Transformers, Regulators and Reactors*

Dear Representative:

At its January 27, 1982, meeting the Codes and Standards Committee approved the subject revision. Please insert the revised page in your copy, and note on the front cover that your book now contains Revision No. 2.

Sincerely,

Carol Cross

Carol Cross
Standards Publications Editor

cc: C. H. White

Copyright National Electrical Manufacturers Association
Provided by IHS under license with NEMA
No reproduction or networking permitted without license from IHS

Not for Resale

NEMA TR*1 80 2595512 0046012 7

STANDARDS PUBLICATION / NO. TR 1-1980

nema

transformers, regulators and reactors

NEMA

NATIONAL ELECTRICAL MANUFACTURERS ASSOCIATION ■ 2101 L STREET, N.W., WASHINGTON, D.C. 20037

Copyright National Electrical Manufacturers Association
Provided by IHS under license with NEMA
No reproduction or networking permitted without license from IHS
Not for Resale

TABLE OF CONTENTS

	Part	Page
GENERAL	0	0
RATINGS		
Preferred Voltage Ratings	0	1
Forced-air (FA) and Forced-oil (FOA) Ratings	0	1
PERFORMANCE		
Radio Influence Voltage Levels	0	1
Power Factor of Insulation of Oil-immersed Transformers	0	2
Audible Sound Levels	0	2
MANUFACTURING		
External Clearances Between Bushing Live Parts	0	5
Dimensions of Oil Transformer Bushings	0	6
Mounting Flange Dimensions of Bushings for Use in Oil-filled Apparatus	0	7
Dimensional Characteristics of EHV Transformer Bushings	0	8
POWER TRANSFORMERS	1	0
DISTRIBUTION TRANSFORMERS	2	0
Design Test for Enclosure Security of Padmounted Compartmental Transformers	2	1
Design Tests for Fault Current Capability of Overhead Distribution Transformer Enclosures	2	5
SECONDARY NETWORK TRANSFORMERS	3	0
DRY-TYPE TRANSFORMERS	4	0
UNIT SUBSTATION TRANSFORMERS	5	0
TERMINOLOGY	6	0
TEST CODE	7	0
Test Code for Measurement of Radio Influence Voltage Levels	7	1
Transformer Test Report	7	3
Transformer Impulse Test Report	7	4
Reactor Test Report	7	5
TRANSMISSION AND DISTRIBUTION VOLTAGE REGULATORS	8	0
CURRENT-LIMITING REACTORS	9	0
ARC FURNACE TRANSFORMERS	10	0
SHUNT REACTORS	11	0
UNDERGROUND-TYPE THREE-PHASE DISTRIBUTION TRANSFORMERS	12	0

© 1981 by National Electrical Manufacturers Association

Copyright National Electrical Manufacturers Association
Provided by IHS under license with NEMA
No reproduction or networking permitted without license from IHS

Not for Resale

FOREWORD

The standards appearing in this publication have been developed by the Transformer Section and have been approved for publication by the National Electrical Manufacturers Association. They are used by the electrical industry to promote production economies and to assist users in the proper selection of transformers.

The Transformer Section is working actively with the American National Standards Committee, C57, on Transformers, Regulators and Reactors, in the development, correlation and maintenance of national standards for transformers. This Committee operates under the procedures of the American National Standards Institute (ANSI).

It is the policy of the NEMA Transformer Section to remove material from the NEMA Standards Publication as it is adopted and published in the American National Standard C57 series. The NEMA Standards Publication for *Transformers, Regulators and Reactors* references these and other American National Standards applying to transformers, and is intended to supplement, without duplication, the American National Standards.

The NEMA Standards Publication for *Transformers, Regulators and Reactors* contains provision for the following:

1. *American National Standards* adopted by reference and applicable exceptions approved by NEMA, if any.
2. *NEMA Official Standards Proposals.* These are official drafts of proposed standards developed within NEMA or in cooperation with other interested organizations, for consideration by ANSI. They have a maximum life of five years, during which time they may be approved as American National Standards or adopted as NEMA Standards, or rescinded.
3. *Manufacturing Standards.* These are NEMA Standards which are primarily of interest to the manufacturers of transformers and which are not yet included in an American National Standard.
4. *Standards Which Are Controversial.* These are NEMA Standards, on which there is a difference of opinion within Committee C57. The NEMA version will be included in the NEMA Standards Publication until such time as the differences between ANSI and NEMA are resolved.

NEMA Standards Publications are subject to periodic review and take into consideration user input. They are being revised constantly to meet changing economic conditions and technical progress. Users should secure latest editions. Proposed or recommended revisions should be submitted to:

Manager, Engineering Department
National Electrical Manufacturers Association
2101 L Street, N.W.
Washington, D.C. 20037

* * *

NEMA Standards Publication TR 1-1980 revises and supersedes TR 1-1974. The NEMA Standards, Suggested Standards for Future Design, and Authorized Engineering Information which appear in this publication unchanged since their appearance in TR 1-1974 were reaffirmed. Those which have been revised are followed by the appropriate classification and the date "11-20-1980."

This publication also incorporates in Part 2 revised material previously published in NEMA Official Standards Proposals TR-P7-1975, *Design Tests for Fault Current Capability of Overhead Distribution Transformer Enclosures,* and TR-P9-1977, *Testing the Design and Pad-mounted Compartmental Transformers for Enclosure Security.* These Official Standards Proposals have now been approved as NEMA Standards.

Copyright National Electrical Manufacturers Association
Provided by IHS under license with NEMA
No reproduction or networking permitted without license from IHS
Not for Resale

SCOPE

This publication refers to all ANSI C57 Standards that have been approved by NEMA. In addition it includes certain NEMA Standard test methods, test codes, properties, etc., of liquid-immersed transformers, regulators, and reactors that are not American National Standards.

NEMA STANDARDS PUBLICATIONS

Please consult NEMA Headquarters for further information concerning NEMA Standards Publications. Orders for NEMA Standards Publications to which reference is made in this book must be accompanied by a remittance.

Please note that ANSI publications are available only from:

American National Standards Institute, Inc.
1430 Broadway
New York, NY 10018

Copyright National Electrical Manufacturers Association
Provided by IHS under license with NEMA
No reproduction or networking permitted without license from IHS
Not for Resale

Part 0
GENERAL

The following American National Standards have been approved as NEMA Standards and should be inserted in this Part 0:

ANSI/IEEE C57.12.00-1980*	*General Requirements for Liquid-Immersed Distribution, Power and Regulating Transformers*
ANSI C57.12.70-1978*	*Terminal Markings and Connections for Distribution and Power Transformers*
ANSI/IEEE 21-1976*	*Outdoor Apparatus Bushings, Part 1 General Requirements and Test Procedure*
ANSI/IEEE 24-1977*	*Outdoor Apparatus Bushings, Part 2 Electrical, Dimensional, and Related Requirements*

The NEMA Standards TR 1-0.01 through TR 1-0.09 on the following pages (see Part 0 Pages 1-9) also apply generally to transformers.

NEMA Standard 11-20-1980.

* Copies of American National Standards are available from the American National Standards Institute, Inc., 1430 Broadway, New York, NY 10018.

Copyright National Electrical Manufacturers Association
Provided by IHS under license with NEMA
No reproduction or networking permitted without license from IHS
Not for Resale

Part 0
GENERAL

Ratings

TR 1-0.01 PREFERRED VOLTAGE RATINGS

Preferred system voltages and corresponding transformer voltage ratings are given in the American National Standard *Voltage Ratings for Electrical Power Systems and Equipment (60 Hz),* C84.1-1977. It is recommended that these ratings be used as a guide in the purchase and operation of transformers.

Authorized Engineering Information 11-20-1980.

TR 1-0.02 FORCED-AIR (FA) AND FORCED-OIL (FOA) RATINGS

Under the conditions of par. 5.11 of American National Standard ANSI/IEEE C57.12.00-1980, the relationship between self-cooled ratings and forced-air-cooled or forced-oil-cooled ratings shall be in accordance with the table below.

NEMA Standard 11-20-1980.

Class	Self-cooled Ratings* (kVA)		Percent of Self-cooled Ratings With Auxiliary Cooling	
	Single Phase	Three Phase	First Stage	Second Stage
OA/FA	501-2499	501-2499	115	. . .
OA/FA	2500-9999	2500-11999	125	. . .
OA/FA	10000 and above	12000 and above	133-1/3	. . .
OA/FA/FA	10000 and above	12000 and above	133-1/3	166-2/3
OA/FA/FOA	10000 and above	12000 and above	133-1/3	166-2/3
OA/FOA/FOA	10000 and above	12000 and above	133-1/3	166-2/3

* In the case of multi-winding transformers or autotransformers, the ratings given are the equivalent two-winding ratings.

Performance

TR 1-0.03 RADIO INFLUENCE VOLTAGE LEVELS

The following values apply to liquid-filled transformers. They do not apply to load tap changing during switching or to operation of auxiliary relays and control switches.

A. Distribution Transformers

Radio influence voltage levels for distribution transformers, 500 kVA and smaller, for systems rated 26 kV and less, and 125 BIL and less, shall not exceed 100 microvolts when measured in accordance with TR 1-7.01. The test voltage shall be the line-to-neutral voltage corresponding to 110 percent excitation of the transformer. This will be the coil voltage for wye connections and $1/\sqrt{3}$ times the coil voltage for delta connections.

B. Power Transformers 1550 kV BIL and Less and Distribution Transformers 150 kV BIL and Higher

Preferred Nominal System Voltage, kV	Test Voltage, kV	Maximum Radio Influence Voltage Levels, Microvolts
0.6	0.76	. . .
2.4	1.67	250
4.16	2.89	250
4.8	3.34	250
7.2	5.01	250
8.32	5.77	250
12.0	8.00	250
12.47	8.32	250
13.2	8.79	250
14.4	9.41	250
23.0	15.7	650
27.6	18.8	650
34.5	23.0	650
46.0	29.3	1250
69.0	44.0	1250
115.0	73.4	2500
138.0	88.0	2500
161.0	102.5	5000
230.0	147.0	5000
288.0	183.0	5000
345.0	220.0	5000

NEMA Standard 11-12-1970.

Copyright National Electrical Manufacturers Association
Provided by IHS under license with NEMA
No reproduction or networking permitted without license from IHS

Not for Resale

TR-1.0.04 POWER FACTOR OF INSULATION OF OIL-IMMERSED TRANSFORMERS

While the real significance which can be attached to the power factor of oil-immersed transformers is still a matter of opinion, experience has shown that power factor is helpful in assessing the probable conditions of the insulation when good judgment is used.

The proper interpretation of power factor of oil-immersed transformers is being given careful attention by manufacturers in connection with the problems of (1) selecting insulating materials, (2) sealing, and (3) processing the transformers. However, it is the comparative values which are guides for the successful solution for these problems rather than an absolute value of power factor.

The generally accepted factory tests for proving the insulation level are the prescribed low-frequency tests and impulse tests given in the American National Standard *Test Code for Liquid-Immersed Distribution, Power and Regulating Transformers,* C57.12.90-1980.

When required, a factory power-factor test can be made, and this measurement will be of value for comparison with field power-factor measurements to assess the probable condition of the insulation. It is not feasible to establish standard power-factor values for oil-immersed transformers because:

1. Experience has definitely proved that little or no relation exists between power factor and the ability of the transformer to withstand the prescribed dielectric tests.
2. Experience has definitely proved that the variation in power factor with temperature is substantial and erratic so that no single correction curve will fit all cases.

When a factory power-factor measurement of a transformer is required, the measurement should be made with the insulation at room temperature, preferably at or close to 20°C.

Authorized Engineering Information 11-20-1980.

TR 1-0.05 AUDIBLE SOUND LEVELS

Transformers shall be so designed that the average sound level will not exceed the values given in Tables 0-1 through 0-3 when measured at the factory in accordance with the conditions outlined in ANSI/IEEE C57.12.90-1980.

Rectifier, railway, furnace, grounding, mobile and mobile unit substation transformers are not covered by the tables. The tables do not apply during the time that power switches are operating in load-tap-changing transformers and in transformers with integral power switches.

NEMA Standard 11-20-1980.

Copyright National Electrical Manufacturers Association
Provided by IHS under license with NEMA
No reproduction or networking permitted without license from IHS

Not for Resale

Copyright National Electrical Manufacturers Association
Provided by IHS under license with NEMA
No reproduction or networking permitted without license from IHS
Not for Resale

Table 0-1
AUDIBLE SOUND LEVELS FOR OIL-IMMERSED POWER TRANSFORMERS

Column 1—Class* OA, OW and FOW Ratings
Column 2—Class* FA and FOA First-stage Auxiliary Cooling**‡
Column 3—Straight FOA* Ratings, FA* FOA* Second-stage Auxiliary Cooling **‡

Average Sound Level ††, Decibels	Equivalent Two-winding Rating†																	
	350 kV BIL and Below			450, 550, 650 kV BIL			750 and 825 kV BIL			900 and 1050 kV BIL			1175 kV BIL			1300 kV BIL and Above		
	1	2	3	1	2	3	1	2	3	1	2	3	1	2	3	1	2	3
57	700	...	...	...	...	...	...	...	...	...	...	...	...	...	...	...	...	...
58	1000	...	...	...	...	...	...	...	...	...	...	...	...	...	...	...	...	...
59	...	...	...	700	...	...	...	...	...	...	...	...	...	...	...	...	...	...
60	1500	...	...	1000	...	...	...	...	...	...	...	...	...	...	...	...	...	...
61	2000	...	...	...	...	...	...	...	...	...	...	...	...	...	...	...	...	...
62	2500	...	...	1500	...	...	...	...	...	...	...	...	...	...	...	...	...	...
63	3000	...	...	2000	...	...	...	...	...	...	...	...	...	...	...	...	...	...
64	4000	...	...	2500	...	...	...	...	...	...	...	...	...	...	...	...	...	...
65	5000	...	...	3000	...	...	...	...	...	...	...	...	...	...	...	...	...	...
66	6000	...	...	4000	...	...	3000	...	...	...	...	...	...	...	...	...	...	...
67	7500	6250#	...	5000	3750#	...	4000	3125#		...	...	...	...	...	...	...	...	...
68	10000	7500	...	6000	5000	...	5000	3750	...	...	...	...	...	...	...	...	...	...
69	12500	9375	...	7500	6250	...	6000	5000	...	...	...	...	...	...	...	...	...	...
70	15000	12500	...	10000	7500	...	7500	6250	...	...	...	...	...	...	...	...	...	...
71	20000	16667	...	12500	9375	...	10000	7500	...	...	...	...	...	...	...	...	...	...
72	25000	20000	20800	15000	12500	...	12500	9375	...	...	...	...	...	...	...	...	...	...
73	30000	26667	25000	20000	16667	...	15000	12500	...	12500	...	...	...	...	...	...	...	...
74	40000	33333	33333	25000	20000	20800	20000	16667	...	15000	...	...	12500	...	...	...	...	...
75	50000	40000	41667	30000	26667	25000	25000	20000	20800	20000	16667	...	15000	...	...	12500	...	...
76	60000	53333	50000	40000	33333	33333	30000	26667	25000	25000	20000	20800	20000	16667	...	15000	...	...
77	80000	66667	66667	50000	40000	41667	40000	33333	33333	30000	26667	25000	25000	20000	20800	20000	16667	...
78	100000	80000	83333	60000	53333	50000	50000	40000	41667	40000	33333	33333	30000	26667	25000	25000	20000	20800
79	...	106667	100000	80000	66667	66667	60000	53333	50000	50000	40000	41667	40000	33333	33333	30000	26667	25000
80	...	133333	133333	100000	80000	83333	80000	66667	66667	60000	53333	50000	50000	40000	41667	40000	33333	33333
81	...	...	166667	...	106667	100000	100000	80000	83333	80000	66667	66667	60000	53333	50000	50000	40000	41667
82	...	...	200000	...	133333	133333	...	106667	100000	100000	80000	83333	80000	66667	66667	60000	53333	50000
83	...	...	250000	...	...	166667	...	133333	133333	...	106667	100000	100000	80000	83333	80000	66667	66667
84	...	...	300000	...	...	200000	...	...	166667	...	133333	133333	...	106667	100000	100000	80000	83333
85	...	...	400000	...	...	250000	...	...	200000	...	...	166667	...	133333	133333	...	106667	100000
86	...	...	...	...	...	300000	...	...	250000	...	...	200000	...	...	166667	...	133333	133333
87	...	...	...	...	...	400000	...	...	300000	...	...	250000	...	...	200000	...	...	166667
88	...	...	...	...	...	...	...	...	400000	...	...	300000	...	...	250000	...	...	200000
89	...	...	...	...	...	...	...	...	...	...	...	400000	...	...	300000	...	...	250000
90	...	...	...	...	...	...	...	...	...	...	...	...	...	...	400000	...	...	300000
91	...	...	...	...	...	...	...	...	...	...	...	...	...	...	...	...	...	400000

* Classes of cooling (see 2.6.1 of American National Standard C57.12.00-1980).
** First- and second-stage auxiliary cooling (see TR 1-0.02).
† The equivalent two-winding 55°C or 65°C rating is defined as one-half the sum of the kVA rating of all windings.
# Sixty-seven decibels for all kVA ratings equal to this or smaller.
†† For intermediate kVA ratings, use the average sound level of the next larger kVA rating.
‡ For column 2 and 3 ratings, the sound levels are with the auxiliary cooling equipment in operation.

Table 0-2
AUDIBLE SOUND LEVELS FOR LIQUID-IMMERSED DISTRIBUTION TRANSFORMERS AND NETWORK TRANSFORMERS

Equivalent Two-winding kVA	Average Sound Level, Decibels
0-50	48
51-100	51
101-300	55
301-500	56
750	57
1000	58
1500	60
2000	61
2500	62

Table 0-3
AUDIBLE SOUND LEVELS FOR DRY-TYPE TRANSFORMERS 15000-VOLT NOMINAL SYSTEM VOLTAGE AND BELOW

	Average Sound Level, Decibels			
Equivalent Two-winding kVA	Self-cooled Ventilated (1)	Self-cooled Sealed (2)	Equivalent Two-winding kVA	Average Sound Level, Decibels Ventilated Forced Air Cooled* (3)
0-50	50	50	. . .	. . .
51-150	55	55	. . .	. . .
151-300	58	57	3-300	67
301-500	60	59	301-500	67
501-700	62	61	501-833	67
701-1000	64	63	834-1167	67
1001-1500	65	64	1168-1667	68
1501-2000	66	65	1668-2000	69
2001-3000	68	66	2001-3333	71
3001-4000	70	68	3334-5000	73
4001-5000	71	69	5001-6667	74
5001-6000	72	70	6668-8333	75
6001-7500	73	71	8334-10000	76

Columns 1 and 2—Class AA rating.
Column 3—Class FA and AFA ratings.
* Does not apply to sealed-type transformers.

Copyright National Electrical Manufacturers Association
Provided by IHS under license with NEMA
No reproduction or networking permitted without license from IHS

Not for Resale

Manufacturing

TR 1-0.06 EXTERNAL CLEARANCES BETWEEN BUSHING LIVE PARTS*†

Nominal Systems Voltage kV	Minimum Clearance Between Live Parts of One Phase and Ground		Minimum Clearance Between Live Parts of Different Phases or Live Parts of Different Windings		Minimum Clearance Between Top Shed of Porcelain of Bushings of Different Phases	
	Distribution Transformers in (mm)	Power Transformers in (mm)	Distribution Transformers in (mm)	Power Transformers in (mm)	Distribution Transformers in (mm)	Power Transformers in (mm)
1.2	1 (25.4 mm)	2 (50.8 mm)	1 (25.4 mm)	2 (50.8 mm)	1 (25.4 mm)	1 (25.4 mm)
2.5	2 (50.8 mm)	3 (76.2 mm)	2 (50.8 mm)	3 (76.2 mm)	1 (25.4 mm)	1.5 (38.1 mm)
5.0	2.5 (63.5 mm)	3.5 (88.9 mm)	2.5 (63.5 mm)	4 (101.6 mm)	1.5 (38.1 mm)	2 (50.8 mm)
8.66	3.5 (88.9 mm)	4.5 (114.3 mm)	4 (101.6 mm)	5 (127.0 mm)	2 (50.8 mm)	2.5 (63.5 mm)
15	5 (127.0 mm)	6 (152.4 mm)	5.5 (139.7 mm)	6.5 (165.1 mm)	3 (76.2 mm)	3.5 (88.9 mm)
25	5.75 (146.1 mm)	8 (203.2 mm)	7 (177.8 mm)	9 (228.6 mm)	4.5 (114.3 mm)	6 (152.4 mm)
34.5	12 (304.8 mm)	12 (304.8 mm)	13 (330.2 mm)	13 (330.2 mm)	8 (203.2 mm)	8 (203.2 mm)
46	15 (381.0 mm)	15 (381.0 mm)	17 (431.8 mm)	17 (431.8 mm)	12 (304.8 mm)	12 (304.8 mm)
69	23 (584.2 mm)	23 (584.2 mm)	25 (635.0 mm)	25 (635.0 mm)	19 (482.6 mm)	19 (482.6 mm)
92	...	30 (762.0 mm)	...	33 (838.2 mm)	...	27 (685.8 mm)
115	...	37 (939.8 mm)	...	41 (1041.4 mm)	...	36 (914.4 mm)
138	...	44 (1117.6 mm)	...	49 (1244.6 mm)	...	44 (1117.6 mm)
161	...	52 (1320.8 mm)	...	57 (1447.8 mm)	...	52 (1320.8 mm)
196	...	63 (1600.2 mm)	...	70 (1778 mm)	...	65 (1651 mm)
230	...	76 (1930.4 mm)	...	84 (2133.6 mm)	...	79 (2006.6 mm)

*The external clearances given in the above table are for transformers intended for operation at altitudes of 3300 feet (1000 meters) or less. For operation at altitudes in excess of 3300 feet (1000 meters), the external clearances shall be increased to compensate for the decrease in sparkover voltage at the rate of one percent (0.01) per 330 feet (100 meters) increase in altitude in excess of 3300 feet (1000 meters).

NEMA Standard 11-20-1980.

† Suitable grading of local stresses may allow smaller clearances.

Authorized Engineering Information 11-20-1980.

Copyright National Electrical Manufacturers Association
Provided by IHS under license with NEMA
No reproduction or networking permitted without license from IHS

Not for Resale

Copyright National Electrical Manufacturers Association
Provided by IHS under license with NEMA
No reproduction or networking permitted without license from IHS
Not for Resale

TR 1-0.07 DIMENSIONS OF OIL TRANSFORMER BUSHINGS*

DETAIL "A"

BUSHING ELEVATION

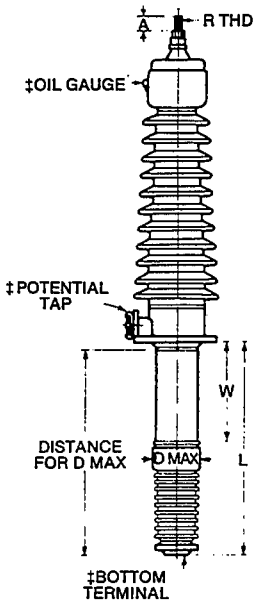

DETAIL "B"

FLANGE

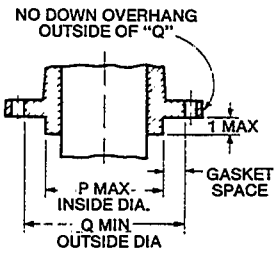

‡RELATIVE LOCATIONS FLANGE, OIL GAUGE, POTENTIAL TAP, BOTTOM TERMINAL

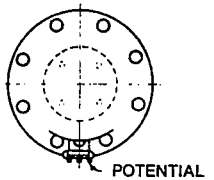

TOP VIEW

DETAIL "D"

BOTTOM TERMINAL

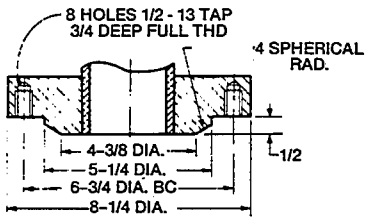

Line No.	BIL (kV)	Rating: Rated Continuous Current†† (A) Transformer	Lower End: Length of Bushing from Flange Seat to Lower End ± 1/8 L	Depth of Current Transformer Pocket and Distance from Bushing Gasket Surface to Minimum Oil Level W	Maximum Diameter from 1 in below Flange to Lower End of Bushing D	Bottom End Terminal‡: Inside Diameter Tube Minimum	Bottom End Terminal‡: Detail D Fig. No.	Flange: Gasket Space: Inside Diameter Maximum P	Flange: Gasket Space: Outside Diameter Minimum Q	Flange: Provision for Bolts‡: No.	Flange: Provision for Bolts‡: Bolt Hole Size	Flange: Provision for Bolts‡: Bolt Circle Diameter	Top End Terminal: Usable Engagement Length Minimum A	Top End Terminal: Thread Class UNF-2A R
10**	900	1200	50-1/4	23	12	1-5/8▲	(3)	12-3/8	14-3/8	8	1-1/4	15-3/4	2	1-1/2-12
11**	900	1600	50-1/4	23	12	†	(3)	12-3/8	14-3/8	8	1-1/4	15-3/4	2-1/3	2-12
12	900	2500	50-1/4	23	12	†	(3)	12-3/8	14-3/8	8	1-1/4	15-3/4	3	3-12

* All dimensions are given in inches.

** These bushings are dimensionally interchangeable between circuit breakers and transformers. Dimensional interchangeability does not necessarily imply mechanical or electrical interchangeability on apparatus of different manufacturers.

† Not designed for use with draw lead.

†† For draw lead application, the continuous current rating is limited to the current rating of the draw lead applied by the equipment manufacturer.

‡ When furnished, oil gage and potential tap are in line midway between two adjacent flange bolt holes and between two adjacent bottom end tapped holes.

Suggested Standard for Future Design 11-20-1980.

▲ Revised 1-28-1982.

TR 1-0.08 MOUNTING FLANGE DIMENSIONS OF BUSHINGS FOR USE IN OIL-FILLED APPARATUS

Bolt Circle Diameter, Inches (mm)	Number of Holes	Bolt Hole Size, Inches (mm) *
6 (152.40 mm)	4	7/8 (22.22 mm)
7-1/4 (184.15 mm)	4	7/8 (22.22 mm)
8-1/4 (209.55 mm)	4	7/8 (22.22 mm)
9-1/4 (234.95 mm)	6	7/8 (22.22 mm)
10-1/4 (260.35 mm)	6	7/8 (22.22 mm)
11-1/4 (285.75 mm)	6	7/8 (22.22 mm)
12-1/4 (311.15 mm)	6	7/8 (22.22 mm)
13-1/4 (336.55 mm)	6	1-1/4 (31.75 mm)
14-1/4 (361.95 mm)	6	1-1/4 (31.75 mm)
15-3/4 (400.05 mm)	8	1-1/4 (31.75 mm)
18-1/2 (469.9 mm)	12	1-1/4 (31.75 mm)
21 (533.4 mm)	12	1-1/4 (31.75 mm)
23 (584.2 mm)	12	1-1/4 (31.75 mm)
25 (635 mm)	12	1-1/4 (31.75 mm)
28 (711.2 mm)	12	1-1/4 (31.75 mm)
32 (812.8 mm)	16	1-1/4 (31.75 mm)
36 (914.4 mm)	16	1-1/4 (31.75 mm)

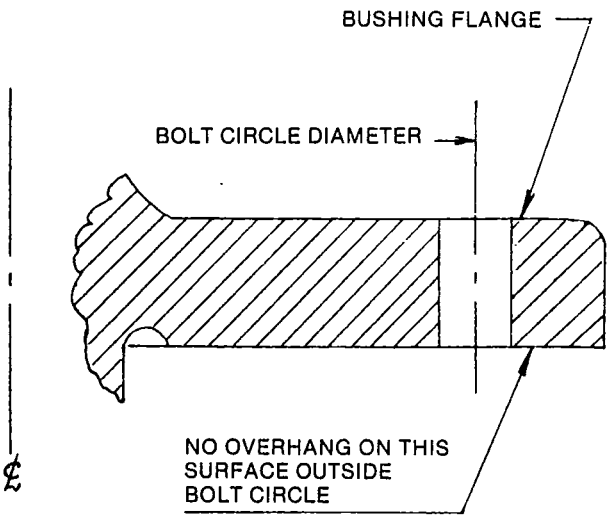

*This dimension represents maximum design capability. Refer to Tables 7.1(a), 7.1(b) and 7.1(c) in C76.1-1964 (1977) for actual values for specific bushing designs or ratings.

NEMA Standard 11-20-1980.

Copyright National Electrical Manufacturers Association
Provided by IHS under license with NEMA
No reproduction or networking permitted without license from IHS

Not for Resale

Copyright National Electrical Manufacturers Association
Provided by IHS under license with NEMA
No reproduction or networking permitted without license from IHS
Not for Resale

TR 1-0.09 DIMENSIONAL CHARACTERISTICS OF EHV TRANSFORMER BUSHINGS (SEE PART 0 PAGE 9)

Rating		Lower End					Flange					Top End Terminal	
Col.1	Col. 2	Col. 3	Col. 4	Col. 5	Col. 6	Col. 7	Col. 8	Col. 9	Col. 10	Col. 11	Col. 12	Col. 13	Col. 14
					Bottom End Terminal		Gasket Space		Provision for Bolts				
BIL	Rated Continuous Current	Length of Bushing From Flange Seat to Lower End ± 3/8 Inch	Depth of Current Transformer Pocket and Distance From Bushing Gasket Surface to Minimum Oil Level	Diameter from 1 Inch Below Flange to Lower End of Bushing Maximum	Inside Tube Diameter Minimum	Washer Diameter Maximum	Inside Diameter Maximum	Outside Diameter Minimum	Number	Bolt Hole Size	Bolt Circle Diameter	Usable Thread Length Minimum	Thread Class UNF-2A
kV	Amperes	L	W	D		N	P	Q				A	B
900	*	48	23	12-1/2	2	8-1/4	12-5/8	14-3/8	8	1-1/4	15-3/4	2-1/2	2-12
900	1600	48	23	12-1/2	**	8-1/4	12-5/8	14-3/8	8	1-1/4	15-3/4	2-1/2	2-12
1175	*	54-1/2	23	15-3/4	2	8-1/4	17-1/8	19-1/2	12	1-1/4	21	2-1/2	2-12
1175	1600	54-1/2	23	15-3/4	**	8-1/4	17-1/8	19-1/2	12	1-1/4	21	2-1/2	2-12
1300	1600	62	27	18-1/4	**	8-1/4	19-3/8	21-3/8	12	1-1/4	23	2-1/2	2-12
1550	1600	68-1/2	27	20	**	12	21	23	12	1-1/4	25	2-1/2	2-12
1675	1600	72	27	23	**	12	24	26	12	1-1/4	28	2-1/2	2-12
1800	1600	72	23	25	**	12	26	30	16	1-1/4	32	2-1/2	2-12

All dimensions in inches.

* Continuous current rating limited by size of transformer drawlead.
** Not designed for use with drawlead.

Suggested Standard for Future Design 9-7-1977.

BOTTOM TERMINAL DETAIL

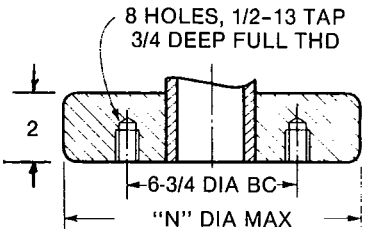

BUSHING ELEVATION

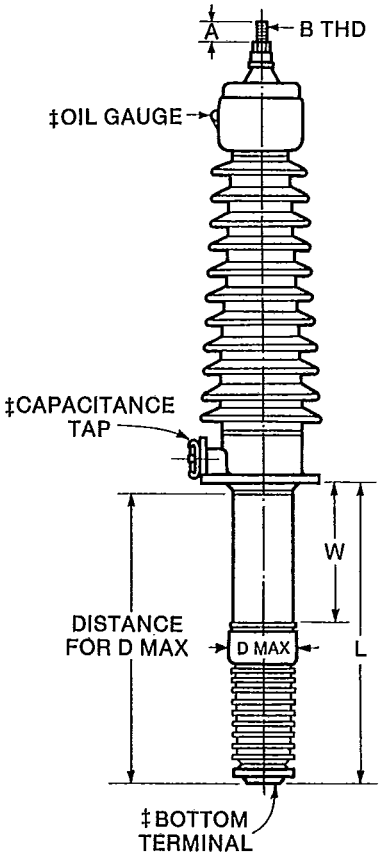

FLANGE DETAIL

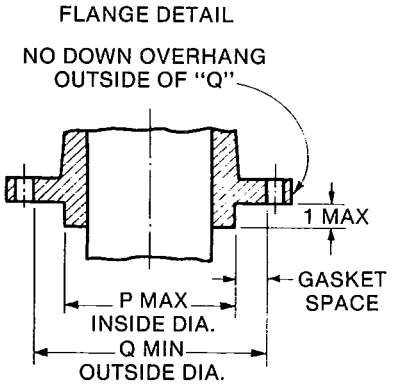

RELATIVE LOCATIONS FLANGE OIL GAUGE CAPACITANCE TAP BOTTOM TERMINAL

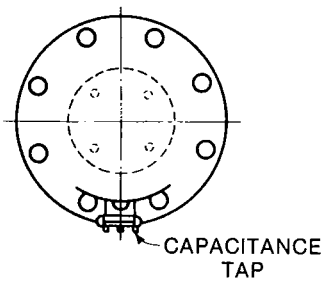

‡TOP VIEW

Copyright National Electrical Manufacturers Association
Provided by IHS under license with NEMA
No reproduction or networking permitted without license from IHS

Not for Resale

Part 1

POWER TRANSFORMERS

The American National Standard *Requirements for Transformers 230000 Volts and Below, 833/958 Through 8333/10417 kVA, Single-Phase, and 750/862 Through 60000/80000/100000 kVA Three-Phase,* C57.12.10-1977*, has been approved as a NEMA Standard for power transformers and should be inserted in this Part 1.

The American National Standard *Requirements for Load-Tap-Changing Transformers, 230,000 Volts and Below, 3750 Through 60000/80000/100000 kVA, Three-Phase,* C57.12.30-1977*, has been approved by NEMA and should be inserted in this Part 1.

The American National Standard *Requirements for Pad-Mounted Compartmental-Type Self-cooled, Three-Phase Distribution Transformers with High-Voltage Bushings; High-Voltage, 34 500 GrdY/19920 Volts and Below; 2500 kVA and Smaller,* C57.12.22-1980*, also applies to power transformers.

The American National Standard *Guide for Loading Oil-Immersed Power Transformers,* C57.92*, has been approved by NEMA and should be inserted in this Part 1.

The following other parts of this NEMA Publication No. TR 1 shall also apply:

Part 1	General
Part 6	Terminology
Part 7	Test Code
Part 12	Underground-type Three-phase Distribution Transformer

NEMA Standard 11-20-1980.

The NEMA Standards Publication *Guide for Loading Oil-immersed Power Transformers with 65°C Average Winding Rise,* TR 98-1978, has been approved for inclusion in Part 1 of this NEMA Publication No. TR 1-1980.

Authorized Engineering Information 11-20-1980.

* Copies of American National Standards are available from the American National Standards Institute, Inc., 1430 Broadway, New York, New York, 10018.

Copyright National Electrical Manufacturers Association
Provided by IHS under license with NEMA
No reproduction or networking permitted without license from IHS

Not for Resale

Part 2

DISTRIBUTION TRANSFORMERS

The following American National Standards have been approved as NEMA Standards for distribution transformers and should be inserted in this Part 2:

C57.12.20-1980* *Requirements for Overhead-Type Distribution Transformers, 67000 Volts and Below 500 kVA and Smaller*

C57.12.21-1980* *Requirements for Pad-Mounted, Compartmental-Type, Self-Cooled, Single-Phase Distribution Transformers with High-Voltage Bushings; (High-Voltage, 34 500 GrdY/19 920 Volts and Below; Low-Voltage, 240/120 Volts; 167 kVA and Smaller)*

C57.12.22-1980* *Requirements for Pad-Mounted, Compartmental-Type, Self-Cooled, Three-Phase Distribution Transformers with High-Voltage Bushings; High-Voltage, 34 500 GrdY/19920 Volts and Below; 2500 kVA and Smaller*

C57.12.23-1978* *Requirements for Underground-Type Single-Phase Distribution Transformers, with Separable Insulated High-Voltage Connectors, 100 kVA and Smaller; High-Voltage 24 940 GrdY/14 400 Volts and Below; Low-Voltage 240/120*

C57.12.25-1980* *Requirements for Pad-Mounted, Compartmental-Type, Self-Cooled, Single-Phase Distribution Transformers with Separable Insulated High-Voltage Connectors: High-Voltage 34500 GrdY/19920 Volts and Below: Low-Voltage 240/120 Volts; 167 kVA and Smaller*

C57.12.26-1975* *Pad-Mounted Compartmental-Type Self-Cooled, Three-Phase Distribution Transformers for use with Separable High-Voltage Connectors (High-Voltage 24940 GrdY/14400 Volts and Below: 2500 kVA and Smaller)*

C57.91-1980* *Loading Mineral Oil-Immersed Overhead-type Distribution Transformers with 55°C or 65°C Average Winding Rise, Appendix to C57.12.20 Standards*

The following parts of this NEMA Publication No. TR 1 shall apply for distribution transformers:

Part 0 General
Part 6 Terminology
Part 7 Test Code
Part 12 Underground-type Three-phase Distribution Transformers

NEMA Standard 11-20-1980.

* Copies of American National Standards are available from the American National Standards Institute, Inc., 1430 Broadway, New York, New York, 10018.

Copyright National Electrical Manufacturers Association
Provided by IHS under license with NEMA
No reproduction or networking permitted without license from IHS
Not for Resale

TR 1-2.01 DESIGN TEST FOR ENCLOSURE SECURITY OF PADMOUNTED COMPARTMENTAL TRANSFORMERS

This standard provides a means for evaluating the security of enclosures for transformers conforming to the following American National Standards:

C57.12.21-1980* *Requirements for Pad-Mounted, Compartmental-Type, Self-Cooled, Single-Phase Distribution Transformers with High-Voltage Bushings; High-Voltage, 34 500 GrdY/19 920 Volts and Below; Low-Voltage, 240/120 Volts; 167 kVA and Smaller*

C57.12.22-1980* *Requirements for Pad-Mounted, Compartmental-Type, Self-Cooled, Three-Phase Distribution Transformers with High-Voltage Bushings; High-Voltage, 34 500 GrdY/19920 Volts and Below; 2500 kVA and Smaller*

C57.12.25-1980* *Requirements for Pad-Mounted, Compartmental-Type, Self-Cooled, Single-Phase Distribution Transformers with Separable Insulated High-Voltage Connectors: High-Voltage 34500 GrdY/19920 Volts and Below: Low-Voltage 240/120 Volts; 167 kVA and Smaller*

C57.12.26-1975* *Pad-Mounted Compartmental-Type Self-Cooled, Three-Phase Distribution Transformers for use with Separable High-Voltage Connectors (High-Voltage 24940 GrdY/14400 Volts and Below: 2500 kVA and Smaller)*

A. Definitions

1. ***Padmounted Transformers.*** Padmounted transformers are typically located outdoors at ground level where the general public has direct contact with the exterior surfaces of the unit. The general construction of this equipment shall be such that authorized personnel may obtain access to the apparatus inside the transformer compartment. This entry procedure shall consist of opening the locking means, followed by the opening of hinged or lift off door(s), or the complete compartment. No externally removable bolts, screws, hinges, or types of fastenings shall be provided except those associated with the locking means, i.e., pentahead bolts, etc.

2. ***Enclosure Security.*** The transformer compartment and its assembly to the transformer tank, when tested according to the procedures of par. C, shall resist the entry of the defined probing wire.

3. ***Axial Force.*** A force applied along the axis of the pry bar from its handle to its pry tip.

4. ***Prying Leverage.*** A force at right angles to the handle times the distance from this force to the point of insertion of the pry tip into a joint, crevice, etc., of the enclosure.

B. Test Equipment

The tests for enclosure security shall be conducted with the following equipment:

1. *The pry bar*, constructed according to Fig. 1, is used for the pry tests. The pry bar consists of the specified pry tip welded to a pry bar. The handle is mounted so it can only slide in an axial direction restrained by a stack of Belleville washers. The forces described below shall be applied to the handle.

a. When an axial force is applied to the handle the stack of Belleville washers is compressed. The amount of compression is a measure of the magnitude of the axial force applied. Using a scale or other force-measuring device, the pry bar shall be calibrated to measure the axial force used to force the tip into the joint under test.

b. The prying leverage applied can be measured indirectly by measuring the deflection of the pry bar. The dial indicator is mounted on the pry bar and set to measure deflection of a certain length of the bar. A calibration can be made which will result in a table or curve showing prying leverage versus reading of the dial indicator.

2. *The pull bar* shown in Fig. 2 shall be used in the pull tests. The pulling means is designed to measure the axial pull in pounds and is constructed in accordance with Fig. 2.

3. *The probing wire* is bare number 10 AWG harddrawn solid copper wire 10 feet long.

C. Tests

1. ***General.*** The completely assembled padmounted compartment and tank are mounted on a flat surface according to the manufacturer's specification. With the compartment closed and locked, the following sequence of tests shall be performed:

(1) Pry tests
(2) Wire probe tests
(3) Pull tests
(4) Wire probe tests
(5) Operation test

* Copies of American National Standards are available from the American National Standards Institute, Inc., 1430 Broadway, New York, New York 10018.

Copyright National Electrical Manufacturers Association
Provided by IHS under license with NEMA
No reproduction or networking permitted without license from IHS
Not for Resale

Copyright National Electrical Manufacturers Association
Provided by IHS under license with NEMA
No reproduction or networking permitted without license from IHS
Not for Resale

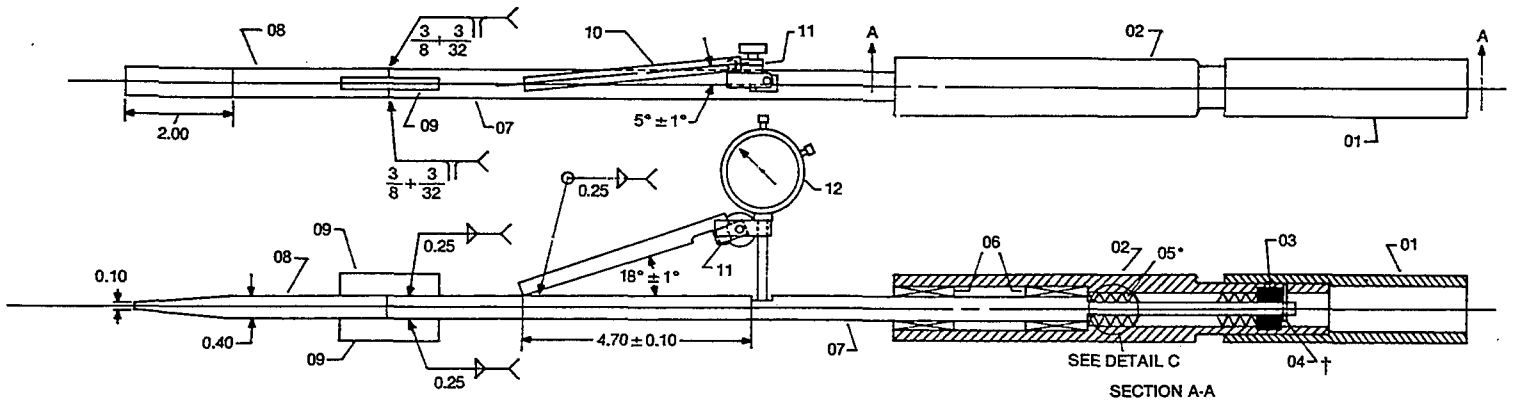

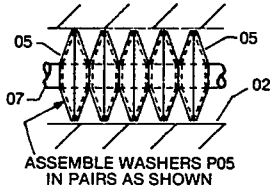

DETAIL C

All dimensions are in inches unless otherwise indicated.
* Quantity of P05 shall be permitted to vary from 90 to 100.
† P04 must extend into slot to restrict turning motion of P07.

BILL OF MATERIALS

PART NO.	NAME	QTY.	DESCRIPTION
01	HANDLE	1	
02	SPG HSG	1	
03	SPG HSG	1	
04	ROLL PIN	1	STL .093 OD x .750 LG
05	SPG WASH	100 *	BELLEVILLE CAT# IB0500-022
06	BALL BSH	2	THOMPSON BALL BSH CAT# A-81420
07	SHAFT	1	
08	CHISEL	1	1/2 IN CAT# 9253 JC PENNEY CO. (OR EQ)
09	WELD PAD	2	
10	HOLD ROD	1	BROWN & SHARPE CAT# 599-7900
11	SLIDE SWVL	1	BROWN & SHARPE CAT# 599-7906
12	TORQUE IND	1	BROWN & SHARPE CAT# 8241-942

CALIBRATION INSTRUCTION:

BEFORE THE PRY (TEST) BAR CAN BE USED TO MEASURE THE AXIAL AND PRYING LEVERAGE FORCES DESCRIBED IN THE STANDARD, THE BAR MUST BE CALIBRATED.

THIS CALIBRATION IS ACCOMPLISHED FOR THE AXIAL FORCE BY APPLYING STANDARD FORCES AT THE END OF THE HANDLE PART 01 AND MARKING THE COMPRESSION OF THE PRY BAR HANDLE ALONG THE PRY BAR SHAFT PART 07.

NEXT THE PRYING LEVERAGE MUST BE CALIBRATED BY HOLDING THE PRY BAR TIP PART 08 IN PLACE AND APPLYING A STANDARD FORCE ON THE HANDLE PART 02. THE DEFLECTION OF THE DIAL INDICATOR PART 12 IS RECORDED FOR STEPS IN FORCE ON THE HANDLE. THE RESULTS CAN BE USED TO DEVELOP CALIBRATION CURVE, DEFLECTION VERSUS PRYING LEVERAGE. WHEN THE PRY BAR IS USED IN A TEST, THE CALIBRATION CURVE IS USED TO DETERMINE THE INCH POUNDS OF FORCE.

Fig. 1
PRY TEST BAR

(Continued)

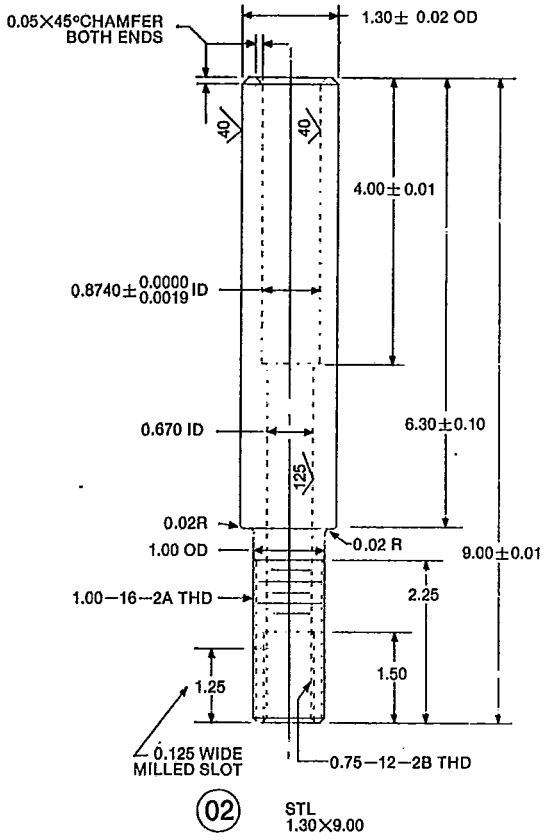

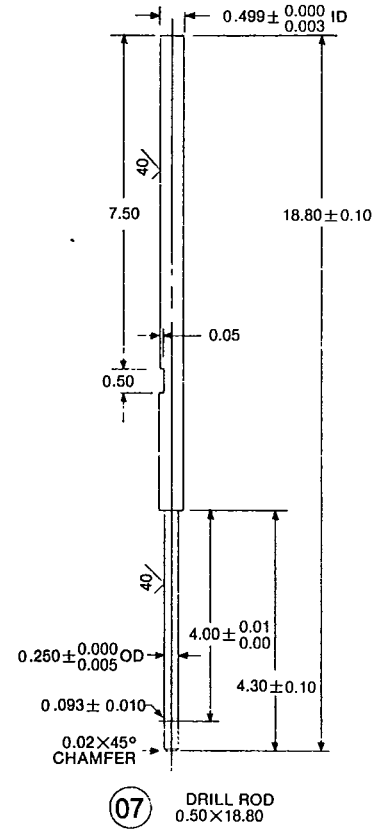

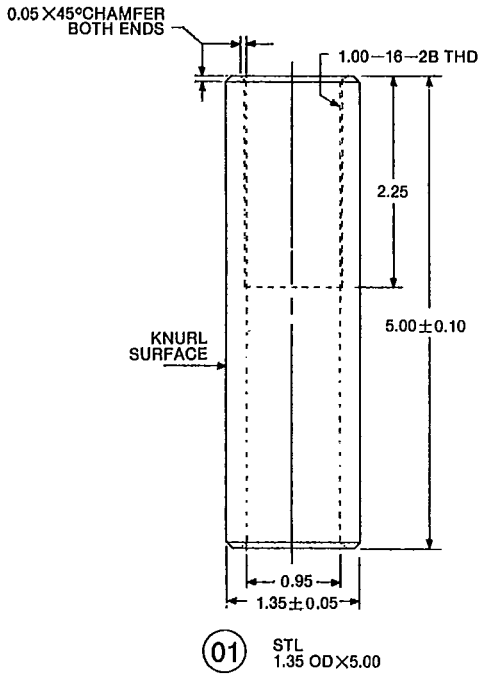

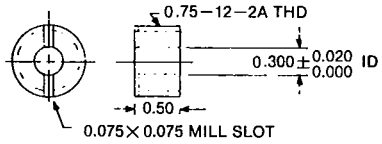

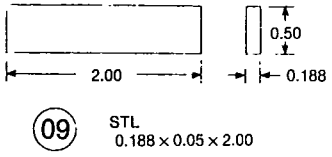

Fig. 1 (cont.)
PRY TEST BAR

All dimensions are in inches unless otherwise indicated.

Copyright National Electrical Manufacturers Association
Provided by IHS under license with NEMA
No reproduction or networking permitted without license from IHS
Not for Resale

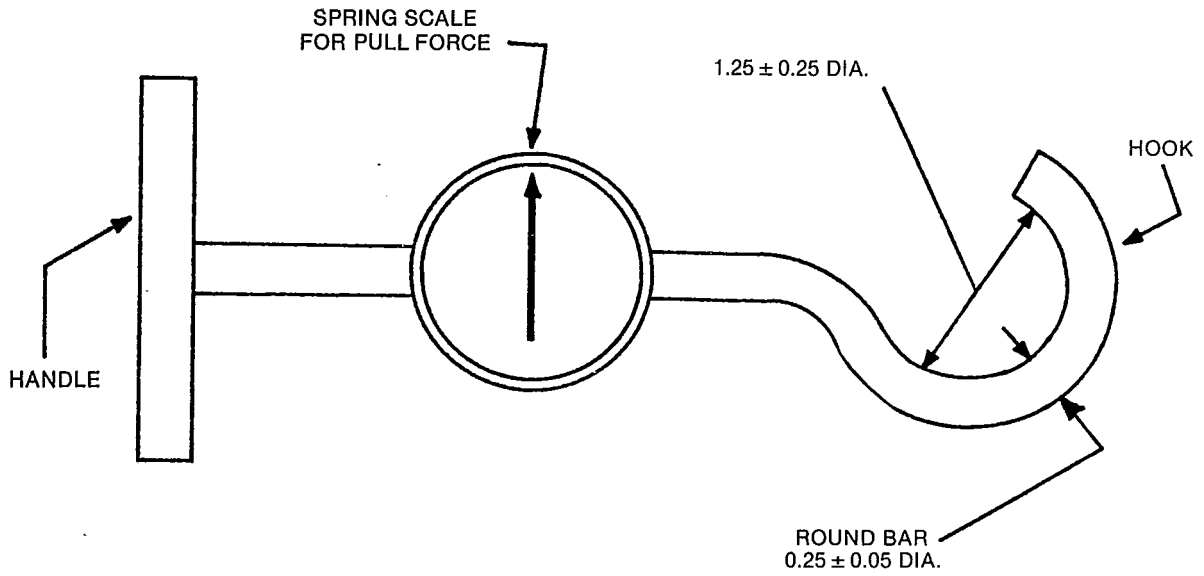

TYPICAL DEVICE
IRON MAN SCALES
NO. 1756T4
CAPACITY—200 LBS.

All dimensions in inches.

Fig. 2
PULL HOOK

Copyright National Electrical Manufacturers Association
Provided by IHS under license with NEMA
No reproduction or networking permitted without license from IHS
Not for Resale

2. ***Pry Tests.*** The pry bar shall be used on all joints, crevices, hinges, locking means, etc., that exist between the compartment components, i.e., doors, sills, etc. The pry bar shall be permitted to be placed at any angle to the compartment surface. The tip of the bar shall first be inserted in the opening being tested using the value of axial force specified in Table 1. Then, with that axial force being maintained, the prying force specified in Table 1 shall be applied. This force shall be applied alternatively first in one direction and then in the opposite direction (once in each direction). Application of either or both axial and prying force shall be maintained so long as relaxation is occurring in the compartment assembly. When relaxation ceases, or if no relaxation occurs, the pry bar shall be removed and applied at an untested location.

3. ***Pull Tests.*** A pulling force shall be applied to all handles and other parts which can be engaged by the pulling hook. A pulling force not exceeding the values in Table 1 shall be permitted to be exerted at any angle to the compartment surface. This force is to be maintained during any relaxation of the compartment assembly. When relaxation ceases, or if no relaxation occurs, the pull test shall be terminated. The hook shall then be inserted into any other handle or other part which it can engage, and the test shall be repeated. Any handle or part shall be tested only once.

4. ***Wire Probe Tests.*** Following the pry and pull tests described in pars. 2 and 3, the compartment shall be penetrated with the probe wire. This penetration shall be permitted to be tried at any compartment crevice or joint. The wire shall be straight with no prebends and shall be gripped by the tester with his bare hands. If the wire enters the joint the wire shall be continually pushed until either it can no longer be pushed or it has entered the compartment. This test is passed if an inspection determines the probing wire either has not entered the compartment, or if visible, the probing wire is restricted by a barrier from intrusion into the enclosure's interior.

5. ***Operation Test.*** Following the above test, the enclosure shall be easily unlocked and opened and shall also be easily closed and locked without loss of security.

D. Test Values

The minimum test values for which entry shall be prevented are provided in Table 1 below:

Table 1
TEST VALUES

Inward Axial Force	50 pounds
Prying Leverage Tests	300 inch/pounds
Pull Test	100 pounds

NEMA Standard 11-20-1980.

TR 1-2.02 DESIGN TESTS FOR FAULT CURRENT CAPABILITY OF OVERHEAD DISTRIBUTION TRANSFORMER ENCLOSURES

This test procedure has been designed to determine the ability of an overhead transformer tank or enclosure to withstand a shock or impulse-type application of internal pressure.

It is recognized that the test conditions must ultimately be described in terms of the energy applied, with the pressure wave defined by the rate of rise, peak pressure, duration, and total energy under the curve. However, at this time sufficient information is not available to so describe an applicable pressure wave. For the interim period until such knowledge is available, this test procedure is based upon defining the electrical conditions associated with generating a particular shock or impulse pressure wave which may be used as a measure of tank or enclosure strength.

This test procedure is not intended to include all possible conditions that may occur in service under fault conditions but, rather to establish a meaningful test which is repeatable and capable of duplication in various laboratories and test situations.

The test is intended as a design test to be made on new transformer tanks with a new tank assembly subjected to no more than two faults or pressure shots.

This test procedure covers a suggested revision of the American National Standard *Requirements for Overhead-type Distribution Transformers,* C57.12.20-1980*.

Some faults can quickly develop high pressures in the transformer enclosure. The rate of pressure rise and the ultimate tank pressure may vary for different faults. These design tests are to be made on transformer enclosures to demonstrate their capability to withstand pressure changes due to specified faults.

Authorized Engineering Information 11-20-1980.

A. Definitions

1. ***Enclosures.*** The complete transformer housing, tank, cover, band, etc., that contains the oil, the core and coil, the accessories, etc., of an overhead-type distribution transformer.

2. ***Internal Fusible Element.*** An expulsion fuse that operates in the transformer oil.

* Copies of American National Standards are available from the American National Standards Institute, Inc., 1430 Broadway, New York, New York 10018.

Copyright National Electrical Manufacturers Association
Provided by IHS under license with NEMA
No reproduction or networking permitted without license from IHS
Not for Resale

3. ***Back-up Protection.*** Devices external to the transformer enclosure to limit the duration or the potential duration of the flow of current to a fault.

4. ***A Test.*** Two faults in a given enclosure.

5. ***A Fault.*** An electrical condition designed to draw a specified value of current.

B. General Requirements

The transformer to be tested shall be a new unit, complete with its core and coil, bushings, etc. The test shall be conducted at ambient temperature with an initial internal pressure of from 6 to 7 psig. The transformer being tested shall be securely supported by its hanger brackets and mounted clear of the earth. The testing requirements of American National Standards C37.40-1969 and C37.41-1969 shall be followed. The fault current shall be symmetrical.

A new enclosure shall be used for each test. A test shall consist of two faults. The second fault shall be accomplished by reusing "as specified by the manufacturer" all of the original components in the enclosure. Provision shall be made for venting in a safe manner any internal pressure which remains after each fault.

If specified, the manufacturer shall provide a test report. This report shall describe tests on representative production samples of each enclosure diameter with its minimum designed air space.

C. Tests

Two tests are covered in this standard.

Test No. 1 with a high current arcing fault, without internal fusible element, shall be conducted on each enclosure diameter with its minimum designed air space. The minimum designed air space must consider production tolerances.

In addition, Test No. 2, with an internal fusible element, shall be conducted on each enclosure diameter utilizing the internal fusible elements. This test covers the interruption of these fusible elements for both rated interrupting and the lower fault value of current, as defined in par. E.

NEMA Standard 11-20-1980.

It is the intent: of this test to utilize the highest energy release fuse element for each enclosure. This is probably the highest interrupting rated fuse element provided for the highest voltage class. The transformer should not have a secondary breaker, or any other secondary protection.

Authorized Engineering Information 11-20-1980.

D. Test No. 1—An Arcing Fault in an Enclosure

1. ***First fault.*** A simulated internal fault shall be provided. This fault shall consist of a 1-inch arc gap mounted horizontally and located 1 inch above the core clamps. This gap shall be bridged initially by an 0.0605-inch diameter or smaller copper wire. The gap shall be connected between the high-voltage terminals or from one high-voltage terminal to ground. The mounting blocks or terminals of the gap shall consist of copper-bearing material and shall have flat surfaces from 1/4 to 3/4 inch in diameter or in width. These gaps shall be designed to maintain this 1-inch arc gap for the duration of the fault. The transformer coil shall not be electrically connected in this test circuit. The power source shall be 7.2 kV and adjusted to supply a current of 8000 rms symmetrical amperes.

As this arcing fault will not be self-clearing, back-up protection shall be provided to clear the circuit in approximately 1/2 to 1 cycle which is a typical clearing time for an external distribution fuse cutout. A cutout with up to a 25K fuse link shall be used to provide back-up protection. A current-limiting device, such as a fuse, cannot be included in the back-up protection.

2. ***Second Fault.*** For the second fault, the fault described in item 1 shall be repeated.

E. Test No. 2—For Enclosures with Internal Fusible Elements

For the tests in items 1 and 2 below, the sequence of faults shall be either A and then B or B and then A.

1. ***"A" Fault.*** The A fault shall be a bolted line-to-ground on the load side of the fusible element. The power source shall apply the rated voltage of the transformer and shall be capable of delivering the rated interrupting current of the fusible element or 8000 rms symmetrical amperes, whichever is less. The transformer coil shall not be electrically connected in this test circuit.

Back-up protection should be provided to clear the fault in approximately two cycles after the total clearing time of the internal fusible element.*

2. ***"B" Fault.*** The B fault shall be applied externally to the enclosure at the low-voltage terminals of the transformer, shorting all low-voltage terminals with the required impedance. The transformer coil shall be electrically connected in this test circuit. This fault should

*This sentence approved as Authorized Engineering Information.

Copyright National Electrical Manufacturers Association
Provided by IHS under license with NEMA
No reproduction or networking permitted without license from IHS
Not for Resale

draw 25 times rated transformer current. For transformers with 4-percent impedance or higher, the current will be limited by the transformer impedance. The power source shall be adjusted to the rated voltage of the transformer. The fault current shall operate the fusible element.

Back-up protection should be provided to clear the fault in approximately two seconds after total clearing time of the internal fusible element.*

F. Test Results

1. No mechanical components from the transformer enclosure shall be propelled or dropped from the tank during the tests. There shall be no rupture of the tank casing or seams.
2. There shall be less than one quart of oil emitted and no expulsion of flaming oil during the tests.
3. No oil shall continue to leave the inside of the transformer enclosure after the completion of the fault.
4. The transformer shall not be dislodged from its mounting.

NEMA Standard 11-20-1980.

*This sentence approved as Authorized Engineering Information.

Copyright National Electrical Manufacturers Association
Provided by IHS under license with NEMA
No reproduction or networking permitted without license from IHS
Not for Resale

Part 3

SECONDARY NETWORK TRANSFORMERS

The American National Standard *Requirements for Secondary Network Transformers, Subway and Vault Types (Liquid Immersed)*, C57.12.40-1975*, (with the exception of paragraphs 5.5.4 and 11.5.2 on finishes) have been approved as NEMA Standards for secondary network transformers and should be inserted in this Part 3.

The following other parts of this NEMA Publication No. TR 1 shall also apply for secondary network transformers:

Part 0 General
Part 6 Terminology
Part 7 Test Code

NEMA Standard 11-20-1980.

* Copies of American National Standards are available from the American National Standards Institute, Inc., 1430 Broadway, New York, New York, 10018.

Copyright National Electrical Manufacturers Association
Provided by IHS under license with NEMA
No reproduction or networking permitted without license from IHS
Not for Resale

Part 4

DRY-TYPE TRANSFORMERS

The following American National Standards have been approved as NEMA Standards for dry-type transformers and should be inserted in this Part 4:

ANSI/IEEE C57.12.01-1979*	*General Requirements for Dry-Type Distribution and Power Transformers*
ANSI/IEEE C57.12.91-1979*	*Test Code for Dry-Type Distribution and Power Transformers*
ANSI C57.12.50-1980*	*Requirements for Ventilated Dry-Type Distribution Transformers, 1 to 500 kVA, Single-Phase; and 15 to 500 kVA, Three-Phase; With High-Voltage 2400-34500 Volts*
ANSI C57.12.51-1980*	*Requirements for Ventilated Dry-Type Power Transformers, 501 kVA and Larger, Three-Phase With High-Voltage 2400-34500 Volts*
ANSI C57.12.52-1980*	*Requirements for Sealed Dry-Type Power Transformers, 501 kVA and Larger, Three-Phase, With High-Voltage 2400-34500 Volts*
ANSI/IEEE C57.94-1980*	*Recommended Practices for Installation Application, Operation and Maintenance of Dry-Type General Purpose Distribution and Power Transformers*
ANSI C57.96-1959*	*Guide for Loading Dry-Type Transformers, Appendix to C57.12 Standards*

NEMA Standard 11-20-1980.

* Copies of American National Standards are available from the American National Standards Institute, Inc., 1430 Broadway, New York, New York 10018.

Copyright National Electrical Manufacturers Association
Provided by IHS under license with NEMA
No reproduction or networking permitted without license from IHS
Not for Resale

Part 5

UNIT SUBSTATION TRANSFORMERS

The applicable portions of the NEMA Standards Publication for *Primary Unit Substations,* 201-1970 (R 1976), and the NEMA Standards Publication for *Secondary Unit Substations,* 210-1970 (R 1976), have been approved as NEMA Standards for unit substation transformers and should be inserted in this Part 5. Each of these books is available from NEMA.

The following other parts of this NEMA Publication No. TR 1 shall also apply for unit substation transformers.

Part 0 General
Part 6 Terminology
Part 7 Test Code

NEMA Standard 11-12-1970.

Copyright National Electrical Manufacturers Association
Provided by IHS under license with NEMA
No reproduction or networking permitted without license from IHS

Not for Resale

Part 6

TERMINOLOGY

The American National Standard, *Terminology for Power and Distribution Transformers* ANSI/IEEE C57.12.80-1978*, has been approved as a NEMA Standard for terminology and should be inserted in this Part 6.

NEMA Standard 11-20-1980.

* Copies of American National Standards are available from the American National Standards Institute, Inc., 1430 Broadway, New York, NY 10018.

Copyright National Electrical Manufacturers Association
Provided by IHS under license with NEMA
No reproduction or networking permitted without license from IHS

Not for Resale

Part 7

TEST CODE

The American National Standard *Test Code for Liquid-Immersed Distribution, Power and Regulating Transformers*, ANSI/IEEE C57.12.90-1980*, has been approved as a NEMA Standard for transformer tests and should be inserted in this Part 7.

The American National Standard *Test Code for Dry-Type Distribution and Power Transformers*, ANSI/IEEE C57.12.91-1979*, has been approved as a NEMA Standard and should be inserted in this Part 7.

The NEMA Standards on the following pages (see Part 7 Pages 1-2) shall also apply for transformer tests.

NEMA Standard 11-20-1980.

The American National Standard *Guide for Transformer Impulse Tests*, ANSI/IEEE C57.98-1969*, should be inserted in this Part 7.

Authorized Engineering Information 11-20-1980.

* Copies of American National Standards are available from the American National Standards Institute, Inc., 1430 Broadway, New York, NY 10018.

Copyright National Electrical Manufacturers Association
Provided by IHS under license with NEMA
No reproduction or networking permitted without license from IHS

Not for Resale

TR 1-7.01 TEST CODE FOR MEASUREMENT OF RADIO INFLUENCE VOLTAGE LEVELS

A. Apparatus

The apparatus to be tested under this code can be divided into two general classes as follows:

Class 1 – Potential-type transformer apparatus, such as transformers for step-up, step-down or interconnected service, and some arrangements of regulating transformers and autotransformers.

Class 2 – Series-type transformer apparatus, such as series transformers, shunt (iron core) reactors, current-limiting reactors and some arrangements of regulating transformers and auto-transformers.

B. Equipment

The equipment and general method used in determining the radio influence voltage shall be in accordance with the NEMA Standards Publication *Methods of Measurement of Radio Influence Voltage (RIV) of High-voltage Apparatus,* 107-1964 (R 1971, 1976). For an alternate method, see par. E, Use of Bushing Capacitance Tap.

C. Connections for Testing—Class A-1 Apparatus

The test voltage shall preferably be impressed across the winding under test (see Fig. 7-1). It may, however, be induced from a winding other than that being tested (see Fig. 7-2)*. In order that the results be comparable, the circuit arrangements and constants must be as shown in Fig. 7-1 or 7-2. The winding shall be tested first with one end grounded and then with the other end grounded.

The test on a reduced-voltage neutral terminal shall correspond to the insulation class of the neutral. Windings with one end solidly grounded obviously will receive no test on the grounded end.

One terminal of each winding not under test, the ground terminal if one is available, shall be connected to the tank and ground.

D. Connections for Testing—Class A-2 Apparatus

The test voltage shall be applied to the winding under test, with all terminals of the winding under test tied together (see Fig. 7-3).

E. Use of Bushing Capacitance Tap

If radio influence voltage is measured at the capacitance tap of the bushing, a suitable device shall be used which can be tuned with the bushing tap to ground capacitance at the measuring frequency. This device shall constitute all circuit elements from the capacitance tap of the bushing to the radio noise meter.

NEMA Standard 11-20-1980.

The coaxial cable, an element of the device, may be any suitable impedance and need not be terminated in its characteristic impedance. The purpose of the device is to minimize the dividing effect of the bushing capacitance and to convey the radio influence voltage to the radio noise meter with minimum attenuation. See Figs. 7-4 and 7-5.

Authorized Engineering Information 11-20-1980.

F. Calibration for Circuits Using Bushing Capacitance Tap

The calibration ratio will be determined by:

1. Applying to the terminal under test the output of a sine-wave signal generator at approximately 100 microvolts and at the measuring frequency, or that of a pulse signal generator at approximately 100 microvolts.
2. Measuring the voltage on the terminal with the radio noise meter connected directly to the terminal.
3. Measuring, with the same radio noise meter, the voltage appearing in the test circuit at the location where the radio noise meter will be connected during the radio influence voltage measurement on the transformer (a second radio noise meter shall be permitted to be used instead, provided its relationship to the first radio noise meter has been established).
4. It shall be established that this calibration ratio remains valid over the radio influence voltage range of interest.

The ratio of the voltage measured with the radio noise meter at the terminal to the voltage measured with the radio noise meter at the normal location in the circuit which has been selected for the corona test on the transformer will be applied as a correction factor to the radio influence voltage reading obtained during the corona test to determine the actual radio influence voltage at the terminal of the winding under test.

G. Test Voltage

The test voltage shall be determined from the preferred nominal system voltage in accordance with TR 1-0.04 in Part 0, except that the test voltage shall not exceed 110 percent of the rated voltage of the winding on the highest tap connection.

NEMA Standard 11-20-1980.

H. Precautions in Making Tests

The following precautions should be observed in measuring the radio influence voltage:

*This sentence approved as Authorized Engineering Information.

Copyright National Electrical Manufacturers Association
Provided by IHS under license with NEMA
No reproduction or networking permitted without license from IHS
Not for Resale

1. The apparatus should be tested at approximately the same temperature as the room in which the tests are made.

2. The apparatus should be so located as to provide the outside clearances recommended.

Authorized Engineering Information 11-20-1980.

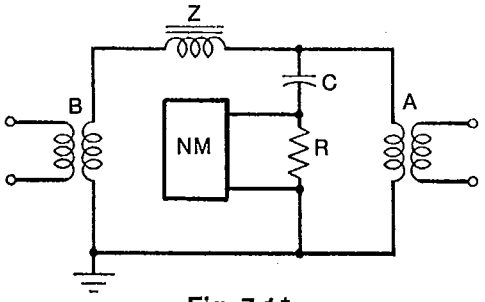

Fig. 7-1*

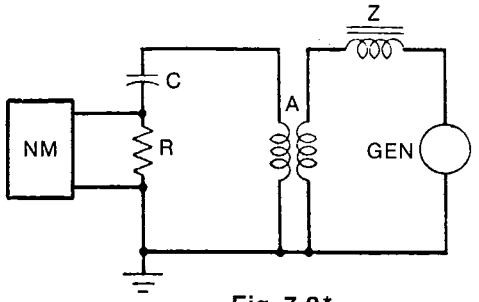

Fig. 7-2*

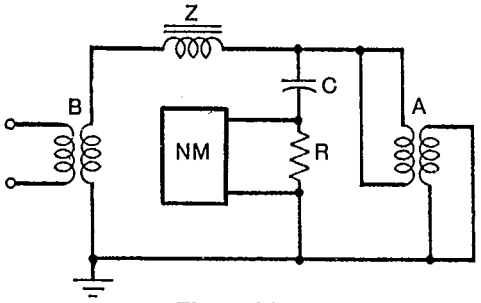

Fig. 7-3*

A -Transformer under test
B -Testing transformer
C -Coupling capacitor
NM-Radio noise meter
R -Terminating resistance
Z -Radio frequency choke

* Values for radio circuit elements and detailed connections shall conform to the NEMA Standards Publication *Methods of Measurement of Radio Influence Voltage (RIV) of High-voltage Apparatus,* 107-1964 (R 1971, 1976).

TEST CIRCUITS FOR RADIO INFLUENCE MEASUREMENTS USING THE BUSHING CAPACITANCE TAP:

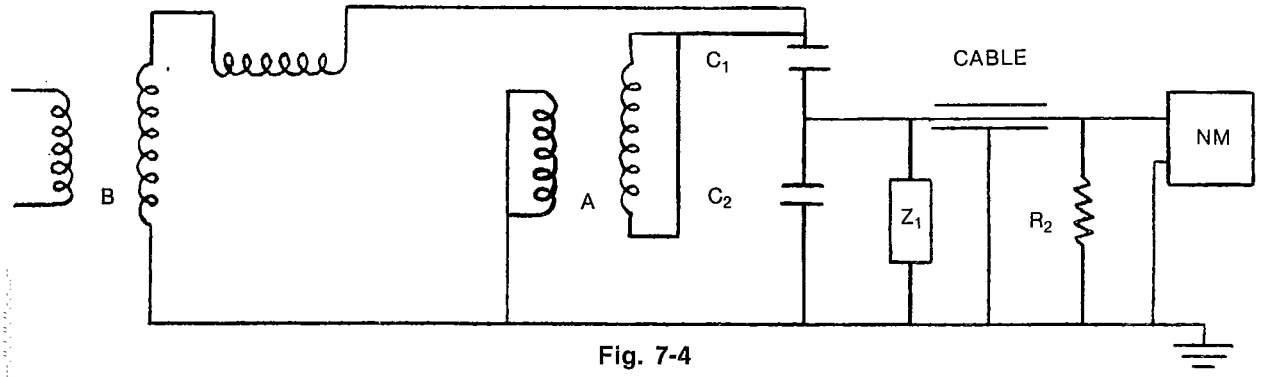

Fig. 7-4

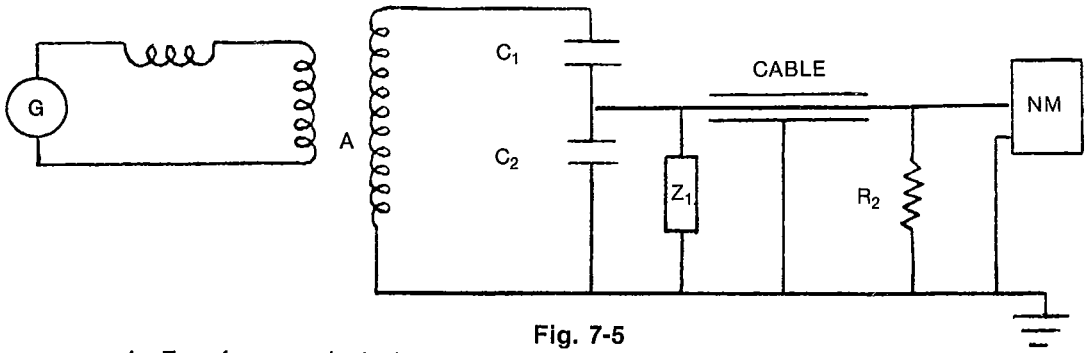

Fig. 7-5

A -Transformer under test
B -Testing transformer
C_1-High-voltage bushing capacitance
C_2-High-voltage bushing capacitance tap

CABLE-Shielded cable
Z_1 -Variable inductance
R_2 -Resistor
NM -Radio noise meter

Copyright National Electrical Manufacturers Association
Provided by IHS under license with NEMA
No reproduction or networking permitted without license from IHS

Not for Resale

TR 1-7.02 TRANSFORMER TEST REPORT

To facilitate safe and effective operation of transformers it is recommended that the following information be included in the test report:

Manufacturer's Name _____

Purchaser _____

Date of Test _____ Purchaser's Order No. _____ Mfr.'s Ref. No. _____

Cooling Class _____ Phase _____ Hertz _____ Insulating Fluid _____

Winding (1) _____ Volts _____ kVA (2) _____ Volts _____ kVA (3) _____ Volts _____ kVA

Taps _____

RESISTANCE, EXCITING CURRENT, LOSSES AND IMPEDANCE—Based on normal rating unless otherwise stated. Losses and regulation are based on wattmeter measurements. For three-phase transformers the resistances given are the sum of the three phases in series.

Serial No.	Resistance in Ohms at 85°C			Exciting Current Percent at 100% Voltage	No Load Loss In Watts 100% Voltage	Watts Loss and Impedance at 85°C					
						_____V to _____V _____ kVA		_____V to _____V _____ kVA		_____V to _____V _____ kVA	
	(1)	(2)	(3)			Load Loss	% Imp.	Load Loss	% Imp.	Load Loss	% Imp.
						Total Loss		Total Loss		Total Loss	
Average											
Guarantee											

TEMPERATURE RISES are in degrees C corrected to instant shutdown.

Serial No _____ with windings connected and loaded as follows:

Multi-winding transformer heat run connections for the determination of the maximum winding rises over ambient may not be the same as that for the maximum losses which produce the maximum fluid rise. Such temperature rise entries shall be on separate lines in the Temperature Rise table of the Test Report Form. Precautions should be taken to assure that the fluid temperature rise and winding rises entered on a common line correspond to the same test conditions.

Cool Mode	Temp. Rise Guar. °C	Fluid R. Above Amb.			Winding Differential Above Average Fluid							
					Energized Winding		Shorted Winding		Rise by Res. °C			
		Losses Dissipated	Top °C	Ave. °C	Tap-kV	Amps	Tap-kV	Amps	(1)	(2)	(3)	

DIELECTRIC TESTS—If Impulse Tests are required, see separate Transformer Impulse Test Report.

		Voltage Rating of Winding Tested	Test Voltage Applied	Duration of Test in Seconds
APPLIED POTENTIAL TESTS Voltage applied between each winding and all other windings connected to core and ground.				
INDUCED POTENTIAL TESTS	_____ hertz for _____ cycles	_____ times rated voltage across full winding _____ kV from _____ kV line terminal to ground		

REMARKS:

I hereby certify this is a true report based on factory tests made in accordance with the Transformer Test Code C57.12.90 current edition of the American National Standards Institute, and that each Transformer withstood the above insulation tests.

Signed _____ Date _____ Approved by _____

Transformer Engineering Dept.

Authorized Engineering Information 11-20-1980.

Copyright National Electrical Manufacturers Association
Provided by IHS under license with NEMA
No reproduction or networking permitted without license from IHS
Not for Resale

TR 1-7.03 TRANSFORMER IMPULSE TEST REPORT

To facilitate safe and effective operation of transformers it is recommended that the following information be included in the test report:

Manufacturer's Name _____

Purchaser _____

Date of Test _____ **Purchaser's Order No.** _____ **Mfr.'s References** _____

Type _____ **Phase** _____ **Cycles** _____ **Insulating Fluid** _____

H-winding _____ **Volts** **X-winding** _____ **Volts** **Y-winding** _____ **Volts**

Serial No.	Oscillograms	Test*	Surge Applied on Terminal No.	kV Required	kV Applied	Microsecond to Crest	Microsecond to Flashover

***RFW-Reduced Full Wave** ***CW-Chopped Wave** ***FW-Full Wave**

REMARKS:

Signed _____ **Date** _____ **Approved** _____
Transformer Engineering Dept.

Page _____ **of** _____ **Pages**

Authorized Engineering Information 11-12-1953.

Copyright National Electrical Manufacturers Association
Provided by IHS under license with NEMA
No reproduction or networking permitted without license from IHS
Not for Resale

TR 1-7.04 REACTOR TEST REPORT

To facilitate safe and effective operation of reactors it is recommended that the following information be included in the test report:

Manufacturer's Name _____

Purchaser _____

Date of Tests _____ **Purchaser's Order No.** _____ **Mfr.'s Ref. No.** _____

Type _____ **Phase** _____ **Cycles** _____ **Insulating Fluid** _____

Volts Drop _____ **kVA** _____ **Amperes** _____

For connection in _____ **Volt Circuit** _____

RESISTANCES, LOSSES AND IMPEDANCE are based on normal rating, unless otherwise stated. Losses are based on wattmeter measurements.

Serial No.	Resistance at 85°C			Total Loss Watts 85°C	Impedance	
	Phase A	Phase B	Phase C		Volts	%
Average						
Guarantee						

TEMPERATURE RISE in degrees C corrected to instant of shutdown.

Serial No.	Amperes	Rise by Resistance	Guarantee

INSULATION TESTS—high-potential tests were made on each reactor. Voltage was applied between winding and ground and between phases of a polyphase reactor. Voltage at high frequency was induced in each winding to test the turn-to-turn strength.

Voltage Rating of Winding	Applied Voltage at Normal Frequency	Induced Voltage at High Frequency

REMARKS:

Signed _____ **Date** _____ **Approved** _____

Authorized Engineering Information 11-20-1980.

Copyright National Electrical Manufacturers Association
Provided by IHS under license with NEMA
No reproduction or networking permitted without license from IHS

Not for Resale

Part 8

TRANSMISSION AND DISTRIBUTION VOLTAGE REGULATORS

The American National Standard *Requirements, Terminology and Test Code for Step-Voltage and Induction-Voltage Regulators,* C57.15-1968*, have been approved as NEMA Standards for transmission and distribution voltage regulators and should be inserted in this Part 8.

NEMA Standard 11-12-1970.

The American National Standard *Guide for Loading Oil-Immersed Step-Voltage and Induction-Voltage Regulators,* C57.95-1955*, Appendix to C57.15, has been approved as NEMA Standard for transmission and distribution voltage regulators and should be inserted in this Part 8.

NEMA Standard 11-20-1980.

* Copies of American National Standards are available from the American National Standards Institute, Inc., 1430 Broadway, New York, New York 10018.

Copyright National Electrical Manufacturers Association
Provided by IHS under license with NEMA
No reproduction or networking permitted without license from IHS

Not for Resale

Part 9

CURRENT-LIMITING REACTORS

The American National Standard *Terminology and Test Code for Current-Limiting Reactors,* C57.16-1958 (R 1971)*, has been approved as a NEMA Standard and should be inserted in this Part 9.

The American National Standard *Guide for Loading Dry-Type and Oil-Immersed Current-Limiting Reactors, Appendix to C57.16 Standards,* C57.99-1965*, has been approved as a NEMA Standard and should be inserted in this Part 9.

NEMA Standard 11-20-1980.

* Copies of American National Standards are available from the American National Standards Institute, Inc., 1430 Broadway, New York, New York, 10018.

Copyright National Electrical Manufacturers Association
Provided by IHS under license with NEMA
No reproduction or networking permitted without license from IHS
Not for Resale

Part 10

ARC FURNACE TRANSFORMERS

The American National Standard *Requirements for Arc Furnace Transformers,* C57.17-1965 (R 1978)*, with the exception of paragraph 8.4.2 on paint colors for tank finishes, have been approved as NEMA Standards for arc furnace transformers and should be inserted in this Part 10.

The following other parts of this NEMA Publication No. TR 1 shall also apply for arc furnace transformers:

Part 0 General
Part 6 Terminology
Part 7 Test Code

NEMA Standard 11-20-1980.

* Copies of American National Standards are available from the American National Standards Institute, Inc., 1430 Broadway, New York, New York 10018.

Copyright National Electrical Manufacturers Association
Provided by IHS under license with NEMA
No reproduction or networking permitted without license from IHS

Not for Resale

Part 11

SHUNT REACTORS

The American National Standard *Requirements, Terminology and Test Code for Shunt Reactors Rated Over 500 kVA,* C57.21-1980*, has been approved by NEMA and should be inserted in this Part 11.

NEMA Standard 11-20-1980.

* Copies of American National Standards are available from the American National Standards Institute, Inc., 1430 Broadway, New York, New York 10018.

Copyright National Electrical Manufacturers Association
Provided by IHS under license with NEMA
No reproduction or networking permitted without license from IHS

Not for Resale

Part 12

UNDERGROUND-TYPE THREE-PHASE DISTRIBUTION TRANSFORMERS

The American National Standard *Requirements for Underground-type Three-phase Distribution Transformers,* C57.12.24-1978*, has been approved by NEMA. It should be inserted in this Part 12.

NEMA Standard 11-20-1980.

The following other parts of this NEMA Publication No. TR 1 shall also apply for these distribution transformers:

Part 0 General
Part 6 Terminology
Part 7 Test Code

NEMA Standard 11-8-1973.

* Copies of American National Standards are available from the American National Standards Institute, Inc., 1430 Broadway, New York, New York 10018.

Copyright National Electrical Manufacturers Association
Provided by IHS under license with NEMA
No reproduction or networking permitted without license from IHS
Not for Resale

September 1984

NEMA STANDARDIZATION

The purpose of NEMA Standards, their classification and status are set forth in certain clauses of the NEMA Bylaws, which are quoted below:

Purpose of Standards

National Electrical Manufacturers Association Standards are adopted in the public interest and are designed to eliminate misunderstandings between the manufacturer and the purchaser and to assist the purchaser in selecting and obtaining the proper product for its particular need. Existence of a National Electrical Manufacturers Association Standard does not in any respect preclude any member or nonmember from manufacturing or selling products not conforming to the standard.

(Bylaw—Art. V, Sec. 1)

Definition of a Standard

A standard of the National Electrical Manufacturers Association defines a product, process or procedure with reference to one or more of the following: nomenclature, composition, construction, dimensions, tolerances, safety, operating characteristics, performance, rating, testing, and the service for which they are designed.

(Bylaw—Art. V, Sec. 2, Subsection A)

Dimensions

Where dimensions are given for interchangeability purposes, alternate dimensions satisfying the other provisions of the standards publication may be capable of otherwise equivalent performance.

(NEMA Policy Memorandum 84-2, dated June 7, 1984)

Classes of Standards

National Electrical Manufacturers Association Standards are of two classes:

1. NEMA Standard, which relates to a product commercially standardized and subject to repetitive manufacture, which standard has been approved by at least 90 percent of the members of the Subdivision eligible to vote thereon;
2. Suggested Standard for Future Design, which may not have been regularly applied to a commercial product, but which suggests a sound engineering approach to future development, which standard has been approved by at least two-thirds of the members of the Subdivision eligible to vote thereon.

(Bylaw—Art. V, Sec. 2, Subsection B)

Authorized Engineering Information

Authorized Engineering Information consists of explanatory data and other engineering information of an informative character not falling within the classification of NEMA Standard or Suggested Standard for Future Design.

(Bylaw—Art. V, Sec. 6, 1st Sentence)

Official Standards Proposal

An Official Standards Proposal is an official draft of a proposed standard which is formally recommended to an outside organization(s) for consideration, comment and/or approval.

(Bylaw—Art. V, Sec. 4, Subsection A)

Identification of Status

Standards in NEMA Standards Publications are identified in the foreword or following each standard as "NEMA Standard" or "Suggested Standard for Future Design." These indicate the status of the standard. These words are followed by a date which indicates when the standard was adopted in its present form by the Association.

The material identified as "Authorized Engineering Information" and "Official Standards Proposal" is designated similarly.

Copyright National Electrical Manufacturers Association
Provided by IHS under license with NEMA
No reproduction or networking permitted without license from IHS
Not for Resale

TRANSFORMER SECTION
OF THE
NATIONAL ELECTRICAL MANUFACTURERS ASSOCIATION

MEMBER COMPANIES

A.B. Chance Company
Subsidiary of Emerson Electric Company
Centralia, MO 65240

Colt Industries
Central Moloney Transformer Division
Pine Bluff, AR 71601

Dowzer Electric
A Unit of General Signal Corporation
Mt. Vernon, IL 62864

Esco Manufacturing Company
Greenville, TX 75401

Federal Pacific Electric Company
Newark, NJ 07101

Ferranti-Packard, Inc.
Dunkirk, NY 14048

General Electric Company
Pittsfield, MA 01201

Hevi-Duty Electric
A Unit of General Signal
Goldsboro, NC 27530

Copyright National Electrical Manufacturers Association
Provided by IHS under license with NEMA
No reproduction or networking permitted without license from IHS
Not for Resale

Kentucky Association of Electrical
Cooperatives, Inc.
Louisville, KY 40232

McGraw-Edison Power Systems Division
Canonsburg, PA 15317

Niagara Transformer Corporation
Buffalo, NY 14225

Research Service and Engineering, Inc.
Cerritos, CA 90701

Siemens-Allis, Inc.
Gadsden, AL 35903

Uptegraff, R.E., Manufacturing Company
Scottdale, PA 15683

Vantran Electric Corporation
Waco, TX 76710

Westinghouse Electric Corporation
Pittsburgh, PA 15222

Printed in U.S.A.

Copyright National Electrical Manufacturers Association
Provided by IHS under license with NEMA
No reproduction or networking permitted without license from IHS

Not for Resale