NEMA TR*1 93 ■ 6470247 0504681 184 ■

NEMA STANDARDS PUBLICATION NO. TR 1

nema

Transformers Regulators and Reactors

NEMA

NATIONAL ELECTRICAL MANUFACTURERS ASSOCIATION ■ 2101 L STREET, N.W., WASHINGTON, D.C. 20037

Copyright National Electrical Manufacturers Association
Provided by IHS under license with NEMA
No reproduction or networking permitted without license from IHS
Not for Resale

NEMA STANDARDS PUBLICATION NO. TR 1-1993

TRANSFORMERS, REGULATORS AND REACTORS

Published by

National Electrical Manufacturers Association
2101 L Street, N.W.
Washington, DC 20037

©1994 by National Electrical Manufacturers Association

Copyright National Electrical Manufacturers Association
Provided by IHS under license with NEMA
No reproduction or networking permitted without license from IHS
Not for Resale

TABLE OF CONTENTS

		Page
PART 0	GENERAL	1
	Preferred Voltage Ratings	1
	Forced-Air (FA) and Forced-Oil (FOA) Ratings	1
	Performance	2
	Radio Influence Voltage Levels	2
	Power Factor of Insulation of Oil-Immersed Transformers	2
	Audible Sound Levels	2
PART 1	POWER TRANSFORMERS	5
PART 2	DISTRIBUTION TRANSFORMERS	
	Design Test for Enclosure Security of Padmounted Compartmental Transformers	7
PART 3	SECONDARY NETWORK TRANSFORMERS	9
PART 4	DRY-TYPE TRANSFORMERS	11
PART 5	UNIT SUBSTATION TRANSFORMERS	13
PART 6	TERMINOLOGY	15
PART 7	TEST CODE	17
	Test Code for Measurement of Radio Influence Voltage Levels	17
	Transformer Test Report	20
	Transformer Impulse Test Report	21
	Reactor Test Report	22
PART 8	TRANSMISSION AND DISTRIBUTION VOLTAGE REGULATORS	23
PART 9	CURRENT-LIMITING REACTORS	25
PART 10	ARC FURNACE TRANSFORMERS	27
PART 11	SHUNT REACTORS	29
PART 12	UNDERGROUND-TYPE THREE-PHASE DISTRIBUTION TRANSFORMERS	31

Copyright National Electrical Manufacturers Association
Provided by IHS under license with NEMA
No reproduction or networking permitted without license from IHS
Not for Resale

FOREWORD

The standards appearing in this publication have been developed by the Transformer Section and have been approved for publication by the National Electrical Manufacturers Association. They are used by the electrical industry to promote production economies and to assist users in the proper selection of transformers.

The Transformer Section is working actively with the American National Standards Committee, C57, on Transformers, Regulators and Reactors, in the development, correlation and maintenance of national standards for transformers. This Committee operates under the procedures of the American National Standards Institute (ANSI).

It is the policy of the NEMA Transformer Section to remove material from the NEMA Standards Publication as it is adopted and published in the American National Standard C57 series. The NEMA Standards Publication for Transformers, Regulators and Reactors references these and other American National Standards applying to transformers, and is intended to supplement, without duplication, the American National Standards.

The NEMA Standards Publication for Transformers, Regulators and Reactors contains provision for the following:

a. American National Standards adopted by reference and applicable exceptions approved by NEMA, if any.
b. NEMA Official Standards Proposals. These are official drafts of proposed standards developed within NEMA or in cooperation with other interested organizations, for consideration by ANSI. They have a maximum life of five years, during which time they may be approved as American National Standards or adopted as NEMA Standards, or rescinded.
c. Manufacturing Standards. These are NEMA Standards which are primarily of interest to the manufacturers of transformers and which are not yet included in an American National Standard.
d. Standards Which Are Controversial. These are NEMA Standards, on which there is a difference of opinion within Committee C57. The NEMA version will be included in the NEMA Standards Publication until such time as the differences between ANSI and NEMA are resolved.

NEMA Standards Publications are subject to periodic review and take into consideration user input. They are being revised constantly to meet changing economic conditions and technical progress. Users should secure latest editions. Proposed or recommended revisions should be submitted to:

Vice President, Engineering Department
National Electrical Manufacturers Association
2101 L Street, N.W.
Washington, D.C. 20037-1526

SCOPE

This publication provides a list of all ANSI C57 Standards that have been approved by NEMA. In addition it includes certain NEMA Standard test methods, test codes, properties, etc., of liquid-immersed transformers, regulators, and reactors that are not American National Standards.

Copyright National Electrical Manufacturers Association
Provided by IHS under license with NEMA
No reproduction or networking permitted without license from IHS
Not for Resale

PART 0
GENERAL

The following American National Standards have been approved as NEMA Standards and should be inserted in this Part 0:

ANSI/IEEE C57.12.00-1988	*General Requirements for Liquid-Immersed Distribution, Power and Regulating Transformers*
ANSI/IEEE C57.12.01-1989	*General Requirements for Dry Type Power and Distribution Transformers*
ANSI C57.12.10-1988	*Requirements for Transformers 230,000 volts and below, 833/958-8333/10,417 kVA single-phase 750/862-60,000/80,000/100,000 kVA three phase, including supplements*
ANSI C57.12.70-1993	*Terminal Markings and Connections for Distribution and Power Transformers*
ANSI/IEEE C57.12.90-1993	*Test Code for Liquid-immersed Distribution, Power & Regulating Transformers and Guide for Short-Circuit Testing of Distribution & Power Transformers*
ANSI/IEEE C57.19.00-1992	*General Requirements and Test Procedure for Outdoor Apparatus Bushings*
ANSI/IEEE C57.19.01-1992	*Standard Performance Characteristics & Dimensions for Outdoor Apparatus Bushings*
ANSI/IEEE C57.92-1992	*Guide for Loading Mineral-oil-immersed Power Transformers up to and including 100 MVA with 55C or 65C Average Winding Rise*

The NEMA Standards TR 1-0.01 through TR 1-0.09 on the following pages (see Part 0 Pages 1–9) also apply generally to transformers.

0.01 PREFERRED VOLTAGE RATINGS

Preferred system voltages and corresponding transformer voltage ratings are given in the American National Standard for Electric Power Systems and Equipment--Voltage Ratings (60 Hz), C84.1-1989. It is recommended that these ratings be used as a guide in the purchase and operation of transformers.

0.02 FORCED-AIR (FA) AND FORCED-OIL (FOA) RATINGS

Under the conditions of par. 5.11 of American National Standard ANSI/IEEE C57.12.00-1988, the relationship between self-cooled ratings and forced-air-cooled or forced-oil-cooled ratings shall be in accordance with Table 0-1.

Table 0-1
FORCED-AIR AND FORCED-OIL RATINGS RELATIONSHIPS

	Self-cooled Ratings* (kVA)		Percent of Self-Cooled Ratings With Auxiliary Cooling	
Class	Single Phase	Three Phase	First Stage	Second Stage
OA/FA	501-2499	501-2499	115	--
OA/FA	2500-9999	2500-11999	125	--
OA/FA	10000 and above	12000 and above	133-1/3	--
OA/FA/FA	10000 and above	12000 and above	133-1/3	166-2/3
OA/FA/FOA	10000 and above	12000 and above	133-1/3	166-2/3
OA/FOA/FOA	10000 and above	12000 and above	133-1/3	166-2/3

*In the case of multi-winding transformers or autotransformers, the ratings given are the equivalent two-winding ratings.

Copyright National Electrical Manufacturers Association
Provided by IHS under license with NEMA
No reproduction or networking permitted without license from IHS
Not for Resale

PERFORMANCE

0.03 RADIO INFLUENCE VOLTAGE LEVELS

The following values apply to liquid-filled transformers. They do not apply to load tap changing during switching or to operation of auxiliary relays and control switches.

0.03.1 Distribution Transformers

Radio influence voltage levels for distribution transformers, for systems rated 69 kV and less, shall not exceed 100 microvolts when measured in accordance with Section 7.01. The test voltage shall be the line-to-neutral voltage corresponding to 110 percent excitation of the transformer. This will be the coil voltage for wye connections and 1/3 times the coil voltage for delta connections.

0.04 POWER FACTOR OF INSULATION OF OIL-IMMERSED TRANSFORMERS

While the real significance which can be attached to the power factor of oil-immersed transformers is still a matter of opinion, experience has shown that power factor is helpful in assessing the probable conditions of the insulation when good judgement is used.

The proper interpretation of power factor of oil-immersed transformers is being given careful attention by manufacturers in connection with the problems of (1) selecting insulating materials, (2) sealing, and (3) processing the transformers. However, it is the comparative values which are guides for the successful solution for these problems rather than an absolute value of power factor.

The generally accepted factory tests for proving the insulation level are the prescribed low-frequency tests and impulse tests given in the American National Standard C57.12.90-1993.

When required, a factory power-factor test can be made, and this measurement will be of value for comparison with field power-factor measurements to assess the probable condition of the insulation. It is not feasible to establish standard power-factor values for oil-immersed transformers because:

a. Experience has definitely proved that little or no relation exists between power factor and the ability of the transformer to withstand the prescribed dielectric tests.

b. Experience has definitely proved that the variation in power factor with temperature is substantial and erratic so that no single correction curve will fit all cases.

When a factory power-factor measurement of a transformer is required, the measurement should be made with the insulation at room temperature, preferably at or close to 20°C.

0.05 AUDIBLE SOUND LEVELS

Transformers shall be so designed that the average sound level will not exceed the values given in Tables 0-2 through 0-4 when measured at the factory in accordance with the conditions outlined in ANSI/IEEE C57.12.90-1993.

The guaranteed sound levels should continue to be per Tables 0-2 through 0-4 until such time as enough data on measured noise power levels becomes available.

Sound pressure levels are established and published in this document. Sound power may be calculated from sound pressure, using the method described in C57.12.90-1993.

Rectifier, railway, furnace, grounding, mobile and mobile unit substation transformers are not covered by the tables. The tables do not apply during the time that power switches are operating in load-tap-changing transformers and in transformers with integral power switches.

Copyright National Electrical Manufacturers Association
Provided by IHS under license with NEMA
No reproduction or networking permitted without license from IHS

Not for Resale

Copyright National Electrical Manufacturers Association
Provided by IHS under license with NEMA
No reproduction or networking permitted without license from IHS

Table 0-2
AUDIBLE SOUND LEVELS FOR OIL-IMMERSED POWER TRANSFORMERS

Column 1 - Class*OA, Ow and FOW Ratings
Column 2 - Class* FA and FOA First-stage Auxiliary Cooling**†
Column 3 - Straight FOA* Ratings, FA* FOA* Second-stage Auxiliary Cooling*†

Average Sound Level ††, Decibels	Equivalent Two-winding Rating▲																	
	350 kV BIL and Below			450, 550, 650 kV BIL			750 and 825 kV BIL			900 and 1050 kV BIL			1175 kV BIL			1300 kV BIL and Above		
	1	2	3	1	2	3	1	2	3	1	2	3	1	2	3	1	2	3
57	700	...	...	...	...	...	...	...	...	...	...	...	...	...	...	...	...	...
58	1000	...	...	...	...	...	...	...	...	...	...	...	...	...	...	...	...	...
59	–	...	...	700	...	...	...	...	...	...	...	...	...	...	...	...	...	...
60	1500	...	...	1000	...	...	...	...	...	...	...	...	...	...	...	...	...	...
61	2000	...	...	...	...	...	...	...	...	...	...	...	...	...	...	...	...	...
62	2500	...	...	1500	...	...	...	...	...	...	...	...	...	...	...	...	...	...
63	3000	...	...	2000	...	...	...	...	...	...	...	...	...	...	...	...	...	...
64	4000	...	...	2500	...	...	...	...	...	...	...	...	...	...	...	...	...	...
65	5000	...	...	3000	...	...	...	...	...	...	...	...	...	...	...	...	...	...
66	6000	...	...	4000	...	...	3000	...	...	...	...	...	...	...	...	...	...	...
67	7500	6250▲▲	...	5000	3750▲▲	...	4000	3125▲▲	...	...	...	...	...	...	...	...	...	...
68	10000	7500	...	6000	5000	...	5000	3750	...	...	...	...	...	...	...	...	...	...
69	12500	9375	...	7500	6250	...	6000	5000	...	...	...	...	...	...	...	...	...	...
70	15000	12500	...	10000	7500	...	7500	6250	...	...	...	...	...	...	...	...	...	...
71	20000	16667	...	12500	9375	...	10000	7500	...	...	...	...	...	...	...	...	...	...
72	25000	20000	20800	15000	12500	...	12500	9375	...	...	...	...	...	...	...	...	...	...
73	30000	26667	25000	20000	16667	...	15000	12500	...	12500	...	...	...	...	...	...	...	...
74	40000	33333	33333	25000	20000	20800	20000	16667	...	15000	...	...	12500	...	...	...	...	...
75	50000	40000	41667	30000	26667	25000	25000	20000	20800	20000	16667	...	15000	...	...	12500	...	...
76	60000	53333	50000	40000	33333	33333	30000	26667	25000	25000	20000	20800	20000	16667	...	15000	...	...
77	80000	66687	66667	50000	40000	41667	40000	33333	33333	30000	26667	25000	25000	20000	20800	20000	16667	...
78	100000	80000	83333	60000	53333	50000	50000	40000	41667	40000	33333	33333	30000	26667	25000	25000	20000	20800
79	...	106667	100000	80000	66667	66667	60000	53333	50000	50000	40000	41667	40000	33333	33333	30000	26667	25000
80	...	133333	133333	100000	80000	83333	80000	66667	66667	60000	53333	50000	50000	40000	41667	40000	33333	33333
81	...	...	166667	...	106667	100000	100000	80000	83333	80000	66667	66667	60000	53333	50000	50000	40000	41667
82	...	...	200000	...	133333	133333	...	106667	100000	100000	80000	83333	80000	66667	66667	60000	53333	50000
83	...	...	250000	...	...	166667	...	133333	133333	...	106667	100000	100000	80000	83333	80000	66667	66667
84	...	...	300000	...	...	200000	...	...	166667	...	133333	133333	...	106667	100000	100000	80000	83333
85	...	...	400000	...	...	250000	...	...	200000	...	...	166667	...	133333	133333	...	106667	100000
86	...	...	...	...	...	300000	...	...	250000	...	...	200000	...	...	166667	...	133333	133333
87	...	...	...	...	...	400000	...	...	300000	...	...	250000	...	...	200000	...	...	166667
88	...	...	...	...	...	...	...	...	400000	...	...	300000	...	...	250000	...	...	200000
89	...	...	...	...	...	...	...	...	...	...	...	400000	...	...	300000	...	...	250000
90	...	...	...	...	...	...	...	...	...	...	...	...	...	...	400000	...	...	300000
91	...	...	...	...	...	...	...	...	...	...	...	...	...	...	...	...	...	400000

*Classes of cooling (see 2.6.1 of American National Standard C57.12.00-1988.
**First- and second-stage auxiliary cooling (see TR 1.0.02).
†For column 2 and 3 ratings, the sound levels are with the auxiliary cooling equipment in operation.
††For Intermediate kVA ratings, use the average sound level of the next larger kVA rating.
▲The equivalent two-winding 55°C or 65°C rating is defined as one-half the sum of the kVA rating of all windings.
▲▲Sixty-seven decibels for all kVA ratings equal to this or smaller.

Not for Resale

NEMA TR*1 93 ■ 6470247 0504687 6T2 ■

Table 0-3
AUDIBLE SOUND LEVELS FOR LIQUID-IMMERSED DISTRIBUTION TRANSFORMERS AND NETWORK TRANSFORMERS

Equivalent Two-winding kVA	Average Sound Level, Decibels
0–50	48
51–100	51
101–300	55
301–500	56
750	57
1000	58
1500	60
2000	61
2500	62

Table 0-4
AUDIBLE SOUND LEVELS FOR DRY-TYPE TRANSFORMERS 15000-VOLT NOMINAL SYSTEM VOLTAGE AND BELOW

Equivalent Two-Winding kVA	Average Sound Level, Decibels		Equivalent Two-winding kVA	Average Sound Level, Decibels Ventilated Forced Air Cooled **,†
	Self-cooled Ventilated*	Self-cooled Sealed*		
0–50	50	50	...	...
51–150	55	55	...	...
151–300	58	57	3–300	67
301–500	60	59	301–500	67
501–700	62	61	501–833	67
701–1000	64	63	834–1167	67
1001–1500	65	64	1168–1667	68
1501–2000	66	65	1668–2000	69
2001–3000	68	66	2001–3333	71
3001–4000	70	68	3334–5000	73
4001–5000	71	69	5001–6667	74
5001–6000	72	70	6668–8333	75
6001–7500	73	71	8334–10000	76

* Class AA rating

**Does not apply to sealed-type transformers.

†Class FA and AFA ratings

Copyright National Electrical Manufacturers Association
Provided by IHS under license with NEMA
No reproduction or networking permitted without license from IHS

Not for Resale

Part 1
POWER TRANSFORMERS

The American National Standard C57.12.10-1988 has been approved as a NEMA Standard for power transformers and should be inserted in this Part 1.

The ANSI/IEEE Standard C57.92-1992, has been approved by NEMA and should be inserted in this Part 1.

The following other parts of this NEMA Publication No. TR 1 shall also apply:

a. Part 1 General
b. Part 6 Terminology
c. Part 7 Test Code
d. Part 12 Underground-Type Three-Phase Distribution Transformer

Copyright National Electrical Manufacturers Association
Provided by IHS under license with NEMA
No reproduction or networking permitted without license from IHS

Not for Resale

Copyright National Electrical Manufacturers Association
Provided by IHS under license with NEMA
No reproduction or networking permitted without license from IHS

Not for Resale

Part 2
DISTRIBUTION TRANSFORMERS

The following American National Standards have been approved as NEMA Standards for distribution transformers and should be inserted in this Part 2:

ANSI C57.12.20-1988	*Requirements for Overhead-Type Distribution Transformers, 500 kVA and Smaller: High Voltage, 34500 Volts and Below; Low Voltage, 7970/13800Y Volts and Below*
ANSI C57.12.21-1980	*Requirements for Pad-Mounted, Compartmental-Type, Self-Cooled, Single-Phase Distribution Transformers with High-Voltage Bushings; (High-Voltage, 34500 Grd Y/19920 Volts and Below; Low-Voltage, 240/120 Volts; 167 kVA and Smaller)*
ANSI C57.12.22-1989	*Requirements for Pad-Mounted, Compartmental-Type, Self-Cooled, Three-Phase Distribution Transformers with High-Voltage Bushings 2500 kVA and Smaller; High-Voltage, 34500 Grd Y/19920 Volts and Below; Low Voltage, 480 Volts and Below*
ANSI C57.12.23-1992	*Requirements for Underground-Type Self-Cooled Single-Phase Distribution Transformers, with Separable Insulated High-Voltage Connectors; High-Voltage 24940 Grd Y/14400 Volts and Below; Low-Voltage 240/120; 167 kVA and Smaller*
ANSI C57.12.25-1990	*Requirements for Pad-Mounted, Compartmental-Type, Self-Cooled, Single-Phase Distribution Transformers with Separable Insulated High-Voltage Connectors: High-Voltage 34500 Grd Y/19920 Volts and below: Low-Voltage 240/120 Volts; 167 kVA and Smaller*
ANSI C57.12.26-1987	*Pad-Mounted Compartmental-Type Self-Cooled, Three-Phase Distribution Transformers for use with Separable High-Voltage Connectors (High-Voltage 34500 Grd Y/19920 Volts and Below: 2500 kVA and Smaller)*
ANSI C57.91-1992	*Guide for Loading Mineral Oil-Immersed Overhead-type Distribution Transformers with 55C or 65C Average Winding Rise*

The following parts of this NEMA Publication No. TR 1 shall apply for distribution transformers:

Part 0 General
Part 6 Terminology
Part 7 Test Code
Part 12 Underground-type Three-Phase Distribution Transformers

2.01 DESIGN TEST FOR ENCLOSURE SECURITY OF PADMOUNTED COMPARTMENTAL TRANSFORMERS

This standard provides a means for evaluating the security of enclosures for transformers conforming to the following American National Standards.

ANSI C57.12.21-1980	*Requirements for Pad-Mounted, Compartmental-Type, Self-Cooled, Single-Phase Distribution Transformers with High-Voltage Bushings; High-Voltage, 34500 Grd Y/19920 Volts and Below; Low-Voltage, 240/120 Volts; 167 kVA and Smaller*
ANSI C57.12.22-1989	*Requirements for Pad-Mounted, Compartmental-Type, Self-Cooled, Three-Phase Distribution Transformers with High-Voltage Bushings 2500 kVA and smaller; High-Voltage, 34500 Grd Y/19920 Volts and Below; Low Voltage 480 Volts and Below*
ANSI C57.12.25-1990	*Requirements for Pad-Mounted, Compartmental-Type, Self-Cooled, Single-Phase Distribution Transformers with Separable Insulated High-Voltage Connectors: High-Voltage 34500 Grd Y/19920 Volts and below: Low-Voltage 240/120 Volts; 167 kVA and Smaller*

Copyright National Electrical Manufacturers Association
Provided by IHS under license with NEMA
No reproduction or networking permitted without license from IHS
Not for Resale

ANSI C57.12.26-1987 *Pad-Mounted Compartmental-Type Self-Cooled, Three-Phase Distribution Transformers for use with Separable High-Voltage Connectors (High-Voltage 34500 Grd Y/19920 Volts and Below: 2500 kVA and Smaller)*

Copyright National Electrical Manufacturers Association
Provided by IHS under license with NEMA
No reproduction or networking permitted without license from IHS

Not for Resale

Part 3
SECONDARY NETWORK TRANSFORMERS

The American National Standard Requirements for Secondary Network Transformers, Subway and Vault Types (Liquid Immersed), C57.12.40-1990, (with the exception of paragraphs 5.5.4 and 11.5.2 on finishes) have been approved as NEMA Standards for secondary network transformers and should be inserted in this Part 3.

The following other parts of this NEMA Publication No. TR 1 shall also apply for secondary network transformers:

a. Part 0 General
b. Part 6 Terminology
c. Part 7 Test Code

Copyright National Electrical Manufacturers Association
Provided by IHS under license with NEMA
No reproduction or networking permitted without license from IHS

Not for Resale

Copyright National Electrical Manufacturers Association
Provided by IHS under license with NEMA
No reproduction or networking permitted without license from IHS

Not for Resale

Part 4
DRY-TYPE TRANSFORMERS

The following American National Standards have been approved as NEMA Standards for dry-type transformers and should be inserted in this Part 4:

ANSI/IEEE C57.12.01-1989	*General Requirements for Dry-type Distribution and Power Transformers*
ANSI/IEEE C57.12.91-1979	*Test Code for Dry-Type Distribution and Power Transformers*
ANSI C57.12.50-1989	*Requirements for Ventilated Dry-Type Distribution Transformers, 1 to 500 kVA, Single-Phase; and 15 to 500 kVA, Three-Phase; With High-Voltage 601-34500 Volts, Low-Voltage 120-600 Volts*
ANSI C57.12.51-1989	*Requirements for Ventilated Dry-Type Power Transformers, 501 kVA and Larger, Three-Phase With High-Voltage 601-34500 Volts, Low-Voltage 208Y/120-4160 Volts*
ANSI C57.12.52-1989	*Requirements for Sealed Dry-Type Power Transformers, 501 kVA and Larger, Three-Phase, With High-Voltage 601-34500 Volts, Low-Voltage 208Y/120-4160 Volts*
ANSI/IEEE C57.94-1982	*Recommended Practices for Installation, Application, Operation and Maintenance of Dry-Type General Purpose Distribution and Power Transformers*
ANSI/IEEE C57.96-1989	*Guide for Loading Dry-Type Transformers, Appendix to C57.12 Standards*

Copyright National Electrical Manufacturers Association
Provided by IHS under license with NEMA
No reproduction or networking permitted without license from IHS

Not for Resale

Copyright National Electrical Manufacturers Association
Provided by IHS under license with NEMA
No reproduction or networking permitted without license from IHS

Not for Resale

Part 5
UNIT SUBSTATION TRANSFORMERS

The following other parts of this NEMA Publication No. TR 1 shall also apply for unit substation transformers.

a. Part 0 General
b. Part 6 Terminology
c. Part 7 Test Code

Copyright National Electrical Manufacturers Association
Provided by IHS under license with NEMA
No reproduction or networking permitted without license from IHS

Not for Resale

Copyright National Electrical Manufacturers Association
Provided by IHS under license with NEMA
No reproduction or networking permitted without license from IHS

Not for Resale

Part 6
TERMINOLOGY

The ANSI/IEEE Standard C57.12.80-1992, has been approved as a NEMA Standard for terminology and should be inserted in this Part 6.

Copyright National Electrical Manufacturers Association
Provided by IHS under license with NEMA
No reproduction or networking permitted without license from IHS

Not for Resale

Copyright National Electrical Manufacturers Association
Provided by IHS under license with NEMA
No reproduction or networking permitted without license from IHS

Not for Resale

Part 7
TEST CODE

The American National Standard ANSI/IEEE C57.12.90-1987, has been approved as a NEMA Standard for transformer tests and should be inserted in this Part 7.

This NEMA standard, Part 7, shall also apply for transformer tests.

The ANSI/IEEE Standard C57.98-1992, should be inserted in this Part 7.

7.01 TEST CODE FOR MEASUREMENT OF RADIO INFLUENCE VOLTAGE LEVELS

a. Apparatus

The apparatus to be tested under this code can be divided into two general classes as follows:

Class 1— Potential-type transformer apparatus, such as transformers for step-up, step-down or interconnected service, and some arrangements of regulating transformers and autotransformers.

Class 2— Series-type transformer apparatus, such as series transformers, shunt (iron core) reactors, current-limiting reactors and some arrangements of regulating transformers and autotransformers.

b. Equipment

The equipment and general method used in determining the radio influence voltage shall be in accordance with the NEMA Standards Publication Methods of Measurement of Radio Influence Voltage (RIV) of High-voltage Apparatus, 107-1964 (R-1971, 1976, R-1992). For an alternate method, see par. E, Use of Bushing Capacitance Tap.

c. Connections for testing—Class A-1 Apparatus

The test voltage shall preferably be impressed across the winding under test (see Fig. 7-1). It may, however, be induced from a winding other than that being tested (see Fig. 7-2). In order that the results be comparable, the circuit arrangements and constants must be as shown in Fig. 7-1 or 7-2. The winding shall be tested first with one end grounded and then with the other end grounded.

The test on a reduced-voltage neutral terminal shall correspond to the insulation class of the neutral. Windings with one end solidly grounded obviously will receive no test on the grounded end.

One terminal of each winding not under test, the ground terminal if one is available, shall be connected to the tank and ground.

d. Connections for testing— Class A-2 Apparatus

The test voltage shall be applied to the winding under test, with all terminals of the winding under test tied together (see Fig. 7-3).

e. Use of bushing capacitance tap

If radio influence voltage is measured at the capacitance tap of the bushing, a suitable device shall be used which can be tuned with the bushing tap to ground capacitance at the measuring frequency. This device shall constitute all circuit elements from the capacitance tap of the bushing to the radio noise meter.

The coaxial cable, an element of the device, may be any suitable impedance and need not be terminated in its characteristic impedance. The purpose of the device is to minimize the dividing effect of the bushing capacitance and to convey the radio influence voltage to the radio noise meter with minimum attenuation. See Fig. 7-4 and 7-5.

f. Calibration for circuits using bushing capacitance tap

The calibration ratio will be determined by:

1. Applying to the terminal under test the output of a sine-wave signal generator at approximately 100 microvolts and at the measuring frequency, or that of a pulse signal generator at approximately 100 microvolts.
2. Measuring the voltage on the terminal with the radio noise meter connected directly to the terminal.
3. Measuring, with the same radio noise meter, the voltage appearing in the test circuit at the location where the radio noise meter will be connected during the radio influence voltage measurement on the transformer (a second radio noise meter shall be permitted to be used instead, provided its relationship to the first radio noise meter has been established).
4. It shall be established that this calibration ratio remains valid over the radio influence voltage range of interest.

The ratio of the voltage measured with the radio noise meter at the terminal to the voltage measured with the radio noise meter at the normal location in the circuit

Copyright National Electrical Manufacturers Association
Provided by IHS under license with NEMA
No reproduction or networking permitted without license from IHS
Not for Resale

which has been selected for the corona test on the transformer will be applied as a correction factor to the radio influence voltage reading obtained during the corona test to determine the actual radio influence voltage at the terminal of the winding under test.

g. Test voltage

The test voltage shall be determined from the preferred nominal system voltage in accordance with 0.04 in Part 0, except that the test voltage shall not exceed 110 percent of the rated voltage of the winding on the highest tap connection.

h. Precautions in making tests

The following precautions should be observed in measuring the radio influence voltage. The apparatus should be:

1. Tested at approximately the same temperature as the room in which the tests are made
2. Located as to provide the outside clearances recommended.

Copyright National Electrical Manufacturers Association
Provided by IHS under license with NEMA
No reproduction or networking permitted without license from IHS
Not for Resale

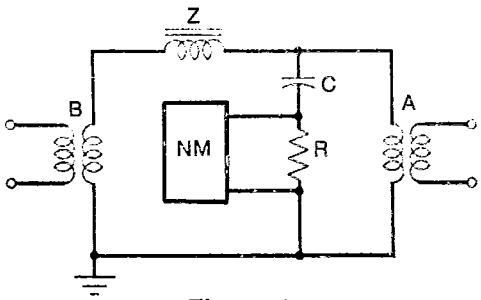

Fig. 7-1*

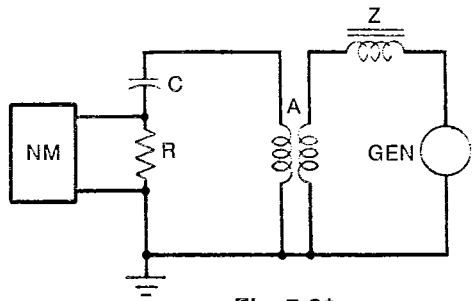

Fig. 7-2*

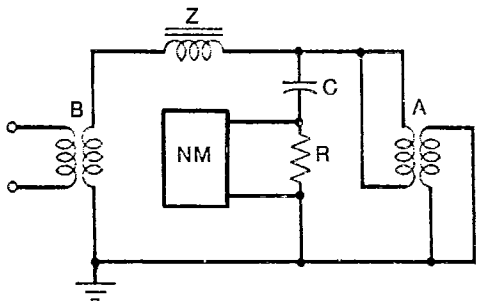

Fig. 7-3*

A -Transformer under test
B -Testing transformer
C -Coupling capacitor
NM-Radio noise meter
R -Terminating resistance
Z -Radio frequency choke

* Values for radio circuit elements and detailed connections shall conform to the NEMA Standards Publication *Methods of Measurement of Radio Influence Voltage (RIV) of High-voltage Apparatus*, 107-1964 (R 1971, 1976, R 1992).

TEST CIRCUITS FOR RADIO INFLUENCE MEASUREMENTS USING THE BUSHING CAPACITANCE TAP:

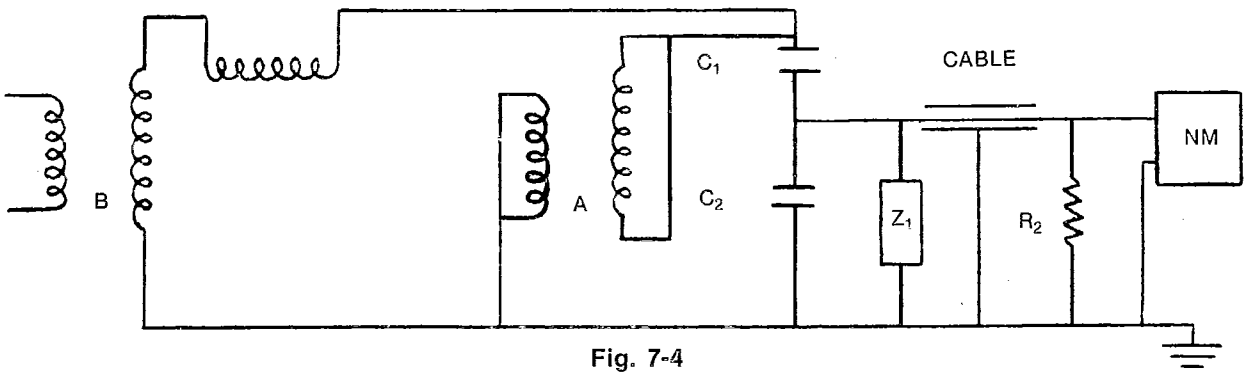

Fig. 7-4

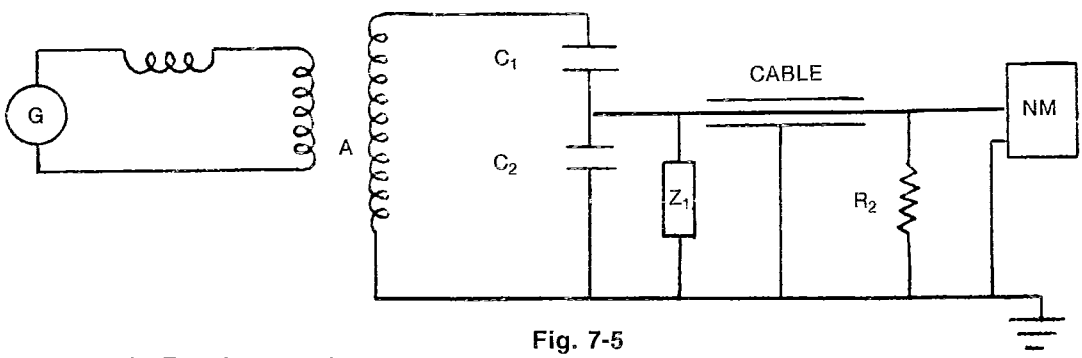

Fig. 7-5

A -Transformer under test
B -Testing transformer
C_1-High-voltage bushing capacitance
C_2-High-voltage bushing capacitance tap
CABLE-Shielded cable
Z_1 -Variable inductance
R_2 -Resistor
NM -Radio noise meter

Copyright National Electrical Manufacturers Association
Provided by IHS under license with NEMA
No reproduction or networking permitted without license from IHS

Not for Resale

7.02 TRANSFORMER TEST REPORT

To facilitate safe and effective operation of transformers it is recommended that the following information be included in the test report:

Manufacturer's Name _____

Purchaser _____

Date of Test _____ **Purchaser's Order No.** _____ **Mfr.'s Ref. No.** _____

Cooling Class _____ **Phase** _____ **Hertz** _____ **Insulating Fluid** _____

Winding (1) _____ Volts _____ kVA (2) _____ Volts _____ kVA (3) _____ Volts _____ kVA

Taps _____

RESISTANCE, EXCITING CURRENT, LOSSES AND IMPEDANCE—Based on normal rating unless otherwise stated. Losses and regulation are based on wattmeter measurements. For three-phase transformers the resistances given are the sum of the three phases in series.

Serial No.	Resistance in Ohms at 85°C			Exciting Current Percent at 100% Voltage	No Load Loss In Watts 100% Voltage	Watts Loss and Impedance at 85°C					
						_____V to _____V _____ kVA		_____V to _____V _____ kVA		_____V to _____V _____ kVA	
	(1)	(2)	(3)			Load Loss	% Imp.	Load Loss	% Imp.	Load Loss	% Imp.
						Total Loss		Total Loss		Total Loss	
Average											
Guarantee											

TEMPERATURE RISES are in degrees C corrected to instant shutdown.

Serial No _____ with windings connected and loaded as follows:

Multi-winding transformer heat run connections for the determination of the maximum winding rises over ambient may not be the same as that for the maximum losses which produce the maximum fluid rise. Such temperature rise entries shall be on separate lines in the Temperature Rise table of the Test Report Form. Precautions should be taken to assure that the fluid temperature rise and winding rises entered on a common line correspond to the same test conditions.

Cool Mode	Temp. Rise Guar. °C	Fluid R. Above Amb.			Winding Differential Above Average Fluid								
					Energized Winding			Shorted Winding			Rise by Res. °C		
		Losses Dissipated	Top °C	Ave. °C		Tap-kV	Amps		Tap-kV	Amps	(1)	(2)	(3)

DIELECTRIC TESTS—If Impulse Tests are required, see separate Transformer Impulse Test Report.

		Voltage Rating of Winding Tested	Test Voltage Applied	Duration of Test in Seconds
APPLIED POTENTIAL TESTS Voltage applied between each winding and all other windings connected to core and ground.				
INDUCED POTENTIAL TESTS	_____ hertz for _____ cycles	_____ times rated voltage across full winding _____ kV from _____ kV line terminal to ground		

REMARKS:

I hereby certify this is a true report based on factory tests made in accordance with the Transformer Test Code C57.12.90 current edition of the American National Standards Institute, and that each Transformer withstood the above insulation tests.

Signed _____ Date _____ Approved by _____
Transformer Engineering Dept.

Authorized Engineering Information 11-20-1980.

Copyright National Electrical Manufacturers Association
Provided by IHS under license with NEMA
No reproduction or networking permitted without license from IHS
Not for Resale

7.03 TRANSFORMER IMPULSE TEST REPORT

To facilitate safe and effective operation of transformers it is recommended that the following information be included in the test report:

Manufacturer's Name _____

Purchaser _____

Date of Test _____ **Purchaser's Order No.** _____ **Mfr.'s References** _____

Type _____ **Phase** _____ **Cycles** _____ **Insulating Fluid** _____

H-winding _____ **Volts** **X-winding** _____ **Volts** **Y-winding** _____ **Volts**

Serial No.	Oscillograms	Test*	Surge Applied on Terminal No.	kV Required	kV Applied	Microsecond to Crest	Microsecond to Flashover

***RFW-Reduced Full Wave** ***CW-Chopped Wave** ***FW-Full Wave**

REMARKS:

Signed _____ **Date** _____ **Approved** _____
Transformer Engineering Dept.

Page _____ **of** _____ **Pages**

Copyright National Electrical Manufacturers Association
Provided by IHS under license with NEMA
No reproduction or networking permitted without license from IHS
Not for Resale

7.04 REACTOR TEST REPORT

To facilitate safe and effective operation of transformers it is recommended that the following information be included in the test report:

Manufacturer's Name _____

Purchaser _____

Date of Tests _____ **Purchaser's Order No.** _____ **Mfr.'s Ref. No.** _____

Type _____ **Phase** _____ **Cycles** _____ **Insulating Fluid** _____

Volts Drop _____ **kVA** _____ **Amperes** _____

For connection in _____ **Volt Circuit** _____

RESISTANCES, LOSSES AND IMPEDANCE are based on normal rating, unless otherwise stated. Losses are based on wattmeter measurements.

Serial No.	Resistance at 85 °C			Total Loss Watts 85 °C	Impedance	
	Phase A	Phase B	Phase C		Volts	%
Average						
Guarantee						

TEMPERATURE RISE in degrees C corrected to instant of shutdown.

Serial No.	Amperes	Rise by Resistance	Guarantee

INSULATION TESTS—high-potential tests were made on each reactor. Voltage was applied between winding and ground and between phases of a polyphase reactor. Voltage at high frequency was induced in each winding to test the turn-to-turn strength.

Voltage Rating of Winding	Applied Voltage at Normal Frequency	Induced Voltage at High Frequency

REMARKS:

Signed _____ **Date** _____ **Approved** _____

Copyright National Electrical Manufacturers Association
Provided by IHS under license with NEMA
No reproduction or networking permitted without license from IHS

Not for Resale

Part 8
TRANSMISSION AND DISTRIBUTION VOLTAGE REGULATORS

The ANSI/IEEE Standard C57.15-1992, has been approved as NEMA Standards for transmission and distribution voltage regulators and should be inserted in this Part 8.

The ANSI/IEEE Stanard C57.95-1992. Appendix to C57.15, has been approved as NEMA Standard for Transmission and distribution voltage regulators and should be inserted in this Part 8.

Copyright National Electrical Manufacturers Association
Provided by IHS under license with NEMA
No reproduction or networking permitted without license from IHS

Not for Resale

Copyright National Electrical Manufacturers Association
Provided by IHS under license with NEMA
No reproduction or networking permitted without license from IHS

Not for Resale

Part 9
CURRENT-LIMITING REACTORS

[To Be Published]

Copyright National Electrical Manufacturers Association
Provided by IHS under license with NEMA
No reproduction or networking permitted without license from IHS

Not for Resale

Copyright National Electrical Manufacturers Association
Provided by IHS under license with NEMA
No reproduction or networking permitted without license from IHS

Not for Resale

Part 10
ARC FURNACE TRANSFORMERS

The following other parts of this NEMA Publication No. TR 1 shall also apply for arc furnace transformers:

a. Part 0 General
b. Part 6 Terminology
c. Part 7 Test Code

Copyright National Electrical Manufacturers Association
Provided by IHS under license with NEMA
No reproduction or networking permitted without license from IHS

Not for Resale

Copyright National Electrical Manufacturers Association
Provided by IHS under license with NEMA
No reproduction or networking permitted without license from IHS

Not for Resale

Part 11
SHUNT REACTORS

The American National Standard, C57.21-1991, has been approved by NEMA and should be inserted in this Part 11.

Copyright National Electrical Manufacturers Association
Provided by IHS under license with NEMA
No reproduction or networking permitted without license from IHS

Not for Resale

NEMA STANDARDIZATION BACKGROUND

The purpose of NEMA standards, their classification, and status are set forth in certain clauses of the NEMA *Standardization Policies and Procedures* manual and are referenced below:

Purpose of Standards

National Electrical Manufacturers Association Standards are adopted in the public interest and are designed to eliminate misunderstandings between the manufacturer and the purchaser and to assist the purchaser in selecting and obtaining the proper product for their particular needs. Existence of a National Electrical Manufacturers Association Standard does not in any respect preclude any member or nonmember from manufacturing or selling products not conforming to the standard.

Definition of a Standard

A standard of the National Electrical Manufacturers Association defines a product, process, or procedure with reference to one or more of the following: nomenclature, composition, dimensions, tolerances, safety, operating characteristics, performance, rating, testing, and the service for which they are designed.

(Standardization Policies and Procedures, p. 1)

Dimensions

Where dimensions are given for interchangeability purposes, alternate dimensions satisfying the other provisions of the Standards Publication may be capable of otherwise equivalent performance.

(Standardization Policies and Procedures, p. 6)

Categories of Standards

National Electrical Manufacturers Association Standards are of three classes, which have received the affirmative vote of at least two-thirds of the Subdivision votes cast in the affirmative or negative:

1. NEMA Standard, which relates to a product, process, or procedure commercially standardized and subject to repetitive manufacture.
2. Suggested Standard for Future Design, which may not have been regularly applied to a commercial product, but which suggests a sound engineering approach to future development.
3. Adoptive Standard, which is adopted in whole or in part from the standards of another organization, either domestic, regional, or international.

(Standardization Policies and Procedures, pp. 5)

Authorized Engineering Information

Authorized Engineering Information consists of explanatory data and other engineering information of an informative character not falling within the classification of NEMA Standard or Suggested Standard for Future Design, which standard has received the affirmative vote of at least two-thirds of the Subdivision votes cast in the affirmative or negative.

(Standardization Policies and Procedures, pp. 5)

Identification of Status

Standards in NEMA Standards Publications are identified as "NEMA Standard," "Suggested Standard for Future Design," or "Adoptive Standard." These indicate the status of the standard. A statement incorporating the auxiliary verb "shall" indicates that compliance with a requirement is mandatory for compliance with the standard. These classes of standards are identified in the foreword or throughout the text.

The material identified as "Authorized Engineering Information" is designated similarly. Statements incorporating other auxiliary verbs such as "should," "may," etc. refer to the authorized engineering information and not to procedures required for compliance with the standard.

Copyright National Electrical Manufacturers Association
Provided by IHS under license with NEMA
No reproduction or networking permitted without license from IHS
Not for Resale

TRANSFORMER SECTION
OF THE
NATIONAL ELECTRICAL MANUFACTURERS ASSOCIATION

ABB Power T&D Company
Jefferson City, MO 65102

Challenger Electric Equipment Corp.
Raleigh, NC 27609

Cooper Power Systems
A Sub of Cooper Industries, Inc.
Waukesha, WI 53186

Ferranti-Packard Transformers, Ltd.
Dunkirk, NY 14048

General Electric
Hickory, NC 28601

Hammond Manufacturing, Inc.
Buffalo, NY 14225

Kentucky Assn. Elec. Cooperatives, Inc.
Louisville, KY 40232

Niagara Transformer Corp.
Buffalo, NY 14225

North American Transformer
Milpitas, CA 95035

Pauwels Transformers
Washington, MO 63090

Siemens Energy & Automation, Inc.
West Allis, WI 53214

Square D Company
Palatine, IL 60067

R E Uptegraff Manufacturing Co.
Scottdale, PA 15683

Vantran Electric Corp.
Waco, TX 76702

Virginia Transformer Corp.
Roanoke, VA 24012

Copyright National Electrical Manufacturers Association
Provided by IHS under license with NEMA
No reproduction or networking permitted without license from IHS
Not for Resale