TC 9-83 6470247 0004181 7
A-07-07

NEMA STANDARDS PUBLICATION/NO. TC 9-1983

Fittings for ABS and PVC Plastic Utilities Duct for Underground Installation

NEMA

Copyright National Electrical Manufacturers Association
Provided by IHS under license with NEMA
No reproduction or networking permitted without license from IHS
Not for Resale

NATIONAL ELECTRICAL MANUFACTURERS ASSOCIATION 2101 L STREET, N.W., WASHINGTON, D.C. 20037

TABLE OF CONTENTS

		Page
	FOREWORD	i
	SCOPE	i
Section 1	REFERENCED STANDARDS	1
Section 2	GENERAL	
	Definitions, Abbreviations, and Dimension Symbols	2
	Materials	2
	Nominal Sizes	2
	Dimensions	2
	Workmanship	2
Table 1	Fittings	2
Table 2	Sockets for Molded Fittings	3
Table 3	Sockets for Thermoformed (Fabricated) Fittings	4
Table 4	Couplings	5
Table 5	Terminal Adapters	6
Table 6	Female Adapters	6
Table 7	Socket End Bell	7
Table 8	Socket End Bell	7
Table 9	Domed Cap	8
Table 10	Flat Cap	8
Table 11	Fitting Plug	9
Table 12	Duct Plug, Tapered	9
Table 13	Fiber Conduit Adapter	10
Table 14	Cement Asbestos Conduit Adapter	11
Table 15	Watertight Expansion Coupling	12
Table 16	Bends and Sweeps	13
Table 17	5-Degree Angle Couplings	14

© 1984 by National Electrical Manufacturers Association

Copyright National Electrical Manufacturers Association
Provided by IHS under license with NEMA
No reproduction or networking permitted without license from IHS
Not for Resale

Foreword

The purpose of these standards for fittings for plastic utilities duct for underground installation is:

1. To list dimensions and other significant requirements.
2. To set forth some of the properties of this product and to assist in selecting and obtaining the proper product for a particular need.

User needs have been considered throughout the development of these standards. Test methods and performance values have been related as closely as possible to end-use applications.

The Plastic Conduit, Duct and Accessories Section of NEMA, through its members, has worked (and continues to work) closely with such organizations as the American Society for Testing and Materials, the Plastic Pipe Institute, appropriate government agencies, and others in the periodic review and revision of these standards for any changes necessary to keep them up to date with advancing technology. Proposed or recommended revisions should be submitted to:

Manager, Engineering Department
National Electrical Manufacturers Association
2101 L Street, N.W.
Washington, D.C. 20037

Scope

These standards cover the following types of fittings for ABS and PVC plastic utilities duct used for the underground installation of communication and electrical wire and cable:

Type EB—Designed for encased burial in concrete when installed (also referred to as Type I Duct).

Type DB—Designed for direct burial without encasement in concrete (also referred to as Type II Duct).

NOTE 1—The values stated in U.S. customary units are to be regarded as the standard.

Copyright National Electrical Manufacturers Association
Provided by IHS under license with NEMA
No reproduction or networking permitted without license from IHS
Not for Resale

FITTINGS FOR ABS AND PVC PLASTIC UTILITIES DUCT FOR UNDERGROUND INSTALLATION

Section 1
REFERENCED STANDARDS

In this publication, reference is made to the following ASTM Standards. The latest editions should be used. Copies are available from the American Society for Testing and Materials, 1916 Race Street, Philadelphia, PA 19103.

D 883-80(1982)	*Definitions of Terms Relating to Plastics*
D 1600-81	*Abbreviations of Terms Relating to Plastics*
D 1784-81	*Poly(Vinyl Chloride) (PVC) Compounds and Chlorinated Poly(Vinyl Chloride) (CPVC) Compounds, Rigid*
D1788-81	*Rigid Acrylonitrile-Butadiene-Styrene (ABS) Plastics*
D 2749-68(1979)	*Symbols for Dimensions of Plastic Pipe Fittings*
F 412-82a	*Definitions of Terms Relating to Plastic Piping Systems*

Copyright National Electrical Manufacturers Association
Provided by IHS under license with NEMA
No reproduction or networking permitted without license from IHS
Not for Resale

Section 2
GENERAL

2.1 DEFINITIONS, ABBREVIATIONS, AND DIMENSION SYMBOLS

Definitions for plastic utilities duct fittings shall be in accordance with ASTM D 833, abbreviations shall be in accordance with ASTM D 1600, and dimension symbols shall be in accordance with ASTM D 2749, unless otherwise specified.

NEMA Standard 1-14-1975.

2.2 MATERIALS

ABS plastic duct fittings shall be made from an acrylonitrile-butadiene-styrene (ABS) compound which meets cell classification ABS–1-2-3 as defined in ASTM D 1788.

PVC plastic duct fittings shall be made from a polyvinyl chloride compound which meets cell classification PVC 12234 as defined in ASTM D 1784.

NEMA Standard 1-14-1975.

Other ABS or PVC compounds which have a different cell classification because one or more properties are superior to those of the compounds specified above may also be used.

Reworked material may be used provided that the fittings produced meet all of the requirements of these standards.

Authorized Engineering Information 1-14-1975.

2.3 NOMINAL SIZES

The nominal sizes of fittings shall be 2, 3, 3½, 4, 5 and 6 inches.

NEMA Standard 1-14-1975.

2.4 DIMENSIONS

The dimensions of fittings shall be as shown in Tables 1 through 17 when measured at the point of manufacture.

NEMA Standard 1-14-1975.

2.5 WORKMANSHIP

Plastic duct fittings shall be homogeneous throughout and free from visible cracks, holes, burrs, foreign inclusions or other defects at the point of manufacture.

NEMA Standard 1-14-1975.

Table 2-1
FITTINGS

Type of Fitting	Nominal Size, Inches
Couplings Caps, plugs Female and terminal adapters End bells Expansion couplings Sweeps and bends, 22°, 30°, 45° and 90°	2, 3, 3½, 4, 5, 6
5-Degree angle couplings	2, 3, 4, 5, 6
Adapters to fiber conduit	2, 3, 4
Adapters to cement asbestos conduit	2, 3, 4

Copyright National Electrical Manufacturers Association
Provided by IHS under license with NEMA
No reproduction or networking permitted without license from IHS
Not for Resale

Table 2-2
SOCKETS FOR MOLDED FITTINGS

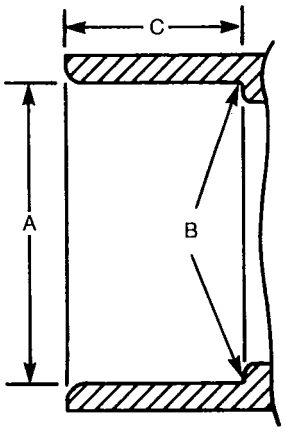

Inches

Nominal Size of Fitting in Inches	A Socket Entrance Inside Diameter			B Socket Bottom Inside Diameter			C
	Average	Tolerance on Average	Out-of-roundness Tolerance on Average	Average	Tolerance on Average	Out-of-roundness Tolerance on Average	Minimum Socket Depth
2	2.393	±0.006	±0.012	2.369	±0.006	±0.012	1.125
3	3.515	±0.008	±0.015	3.492	±0.008	±0.015	1.594
3½	4.015	±0.008	±0.050	3.992	±0.008	±0.015	1.687
4	4.515	±0.009	±0.050	4.491	±0.009	±0.015	1.750
5	5.593	±0.010	±0.050	5.553	±0.010	±0.030	1.937
6	6.658	±0.011	±0.050	6.614	±0.011	±0.030	2.215

Millimeters

Nominal Size of Fitting in Inches	A Socket Entrance Inside Diameter			B Socket Bottom Inside Diameter			C
	Average	Tolerance on Average	Out-of-roundness Tolerance on Average	Average	Tolerance on Average	Out-of-roundness Tolerance on Average	Minimum Socket Depth
2	60.78	±0.15	±0.30	60.17	±0.15	±0.30	28.58
3	89.28	±0.20	±0.38	88.70	±0.20	±0.38	40.49
3½	101.98	±0.20	±1.27	101.40	±0.20	±0.38	42.85
4	114.68	±0.23	±1.27	114.07	±0.23	±0.38	44.45
5	142.06	±0.25	±1.27	141.05	±0.25	±0.76	49.20
6	169.11	±0.28	±1.27	168.00	±0.28	±0.76	53.98

NOTE—Metal circular GO-NO-GO plug gauges machined to the minimum and maximum average inside diameters given in the table may be used to check dimensions A and B.

Copyright National Electrical Manufacturers Association
Provided by IHS under license with NEMA
No reproduction or networking permitted without license from IHS
Not for Resale

Table 2-3
SOCKETS FOR THERMOFORMED (FABRICATED) FITTINGS

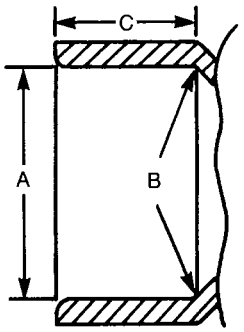

Inches

Nominal Size of Fitting in Inches	A Socket Entrance Inside Diameter			B Socket Bottom Inside Diameter			C
	Average	Tolerance on Average	Out-of-roundness Tolerance on Average	Average	Tolerance on Average	Out-of-roundness Tolerance on Average	Minimum Socket Depth
2	2.400	±0.006	±0.030	2.381	±0.006	±0.030	1.750
3	3.538	±0.008	±0.030	3.508	±0.008	±0.030	2.875
3½	4.041	±0.008	±0.050	4.008	±0.008	±0.050	3.125
4	4.544	±0.009	±0.050	4.509	±0.009	±0.050	3.375
5	5.614	±0.010	±0.050	5.573	±0.010	±0.050	4.000
6	6.687	±0.011	±0.050	6.636	±0.011	±0.050	5.000

Millimeters

Nominal Size of Fitting in Inches	A Socket Entrance Inside Diameter			B Socket Bottom Inside Diameter			C
	Average	Tolerance on Average	Out-of-roundness Tolerance on Average	Average	Tolerance on Average	Out-of-roundness Tolerance on Average	Minimum Socket Depth
2	60.96	±0.15	±0.76	60.48	±0.15	±0.76	44.45
3	89.87	±0.20	±0.76	89.10	±0.20	±0.76	73.02
3½	102.64	±0.20	±1.27	101.80	±0.20	±1.27	79.38
4	115.42	±0.23	±1.27	114.53	±0.23	±1.27	85.72
5	142.60	±0.25	±1.27	141.55	±0.25	±1.27	101.60
6	169.85	±0.28	±1.27	168.55	±0.28	±1.27	127.00

NOTE—Metal circular GO-NO-GO plug gauges machined to the minimum and maximum average inside diameters given in the table may be used to check dimensions A and B.

Copyright National Electrical Manufacturers Association
Provided by IHS under license with NEMA
No reproduction or networking permitted without license from IHS
Not for Resale

Table 2-4
COUPLINGS

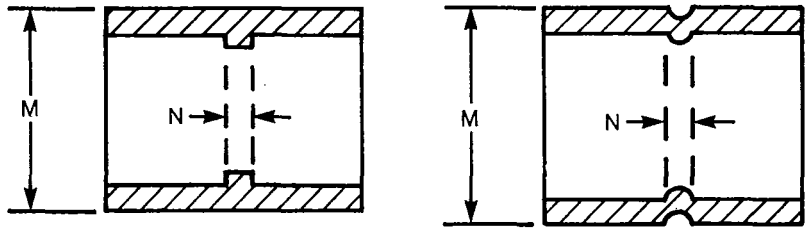

Inches

Nominal Size of Fitting in Inches	M Maximum	SH Maximum	N Minimum
2	2 47/64	0.075	3/32
3	3 31/32	0.076	7/64
3½	4½	0.087	7/64
4	5 1/32	0.097	7/64
5	6¼	0.118	9/64
6	7½	0.140	9/64

Millimeters

Nominal Size of Fitting in Inches	M Maximum	SH Maximum	N Minimum
2	69.5	1.90	2.4
3	100.8	1.93	2.8
3½	114.3	2.21	2.8
4	127.8	2.46	2.8
5	158.8	3.00	3.6
6	190.5	3.56	3.6

Copyright National Electrical Manufacturers Association
Provided by IHS under license with NEMA
No reproduction or networking permitted without license from IHS
Not for Resale

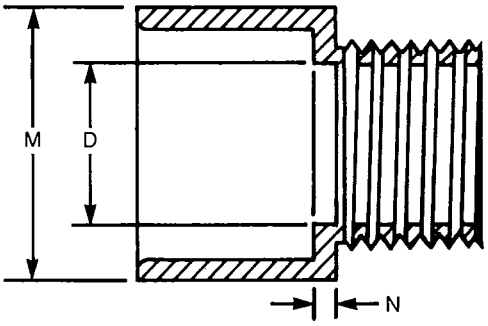

Table 2-5
TERMINAL ADAPTERS

Inches

Nominal Size of Fitting in Inches	M Maximum	D Minimum	N Minimum
2	2 59/64	1.964	5/32
3	4 1/16	2.915	15/64
3½	4 19/32	3.371	¼
4	5⅛	3.825	¼
5	6 9/32	4.795	19/64
6	7½	5.762	17/64

Millimeters

Nominal Size of Fitting in Inches	M Maximum	D Minimum	N Minimum
2	74.2	49.89	4.0
3	103.2	74.04	6.0
3½	116.7	85.62	6.4
4	130.2	97.16	6.4
5	159.6	121.79	7.5
6	190.5	146.35	6.7

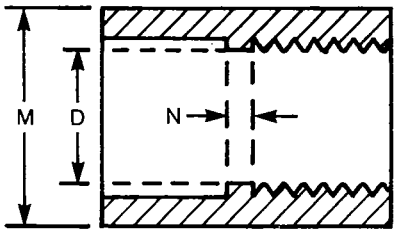

Table 2-6
FEMALE ADAPTERS

Inches

Nominal Size of Fitting in Inches	M Maximum	D Minimum	N Minimum
2	2 27/32	1.964	5/64
3	1 3/64	2.915	11/64
3½	4 37/64	3.371	11/64
4	5 7/64	3.825	11/64
5	6 9/32	4.795	15/64
6	7 33/64	5.762	15/64

Millimeters

Nominal Size of Fitting in Inches	M Maximum	D Minimum	N Minimum
2	72.2	49.89	2.0
3	26.6	74.04	4.4
3½	116.3	85.62	4.4
4	129.8	97.16	4.4
5	159.6	121.79	6.0
6	190.9	146.35	6.0

Copyright National Electrical Manufacturers Association
Provided by IHS under license with NEMA
No reproduction or networking permitted without license from IHS
Not for Resale

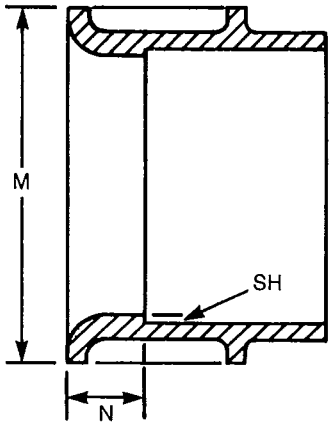

Table 2-7
SOCKET END BELL (MOLDED)

Inches

Nominal Size of Fitting in Inches	M Maximum	SH Maximum	N Minimum
2	3 7/64	0.075	5/16
3	4 1/8	0.076	5/16
3 1/2	4 5/8	0.087	5/16
4	5 11/32	0.097	7/16
5	6 13/32	0.118	7/16
6	7 13/32	0.140	7/16

Millimeters

Nominal Size of Fitting in Inches	M Maximum	SH Maximum	N Minimum
2	79.0	1.90	7.9
3	104.8	1.93	7.9
3 1/2	117.5	2.21	7.9
4	135.7	2.46	11.1
5	162.7	3.00	11.1
6	188.1	3.56	11.1

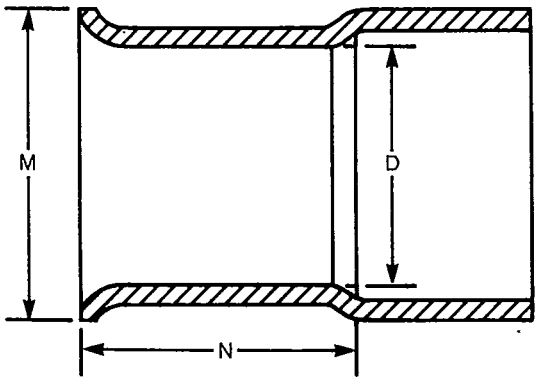

Table 2-8
SOCKET END BELL (FABRICATED)

Inches

Nominal Size of Fitting in Inches	M Maximum	N Minimum	D Minimum
2	4 9/32	2 25/32	2.173
3	5 9/32	2 15/16	3.208
3 1/2	4 3/4	3	3.668
4	5 1/2	3	4.129
5	6 1/2	4 1/4	5.195
6	7 1/2	3 1/4	6.192

Millimeters

Nominal Size of Fitting in Inches	M Maximum	N Minimum	D Minimum
2	108.7	70.6	55.19
3	134.1	74.6	81.48
3 1/2	120.6	76.2	93.17
4	139.7	76.2	104.88
5	165.1	108.0	131.95
6	190.5	82.6	157.28

Copyright National Electrical Manufacturers Association
Provided by IHS under license with NEMA
No reproduction or networking permitted without license from IHS
Not for Resale

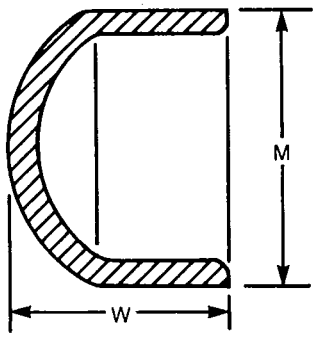

Table 2-9
DOMED CAP

Inches

Nominal Size of Fitting in Inches	W Maximum	M Maximum
2	2 3/32	2 13/16
3	3	4 3/32
3 1/2	3 1/8	4 5/8
4	3 31/64	5 13/64
5	4 27/64	6 1/4
6	5 7/32	7 25/64

Millimeters

Nominal Size of Fitting in Inches	W Maximum	M Maximum
2	53.2	71.4
3	76.2	104.0
3 1/2	79.4	117.5
4	88.4	137.3
5	112.3	158.8
6	132.6	187.7

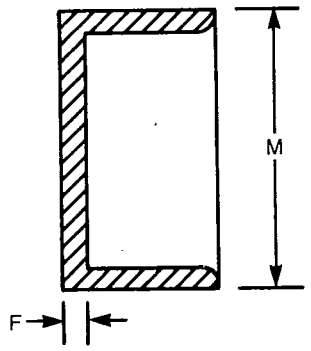

Table 2-10
FLAT CAP

Inches

Nominal Size of Fitting in Inches	F Minimum	M Maximum
2	19/32	2 35/64
3	1/16	3 45/64
3 1/2	5/64	4 7/32
4	3/32	4 3/4
5	3/32	5 53/64
6	1/8	6 61/64

Millimeters

Nominal Size of Fitting in Inches	F Minimum	M Maximum
2	15.1	64.7
3	1.6	94.1
3 1/2	2.0	107.2
4	2.4	120.6
5	2.4	148.0
6	3.2	176.6

Copyright National Electrical Manufacturers Association
Provided by IHS under license with NEMA
No reproduction or networking permitted without license from IHS
Not for Resale

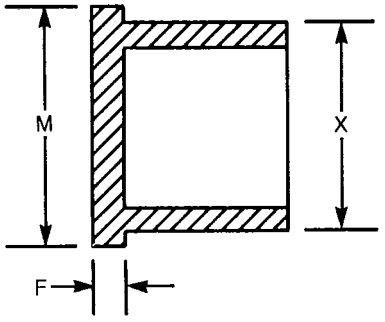

Table 2-11
FITTING PLUG

Inches

Nominal Size of Fitting in Inches	M Maximum	F Minimum	X Average	X Tolerance
2	2 19/32	23/64	2.375	±0.006
3	3 21/32	23/64	3.000	±0.008
3½	4 9/32	23/64	3.500	±0.008
4	4 25/32	23/64	4.500	±0.009
5	5 21/32	13/32	5.563	±0.010
6	...	...	...	...

Millimeters

Nominal Size of Fitting in Inches	M Maximum	F Minimum	X Average	X Tolerance
2	65.9	9.1	60.32	±0.15
3	92.9	9.1	88.90	±0.20
3½	108.7	9.1	101.60	±0.20
4	121.4	9.1	114.30	±0.23
5	143.7	10.3	141.30	±0.25
6	...	...	...	...

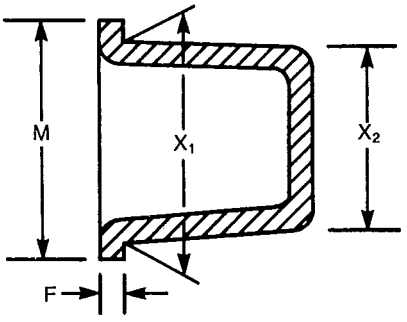

Table 2-12
DUCT PLUG, TAPERED

Inches

Nominal Size of Fitting in Inches	M Maximum	X_1 Minimum	X_2 Maximum	F Minimum
2	3 13/64	2¼	1⅞	7/64
3	4	3 35/64	2⅞	⅛
3½	4 9/16	4	3⅜	1/64
4	5 3/16	4 34/64	3 27/32	7/64
5	6 9/32	5¾	4⅞	7/64
6	6⅞	6 45/64	5⅞	5/64

Millimeters

Nominal Size of Fitting in Inches	M Maximum	X_1 Minimum	X_2 Maximum	F Minimum
2	81.4	54.0	47.6	2.8
3	101.6	90.1	73.0	3.2
3½	115.9	101.6	85.7	0.4
4	131.8	115.1	97.6	2.8
5	159.5	146.0	123.8	2.8
6	174.6	170.3	149.2	2.0

Copyright National Electrical Manufacturers Association
Provided by IHS under license with NEMA
No reproduction or networking permitted without license from IHS
Not for Resale

Table 2-13
FIBER CONDUIT ADAPTER

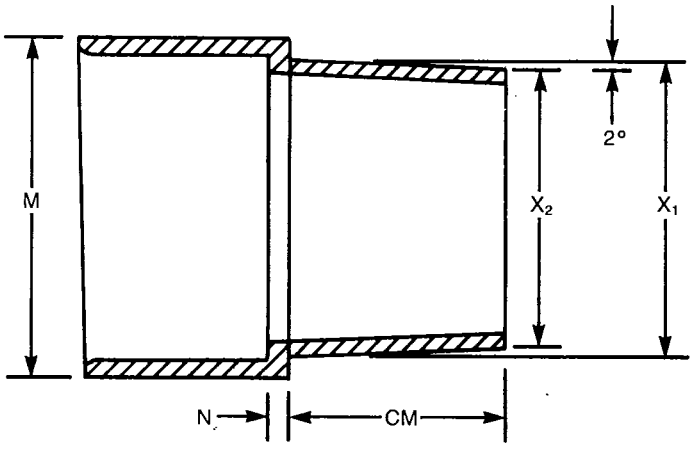

Inches

Nominal Size of Fitting in Inches	M Maximum	N Minimum	CM Nominal	X_1 Nominal	X_2 Nominal
2	2¾	5/64	1 7/16	2.470	2 25/64
3	4	9/64	1 11/16	3.448	3 11/32
4	5¾	11/64	1 15/16	4.493	4¾

Millimeters

Nominal Size of Fitting in Inches	M Maximum	N Minimum	CM Nominal	X_1 Nominal	X_2 Nominal
2	69.8	2.0	36.5	62.74	60.7
3	101.6	3.6	42.9	87.58	84.9
4	146.0	4.4	49.2	114.12	120.6

Copyright National Electrical Manufacturers Association
Provided by IHS under license with NEMA
No reproduction or networking permitted without license from IHS
Not for Resale

Table 2-14
CEMENT ASBESTOS CONDUIT ADAPTER

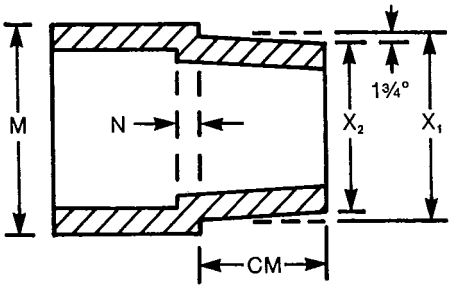

Inches

Nominal Size of Fitting in Inches	M Maximum	N Minimum	CM Nominal	X_1 Nominal	X_2 Nominal
2	2¾	5/64	1¾	2.580	2½
3	4	5/64	1¾	3.620	3 17/32
4	5 1/32	11/64	2	4.620	4 33/64

Millimeters

Nominal Size of Fitting in Inches	M Maximum	N Minimum	CM Nominal	X_1 Nominal	X_2 Nominal
2	69.8	2.0	44.4	65.53	63.5
3	101.6	2.0	44.4	91.95	89.7
4	127.8	4.4	50.8	117.35	114.7

Copyright National Electrical Manufacturers Association
Provided by IHS under license with NEMA
No reproduction or networking permitted without license from IHS
Not for Resale

Table 2-15
WATERTIGHT EXPANSION COUPLING

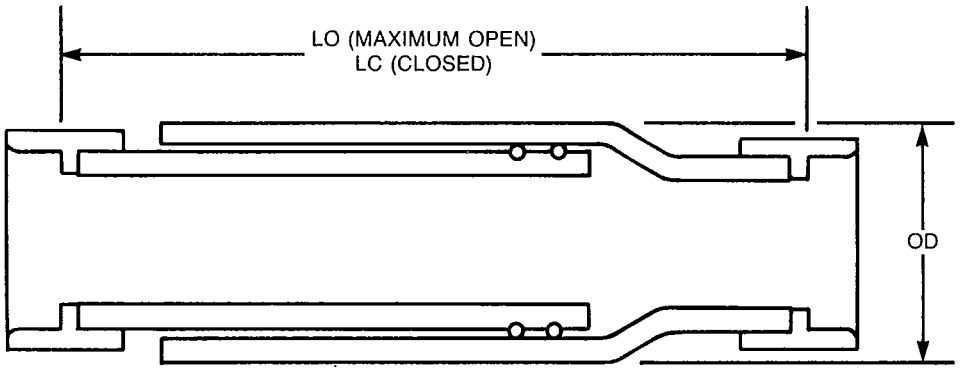

Inches

Nominal Size of Fitting in Inches	OD Maximum Outside Diameter	LO Maximum Lay Length Open	LC Minimum Lay Length Closed	Available Expansion-contraction Length
2	2 53/64	19 7/8	11 3/16	6 3/8
3	4 3/32	24 1/2	16 1/4	6 1/2
3 1/2	4 39/64	24 5/8	16 1/2	6 1/2
4	5 17/32	24 7/8	16 7/8	6 1/2
5	6 11/32	24 1/2	18 1/2	6
6	7 15/32	26 1/2	20 1/2	6

Millimeters

Nominal Size of Fitting in Inches	OD Maximum Outside Diameter	LO Maximum Lay Length Open	LC Minimum Lay Length Closed	Available Expansion-contraction Length
2	71.8	504.8	284.2	161.9
3	104.0	622.3	412.8	165.1
3 1/2	117.1	625.5	419.1	165.1
4	140.5	631.8	428.6	165.1
5	161.1	622.3	469.9	152.4
6	189.7	673.1	520.7	152.4

Copyright National Electrical Manufacturers Association
Provided by IHS under license with NEMA
No reproduction or networking permitted without license from IHS
Not for Resale

Table 2-16
BENDS AND SWEEPS

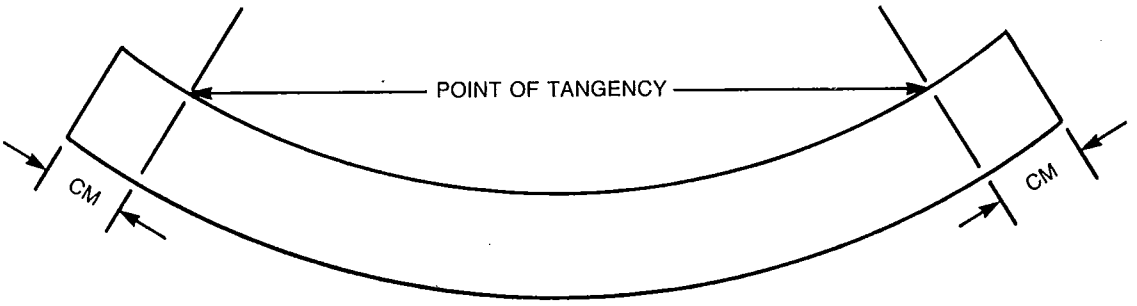

Nominal Size of Fitting in Inches	Radii, Degrees of Curvature, and Straight Tangent Lengths at End of Bends and Sweeps			
	45° and 90° Bends, Radius, Inches	22° and 30° Bends, Radius, Inches	22°, 30°, 45°, 90° Sweeps Radius, Feet	Minimum Straight Tangents Length at End, Inches Dimension CM
2	18, 24, 36, 48, 60	18, 24, 36, 48, 60	12½	2
3	18, 24, 30, 36, 48, 60	18, 24, 36, 48, 60	12½	3⅛
3½	18, 24, 36, 48, 60	18, 24, 36, 48, 60	12½	3¼
4	18, 24, 36, 48, 60	18, 24, 36, 48, 60	12½	3⅜
5	36, 48, 60	48, 60	12½	3⅝
6	48, 60	48, 60	12½	3¾

Nominal Size of Fitting in Inches	Radii, Degrees of Curvature, and Straight Tangent Lengths at End of Bends and Sweeps			
	45°, and 90° Bends, Radius, Meters	22° and 30° Bends, Radius, Meters	22°, 30°, 45°, 90° Sweeps, Radius, Meters	Minimum Straight Tangent Length at End, Millimeters Dimension CM
2	0.46, 0.61, 0.91, 1.22, 1.52	0.46, 0.61, 0.91, 1.22, 1.52	3.8	50.8
3	0.46, 0.61, 0.76, 0.91, 1.22, 1.52	0.46, 0.61, 0.91, 1.22, 1.52	3.8	79.4
3½	0.46, 0.61, 0.91, 1.22, 1.52	0.46, 0.61, 0.91, 1.22, 1.52	3.8	82.6
4	0.46, 0.61, 0.91, 1.22, 1.52	0.46, 0.61, 0.91, 1.22, 1.52	3.8	85.7
5	0.91, 1.22, 1.52	1.22, 1.52	3.8	92.1
6	1.22, 1.52	1.22, 1.52	3.8	95.2

Alternate Constructions—
1. Bends and sweeps may have a belled socket on one end with socket dimensions conforming to those of Table 3, or
2. Bends and sweeps may have a molded coupling on one end with socket dimensions conforming to those of Table 2.

Copyright National Electrical Manufacturers Association
Provided by IHS under license with NEMA
No reproduction or networking permitted without license from IHS
Not for Resale

Table 2-17
5-DEGREE ANGLE COUPLINGS

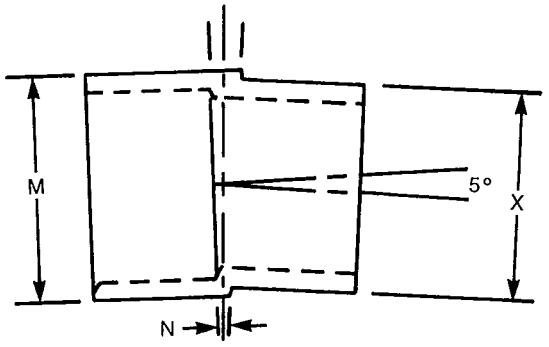

MOLDED SOCKET BY SPIGOT

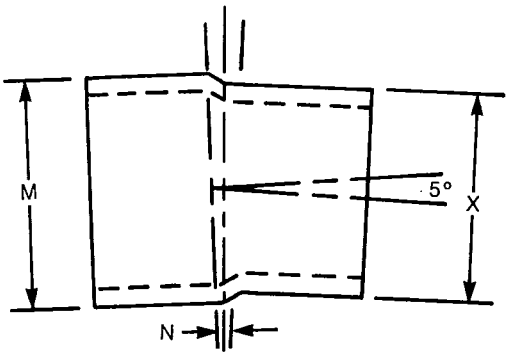

THERMOFORMED (FABRICATED)
SOCKET BY SPIGOT

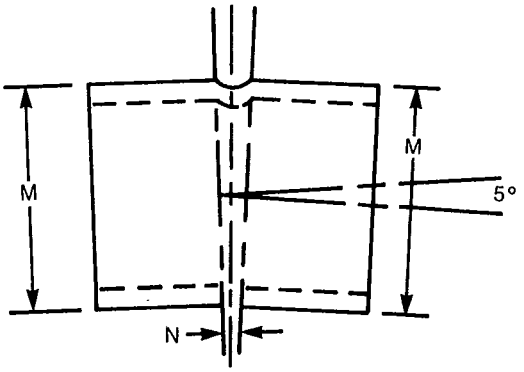

THERMOFORMED (FABRICATED)
SOCKET BY SOCKET

Inches

Nominal Size of Fitting in Inches	M Maximum	N Minimum	X Average	X Tolerance
2	2 9/16	1 1/8	2.375	± 0.006
3	3 23/32	1	3.500	± 0.008
4	4 51/64	14/64	4.500	± 0.009
5	5 59/64	15/64	5.563	± 0.010
6	7 1/64	9/16	6.625	± 0.011

Millimeters

Nominal Size of Fitting in Inches	M Maximum	N Minimum	X Average	X Tolerance
2	65.1	28.6	60.32	± 0.15
3	94.5	25.4	88.90	± 0.20
4	121.8	6.0	114.30	± 0.23
5	150.4	10.0	141.30	± 0.25
6	178.2	14.3	168.21	± 0.28

Copyright National Electrical Manufacturers Association
Provided by IHS under license with NEMA
No reproduction or networking permitted without license from IHS
Not for Resale

NEMA STANDARDIZATION

The purpose of NEMA Standards, their classification and status are set forth in certain clauses of the NEMA Bylaws, which are quoted below:

Purpose of Standards

National Electrical Manufacturers Association Standards are adopted in the public interest and are designed to eliminate misunderstandings between the manufacturer and the purchaser and to assist the purchaser in selecting and obtaining the proper product for its particular need. Existence of a National Electrical Manufacturers Association Standard does not in any respect preclude any member or nonmember from manufacturing or selling products not conforming to the standard.

(Bylaw—Art. V, Sec. 1)

Definition of a Standard

A standard of the National Electrical Manufacturers Association defines a product, process or procedure with reference to one or more of the following: nomenclature, composition, construction, dimensions, tolerances, safety, operating characteristics, performance, rating, testing, and the service for which they are designed.

(Bylaw—Art. V, Sec. 2, Subsection A)

Dimensions

Where dimensions are given for interchangeability purposes, alternate dimensions satisfying the other provisions of the standards publication may be capable of otherwise equivalent performance.

(NEMA Policy Memorandum 84-2, dated June 7, 1984)

Classes of Standards

National Electrical Manufacturers Association Standards are of two classes:

1. NEMA Standard, which relates to a product commercially standardized and subject to repetitive manufacture, which standard has been approved by at least 90 percent of the members of the Subdivision eligible to vote thereon;
2. Suggested Standard for Future Design, which may not have been regularly applied to a commercial product, but which suggests a sound engineering approach to future development, which standard has been approved by at least two-thirds of the members of the Subdivision eligible to vote thereon.

(Bylaw—Art. V, Sec. 2, Subsection B)

Authorized Engineering Information

Authorized Engineering Information consists of explanatory data and other engineering information of an informative character not falling within the classification of NEMA Standard or Suggested Standard for Future Design.

(Bylaw—Art. V, Sec. 6, 1st Sentence)

Official Standards Proposal

An Official Standards Proposal is an official draft of a proposed standard which is formally recommended to an outside organization(s) for consideration, comment and/or approval.

(Bylaw—Art. V, Sec. 4, Subsection A)

Identification of Status

Standards in NEMA Standards Publications are identified in the foreword or following each standard as "NEMA Standard" or "Suggested Standard for Future Design." These indicate the status of the standard. These words are followed by a date which indicates when the standard was adopted in its present form by the Association.

The material identified as "Authorized Engineering Information" and "Official Standards Proposal" is designated similarly.

Copyright National Electrical Manufacturers Association
Provided by IHS under license with NEMA
No reproduction or networking permitted without license from IHS
Not for Resale

PLASTIC CONDUIT, DUCT AND ACCESSORIES SECTION

OF THE

NATIONAL ELECTRICAL MANUFACTURERS ASSOCIATION

MEMBER COMPANIES

Can-Tex Industries
Mineral Wells, TX 76067

Carlon, Electrical Sciences, Inc.
Cleveland, OH 44122

Certainteed Corporation
Valley Forge, PA 19482

Challenger Electrical Materials, Inc.
Parkersburg, WV 26101

Formex Manufacturing, Inc.
Atlanta, GA 30362

Hercules Incorporated
Wilmington, DE 19899

Koch Fiberglass Products Company
Wichita, KS 67217

Midwest Plastic Fabricators, Inc.
Chagrin Falls, OH 44022

NVF Company
Fiber Glass Tubular Division
Houston, TX 77038

Robroy Industries, Inc.
Verona, PA 15147

A.O. Smith-Inland, Inc.
Little Rock, AR 72209

Underground Devices, Inc.
Glenview, IL 60025

Underground Products, Inc.
Troy, MI 48099-3230

Copyright National Electrical Manufacturers Association
Provided by IHS under license with NEMA
No reproduction or networking permitted without license from IHS
Not for Resale