STD·NEMA TC 9-ENGL 1999 6470247 0520692 1T7

NEMA STANDARDS PUBLICATION

TC 9

FITTINGS FOR PVC PLASTIC UTILITIES DUCT FOR UNDERGROUND INSTALLATION

NATIONAL ELECTRICAL MANUFACTURERS ASSOCIATION

Copyright National Electrical Manufacturers Association
Provided by IHS under license with NEMA
No reproduction or networking permitted without license from IHS
Not for Resale

NEMA Standards Publication TC 9-1999

Fittings for PVC Plastic Utilities Duct for Underground Installation

Published by:

National Electrical Manufacturers Association
1300 North 17th Street, Suite 1847
Arlington, VA 22209

© Copyright 1999 by the National Electrical Manufacturers Association. All rights including translation into other languages, reserved under the Universal Copyright Convention, the Berne Convention for the Protection of Literary and Artistic Works, and the International and Pan American Copyright Conventions.

Copyright National Electrical Manufacturers Association
Provided by IHS under license with NEMA
No reproduction or networking permitted without license from IHS
Not for Resale

Table of Contents

		Page
	Foreword	iii
Section 1	GENERAL	1
1.1	Scope	1
1.2	Referenced Standards	1
Section 2	DEFINITIONS AND ABBREVIATIONS	3
Section 3	GENERAL REQUIREMENTS	5
3.1	Materials	5
3.2	Trade Sizes	5
3.3	Dimensions	5
3.4	Workmanship	5

Tables

Table 3-1	Fittings	5
Table 3-2	Sockets for Molded Fittings	6
Table 3-3	Sockets for Thermoformed (Fabricated) Fittings	7
Table 3-4	Couplings	8
Table 3-5	Terminal Adapters	8
Table 3-6	Female Adapters	9
Table 3-7	Socket End Bell (Molded)	9
Table 3-8	Socket End Bell (Fabricated)	10
Table 3-9	Domed Cap	10
Table 3-10	Flat Cap	11
Table 3-11	Fitting Plug	12
Table 3-12	Duct Plug, Tapered	12
Table 3-13	Fiber Conduit Adapter	13
Table 3-14	Cement Asbestos Conduit Adapter	13
Table 3-15	Bends and Sweeps	14
Table 3-16	5-Degree Angle Couplings	15

Copyright National Electrical Manufacturers Association
Provided by IHS under license with NEMA
No reproduction or networking permitted without license from IHS

Not for Resale

Foreword

The purpose of this standard for fittings for plastic utilities duct for underground installation is:

a. To list dimensions and other significant requirements; and
b. To set forth some of the properties of this product and to assist in selecting and obtaining the proper product for a particular need.

User needs have been considered throughout the development of this standard. Test methods and performance values have been related as closely as possible to end-use applications.

The Polymer Raceway Products Section of NEMA, through its members, has worked (and continues to work) closely with such organizations as the American Society for Testing and Materials, the Plastic Pipe Institute, appropriate government agencies, and others in the periodic review and revision of this standard for any changes necessary to keep them up-to-date with advancing technology. Proposed or recommended revisions should be submitted to:

Vice President, Engineering
National Electrical Manufacturers Association
1300 North 17th Street, Suite 1847
Rosslyn, VA 22209

This Standards Publication was developed by the Polymer Raceway Products Section. Section approval of the standard does not necessarily imply that all section members voted for its approval or participated in its development. At the time it was approved, the Group/Section was composed of the following members:

CANTEX, INC.
Mineral Wells, TX

Carlon, Lamson & Sessions
Cleveland, OH

PW Pipe
Eugene, OR

TC 9-1999 supersedes TC 9-1990.

Previous page

is blank

Copyright National Electrical Manufacturers Association
Provided by IHS under license with NEMA
No reproduction or networking permitted without license from IHS

Not for Resale

Section 1
GENERAL

1.1 Scope

This standard covers the following types of fittings for PVC plastic utilities duct used for the underground installation of communication and electrical wire and cable:

a. Type EB—Designed for encased burial in concrete when installed in trenches underground.

b. Type DB—Designed for direct burial in trenches underground without a requirement for encasement in concrete. Type DB may also be encased in concrete.

NOTE—The values stated in U.S. customary units are to be regarded as the standard.

1.2 Referenced Standards

In this publication, reference is made to the following ASTM standards. The latest editions shall be used. Copies are available from the indicated sources.

American Society for Testing and Materials
100 Barr Harbor Drive
West Conshohocken, PA 19428-2959

D 883	*Standard Terminology Relating to Plastics*
D 1600	*Standard Terminology for Abbreviated Terms Relating to Plastics*
D 1784	*Specification for Rigid Poly(Vinyl Chloride) (PVC) Compounds*
D 2749	*Standard Symbols for Dimensions of Plastic Pipe Fittings*
D 4396	*Standard Specification for Rigid Poly (Vinyl Chloride) (PVC) and Related Plastic Compounds for Non-Pressure Piping Products*
F 412	*Standard Terminology Relating to Plastic Piping Systems*

Copyright National Electrical Manufacturers Association
Provided by IHS under license with NEMA
No reproduction or networking permitted without license from IHS
Not for Resale

Section 2
DEFINITIONS AND ABBREVIATIONS

2.1 Definitions of terms used in this standard shall be in accordance with ASTM F 412 or ASTM D 883, or both. Abbreviations shall be in accordance with ASTM D 1660. Dimensional symbols shall be in accordance with ASTM D 2749, unless otherwise specified.

Previous page

is blank

Copyright National Electrical Manufacturers Association
Provided by IHS under license with NEMA
No reproduction or networking permitted without license from IHS

Not for Resale

Section 3
GENERAL REQUIREMENTS

3.1 MATERIALS

Fittings shall be fabricated from extruded stock or shall be molded. Molded fittings shall be made from a polyvinyl chloride compound that meets cell classification PVC 11232 as defined in ASTM D 4396. Extruded stock shall meet the requirements of NEMA Standard TC 6 & 8, *PVC Plastic Utilities Duct for Underground Installations.*

3.2 TRADE SIZES

The trade sizes (metric designators) of fittings shall be 2, 3, 3-1/2, 4, 5, and 6 inches (53,78,91,103,129, and 155).

NOTE—For sizes less than 2 refer to NEMA TC 3.

3.3 DIMENSIONS

The dimensions of fittings shall be as shown in Tables 3-1 through 3-16 when measured at the point of manufacture.

3.4 WORKMANSHIP

Plastic duct fittings shall be homogeneous throughout and free from visible cracks, holes, burrs, foreign inclusions, or other defects at the point of manufacture.

Table 3-1
FITTINGS

Type of Fitting	Metric Designators	Trade Size
Couplings Caps, plugs Female and terminal adapters End bells Sweeps and bends, 22°, 30°, 45°, 90°	53,78,91,103,129,155	2,3,3-1/2,4,5,6
5-Degree angle couplings	53,78,103,129,155	2,3,4,5,6
Adapters to fiber conduit	53,78,103	2,3,4
Adapters to cement asbestos conduit	53,78,103	2,3,4

Previous page is blank

Copyright National Electrical Manufacturers Association
Provided by IHS under license with NEMA
No reproduction or networking permitted without license from IHS
Not for Resale

Copyright National Electrical Manufacturers Association
Provided by IHS under license with NEMA
No reproduction or networking permitted without license from IHS

STD-NEMA TC 9-ENGL 1999 ■ 6470247 0520699 551 ■

Table 3-2
SOCKETS FOR MOLDED FITTINGS

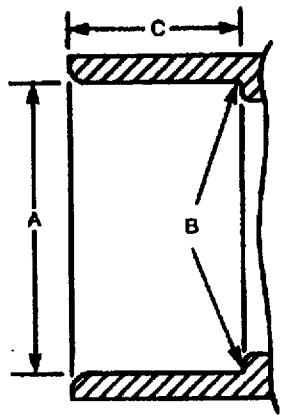

Metric Designator	Trade Size	A Socket Entrance Inside Diameter Average	A Tolerance On Average	A Out-Of-Roundness Tolerance On Average	B Socket Bottom Inside Diameter Average	B Tolerance On Average	B Out-Of-Roundness Tolerance On Average	C Minimum Socket Depth
U. S. Customary Units (in)								
53	2	2.393	±0.006	±0.012	2.369	±0.006	±0.012	1.125
78	3	3.515	±0.008	±0.015	3.492	±0.008	±0.015	1.594
91	3-1/2	4.015	±0.008	±0.050	3.992	±0.008	±0.015	1.687
103	4	4.515	±0.009	±0.050	4.491	±0.009	±0.015	1.750
129	5	5.593	±0.010	±0.050	5.553	±0.010	±0.030	1.937
155	6	6.658	±0.011	±0.050	6.614	±0.011	±0.030	2.215
Metric Units (mm)								
53	2	60.78	±0.15	±0.30	60.17	±0.15	±0.30	28.58
78	3	89.28	±0.20	±0.38	88.70	±0.20	±0.38	40.49
91	3-1/2	101.98	±0.20	±1.27	101.40	±0.20	±0.38	42.85
103	4	114.68	±0.23	±1.27	114.07	±0.23	±0.38	44.45
129	5	142.06	±0.25	±1.27	141.05	±0.25	±0.76	49.20
155	6	169.11	±0.28	±1.27	168.00	±0.28	±0.76	53.98

NOTE—Metal circular GO/NO-GO plug gauges machined to the minimum and maximum average inside diameters given in the table may be used to check dimensions A and B. (This note has been approved as Authorized Engineering Information.)

Not for Resale

Copyright National Electrical Manufacturers Association
Provided by IHS under license with NEMA
No reproduction or networking permitted without license from IHS
Not for Resale

STD·NEMA TC 9-ENGL 1999 ■ 6470247 0520700 0T3 ■

Table 3-3
SOCKETS FOR THERMOFORMED (FABRICATED) FITTINGS

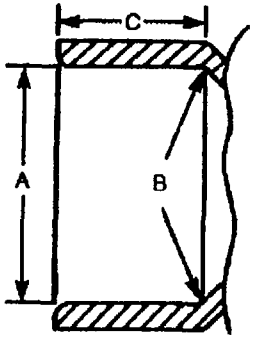

Metric Designator	Trade Size	A Socket Entrance Inside Diameter Average	A Tolerance On Average	A Out-Of-Roundness Tolerance On Average	B Socket Bottom Inside Diameter Average	B Tolerance On Average	B Out-Of-Roundness Tolerance On Average	C Minimum Socket Depth
U. S. Customary Units (in)								
53	2	2.400	±0.006	±0.030	2.381	±0.006	±0.030	1.750
78	3	3.538	±0.008	±0.030	3.508	±0.008	±0.030	2.875
91	3-1/2	4.041	±0.008	±0.050	4.008	±0.008	±0.050	3.125
103	4	4.544	±0.009	±0.050	4.509	±0.009	±0.050	3.375
129	5	5.614	±0.010	±0.050	5.573	±0.010	±0.050	4.000
155	6	6.687	±0.011	±0.050	6.636	±0.011	±0.050	5.000
Metric Units (mm)								
53	2	60.96	±0.15	±0.76	60.48	±0.15	±0.76	44.45
78	3	89.87	±0.20	±0.76	89.10	±0.20	±0.76	73.02
91	3-1/2	102.64	±0.20	±1.27	101.80	±0.20	±1.27	79.38
103	4	115.42	±0.23	±1.27	114.53	±0.23	±1.27	85.72
129	5	142.06	±0.25	±1.27	141.55	±0.25	±1.27	101.60
155	6	169.85	±0.28	±1.27	168.55	±0.28	±1.27	127.00

NOTE—Metal circular GO/NO-GO plug gauges machined to the minimum and maximum average inside diameters given in the table may be used to check dimensions A and B. (This note has been approved as Authorized Engineering Information.)

Table 3-4
COUPLINGS

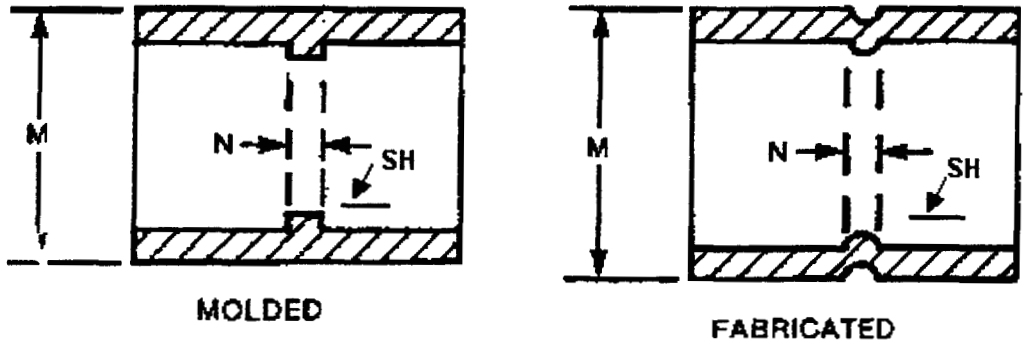

Metric Designator	Trade Size	U. S. Customary (in)			Metric Units (mm)		
		M, Maximum	SH, Maximum	N, Minimum	M, Maximum	SH, Maximum	N, Minimum
53	2	2-47/64	0.075	3/32	69.5	1.90	2.4
78	3	3-31/32	0.076	7/64	100.8	1.93	2.8
91	3-1/2	4-1/2	0.087	7/64	114.3	2.21	2.8
103	4	5-1/32	0.097	7/64	127.8	2.46	2.8
129	5	6-1/4	0.118	9/64	158.8	3.00	3.6
155	6	7-1/2	0.140	9/64	190.5	3.56	3.6

Table 3-5
TERMINAL ADAPTERS

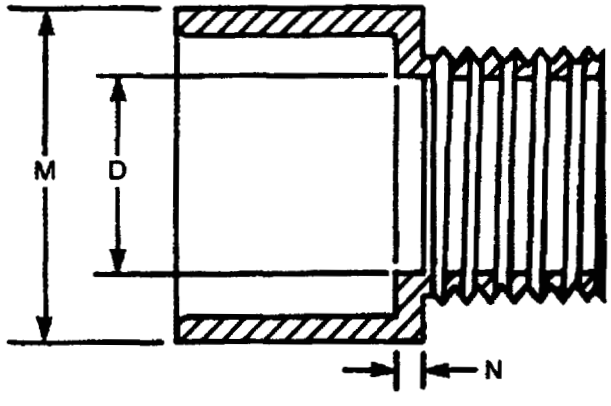

Metric Designator	Trade Size	U. S. Customary (in)			Metric Units (mm)		
		M, Maximum	D, Minimum	N, Minimum	M, Maximum	D, Minimum	N, Minimum
53	2	2-59/64	1.964	5/32	74.2	49.89	4.0
78	3	4-1/16	2.915	15/64	103.2	74.04	6.0
91	3-1/2	4-19/32	3.371	1/4	116.7	85.62	6.4
103	4	5-1/8	3.825	1/4	130.2	97.16	6.4
129	5	6-9/32	4.795	19/64	159.6	121.79	7.5
155	6	7-1/2	5.762	17/64	190.5	146.35	6.7

Copyright National Electrical Manufacturers Association
Provided by IHS under license with NEMA
No reproduction or networking permitted without license from IHS
Not for Resale

Table 3-6
FEMALE ADAPTERS

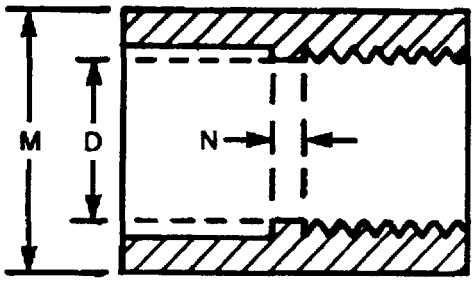

Metric Designator	Trade Size	U. S. Customary Units (in)			Metric Units (mm)		
		M, Maximum	D, Minimum	N, Minimum	M, Maximum	D, Minimum	N, Minimum
53	2	2-27/32	1.964	5/64	72.2	49.89	2.0
78	3	3-31/32	2.915	11/64	100.8	74.04	4.4
91	3-1/2	4-37/64	3.371	11/64	116.3	85.62	4.4
103	4	5-7/64	3.825	11/64	129.8	97.16	4.4
129	5	6-9/32	4.795	15/64	159.6	121.79	6.0
155	6	7-33/64	5.762	15/64	190.9	146.35	6.0

Table 3-7
SOCKET END BELL (MOLDED)

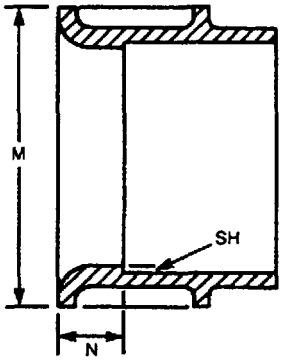

Metric Designator	Trade Size	U. S. Customary Units (in)			Metric Units (mm)		
		M, Maximum	SH, Maximum	N, Minimum	M, Maximum	SH, Maximum	N, Minimum
53	2	3-7/64	0.075	5/16	79.0	1.90	7.9
78	3	4-1/8	0.076	5/16	104.8	1.93	7.9
91	3-1/2	4-5/8	0.087	5/16	117.5	2.21	7.9
103	4	5-11/32	0.097	7/16	135.7	2.46	11.1
129	5	6-13/32	0.118	7/16	162.7	3.00	11.1
155	6	7-13/32	0.140	7/16	188.1	3.56	11.1

Copyright National Electrical Manufacturers Association
Provided by IHS under license with NEMA
No reproduction or networking permitted without license from IHS
Not for Resale

Table 3-8
SOCKET END BELL (FABRICATED)

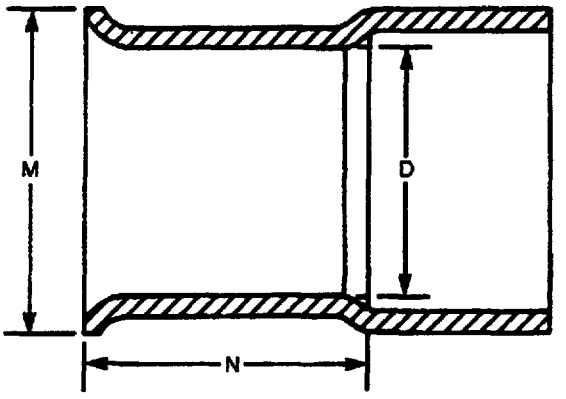

Metric Designator	Trade Size	U. S. Customary Units (in)			Metric Units (mm)		
		M, Maximum	D, Minimum	N, Minimum	M, Maximum	D, Minimum	N, Minimum
53	2	4-9/32	2.173	2-25/32	108.7	55.19	70.6
78	3	5-9/32	3.208	2-15/16	134.1	81.48	74.6
91	3-1/2	4-3/4	3.668	3	120.6	93.17	76.2
103	4	5-1/2	4.129	3	139.7	104.88	76.2
120	5	6-1/2	5.195	4-1/4	165.1	131.95	108.0
155	6	7-1/2	6.192	3-1/4	190.5	157.28	82.6

Table 3-9
DOMED CAP

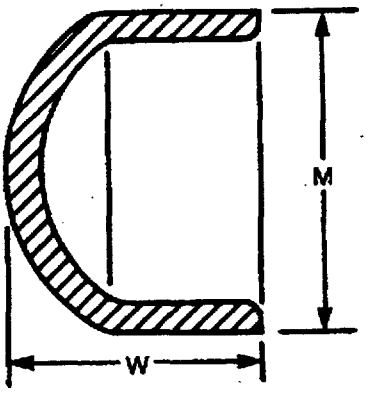

Metric Designator	Trade Size	U. S. Customary Units (in)		Metric Units (mm)	
		W, Maximum	M, Maximum	W, Maximum	M, Maximum
53	2	2-3/32	2-13/16	53.2	71.4
78	3	3	4-3/32	76.2	104.0
91	3-1/2	3-1/8	4-5/8	79.4	117.5
103	4	3-31/64	5-13/64	88.4	137.3
129	5	4-27/64	6-1/4	112.3	158.8
155	6	5-7/32	7-25/64	132.6	187.7

Copyright National Electrical Manufacturers Association
Provided by IHS under license with NEMA
No reproduction or networking permitted without license from IHS
Not for Resale

Table 3-10
FLAT CAP

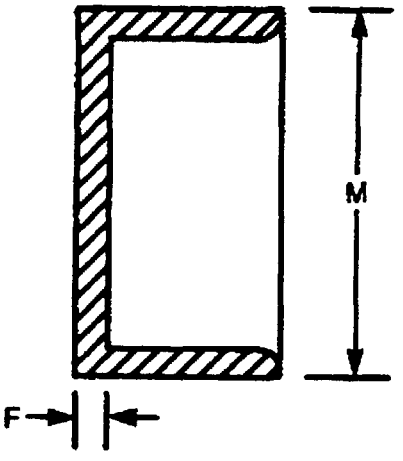

Metric Designator	Trade Size	U. S. Customary Units (in)		Metric Units (mm)	
		F, Minimum	M, Maximum	F, Minimum	M, Maximum
53	2	1/16	2-35/64	1.5	64.7
78	3	1/16	3-45/64	1.6	94.1
91	3-1/2	5/64	4-7/32	2.0	107.2
103	4	3/32	4-3/4	2.4	120.6
129	5	3/32	5-53/64	2.4	148.0
155	6	1/8	6-61/64	3.2	176.6

Copyright National Electrical Manufacturers Association
Provided by IHS under license with NEMA
No reproduction or networking permitted without license from IHS

Not for Resale

Table 3-11
FITTING PLUG

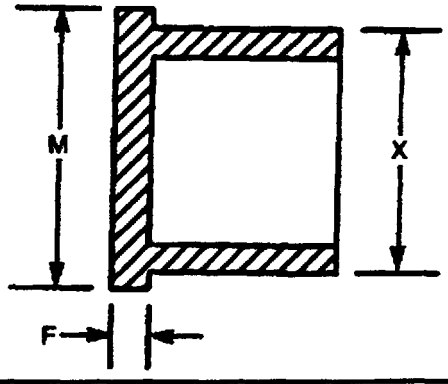

Metric Designator	Trade Size	U. S. Customary Units (in)				Metric Units (mm)			
		M, Maximum	F, Minimum	X, Average	X, Tolerance	M, Maximum	F, Minimum	X, Average	X, Tolerance
53	2	2-19/32	23/64	2.375	±0.006	65.9	9.1	60.32	±0.15
78	3	3-21/32	23/64	3.000	±0.008	92.9	9.1	88.90	±0.20
91	3-1/2	4-9/32	23/64	3.500	±0.008	108.7	9.1	101.60	±0.20
103	4	4-25/32	23/64	4.500	±0.009	121.4	9.1	114.30	±0.23
129	5	5-21/32	13/32	5.563	±0.010	143.7	10.3	141.30	±0.25
155	6	...	...	...	...	...	...	...	...

Table 3-12
DUCT PLUG, TAPERED

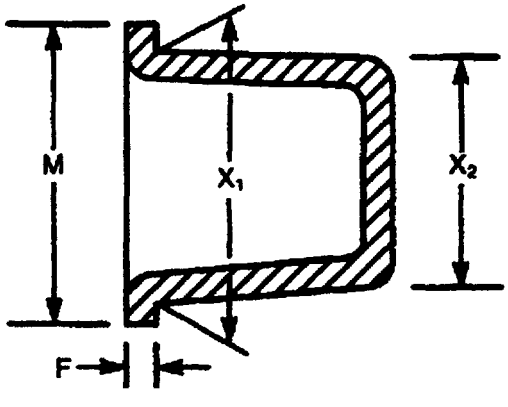

Metric Designator	Trade Size	U. S. Customary Units (in)				Metric Units (mm)			
		M, Maximum	X_1, Minimum	X_2, Maximum	F, Minimum	M, Maximum	X_1, Minimum	X_2, Maximum	F, Minimum
53	2	3-13/64	2.500	1-7/8	7/64	81.4	63.5	47.6	2.8
78	3	4	3.550	2-7/8	1/8	101.6	90.1	73.0	3.2
91	3-1/2	4-9/16	4.050	3-3/8	7/64	115.9	102.9	85.7	2.8
103	4	5-3/16	4.550	3-27/32	7/64	131.8	115.5	97.6	2.8
129	5	6-9/32	5.750	4-7/8	7/64	159.5	146.0	123.8	2.8
155	6	6-7/8	6.703	5-7/8	5/64	174.6	170.3	149.2	2.0

Copyright National Electrical Manufacturers Association
Provided by IHS under license with NEMA
No reproduction or networking permitted without license from IHS
Not for Resale

Table 3-13
FIBER CONDUIT ADAPTER

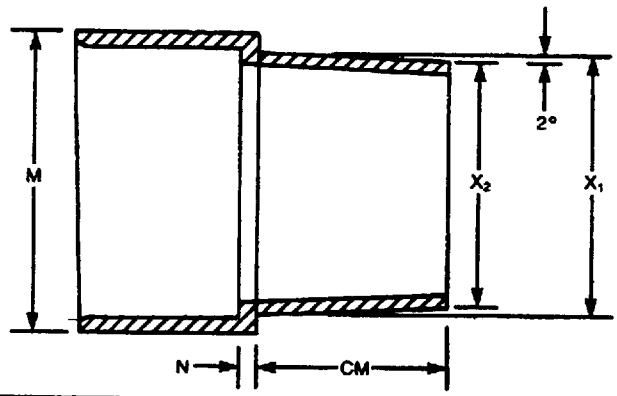

Metric Designator	Trade Size	U. S. Customary Units (in)					Metric Units (mm)				
		M Maximum	N Minimum	CM Nominal	X_1 Nominal	X_2 Nominal	M Maximum	N Minimum	CM Nominal	X_1 Nominal	X_2 Nominal
53	2	2-3/4	5/64	1-7/16	2.470	2-25/64	69.8	2.0	36.5	62.74	60.7
78	3	4	9/64	1-11/16	3.448	3-11/32	101.6	3.6	42.9	87.58	84.9
103	4	5-3/4	11/64	1-15/16	4.375	4-31/64	146.0	4.4	49.2	120.6	114.12

Table 3-14
CEMENT ASBESTOS CONDUIT ADAPTER

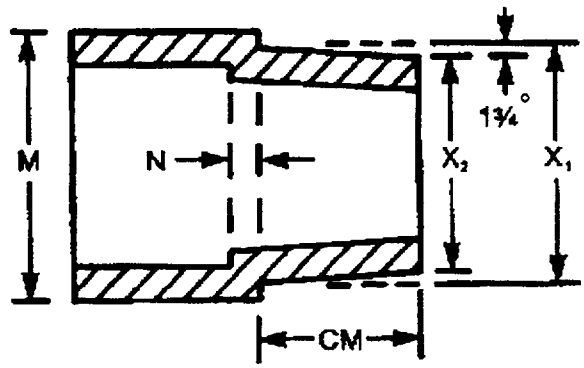

Metric Designator	Trade Size	U. S. Customary Units (in)					Metric Units (mm)				
		M Maximum	N Minimum	CM Nominal	X_1 Nominal	X_2 Nominal	M Maximum	N Minimum	CM Nominal	X_1 Nominal	X_2 Nominal
53	2	2-3/4	5/64	1-3/4	2.580	2-1/3	69.8	2.0	44.4	65.5	63.5
78	3	4	5/64	1-3/4	3.620	3-17/32	101.6	2.0	44.4	91.9	89.7
103	4	5-1/32	11/64	2	4.620	4-33/64	127.8	4.4	50.8	117.3	114.7

Copyright National Electrical Manufacturers Association
Provided by IHS under license with NEMA
No reproduction or networking permitted without license from IHS

Not for Resale

Table 3-15
BENDS AND SWEEPS

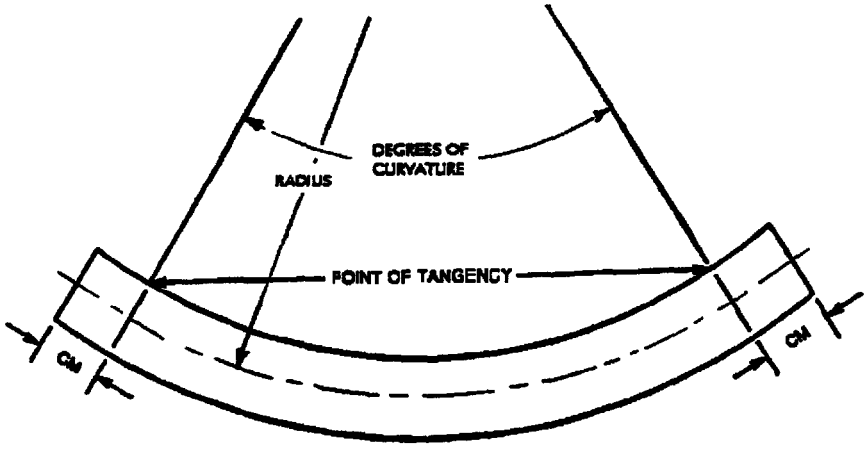

Metric Designator	Trade Size	Radii, Degrees of Curvature, and Straight Tangent Lengths at End of Bends and Sweeps U.S. Customary Units: 45° and 90° Bends, Radius	22.5° and 30° Bends, Radius	22.5°, 30°, 45°, 90° Sweeps, Radius	Minimum Straight Tangents Length at End Dimension CM	Metric Units: 45° and 90° Bends, Radius	22.5° and 30° Bends, Radius	22.5°, 30°, 45°, 90° Sweeps, Radius	Minimum Straight Tangents Length at End, Dimension CM
		Inches	Inches	Feet	Inches	Meters	Meters	Meters	Millimeters
53	2	18, 24, 36, 48, 60	18, 24, 36, 48, 60	12-1/2	2	0.46, 0.61, 0.91, 1.22, 1.52	0.46, 0.61, 0.91, 1.22, 1.52	3.8	50.8
78	3	18, 24, 30, 36, 48, 60	18, 24, 30, 36, 48, 60	12-1/2	3-1/8	0.46, 0.61, 0.76, 0.91, 1.22, 1.52	0.46, 0.61, 0.76, 0.91, 1.22, 1.52	3.8	79.4
91	3-1/2	18, 24, 36, 48, 60	18, 24, 36, 48, 60	12-1/2	3-1/4	0.46, 0.61, 0.91, 1.22, 1.52	0.46, 0.61, 0.91, 1.22, 1.52	3.8	82.6
103	4	36, 48, 60	18, 24, 36, 48, 60	12-1/2	3-3/8	0.91, 1.22, 1.52	0.46, 0.61, 0.91, 1.22, 1.52	3.8	85.7
129	5	36, 48, 60	48, 60	12-1/2	3-5/8	0.91, 1.22, 1.52	1.22, 1.52	3.8	92.1
155	6	48, 60	48, 60	12-1/2	3-3/4	1.22, 1.52	1.22, 1.52	3.8	95.2

Alternate Constructions—

a. Bends and sweeps may have a belled socket on one end with socket dimensions conforming to those of Table 3-3; or

b. Bends and sweeps may have a molded coupling on one end with socket dimensions conforming to those of Table 3-2.

Copyright National Electrical Manufacturers Association
Provided by IHS under license with NEMA
No reproduction or networking permitted without license from IHS
Not for Resale

Table 3-16
5-DEGREE ANGLE COUPLINGS

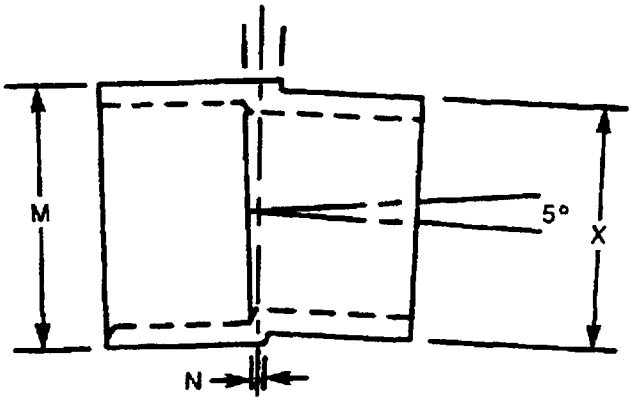

Molded Bell by Spigot

Metric Designator	Trade Size	U. S. Customary Units (in)				Metric Units (mm)			
		M Maximum	N Minimum	X Average	X Tolerance	M Maximum	N Minimum	X Average	X Tolerance
53	2	2-9/16	3/16	2.375	±0.006	65.1	4.8	60.32	±0.15
78	3	3-3/32	7/32	3.500	±0.008	94.5	5.6	88.90	±0.20
103	4	4-51/64	14/64	4.500	±0.009	121.8	6.0	114.30	±0.23
129	5	5-59/64	15/64	5.563	±0.010	150.4	10.0	141.30	±0.25
155	6	7-1/64	9/16	6.625	±0.011	178.2	14.3	168.21	±0.28

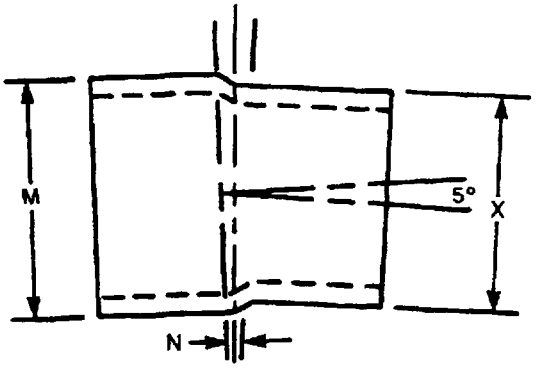

Thermoformed (Fabricated) Bell by Spigot

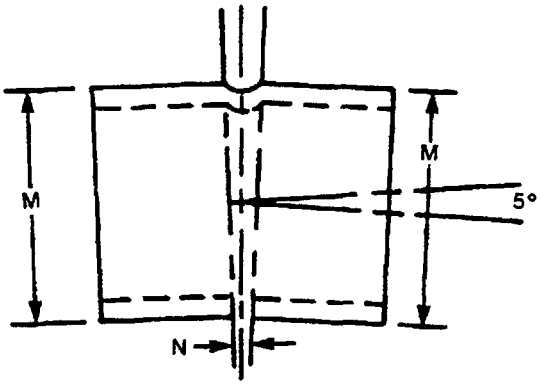

Thermoformed (Fabricated) Bell by Bell

Copyright National Electrical Manufacturers Association
Provided by IHS under license with NEMA
No reproduction or networking permitted without license from IHS
Not for Resale