NEMA TC*9 90 ■ 6470247 0020189 4 ■

NEMA STANDARDS PUBLICATION NO. TC 9

nema

Fittings for ABS and PVC Plastic Utilities Duct for Underground Installation

NEMA

NATIONAL ELECTRICAL MANUFACTURERS ASSOCIATION ● 2101 L STREET, N.W., WASHINGTON, D.C. 20037

Copyright National Electrical Manufacturers Association
Provided by IHS under license with NEMA
No reproduction or networking permitted without license from IHS
Not for Resale

NEMA TC*9 90 ■ 6470247 0020190 0 ■

NEMA TC 9-1990

TC 9

FITTINGS FOR ABS AND PVC PLASTIC UTILITIES DUCT FOR UNDERGROUND INSTALLATION

Published by:

National Electrical Manufacturers Association
2101 L Street, N.W.
Washington, DC 20037

© 1990 by National Electrical Manufacturers Association

Copyright National Electrical Manufacturers Association
Provided by IHS under license with NEMA
No reproduction or networking permitted without license from IHS

Not for Resale

TABLE OF CONTENTS

		Page
	FOREWORD	i
	SCOPE	ii
Section 1	REFERENCED STANDARDS	1
Section 2	GENERAL	
	Definitions, Abbreviations, and Dimension Symbols	2
	Materials	2
	Nominal Sizes	2
	Dimensions	2
	Workmanship	2
Table 2-1	Fittings	2
Table 2-2	Sockets for Molded Fittings	3
Table 2-3	Sockets for Thermoformed (Fabricated) Fittings	4
Table 2-4	Couplings	5
Table 2-5	Terminal Adapters	5
Table 2-6	Female Adapters	6
Table 2-7	Socket End Bell	6
Table 2-8	Socket End Bell	7
Table 2-9	Domed Cap	7
Table 2-10	Flat Cap	8
Table 2-11	Fitting Plug	8
Table 2-12	Duct Plug, Tapered	9
Table 2-13	Fiber Conduit Adapter	9
Table 2-14	Cement Asbestos Conduit Adapter	10
Table 2-15	Watertight Expansion Coupling	10
Table 2-16	Bends and Sweeps	11
Table 2-17	5-Degree Angle Couplings	12

Copyright National Electrical Manufacturers Association
Provided by IHS under license with NEMA
No reproduction or networking permitted without license from IHS
Not for Resale

Foreword

The purpose of these standards for fittings for plastic utilities duct for underground installation is:

1. To list dimensions and other significant requirements.
2. To set forth some of the properties of this product and to assist in selecting and obtaining the proper product for a particular need.

User needs have been considered throughout the development of these standards. Test methods and performance values have been related as closely as possible to end-use applications.

The Plastic Conduit, Duct, and Accessories Section of NEMA, through its members, has worked (and continues to work) closely with such organizations as the American Society for Testing and Materials, the Plastic Pipe Institute, appropriate government agencies, and others in the periodic review and revision of these standards for any changes necessary to keep them up-to-date with advancing technology. Proposed or recommended revisions should be submitted to:

Vice President, Engineering
National Electrical Manufacturers Association
2101 L Street, N.W.
Washington, DC 20037

TC 9-1990 supersedes TC 9-1983.

Copyright National Electrical Manufacturers Association
Provided by IHS under license with NEMA
No reproduction or networking permitted without license from IHS
Not for Resale

Scope

These standards cover the following types of fittings for ABS and PVC plastic utilities duct used for the underground installation of communication and electrical wire and cable:

Type EB – Designed for encased burial in concrete when installed in trenches underground.

Type DB – Designed for direct burial in trenches underground without a requirement for encasement in concrete.

NOTE – The values stated in U.S. customary units are to be regarded as the standard.

Copyright National Electrical Manufacturers Association
Provided by IHS under license with NEMA
No reproduction or networking permitted without license from IHS
Not for Resale

FITTINGS FOR ABS AND PVC PLASTIC UTILITIES DUCT FOR UNDERGROUND INSTALLATION

Section 1
REFERENCED STANDARDS

In this publication, reference is made to the following ASTM standards. The latest editions shall be used. Copies are available from the indicated sources.

American Society for Testing and Materials
1916 Race Street
Philadelphia, PA 19103

D 883-1989	*Definitions of Terms Relating to Plastics*
D 1600-1986a	*Abbreviations of Terms Relating to Plastics*
D 1788-1981	*Rigid Acrylonitrile-Butadiene-Styrene (ABS) Plastics*
D 2749-1968 (1989)	*Symbols for Dimensions of Plastic Pipe Fittings*
D 4396-1984	*Specifications for Rigid Poly (Vinyl Chloride) (PVC) and Related Plastic Compounds for Non-Pressure Piping Products*
F 412-1989	*Definitions of Terms Relating to Plastic Piping Systems*

--`,,`,,`-`-`,,`,,`,`,,`---

Copyright National Electrical Manufacturers Association
Provided by IHS under license with NEMA
No reproduction or networking permitted without license from IHS

Not for Resale

Section 2
GENERAL

2.1 DEFINITIONS, ABBREVIATIONS, AND DIMENSION SYMBOLS

Definitions for plastic utilities duct fittings shall be in accordance with ASTM D 883, abbreviations shall be in accordance with ASTM D 1600, and dimension symbols shall be in accordance with ASTM D 2749, unless otherwise specified.

NEMA Standard 1-14-1975.

2.2 MATERIALS

ABS plastic duct fittings shall be made from an acrylonitrile-butadiene-styrene (ABS) compound that meets cell classification ABS-1-2-3 as defined in ASTM D 1788.

PVC plastic duct fittings shall be made from a polyvinyl chloride compound that meets cell classification PVC 11232 as defined in ASTM D 4396.

NEMA Standard 1-14-1975.

Other ABS or PVC compounds which have a different cell classification because one or more properties are superior to those of the compounds specified above may also be used.

Reworked material may be used provided that the fittings produced meet all of the requirements of these standards.

Authorized Engineering Information 1-14-1975.

2.3 NOMINAL SIZES

The nominal sizes of fittings shall be 2, 3, 3½, 4, 5, and 6 inches.

NEMA Standard 1-14-1975.

2.4 DIMENSIONS

The dimensions of fittings shall be as shown in Tables 2-1 through 2-17 when measured at the point of manufacture.

NEMA Standard 1-14-1975.

2.5 WORKMANSHIP

Plastic duct fittings shall be homogeneous throughout and free from visible cracks, holes, burrs, foreign inclusions, or other defects at the point of manufacture.

NEMA Standard 1-14-1975.

Table 2-1
FITTINGS

Type of Fitting	Nominal Size, Inches
Couplings Caps, plugs Female and terminal adapters End bells Expansion couplings Sweeps and bends, 22°, 30°, 45°, 90°	2, 3, 3½, 4, 5, 6
5-Degree angle couplings	2, 3, 4, 5, 6
Adapters to fiber conduit	2, 3, 4
Adapters to cement asbestos conduit	2, 3, 4

Copyright National Electrical Manufacturers Association
Provided by IHS under license with NEMA
No reproduction or networking permitted without license from IHS

Not for Resale

Table 2-2
SOCKETS FOR MOLDED FITTINGS

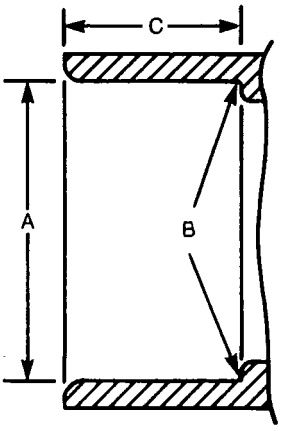

	Inches						
	A			B			C
	Socket Entrance Inside Diameter			Socket Bottom Inside Diameter			
Nominal Size of Fitting in Inches	Average	Tolerance on Average	Out-of-roundness Tolerance on Average	Average	Tolerance on Average	Out-of-roundness Tolerance on Average	Minimum Socket Depth
2	2.393	±0.006	±0.012	2.369	±0.006	±0.012	1.125
3	3.515	±0.008	±0.015	3.492	±0.008	±0.015	1.594
3½	4.015	±0.008	±0.050	3.992	±0.008	±0.015	1.687
4	4.515	±0.009	±0.050	4.491	±0.009	±0.015	1.750
5	5.593	±0.010	±0.050	5.553	±0.010	±0.030	1.937
6	6.658	±0.011	±0.050	6.614	±0.011	±0.030	2.215

	Millimeters						
	A			B			C
	Socket Entrance Inside Diameter			Socket Bottom Inside Diameter			
Nominal Size of Fitting in Inches	Average	Tolerance on Average	Out-of-roundness Tolerance on Average	Average	Tolerance on Average	Out-of-roundness Tolerance on Average	Minimum Socket Depth
2	60.78	±0.15	±0.30	60.17	±0.15	±0.30	28.58
3	89.28	±0.20	±0.38	88.70	±0.20	±0.38	40.49
3½	101.98	±0.20	±1.27	101.40	±0.20	±0.38	42.85
4	114.68	±0.23	±1.27	114.07	±0.23	±0.38	44.45
5	142.06	±0.25	±1.27	141.05	±0.25	±0.76	49.20
6	169.11	±0.28	±1.27	168.00	0.28	±0.76	53.98

NOTE—Metal circular GO/NO-GO plug gauges machined to the minimum and maximum average inside diameters given in the table may be used to check dimensions A and B. (This note has been approved as Authorized Engineering Information.)

Copyright National Electrical Manufacturers Association
Provided by IHS under license with NEMA
No reproduction or networking permitted without license from IHS

Not for Resale

Table 2-3
SOCKETS FOR THERMOFORMED (FABRICATED) FITTINGS

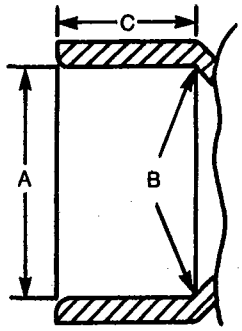

	Inches						
	A			B			C
	Socket Entrance Inside Diameter			Socket Bottom Inside Diameter			
Nominal Size of Fitting in Inches	Average	Tolerance on Average	Out-of-roundness Tolerance on Average	Average	Tolerance on Average	Out-of-roundness Tolerance on Average	Minimum Socket Depth
2	2.400	±0.006	±0.030	2.381	±0.006	±0.030	1.750
3	3.538	±0.008	±0.030	3.508	±0.008	±0.030	2.875
3½	4.041	±0.008	±0.050	4.008	±0.008	±0.050	3.125
4	4.544	±0.009	±0.050	4.509	±0.009	±0.050	3.375
5	5.614	±0.010	±0.050	5.573	±0.010	±0.050	4.000
6	6.687	±0.011	±0.050	6.636	±0.011	±0.050	5.000

	Millimeters						
	A			B			C
	Socket Entrance Inside Diameter			Socket Bottom Inside Diameter			
Nominal Size of Fitting in Inches	Average	Tolerance on Average	Out-of-roundness Tolerance on Average	Average	Tolerance on Average	Out-of-roundness Tolerance on Average	Minimum Socket Depth
2	60.96	±0.15	±0.76	60.48	±0.15	±0.76	44.45
3	89.87	±0.20	±0.76	89.10	±0.20	±0.76	73.02
3½	102.64	±0.20	±1.27	101.80	±0.20	±1.27	79.38
4	115.42	±0.23	±1.27	114.53	±0.23	±1.27	85.72
5	142.60	±0.25	±1.27	141.55	±0.25	±1.27	101.60
6	169.85	±0.28	±1.27	168.55	±0.28	±1.27	127.00

NOTE—Metal circular GO/NO-GO plug guages machined to the minimum and maximum average inside diameters given in the table may be used to check dimensions A and B. (This note has been approved as Authorized Engineering Information.)

Copyright National Electrical Manufacturers Association
Provided by IHS under license with NEMA
No reproduction or networking permitted without license from IHS

Not for Resale

Table 2-4
COUPLINGS

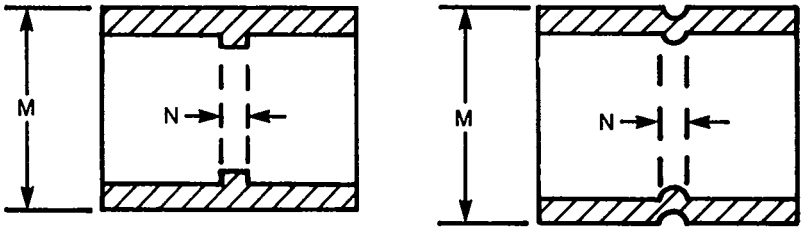

MOLDED FABRICATED

Nominal Size of Fitting in Inches	Inches			Millimeters		
	M, Maximum	SH, Maximum	N, Minimum	M, Maximum	SH, Maximum	N, Minimum
2	2 47/64	0.075	3/32	69.5	1.90	2.4
3	3 31/32	0.076	7/64	100.8	1.93	2.8
3½	4 ½	0.087	7/64	114.3	2.21	2.8
4	5 1/32	0.097	7/64	127.8	2.46	2.8
5	6 ¼	0.118	9/64	158.8	3.00	3.6
6	7 ½	0.140	9/64	190.5	3.56	3.6

Table 2-5
TERMINAL ADAPTERS

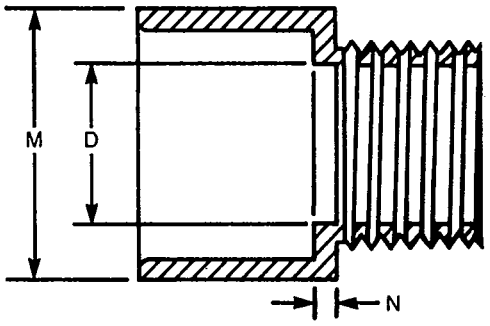

Nominal Size of Fitting in Inches	Inches			Millimeters		
	M, Maximum	D, Minimum	N, Minimum	M, Maximum	D, Minimum	N, Minimum
2	2 59/64	1.964	5/32	74.2	49.89	4.0
3	4 1/16	2.915	15/64	103.2	74.04	6.0
3½	4 19/32	3.371	¼	116.7	85.62	6.4
4	5 ⅛	3.825	¼	130.2	97.16	6.4
5	6 9/32	4.795	19/64	159.6	121.79	7.5
6	7 ½	5.762	17/64	190.5	146.35	6.7

Copyright National Electrical Manufacturers Association
Provided by IHS under license with NEMA
No reproduction or networking permitted without license from IHS

Not for Resale

Table 2-6
FEMALE ADAPTERS

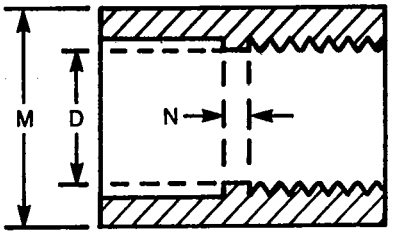

Nominal Size of Fitting in Inches	Inches			Millimeters		
	M, Maximum	D, Minimum	N, Minimum	M, Maximum	D, Minimum	N, Minimum
2	2 27/32	1.964	5/64	72.2	49.89	2.0
3	1 3/64	2.915	11/64	26.6	74.04	4.4
3½	4 37/64	3.371	11/64	116.3	85.62	4.4
4	5 7/64	3.825	11/64	129.8	97.16	4.4
5	6 9/32	4.795	15/64	159.6	121.79	6.0
6	7 33/64	5.762	15/64	190.9	146.35	6.0

Table 2-7
SOCKET END BELL (MOLDED)

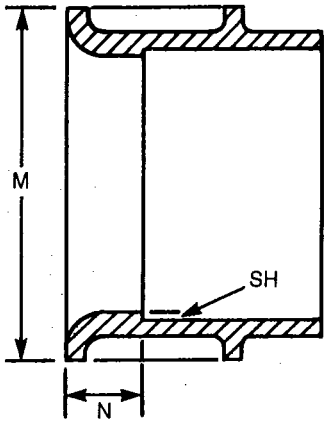

Nominal Size of Fitting in Inches	Inches			Millimeters		
	M, Maximum	SH, Maximum	N, Minimum	M, Maximum	SH, Maximum	N, Minimum
2	3 7/64	0.075	5/16	79.0	1.90	7.9
3	4 1/8	0.076	5/16	104.8	1.93	7.9
3½	4 5/8	0.087	5/16	117.5	2.21	7.9
4	5 11/32	0.097	7/16	135.7	2.46	11.1
5	6 13/32	0.118	7/16	162.7	3.00	11.1
6	7 13/32	0.140	7/16	188.1	3.56	11.1

Copyright National Electrical Manufacturers Association
Provided by IHS under license with NEMA
No reproduction or networking permitted without license from IHS

Not for Resale

Table 2-8
SOCKET END BELL (FABRICATED)

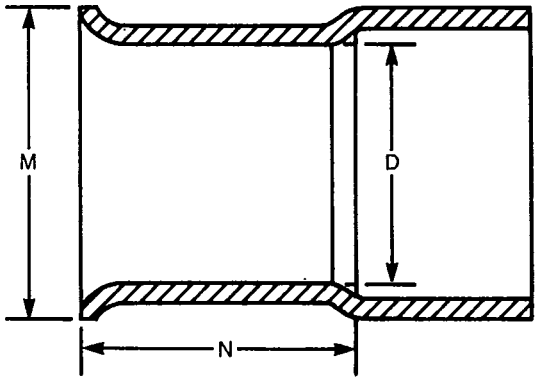

Nominal Size of Fitting in Inches	Inches			Millimeters		
	M, Maximum	N, Minimum	D, Minimum	M, Maximum	N, Minimum	D, Minimum
2	4 9/32	2 25/32	2.173	108.7	70.6	55.19
3	5 9/32	2 15/16	3.208	134.1	74.6	81.48
3½	4 3/4	3	3.668	120.6	76.2	93.17
4	5 ½	3	4.129	139.7	76.2	104.88
5	6 ½	4 ¼	5.195	165.1	108.0	131.95
6	7 ½	3 ¼	6.192	190.5	82.6	157.28

Table 2-9
DOMED CAP

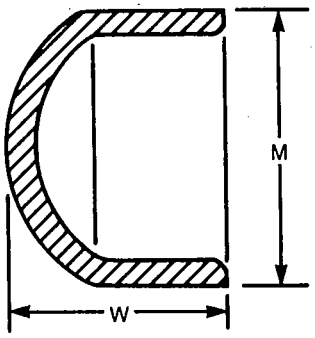

Nominal Size of Fitting in Inches	Inches		Millimeters	
	W, Maximum	M, Maximum	W, Maximum	M, Maximum
2	2 3/32	2 13/16	53.2	71.4
3	3	4 3/32	76.2	104.0
3½	3 ⅛	4 5/8	79.4	117.5
4	3 31/64	5 13/64	88.4	137.3
5	4 27/64	6 ¼	112.3	158.8
6	5 7/32	7 25/64	132.6	187.7

Copyright National Electrical Manufacturers Association
Provided by IHS under license with NEMA
No reproduction or networking permitted without license from IHS

Not for Resale

Table 2-10
FLAT CAP

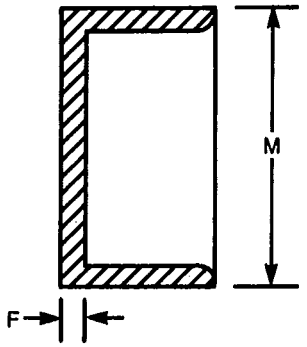

Nominal Size of Fitting in Inches	Inches		Millimeters	
	F, Minimum	M, Maximum	F, Minimum	M, Maximum
2	19/32	2 35/64	15.1	64.7
3	1/16	3 45/64	1.6	94.1
3½	5/64	4 7/32	2.0	107.2
4	3/32	4 3/4	2.4	120.6
5	3/32	5 53/64	2.4	148.0
6	1/8	6 61/64	3.2	176.6

Table 2-11
FITTING PLUG

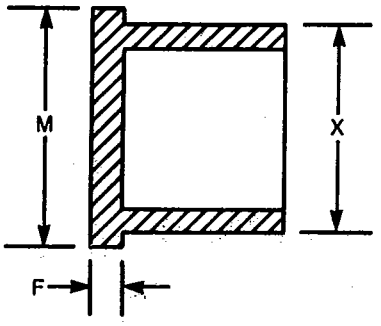

Nominal Size of Fitting in Inches	Inches				Millimeters			
	M	F	X		M	F	X	
	Maximum	Minimum	Average	Tolerance	Maximum	Minimum	Average	Tolerance
2	2 19/32	23/64	2.375	±0.006	65.9	9.1	60.32	±0.15
3	3 21/32	23/64	3.000	±0.008	92.9	9.1	88.90	±0.20
3½	4 9/32	23/64	3.500	±0.008	108.7	9.1	101.60	±0.20
4	4 25/32	23/64	4.500	±0.009	121.4	9.1	114.30	±0.23
5	5 21/32	13/32	5.563	±0.010	143.7	10.3	141.30	±0.25
6	...	...	...	...	...	...	...	...

Copyright National Electrical Manufacturers Association
Provided by IHS under license with NEMA
No reproduction or networking permitted without license from IHS

Not for Resale

Table 2-12
DUCT PLUG, TAPERED

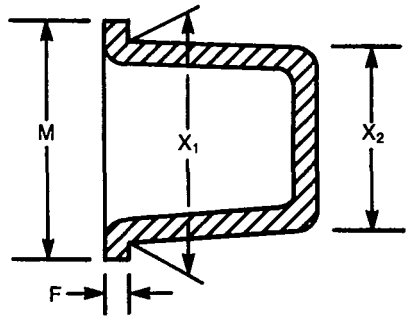

Nominal Size of Fitting in Inches	Inches				Millimeters			
	M, Maximum	X_1, Minimum	X_2, Maximum	F, Minimum	M, Maximum	X_1, Minimum	X_2, Maximum	F, Minimum
2	3 13/64	2 1/4	1 7/8	7/64	81.4	54.0	47.6	2.8
3	4	3 35/64	2 7/8	1/8	101.6	90.1	73.0	3.2
3½	4 9/16	4	3 3/8	1/64	115.9	101.6	85.7	0.4
4	5 3/16	4 34/64	3 27/32	7/64	131.8	115.1	97.6	2.8
5	6 9/32	5 3/4	4 7/8	7/64	159.5	146.0	123.8	2.8
6	6 7/8	6 45/64	5 7/8	5/64	174.6	170.3	149.2	2.0

Table 2-13
FIBER CONDUIT ADAPTER

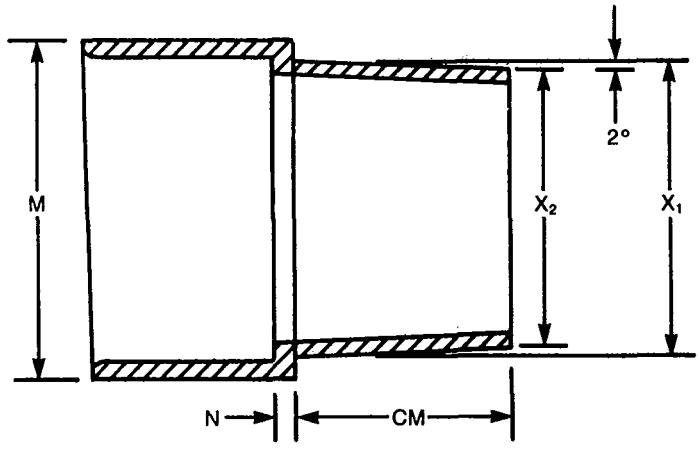

Nominal Size of Fitting in Inches	Inches					Millimeters				
	M Maximum	N Minimum	CM Nominal	X_1 Nominal	X_2 Nominal	M Maximum	N Minimum	CM Nominal	X_1 Nominal	X_2 Nominal
2	2 3/4	5/64	1 7/16	2.470	2 25/64	69.8	2.0	36.5	62.74	60.7
3	4	9/64	1 11/16	3.448	3 11/32	101.6	3.6	42.9	87.58	84.9
4	5 3/4	11/64	1 15/16	4.493	4 3/4	146.0	4.4	49.2	114.12	120.6

Copyright National Electrical Manufacturers Association
Provided by IHS under license with NEMA
No reproduction or networking permitted without license from IHS

Not for Resale

Table 2-14
CEMENT ASBESTOS CONDUIT ADAPTER

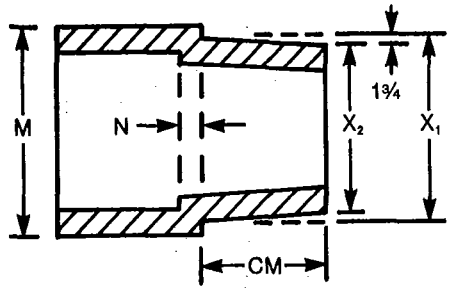

Nominal Size of Fitting in Inches	Inches					Millimeters				
	M Maximum	N Minimum	CM Nominal	X_1 Nominal	X_2 Nominal	M Maximum	N Minimum	CM Nominal	X_1 Nominal	X_2 Nominal
2	2 3/4	5/64	1 3/4	2.580	2 1/2	69.8	2.0	44.4	65.53	63.5
3	4	5/64	1 3/4	3.620	3 17/32	101.6	2.0	44.4	91.95	89.7
4	5 1/32	11/64	2	4.620	4 33/64	127.8	4.4	50.8	117.35	114.7

Table 2-15
EXPANSION COUPLING

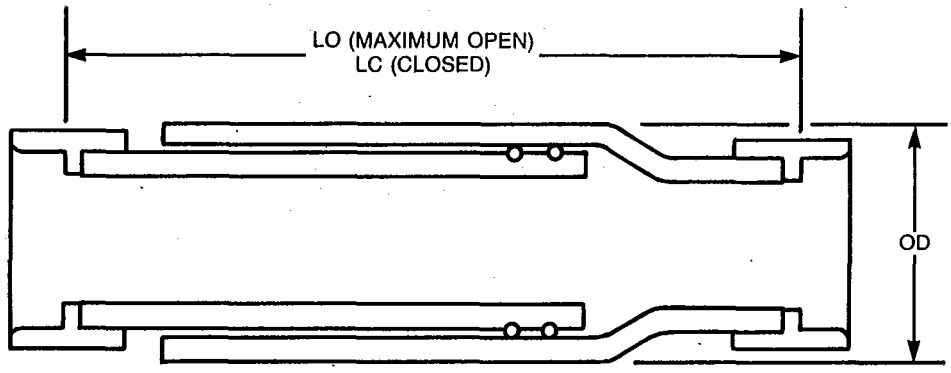

Nominal Size of Fitting in Inches	Inches				Millimeters			
	OD Maximum Outside Diameter	LO Maximum Lay Length Open	LC Minimum Lay Length Closed	Available Expansion-contraction Length	OD Maximum Outside Diameter	LO Maximum Lay Length Open	LC Minimum Lay Length Closed	Available Expansion-contraction Length
2	2 53/64	19 7/8	11 3/16	6 3/8	71.8	504.8	284.2	161.9
3	4 3/32	24 1/2	16 1/4	6 1/2	104.0	622.3	412.8	165.1
3 1/2	4 39/64	24 5/8	16 1/2	6 1/2	117.1	625.5	419.1	165.1
4	5 17/32	24 7/8	16 7/8	6 1/2	140.5	631.8	428.6	165.1
5	6 11/32	24 1/2	18 1/2	6	161.1	622.3	469.9	152.4
6	7 15/32	26 1/2	20 1/2	6	189.7	673.1	520.7	152.4

Copyright National Electrical Manufacturers Association
Provided by IHS under license with NEMA
No reproduction or networking permitted without license from IHS

Not for Resale

Table 2-16
BENDS AND SWEEPS

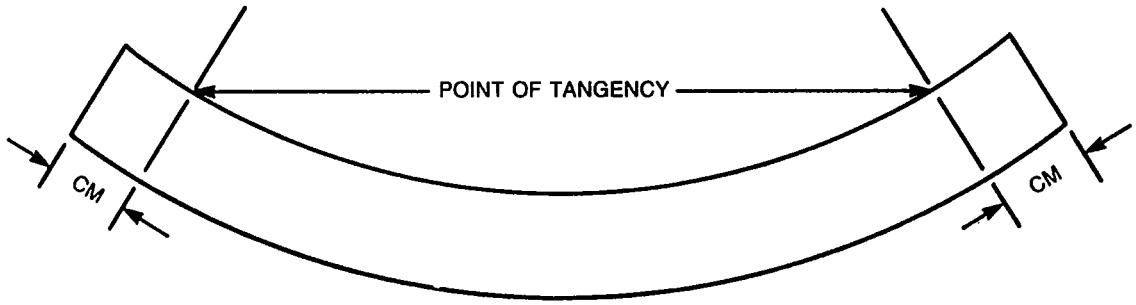

Nominal Size of Fitting	Radii, Degrees of Curvature, and Straight Tangent Lengths at End of Bends and Sweeps							
	U.S. Customary Units				Metric			
	45° and 90° Bends, Radius	22° and 30° Bends, Radius	22°, 30°, 45°, 90° Sweeps Radius	Minimum Straight Tangents Length at End Dimension CM	45° and 90° Bends, Radius	22° and 30° Bends, Radius	22°, 30°, 45°, 90° Sweeps Radius	Minimum Straight Tangents Length at End, Dimension CM
Inches	Inches	Inches	Feet	Inches	Meters	Meters	Meters	Millimeters
2	18, 24, 36, 48, 60	18, 24, 36, 48, 60	12½	2	0.46, 0.61, 0.91, 1.22, 1.52	0.46, 0.61, 0.91, 1.22, 1.52	3.8	50.8
3	18, 24, 30, 36, 48, 60	18, 24, 36, 48, 60	12½	3⅛	0.46, 0.61, 0.76, 0.91, 1.22, 1.52	0.46, 0.61, 0.91, 1.22, 1.52	3.8	79.4
3½	18, 24, 36, 48, 60	18, 24, 36, 48, 60	12½	3¼	0.46, 0.61, 0.91, 1.22, 1.52	0.46, 0.61, 0.91, 1.22, 1.52	3.8	82.6
4	18, 24, 36, 48, 60	18, 24, 36, 48, 60	12½	3⅜	0.46, 0.61, 0.91, 1.22, 1.52	0.46, 0.61, 0.91, 1.22, 1.52	3.8	85.7
5	36, 48, 60	48, 60	12½	3⅝	0.91, 1.22, 1.52	1.22, 1.52	3.8	92.1
6	48, 60	48, 60	12½	3¾	1.22, 1.52	1.22, 1.52	3.8	95.2

Alternate Constructions—

1. Bends and sweeps may have a belled socket on one end with socket dimensions conforming to those of Table 2-3, or
2. Bends and sweeps may have a molded coupling on one end with socket dimensions conforming to those of Table 2-2.

Copyright National Electrical Manufacturers Association
Provided by IHS under license with NEMA
No reproduction or networking permitted without license from IHS
Not for Resale

Table 2-17
5-DEGREE ANGLE COUPLINGS

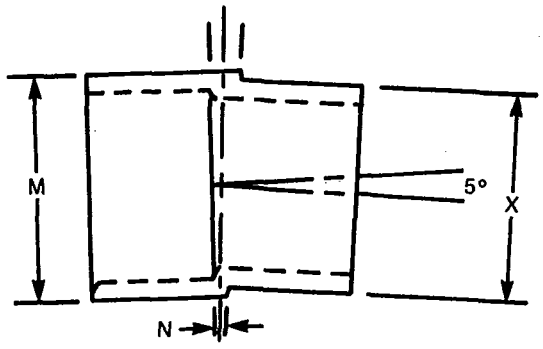

MOLDED SOCKET BY SPIGOT

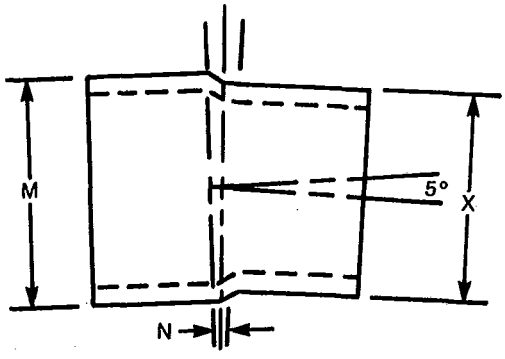

THERMOFORMED (FABRICATED)
SOCKET BY SPIGOT

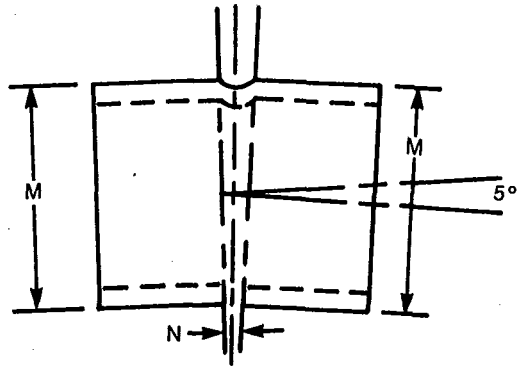

THERMOFORMED (FABRICATED)
SOCKET BY SOCKET

Nominal Size of Fitting in Inches	Inches				Millimeters			
	M	N	X		M	N	X	
	Maximum	Minimum	Average	Tolerance	Maximum	Minimum	Average	Tolerance
2	2 9/16	1 1/8	2.375	±0.006	65.1	28.6	60.32	±0.15
3	3 23/32	1	3.500	±0.008	94.5	25.4	88.90	±0.20
4	4 51/64	14/64	4.500	±0.009	121.8	6.0	114.30	±0.23
5	5 59/64	15/64	5.563	±0.010	150.4	10.0	141.30	±0.25
6	7 1/64	9/16	6.625	±0.011	178.2	14.3	168.21	±0.28

Copyright National Electrical Manufacturers Association
Provided by IHS under license with NEMA
No reproduction or networking permitted without license from IHS

Not for Resale

NEMA STANDARDIZATION

The purpose of NEMA Standards, their classification and status, are set forth in certain clauses of the NEMA *Standardization Policies and Procedures* manual and are referenced below.

Purpose of Standards

National Electrical Manufacturers Association standards are adopted in the public interest and are designed to eliminate misunderstandings between the manufacturer and the purchaser and to assist purchasers in selecting and obtaining the proper product for their particular needs. Existence of a National Electrical Manufacturers Association standard does not in any respect preclude any member or nonmember from manufacturing or selling products not conforming to the standard. *(Standardization Policies and Procedures, p. 1)*

Definition of a Standard

A standard of the National Electrical Manufacturers Association defines a product, process, or procedure with reference to one or more of the following: nomenclature, composition, construction, dimensions, tolerances, safety, operating characteristics, performance, rating, testing, and the service for which they are designed.

(Standardization Policies and Procedures, p. 2)

Dimensions

Where dimensions are given for interchangeability purposes, alternate dimensions satisfying the other provisions of the Standards Publication may be capable of otherwise equivalent performance.

(Standardization Policies and Procedures, p.8)

Categories of Standards

National Electrical Manufacturers Association Standards are of three classes:

1. NEMA Standard, which relates to a product, process, or procedure commercially standardized and subject to repetitive manufacture, which standard has been approved by at least 90 percent of the members of the Subdivision eligible to vote thereon;
2. Suggested Standard for Future Design, which may not have been regularly applied to a commercial product, but which suggests a sound engineering approach to future development, which standard has been approved by at least two-thirds of the members of the Subdivision eligible to vote thereon.
3. Adoptive Standard, which is adopted in whole or in part from the standards of another organization, either domestic, regional, or international.

(Standardization Policies and Procedures, pp. 7 & 16)

Authorized Engineering Information

Authorized Engineering Information consists of explanatory data and other engineering information of an informative character not falling within the classification of NEMA Standard or Suggested Standard for Future Design, which standard has been approved by at least two-thirds of the members of the Subdivision eligible to vote on the standard.

(Standardization Policies and Procedures, pp. 7 & 16)

Official Standards Proposal

An Official Standards Proposal is an official draft of a proposed standard which is formally recommended to an outside organization(s) for consideration, comment, and/or approval, and which has been approved by at least 90 percent of the members of the Subdivision eligible to vote thereon.

(Standardization Policies and Procedures, pp. 7 & 16)

Identification of Status

Standards in NEMA Standards Publications are identified in the foreword or following each standard as "NEMA Standard" or "Suggested Standard for Future Design." These indicate the status of the standard. These words are followed by a date which indicates when the standard was adopted in its present form by the Association.

The material identified as "Authorized Engineering Information" and "Official Standards Proposal" is designated similarly.

Copyright National Electrical Manufacturers Association
Provided by IHS under license with NEMA
No reproduction or networking permitted without license from IHS
Not for Resale

PLASTIC CONDUIT, DUCT AND ACCESSORIES SECTION OF THE NATIONAL ELECTRICAL MANUFACTURERS ASSOCIATION

MEMBER COMPANIES

Aeroquip Corp./Underground Products
Nashville, TN 37210

Arnco Corporation
Elyria, OH 44035

Can-Tex Industries
Mineral Wells, TX 76067

Carlon
Division of Lamson & Sessions
Cleveland, OH 44122

Certainteed Corporation
Valley Forge, PA 19482

Fiberglass Pipe & Conduit Company
Ocean, NJ 07712

Formex Manufacturing, Inc.
Atlanta, GA 30362

FRE Composites, Inc.
Lakewood, NJ 08701

Hubbell Incorporated
Kellems Division
Stonington, CT 06378

J-M Manufacturing Co., Inc.
Stockton, CA 95206

LCP, Inc.
Edison, NJ

Midwest Plastic
Fabricators, Inc.
Chagrin Falls, OH 44022

Pacific Western
Extruded Plastics
Eugene, OR 97401

Queen City Plastics, Inc.
Charlotte, NC 28241

R&G Sloane Manufacturing, Co., Inc.
Sun Valley, CA 91352

Sedco Pipe Products
Auburndale, FL 33823

Smith Fiberglass Products Company
Wichita, KS 67217

Thomas & Betts Corporation
Bridgewater, NJ 08807

Underground Devices, Inc.
Glenview, IL 60025

United Fiberglass of America, Inc.
Springfield, OH

Copyright National Electrical Manufacturers Association
Provided by IHS under license with NEMA
No reproduction or networking permitted without license from IHS
Not for Resale