TC 6 & 8

PVC PLASTIC UTILITIES DUCT FOR UNDERGROUND INSTALLATIONS

Copyright National Electrical Manufacturers Association
Provided by IHS under license with NEMA
No reproduction or networking permitted without license from IHS
Not for Resale

NEMA Standards Publication No. TC 6 & 8-1999

PVC Plastic Utilities Duct for Underground Installations

Published by:

National Electrical Manufacturers Association
1300 North 17th Street
Rosslyn, Virginia 22209

© Copyright 1999 by the National Electrical Manufacturers Association. All rights, including translation into other languages, reserved under the Universal Copyright Convention, the Berne Convention for the Protection of Literary and Artistic Works, and the International and Pan American Copyright Conventions.

Copyright National Electrical Manufacturers Association
Provided by IHS under license with NEMA
No reproduction or networking permitted without license from IHS
Not for Resale

CONTENTS

FOREWORD iii
Section 1 GENERAL 1
1.1 SCOPE 1
1.2 REFERNCED STANDARDS 1
Section 2 DEFINITIONS AND ABBREVIATIONS 3
Section 3 GENERAL REQUIREMENTS 5
3.1 MATERIALS 5
3.1.1 PVC Utilities Duct 5
3.1.2 Solvent Cements and Primers 5
3.1.3 Gaskets and Lubricants 5
3.2 COLOR 5
3.3 DIMENSIONS AND LENGTHS 5
3.3.1 Duct Dimensions 5
3.3.2 Duct Length 5
3.3.3 Chamfer Dimensions 5
3.3.4 Joint Dimensions 6
3.4 JOINTS 7
3.4.1 Joint Types 7
3.4.2 Fittings 7
3.4.3 Integral Belled Ends for Solvent-Cemented Joints 7
3.4.4 Integral Belled Ends for Gasketed Joints 7
3.5 INSPECTIONS 7
Section 4 PERFORMANCE REQUIREMENTS 15
4.1 QUALIFICATION TESTS 15
4.1.1 Definition 15
4.1.2 Leakage at Joints 15
4.2 QUALITY-CONTROL TESTS 15
4.2.1 Definition 15
4.2.2 Conditioning 15
4.2.3 Workmanship 15
4.2.4 Impact Resistance 15
4.2.5 Duct Stiffness 16
Section 5 TEST METHODS 17
5.1 CONDITIONING, TEST CONDITIONS, AND SAMPLING 17
5.1.1 Conditioning 17
5.1.2 Test Conditions 17
5.1.3 Sampling 17
5.2 DIMENSIONS 17
5.2.1 Outside Diameter (Average) 17
5.2.2 Maximum and Minimum Outside Diameter (Out-of-Roundness) 17
5.2.3 Wall Thickness 17
5.3 DUCT STIFFNESS 18
5.4 LEAKAGE OF JOINTS 18
5.4.1 Solvent-Cemented Belled Ends 18
5.4.2 Gasketed Belled Ends 18
5.5 IMPACT RESISTANCE 18

Copyright National Electrical Manufacturers Association
Provided by IHS under license with NEMA
No reproduction or networking permitted without license from IHS
Not for Resale

Section 6 MARKINGS 19
6.1 MARKINGS 19
Appendix A INSTALLATION PRACTICES 21
Appendix B DEFLECTION MANDRELS 23
B.1 Scope 23
B.2 Definitions 23
B.3 Base Inside Diameters and 5% Deflection Mandrels 24
B.4 Applications 25
B.4.1 Intended Application 25
B.4.2 Prohibited Usage 25

Copyright National Electrical Manufacturers Association
Provided by IHS under license with NEMA
No reproduction or networking permitted without license from IHS
Not for Resale

FOREWORD

This Standards Publication for PVC plastic utilities duct for underground installation is intended:

a) To list dimensions and other significant requirements.
b) To set forth some of the properties of these products and to assist in selecting and obtaining the proper product for a particular need.

User needs have been considered throughout the development of these standards.

Through its members, the Polymer Raceways Section of NEMA has worked (and continues to work) with such organizations as the American Society for Testing and Materials, the Plastic Pipe Institute, appropriate government agencies, and others in the periodic review and revisions of these standards for any changes necessary to keep them up to date with advancing technology. Proposed or recommended revisions should be submitted to:

Vice President, Engineering
National Electrical Manufacturers Association
1300 North 17th Street, Suite 1847
Rosslyn, VA 22209

Publication No. TC 6 & 8-1999 revises and supersedes the NEMA Standards Publication "PVC Plastic Utilities Duct for Underground Installation," Publication No. TC 6-1990 and the NEMA Standards Publication "Extra-Strength PVC Plastic Utilities Duct for Underground Installation," Publication No. TC 8-1990.

This Standards Publication was developed by the Polymer Raceways Section. Section approval of the standard does not necessarily imply that all section members voted for its approval or participated in its development. At the time it was approved, the Group/Section was composed of the following members:

CANTEX, Inc. – Mineral Wells, TX
Lamson & Sessions – Cleveland, OH
Pacific Western Extruded Plastics – Eugene, OR

Copyright National Electrical Manufacturers Association
Provided by IHS under license with NEMA
No reproduction or networking permitted without license from IHS
Not for Resale

Section 1
GENERAL

1.1 SCOPE

These standards cover the following types of PVC plastic utilities duct for installation underground for communications and electrical wire and cable:

Type EB-20	Designed for burial encased in concrete
Type EB-35	Designed for burial encased in concrete
Type DB-60	Designed for direct burial without encasement in concrete
Type DB-100	Designed for direct burial without encasement in concrete
Type DB-120	Designed for direct burial without encasement in concrete

Type DB products are also used for concrete encased applications.

Fittings designed for use with the duct covered by this specification are described in NEMA Standards Publication No. TC 9, "Fittings for PVC Plastic Utilities Duct for Underground Installation."

NOTE—The values stated in U.S. customary units are to be regarded as the standard.

1.2 REFERENCED STANDARDS

In this publication, reference is made to the ASTM standards listed below. Copies are available from:

American Society for Testing and Materials
100 Barr Harbor Drive
West Conshohocken, PA 19428-2959

D 618-96	*Standard Practice for Conditioning Plastics and Electrical Insulating Materials for Testing*
D 883-96	*Terminology Relating to Plastics*
D 1600-97	*Standard Terminology for Abbreviated Terms Relating to Plastics*
D 1784-96	*Standard Specification for Rigid Poly(Vinyl Chloride) (PVC) Compounds and Chlorinated Poly(Vinyl Chloride) (CPVC) Compounds*
D 2122-97	*Standard Test Method for Determining Dimensions of Thermoplastic Pipe and Fittings*
D 2412-96a	*Standard Test Method for Determination of External Loading Characteristics of Plastic Pipe by Parallel-Plate Loading*
D 2444-93	*Standard Test Method for Determination of the Impact Resistance of Thermoplastic Pipe and Fittings by Means of a Tup (Falling Weight)*
D 2564-96a	*Standard Specification for Solvent Cements for Poly(Vinyl Chloride) (PVC) Plastic Piping Systems*

Copyright National Electrical Manufacturers Association
Provided by IHS under license with NEMA
No reproduction or networking permitted without license from IHS
Not for Resale

D 2672-96a	*Standard Specification for Joints for IPS PVC Pipe Using Solvent Cement*
D 4396-97	*Standard Specification for Rigid Poly(Vinyl Chloride) (PVC) and Related Plastic Compounds for Non-Pressure Piping Products*
F 402-93	*Standard Practice for Safe Handling of Solvent Cements, Primers, and Cleaners Used for Joining Thermoplastic Pipe and Fittings*
F 412-94b	*Standard Terminology Relating to Plastic Piping Systems*
F 477-96a	*Standard Specification for Elastomeric Seals (Gaskets) for Joining Plastic Pipe*
F 656-96a	*Standard Specification for Primers for Use in Solvent Cement Joints of Poly(Vinyl Chloride) (PVC) Plastic Pipe and Fittings*
F1365-91	*Standard Test Method for Water Infiltration Resistance of Plastic Underground Conduit Joints Which Use Flexible Elastomeric Seals*

National Electrical Manufacturers Association
1300 North 17th Street, #1847
Rosslyn, VA 22209

TC 9-1992	*Fittings for PVC Plastic Utilities Duct for Underground Installation*

Copyright National Electrical Manufacturers Association
Provided by IHS under license with NEMA
No reproduction or networking permitted without license from IHS
Not for Resale

Section 2
DEFINITIONS AND ABBREVIATIONS

2.1 Definitions of terms used in this standard shall be in accordance with ASTM D 883 or ASTM F 412, or both. Abbreviations shall be in accordance with ASTM D 1600, unless otherwise specified. The abbreviations for encased-burial duct is "EB" and for direct-burial duct is "DB."

--`,,`-`-`,,`,,`,`,,`---

Copyright National Electrical Manufacturers Association
Provided by IHS under license with NEMA
No reproduction or networking permitted without license from IHS

Not for Resale

Section 3
GENERAL REQUIREMENTS

3.1 MATERIALS

3.1.1 PVC Utilities Duct

Utilities duct shall be made from Poly(Vinyl Chloride) (PVC) plastic compound having one of the following cell classifications:

a) 12254 as defined in ASTM D 1784.
b) 12164 (with a minimum tensile strength of 4,000 psi (28 mPa) and a minimum modulus of elasticity in tension of 500,000 psi (3,450 mPa)) as defined in ASTM D 1784.
c) 11321 as defined in ASTM D 4396.

Other PVC compounds which have a different cell classification because one or more properties are superior to those of the compounds specified above may also be used.

Clean reworked material conforming to the cell class requirements of this standard may be used, provided that the duct produced meets all of the requirements of this standard.

3.1.2 Solvent Cements and Primers

PVC solvent cements shall be in accordance with ASTM D 2564. PVC primers shall be in accordance with ASTM F 656. ASTM F 402 is referenced as recommended practice for safe handling of solvent cements.

3.1.3 Gaskets and Lubricants

Elastomeric seals (gaskets) shall be in accordance with ASTM F 477 for low-head applications. Gaskets and lubricants shall be made from materials that are compatible with the plastic material and with each other when used together.

3.2 COLOR

PVC duct is usually gray in color. Other colors are acceptable if agreed to by the parties involved.

3.3 DIMENSIONS AND LENGTHS

3.3.1 Duct Dimensions

Dimensions shall meet the requirements of Table 3-1 when determined in accordance with Section 5.2.

3.3.2 Duct Length

The overall length (including the integral bell or coupling) is commonly:

20 ft + 1 in - 0 in (6.10 m + 25mm - 0mm)

Other lengths are acceptable if agreed to by the parties involved.

3.3.3 Chamfer Dimensions

The inside diameter of the spigot ends shall be chamfered as shown in Figure1.

Copyright National Electrical Manufacturers Association
Provided by IHS under license with NEMA
No reproduction or networking permitted without license from IHS
Not for Resale

3.3.4 Joint Dimensions

Dimensions for integral belled ends shall conform to the requirements of sections 3.4.3 or 3.4.4.

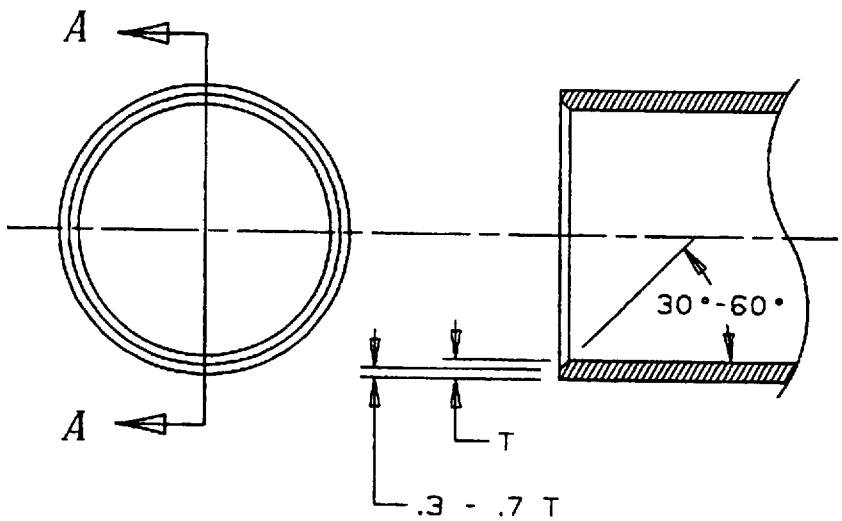

Figure 1

Copyright National Electrical Manufacturers Association
Provided by IHS under license with NEMA
No reproduction or networking permitted without license from IHS
Not for Resale

3.4 JOINTS

3.4.1 Joint Types

Two types of joining systems are used to join duct: solvent-cemented joints and gasketed joints. Joints shall be made with either fittings or integral belled ends.

3.4.2 Fittings

Solvented-cemented fittings used to join duct shall conform to the requirements of NEMA TC 9.

Gasketed fittings shall meet the joint-leakage requirements of section 4.1.2.

3.4.3 Integral Belled Ends for Solvent-Cemented Joints

The wall thickness of an integral bell shall be considered satisfactory if formed from duct meeting the requirements of this standard.

Belled ends shall be centered to provide a visible shoulder around the entire circumference of the duct.

Two systems of fit for integral bells are in common use: clearance fit and interference fit. Dimensions for belled ends shall be in accordance with Table 3-2 for clearance fit or Table 3-3 for interference fit.

The inside-diameter dimensions of an integral bell shall be considered satisfactory if it accepts the appropriate Go/No-Go gauges as specified in Table 3-4 for clearance fit or Table 3-5 for interference fit. The Go/No-Go gauges are typically machined from 1/4 inch (6 mm) thickness steel into a full circle gauge. The gauge is intended for on-line use by the extruder operator to continually check the dimension at the belled ends. The "Go" end is typically painted green while the "No-Go" end is painted red. Actual gauge dimensions are commonly marked on each end.

Bell socket depths shall be in accordance with Table 3-2 or Table 3-3. Bell length shall be measured with an instrument accurate to ± 1/16 inch (± 1 mm). A tape measure or steel rule is adequate.

Belled ends designed for solvent cementing shall meet the joint leakage requirement of section 4.1.2.

3.4.4 Integral Belled Ends for Gasketed Joints

The wall thickness of an integral bell shall be considered satisfactory if formed from duct meeting the requirements of this standard.

Belled ends shall be centered to provide a visible shoulder around the entire circumference of the duct.

Gasketed-joint dimensions shall be determined by the manufacturer.

Joints employing gaskets (elastomeric seals) are intended to be watertight. Belled ends with gaskets shall meet the joint leakage requirements of section 4.1.2.

3.5 INSPECTIONS

The manufacturer shall inspect the duct at the time of manufacture for compliance to dimensional and performance requirements and for freedom from defects as defined in section 4.2.

Copyright National Electrical Manufacturers Association
Provided by IHS under license with NEMA
No reproduction or networking permitted without license from IHS
Not for Resale

Table 3-1
DIMENSIONS OF UNDERGROUND UTILITIES DUCT

A. Inches

Trade Size	Metric Designators	Outside Diameter Average	Outside Diameter Tolerance	Out-of-Roundness[1]
1	27	1.315	±0.005	.060
1 ½	41	1.900	±0.006	.060
2	53	2.375	±0.006	.060
3	78	3.500	±0.008	.060
3 ½	91	4.000	±0.008	.100
4	103	4.500	±0.009	.100
5	129	5.563	±0.010	.100
6	155	6.625	±0.011	.100

[1] "Out-of-Roundness" is defined as maximum diameter minus minimum diameter.

Trade Size	Metric Designators	Minimum Wall Thickness[2] Minimum Modulus of Elasticity 400,000 psi EB-20	EB-35	DB-60	DB-100	DB-120
1	27	—	—	—	—	0.060
1 ½	41	—	—	0.060	—	0.065
2	53	—	0.060	0.065	—	0.083
3	78	0.067	0.082	0.100	0.121	0.127
3 ½	91	0.078	0.095	0.115	0.138	0.147
4	103	0.089	0.109	0.131	0.155	0.166
5	129	0.112	0.136	0.164	0.192	0.205
6	155	0.135	0.164	0.196	0.229	0.244

[2] Tolerance on wall thickness is +0.030, - 0.000 inch.

Copyright National Electrical Manufacturers Association
Provided by IHS under license with NEMA
No reproduction or networking permitted without license from IHS
Not for Resale

Table 3-1 (cont.)
DIMENSIONS OF UNDERGROUND UTILITIES DUCT

Trade Size	Metric Designators	Minimum Wall Thickness[2] Minimum Modulus of Elasticity 500,000 psi EB-20	EB-35	DB-60	DB-100	DB-120
1	27	—	—	—	—	0.060
1 ½	41	—	—	—	—	0.060
2	53	0.060	0.060	0.060	—	0.077
3	78	0.061	0.076	0.092	0.112	0.118
3 ½	91	0.072	0.088	0.107	0.128	0.136
4	103	0.082	0.100	0.121	0.145	0.154
5	129	0.103	0.126	0.152	0.179	0.191
6	155	0.125	0.152	0.182	0.213	0.227

[2]Tolerance on wall thickness is +.030 - 0 inch.

B. Millimeters

Metric Designators	Outside Diameter Average	Tolerance	Out-of-Roundness[1]
27	33.81	±0.13	1.52
41	48.26	±0.15	1.52
53	60.33	±0.15	1.52
78	88.90	±0.20	1.52
91	101.60	±0.20	2.54
103	114.30	±0.23	2.54
129	141.30	±0.25	2.54
155	168.28	±0.28	2.54

[1] "Out-of-Roundness" is defined as maximum diameter minus minimum diameter.

Metric Designators	Minimum Wall Thickness[2] Minimum Modulus of Elasticity 400,000 psi EB-20	EB-35	DB-60	DB-100	DB-120
27	—	—	—	—	1.52
41	—	—	1.52	—	1.65
53	—	1.52	1.65	—	2.11
78	1.70	2.08	2.54	3.07	3.23
91	1.98	2.41	2.92	3.51	3.73
103	2.26	2.77	3.33	3.94	4.22
129	2.84	3.45	4.17	4.88	5.21
155	3.43	4.17	4.98	5.82	6.20

[2]Tolerance on wall thickness is +0.76, - 0.00 mm.

Copyright National Electrical Manufacturers Association
Provided by IHS under license with NEMA
No reproduction or networking permitted without license from IHS
Not for Resale

Table 3-1 (cont.)
DIMENSIONS OF UNDERGROUND UTILITIES DUCT

Metric Designators	Minimum Wall Thickness[2] Minimum Modulus of Elasticity 500,000 psi				
	EB-20	EB-35	DB-60	DB-100	DB-120
27	—	—	—	—	1.52
41	—	—	—	—	1.52
53	1.52	1.52	1.52	—	1.96
78	1.55	1.93	2.34	2.84	3.00
91	1.83	2.24	2.72	3.25	3.45
103	2.08	2.54	3.07	3.68	3.91
129	2.62	3.20	3.86	4.55	4.85
155	3.18	3.86	4.62	5.41	5.77

[2]Tolerance on wall thickness is +0.76, - 0.00 mm.

Table 3-2
BELLED-END DIMENSIONS
(Clearance Fit)

A. Inches

Trade Size	Metric Designators	Average Socket Entrance ID	Average Socket Bottom ID	Tolerance on ID	Out-of-Roundness[1]	Minimum Socket Depth
1	27	1.331	1.320	±0.005	0.060	1.000
1 ½	41	1.921	1.906	±0.006	0.060	1.375
2	53	2.400	2.381	±0.006	0.060	1.750
3	78	3.538	3.508	±0.008	0.060	2.875
3 ½	91	4.041	4.008	±0.008	0.100	3.125
4	103	4.544	4.509	±0.009	0.100	3.375
5	129	5.614	5.573	±0.010	0.100	4.000
6	155	6.687	6.636	±0.011	0.100	5.000

[1] "Out-of-Roundness" is defined as maximum diameter minus minimum diameter.

B. Millimeters

Metric Designators	Average Socket Entrance ID	Average Socket Bottom ID	Tolerance on ID	Out-of-Roundness[1]	Minimum Socket Depth
27	33.81	33.53	±0.13	1.52	25.40
41	48.79	48.41	±0.15	1.52	34.93
53	60.96	60.48	±0.15	1.52	44.45
78	89.87	89.10	±0.20	1.52	73.03
91	102.64	101.80	±0.20	2.54	79.38
103	115.42	114.53	±0.23	2.54	85.73
129	142.60	141.55	±0.25	2.54	101.60
155	169.85	168.55	±0.28	2.54	127.00

[1] "Out-of-Roundness" is defined as maximum diameter minus minimum diameter.

Copyright National Electrical Manufacturers Association
Provided by IHS under license with NEMA
No reproduction or networking permitted without license from IHS
Not for Resale

Table 3-3
BELLED-END DIMENSIONS
(Interference Fit)

A. Inches

Trade Size	Metric Designators	Average Socket Entrance ID	Average Socket Bottom ID	Tolerance on ID	Out-of-Roundness[1]	Minimum Socket Depth
1	27	1.325	1.310	±0.005	0.020	0.875
1 ½	41	1.912	1.894	±0.006	0.024	1.094
2	53	2.387	2.369	±0.006	0.024	1.156
3	78	3.516	3.492	±0.008	0.030	1.875
3 ½	91	4.016	3.992	±0.008	0.030	2.000
4	103	4.518	4.491	±0.009	0.030	2.000
5	129	5.583	5.553	±0.010	0.060	3.000
6	155	6.647	6.614	±0.011	0.060	3.000

[1] "Out-of-Roundness" is defined as maximum diameter minus minimum diameter.

B. Millimeters

Metric Designators	Average Socket Entrance ID	Average Socket Bottom ID	Tolerance on ID	Out-of-Roundness[1]	Minimum Socket Depth
27	33.66	33.27	±0.13	0.51	22.23
41	48.56	48.11	±0.15	0.61	27.79
53	60.63	60.17	±0.15	0.61	29.36
78	89.31	88.70	±0.20	0.76	47.63
91	102.01	101.40	±0.20	0.76	50.80
103	114.76	114.07	±0.23	0.76	50.80
129	141.81	141.05	±0.25	1.52	76.20
155	168.83	168.00	±0.28	1.52	76.20

[1] "Out-of-Roundness" is defined as maximum diameter minus minimum diameter.

Copyright National Electrical Manufacturers Association
Provided by IHS under license with NEMA
No reproduction or networking permitted without license from IHS
Not for Resale

Table 3-4
GO/NO-GO GAUGES
(Clearance Fit)

A. Inches

Trade Size	Metric Designators	Socket Entrance		Socket Bottom	
		Go Gauge OD	No-Go Gauge OD	Go Gauge OD	No-Go Gauge OD
1	27	1.326	1.337	1.315	1.326
1 ½	41	1.915	1.928	1.900	1.913
2	53	2.394	2.407	2.375	2.388
3	78	3.530	3.547	3.500	3.517
3 ½	91	4.033	4.050	4.000	4.017
4	103	4.535	4.554	4.500	4.519
5	129	5.604	5.625	5.563	5.584
6	155	6.676	6.699	6.625	6.648
Tolerances		+0.0/-0.001	+0.001/-0.0	+0.0/-0.001	+0.001/-0.0

B. Millimeters

Metric Designators	Socket Entrance		Socket Bottom	
	Go Gauge OD	No-Go Gauge OD	Go Gauge OD	No-Go Gauge OD
27	33.68	33.96	33.40	33.68
41	48.64	48.97	48.26	48.59
53	60.81	61.14	60.33	60.66
78	89.66	90.09	88.90	89.33
91	102.44	102.87	101.60	102.03
103	115.19	115.67	114.30	114.78
129	142.34	142.88	141.30	141.83
155	169.57	170.15	168.28	168.86
Tolerances	+0.0/-0.03	+0.03/-0.0	+0.0/-0.03	+0.03/-0.0

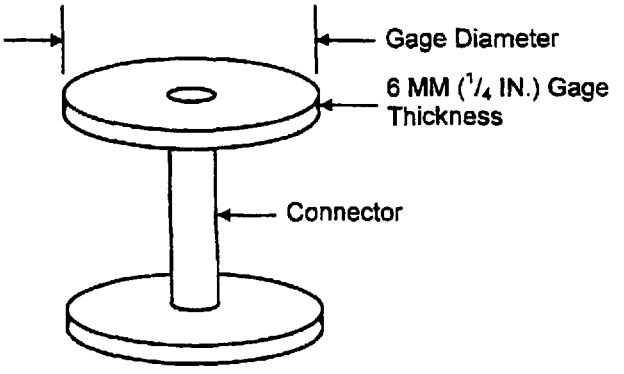

Copyright National Electrical Manufacturers Association
Provided by IHS under license with NEMA
No reproduction or networking permitted without license from IHS
Not for Resale

Table 3-5
GO/NO-GO GAUGES
(Interference Fit)

A. Inches

Trade Size	Metric Designators	Socket Entrance		Socket Bottom	
		Go Gauge OD	No-Go Gauge OD	Go Gauge OD	No-Go Gauge OD
1	27	1.320	1.331	1.305	1.316
1 ½	41	1.906	1.919	1.888	1.901
2	53	2.381	2.394	2.363	2.376
3	78	3.508	3.525	3.484	3.501
3 ½	91	4.008	4.025	3.984	4.001
4	103	4.509	4.528	4.482	4.501
5	129	5.573	5.594	5.543	5.564
6	155	6.636	6.659	6.603	6.626
Tolerances		+0.0/-0.001	+0.001/-0.0	+0.0/-0.001	+0.001/-0.0

B. Millimeters

Metric Designators	Socket Entrance		Socket Bottom	
	Go Gauge OD	No-Go Gauge OD	Go Gauge OD	No-Go Gauge OD
27	33.53	33.81	33.15	33.43
41	48.41	48.74	47.96	48.29
53	60.48	60.81	60.02	60.35
78	89.10	89.54	88.49	88.93
91	101.80	102.24	101.19	101.63
103	114.53	115.01	113.84	114.33
129	141.55	142.09	140.79	141.33
155	168.55	169.14	167.72	168.30
Tolerances	+0.0/-0.02	+0.02/-0.0	+0.0/-0.02	+0.02/-0.0

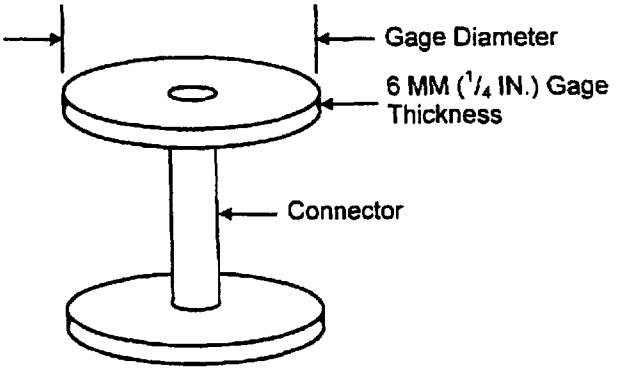

Copyright National Electrical Manufacturers Association
Provided by IHS under license with NEMA
No reproduction or networking permitted without license from IHS
Not for Resale

Section 4
PERFORMANCE REQUIREMENTS

4.1 QUALIFICATION TESTS

4.1.1 Definition

A qualification test is a non-repetitive evaluation conducted on an existing, altered, or new product to determine acceptability.

4.1.2 Leakage at Joints

4.1.2.1 Solvent-cemented joints between ducts and their respective fittings and/or belled ends shall not leak when tested in accordance with the following:

Solvent cement the joint using a method recommended by the manufacturer. After assembly, the joint shall be allowed to stand for 24 hours. The joint shall then be subjected to an internal or external pressure of 25 psi (172 kPa), using water as the medium, for one hour.

This is a qualification requirement and not a quality-control test.

4.1.2.2 Gasketed-duct joints shall not leak when tested in accordance with ASTM F 1365.

This is a qualification requirement and not a quality-control test.

4.2 QUALITY-CONTROL TESTS

4.2.1 Definition

A quality-control test is an in-plant test that is conducted on a given test frequency to determine whether a product is in accordance with the specification requirements.

4.2.2 Conditioning

At the time of production, measurements and performance tests are made at the ambient temperature within the factory. In case of disagreement, specimens shall be conditioned in accordance with section 5.1.1.

4.2.3 Workmanship

Duct shall be homogeneous throughout and free from visible cracks, holes, foreign inclusions, or other defects.

4.2.4 Impact Resistance

The minimum drop-weight impact-test values shall be as listed in Table 4-1 when tested in accordance with section 5.5.

Impact-resistance tests are quality-control tests intended to verify that the duct has been properly extruded. The tests are not intended to represent field conditions.

When applied to the duct within 48 hours of manufacture, the test criteria have been found by experience to be adequate for handling, transport, and installation. The actual impact-resistance strength is generally higher, but varies because it is dependent on specific material formulation, specific extrusion machine, and specific extrusion procedures. Changes in formulation to obtain maximum impact resistance may result in lesser values in other parameters such as deflection resistance.

Copyright National Electrical Manufacturers Association
Provided by IHS under license with NEMA
No reproduction or networking permitted without license from IHS
Not for Resale

Exposure of PVC duct to ultraviolet (UV) radiation will result in a measurable decrease in impact resistance. Therefore, impact-resistance values are applicable only at time of manufacture and are not applicable for yard-aged duct. However, initial impact values set by the standard are higher than necessary for normal handling.

Table 4-1
MINIMUM IMPACT-RESISTANCE VALUES FOR DUCT

Trade	Metric	Minimum Impact Resistance at 32°F (0°C)									
		EB-20		EB-35		DB-60		DB-100		DB-120	
Size	Designation	ft-lbf	(J)	ft-lbf	(J)	ft-lbf	(J)	ft-lbf	(J)	ft-lbf	(J)
1	27	---	---	---	---	---	---	---	---	10	(14)
1 ½	41	---	---	---	---	10	(14)	---	---	15	(20)
2	53	20	(27)	20	(27)	20	(27)	25	(34)	25	(34)
3	78	20	(27)	30	(41)	40	(54)	45	(61)	50	(68)
3 ½	91	20	(27)	35	(47)	50	(68)	60	(81)	65	(88)
4	103	25	(34)	40	(54)	60	(81)	70	(95)	80	(108)
5	129	30	(41)	55	(75)	85	(115)	100	(136)	110	(149)
6	155	40	(54)	75	(102)	120	(163)	135	(183)	150	(203)

4.2.5 Duct Stiffness

The minimum duct-stiffness values for Types EB and DB underground duct shall be shown in Table 4-2 when tested accordance with section 5.3. Three specimens shall be tested, and all shall meet the requirements.

Table 4-2
MINIMUM DUCT STIFFNESS FOR TYPES EB AND DB UNDERGROUND DUCT

Trade	EB-20 F/ΔY		EB-35 F/ΔY		DB-60 F/ΔY		DB-100 F/ΔY		DB-120 F/ΔY	
Size	psi	(kPa)	psi	(kPa)	psi	(kPa)	psi	(kPa)	psi	(kPa)
All	20	(138)	35	(241)	60	(414)	100	(689)	120	(827)

Copyright National Electrical Manufacturers Association
Provided by IHS under license with NEMA
No reproduction or networking permitted without license from IHS
Not for Resale

Section 5
TEST METHODS

5.1 CONDITIONING, TEST CONDITIONS, AND SAMPLING

5.1.1 Conditioning

5.1.1.1 Referee Test

When conditioning is required for referee tests, test specimens shall be conditioned in accordance with Procedure A in ASTM D 618 at 73.4° ± 3.6°F (23° ± 2°C) and 50 ± 5% relative humidity for not less than 40 hours prior to test. The 32°F (0°C) drop-weight specimen and the surrounding conditioning medium shall be in thermal equilibrium with one another at a temperature of 32° to 35°F (0° to 1.6°C).

5.1.1.2 Quality-Control Test

For quality-control testing, test specimens shall be conditioned for a minimum of three hours in air or one hour in liquid at 73.4° ± 3.6°F (23° ± 2°C).

The 32°F (0°C) drop-weight impact specimens shall be conditioned at 32° to 35°F (0° to 1.6°C) for at least one-half hour in liquid or other suitable means to obtain thermal equilibrium.

5.1.2 Test Conditions

Tests shall be conducted at 73.4° ± 3.6°F (23° ± 2°C), without regard to relative humidity.

5.1.3 Sampling

Samples shall be selected at random.

5.2 DIMENSIONS

5.2.1 Outside Diameter (Average)

The average outside diameter at any cross section on the length of duct shall be as measured by the use of vernier circumferential tape in accordance with Section 8 of ASTM D 2122.

5.2.2 Maximum and Minimum Outside Diameter (Out-of-Roundness)

The outside diameter of duct shall be measured in accordance with Section 8 of ASTM D 2122. Out-of-roundness tolerances shall apply only at the point of manufacture. Out-of-roundness is not a requirement applicable for duct that has been packaged and placed in yard storage.

5.2.3 Wall Thickness

The maximum and minimum wall thickness shall be measured with a micrometer at one end of the duct to the nearest 0.001 inch (0.02 mm) in accordance with Section 6 of ASTM D 2122.

Copyright National Electrical Manufacturers Association
Provided by IHS under license with NEMA
No reproduction or networking permitted without license from IHS
Not for Resale

5.3 DUCT STIFFNESS

The minimum duct-stiffness values for types EB and DB underground duct shall be as shown in Table 4-2 when tested as follows:

The duct stiffness (F/ΔY) shall be determined at five percent inside diameter deflection in accordance with ASTM D 2412. Three specimens, each 6 ± 1/8 in (152 ± 3 mm) long, shall be cut from each sample. Each specimen shall be placed so that the minimum wall thickness is uppermost (adjacent to the top bearing plate). The vertical inside diameter shall be measured before compressing the specimen.

The specimens shall be compressed at the rate of 1/2 in (13 mm) per minute and the load recorded at the point where the inside diameter is equal to 95 percent of the original inside diameter of the specimen.

The duct stiffness at five percent vertical deflection shall be determined as follows:

$$\text{Duct Stiffness} = F/\Delta Y, \text{ Pounds/Inch/Inch (Kilopascals)}$$

Where:

F = Load in pounds per inch of length recorded at five percent vertical deflection in inches.
ΔY = Vertical deflection of inside diameter in inches.

5.4 LEAKAGE OF JOINTS

5.4.1 Solvent-Cemented Belled Ends

Solvent-cemented joints between ducts and their respective fittings and/or belled ends shall not leak when tested in accordance with the following:

Solvent cement the joint using a method recommended by the manufacturer. After assembly, the joints shall be allowed to stand for 24 hours at room temperature. The specimen shall then be subjected to an internal or external pressure of 25 psi (172 kPa), using water as the medium, for one hour.

5.4.2 Gasketed Belled Ends

Gasketed-duct joints shall not leak when tested in accordance with ASTM F 1365. This is a qualification requirement and not a quality-control test.

5.5 IMPACT RESISTANCE

The minimum impact-resistance values for duct shall be as shown in Table 4-1 when tested as follows:

After conditioning in accordance with Section 5.1, five specimens, each 6 ± 1/8 in (152 ± 3 mm) long, shall be tested in accordance with Section 10 of ASTM D 2444, using a 20-lb (9 kg) Tup B and flat plate holder B. All specimens shall pass. If one fails, another five specimens shall be tested. If nine out of ten specimens pass the test, the duct shall be considered to have met the requirements of this standard. No more than 15 seconds shall elapse from the time of removal of the specimen from conditioning medium until completion of that test.

Copyright National Electrical Manufacturers Association
Provided by IHS under license with NEMA
No reproduction or networking permitted without license from IHS
Not for Resale

Section 6
MARKINGS

6.1 MARKINGS

All required markings shall be legible and so applied as to remain legible under normal handling and installation practices.

Duct shall be marked at intervals of 5 ft (1.5 m) or less with the following:

a) Manufacturer's name or trademark
b) Nominal size
c) PVC cell classification: PVC12254-B, for example
d) NEMA TC6/TC8
e) Type: EB-20, for example
f) Any additional marking deemed necessary by the manufacturer

Copyright National Electrical Manufacturers Association
Provided by IHS under license with NEMA
No reproduction or networking permitted without license from IHS

Not for Resale

Appendix A
INSTALLATION PRACTICES

It is recommended that the products described by these standards be installed in accordance with the applicable parts of NEMA Bulletin No. TC-B2, "Users Manual for the Installation of Underground Plastic Duct," or in accordance with manufacturer's recommendations.

Previous page is blank

Copyright National Electrical Manufacturers Association
Provided by IHS under license with NEMA
No reproduction or networking permitted without license from IHS

Not for Resale

Appendix B
DEFLECTION MANDRELS

B.1 SCOPE

This appendix provides a rational method for sizing the mandrels used for deflection testing of installed electrical duct. This appendix is similar to ASTM D 3034 Appendix X1 for PVC sewer pipe.

B.2 DEFINITIONS

Terms specific to this appendix are as follows:

a) Average inside diameter = Average outside diameter - 2 x Average wall thickness

b) Average wall thickness = Minimum wall thickness x 1.06

c) Excess wall thickness = 0.06 x Minimum wall thickness

d) Ovality = Difference between maximum and minimum outside diameters of duct that has been packaged, stored, and shipped. (Ovality is similar to the "out-of-roundness" that is applicable before packaging has occurred.)

e) Ovality tolerance = ovality values that were extrapolated from ASTM D 3034 Appendix X1. The ASTM values were statistically derived from field-measurement data.

f) Tolerance package = the square root of the sum of squared duct tolerances

$$= (A^2 + 2B^2 + C^2)^{0.5}$$

Where:

A = Outside diameter tolerance (Table 3-1)
B = Excess wall thickness tolerance = .06 x minimum wall thickness (Table 3-1)
C = Ovality tolerance

Trade Size	Metric Designators	Ovality Tolerance (in)	(mm)
1	27	0.090	2.29
1 ½	41	0.096	2.44
2	53	0.102	2.59
3	78	0.114	2.90
3 ½	91	0.120	3.05
4	103	0.126	3.20
5	129	0.138	3.51
6	155	0.150	3.81

Previous page is blank

Copyright National Electrical Manufacturers Association
Provided by IHS under license with NEMA
No reproduction or networking permitted without license from IHS
Not for Resale

Base inside diameter = minimum inside diameter

= average inside diameter - tolerance package

5% deflection mandrel = a go/no-go gauge with an outside diameter sized at 95% of the duct's base inside diameter.

B.3 BASE INSIDE DIAMETERS AND 5% DEFLECTION MANDRELS

Table B-1 provides inside-diameter values ("base inside diameter") to be used as the basis for calculating allowable deflections. Using five percent as the deflection limit, outside-diameter values are provided for go/no-go deflection mandrels ("5% deflection mandrels").

Table B-1
BASE INSIDE DIAMETERS AND 5% DEFLECTION-MANDREL DIMENSIONS

		EB-20					
Trade Size	Metric Designator	Average Inside Diameter		Base Inside Diameter		5% Deflection Mandrel	
		(in)	(mm)	(in)	(mm)	(in)	(mm)
3	78	3.358	85.3	3.24	82.4	3.08	78.3
3 ½	91	3.835	97.4	3.71	94.3	3.53	89.6
4	103	4.311	109.5	4.18	106.3	3.98	101.0
5	129	5.326	135.3	5.19	131.8	4.93	125.2
6	155	6.339	161.0	6.19	157.2	5.88	149.3

		EB-35					
Trade Size	Metric Designator	Average Inside Diameter		Base Inside Diameter		5% Deflection Mandrel	
		(in)	(mm)	(in)	(mm)	(in)	(mm)
2	53	2.248	57.1	2.15	54.5	2.04	51.8
3	78	3.326	84.5	3.21	81.6	3.05	77.5
3 ½	91	3.799	96.5	3.68	93.4	3.49	88.8
4	103	4.269	108.4	4.14	105.2	3.94	100.0
5	129	5.275	134.0	5.14	130.5	4.88	123.9
6	155	6.277	159.4	6.13	155.6	5.82	147.8

Copyright National Electrical Manufacturers Association
Provided by IHS under license with NEMA
No reproduction or networking permitted without license from IHS
Not for Resale

Table B-1 Cont.
BASE INSIDE DIAMETERS AND 5% DEFLECTION-MANDREL DIMENSIONS

DB-60

Trade Size	Metric Designator	Average Inside Diameter		Base Inside Diameter		5% Deflection Mandrel	
		(in)	(mm)	(in)	(mm)	(in)	(mm)
1 ½	41	1.773	45.0	1.68	42.6	1.59	40.5
2	53	2.237	56.8	2.13	54.2	2.03	51.5
3	78	3.288	83.5	3.17	80.6	3.01	76.6
3 ½	91	3.756	95.4	3.64	92.3	3.45	87.7
4	103	4.222	107.2	4.10	104.0	3.89	98.8
5	129	5.215	132.5	5.08	128.9	4.82	122.5
6	155	6.209	157.7	6.06	153.9	5.76	146.2

DB-100

Trade Size	Metric Designator	Average Inside Diameter		Base Inside Diameter		5% Deflection Mandrel	
		(in)	(mm)	(in)	(mm)	(in)	(mm)
3	78	3.243	82.4	3.13	79.5	2.97	75.5
3 ½	91	3.707	94.2	3.59	91.1	3.41	86.5
4	103	4.171	106.0	4.04	102.7	3.84	97.6
5	129	5.156	131.0	5.02	127.4	4.77	121.1
6	155	6.140	155.9	5.99	152.1	5.69	144.5

DB-120

Trade Size	Metric Designator	Average Inside Diameter		Base Inside Diameter		5% Deflection Mandrel	
		(in)	(mm)	(in)	(mm)	(in)	(mm)
1	27	1.188	30.2	1.10	27.9	1.04	26.5
1 ½	41	1.762	44.8	1.67	42.3	1.58	40.2
2	53	2.199	55.9	2.10	53.3	1.99	50.6
3	78	3.231	82.1	3.12	79.1	2.96	75.2
3 ½	91	3.688	93.7	3.57	90.6	3.39	86.1
4	103	4.148	105.4	4.02	102.1	3.82	97.0
5	129	5.128	130.3	4.99	126.7	4.74	120.4
6	155	6.108	155.1	5.96	151.3	5.66	143.7

B.4 APPLICATIONS

B.4.1 Intended Application

The base inside diameters listed in Table B-1 are intended only for the sizing of deflection mandrels.

B.4.2 Prohibited Usage

The base inside diameters listed in Table B-1 shall not be used for product quality-control requirements nor for wire-fill area calculations.

Copyright National Electrical Manufacturers Association
Provided by IHS under license with NEMA
No reproduction or networking permitted without license from IHS
Not for Resale