NATIONAL ELECTRICAL MANUFACTURERS ASSOCIATION
2101 L STREET N.W. WASHINGTON, D.C. 20037



TO ALL REPRESENTATIVES OF MEMBER COMPANIES
IN THE PLASTIC CONDUIT, DUCT AND
ACCESSORIES SECTION

Subject: Revision No. 1 to NEMA Standards Publication No. TC 3-1982
*PVC Fitting for Use With Rigid PVC Conduit and Tubing*

Dear Representatives:

At its meeting of May 16, 1984, the Codes and Standards Committee approved the subject revision. The first set of revised printed pages, including revised front and back covers, is enclosed for inclusion in your copy of Publication No. TC 3-1982. These pages will bring your book completely up to date.

Please insert these pages carefully since extra copies are not available.

Sincerely yours,

Carol Cross

Carol S. Cross
Standards Publication Editor

CSC:mbh

Enc: Rev. No. 1 to TC 3-1982

cc: All Technical Committees
All Known Holders of TC 3-1982
All Voting Representatives

Copyright National Electrical Manufacturers Association
Provided by IHS under license with NEMA
No reproduction or networking permitted without license from IHS
Not for Resale

TC 3-82 6470247 0004107 6 A-07-07

STANDARDS PUBLICATION/NO. TC 3-1982
Including Rev. 1—September, 1984

nema

# PVC Fittings for Use With Rigid PVC Conduit and Tubing

NEMA

NATIONAL ELECTRICAL MANUFACTURERS ASSOCIATION ● 2101 L STREET, N.W., WASHINGTON, D.C. 20037

Copyright National Electrical Manufacturers Association
Provided by IHS under license with NEMA
No reproduction or networking permitted without license from IHS
Not for Resale

# TABLE OF CONTENTS


| | | Page |
|---|---|---|
| | FOREWORD | i |
| | PURPOSE | ii |
| | SCOPE | ii |
| **Section 1** | DEFINITIONS | |
| | Conduit Fitting | 1 |
| | Conduit Coupling | 1 |
| | Junction Box Adapter | 1 |
| | Female Adapter | 1 |
| | Male Terminal Adapter | 1 |
| | Reducer | 1 |
| | Cap | 1 |
| | Bell End | 1 |
| **Section 2** | GENERAL | |
| | Applications | 2 |
| | Materials | 2 |
| | Nominal Sizes | 2 |
| | Dimensions | 2 |
| | Depth of Penetration | 2 |
| | Threads | 2 |
| **Section 3** | PERFORMANCE REQUIREMENTS | |
| | Material | 8 |
| | Bending | 8 |
| | Axial Pull Test on Joints | 8 |
| | Workmanship | 8 |
| | Molding Process | 8 |
| | Low Temperature Handling | 8 |
| **Section 4** | TEST METHODS | |
| | Conditioning, Test Conditions, and Sampling | 9 |
| | Dimensions | 9 |
| | Threads | 9 |
| | Bending | 10 |
| | Axial Pull Test on Joints | 10 |
| | Molding Process Test | 10 |
| | Low Temperature Handling Test | 11 |
| | Retests | 11 |
| **Section 5** | MARKINGS | 12 |
| **Appendix A** | REFERENCED STANDARDS | A-1 |


© 1982 by National Electrical Manufacturers Association

Copyright National Electrical Manufacturers Association
Provided by IHS under license with NEMA
No reproduction or networking permitted without license from IHS
Not for Resale

## Foreword

User needs have been considered throughout the development and revision of these standards.

The Plastic Conduit, Duct and Accessories Section of NEMA, through its members, has worked (and continues to work) closely with such organizations as the American Society for Testing and Materials, the Plastic Pipe Institute, the Western Underground Committee, appropriate government agencies, Underwriters Laboratories Inc., and others in the periodic review and revision of these standards for any changes necessary to keep them up to date with advancing technology. Proposed or recommended revisions should be submitted to:

Manager, Engineering Department
National Electrical Manufacturers Association
2101 L Street, N.W.
Washington, DC 20037



Copyright National Electrical Manufacturers Association
Provided by IHS under license with NEMA
No reproduction or networking permitted without license from IHS
Not for Resale

## Purpose

The purpose of these standards for PVC fittings intended for use with rigid PVC conduit and tubing above and below ground is to inform producers, distributors, engineers, code officials, and users about some of the properties and dimensions of these products and to assist in selecting and obtaining the proper product for a particular need.

## Scope

These standards cover PVC plastic fittings intended to be joined in the field by means of a solvent cement system to the following types of rigid conduit, tubing, and other fittings, based on the outside diameters given in NEMA Standards Publication No. TC 2:

EPT-PVC —Electrical plastic tubing and fittings for Type I applications.

EPC-40-PVC—Electrical plastic conduit and fittings for Type II and III applications.

EPC-80-PVC—Electrical plastic conduit and fittings for Type IV applications.

The designation "PVC" refers to polyvinyl chloride. The designations "40" and "80" refer to Schedules 40 and 80, respectively, of iron pipe dimensions. See 2.1 for Type I, II, III, and IV applications.

Included in this publication are requirements for materials, workmanship, dimensions, physical properties, couplings, female adapters, male terminal adapters, junction box adapters, reducers, caps, and bell end couplings. Methods of marking and inspection and practices for indicating compliance with these standards are also given. Junction boxes and access fittings are not included.

NOTE—The values stated in U.S. customary units are to be regarded as the standard. The values given in parenthesis are for information purposes only.



Copyright National Electrical Manufacturers Association
Provided by IHS under license with NEMA
No reproduction or networking permitted without license from IHS
Not for Resale

# PVC FITTINGS FOR USE WITH RIGID PVC CONDUIT AND TUBING

## Section 1

## DEFINITIONS

### 1.1 CONDUIT FITTING

An accessory which serves to complete a conduit system.

NEMA Standard 1-26-1967.

### 1.2 CONDUIT COUPLING

A fitting intended for joining:

1. Two lengths of rigid PVC conduit, or
2. A length of rigid PVC conduit to a rigid PVC elbow or other bend, or
3. A length of rigid PVC conduit or a rigid PVC elbow or other bend to a box (in conjunction with a junction-box adapter).

NEMA Standard 1-26-1967.

### 1.3 JUNCTION BOX ADAPTER

An adapter intended for connecting a length of rigid PVC conduit, or a rigid PVC elbow or bend, to a junction box.

NEMA Standard 1-26-1967.

### 1.4 FEMALE ADAPTER

A fitting intended for joining a length of rigid PVC conduit or a rigid PVC elbow or other bend to threaded metallic conduit or other male threaded devices.

NEMA Standard 1-26-1967.

### 1.5 MALE TERMINAL ADAPTER

A fitting intended for joining a length of rigid PVC conduit or a rigid PVC elbow or other bend to a knockout hole of a box, or to a threaded hub on a metal box, or to any other junction box.

NEMA Standard 1-26-1967.

### 1.6 REDUCER

A fitting intended for joining lengths of two different sizes of rigid PVC conduit, rigid PVC elbow, or other bend.

NEMA Standard 1-26-1967.

### 1.7 CAP

A fitting intended for closing the ends of unused lengths of rigid PVC conduit.

NEMA Standard 1-26-1967.

### 1.8 BELL END

A fitting intended to provide a bushed opening at the open end of a length of rigid PVC conduit.

NEMA Standard 1-26-1967.

Copyright National Electrical Manufacturers Association
Provided by IHS under license with NEMA
No reproduction or networking permitted without license from IHS
Not for Resale

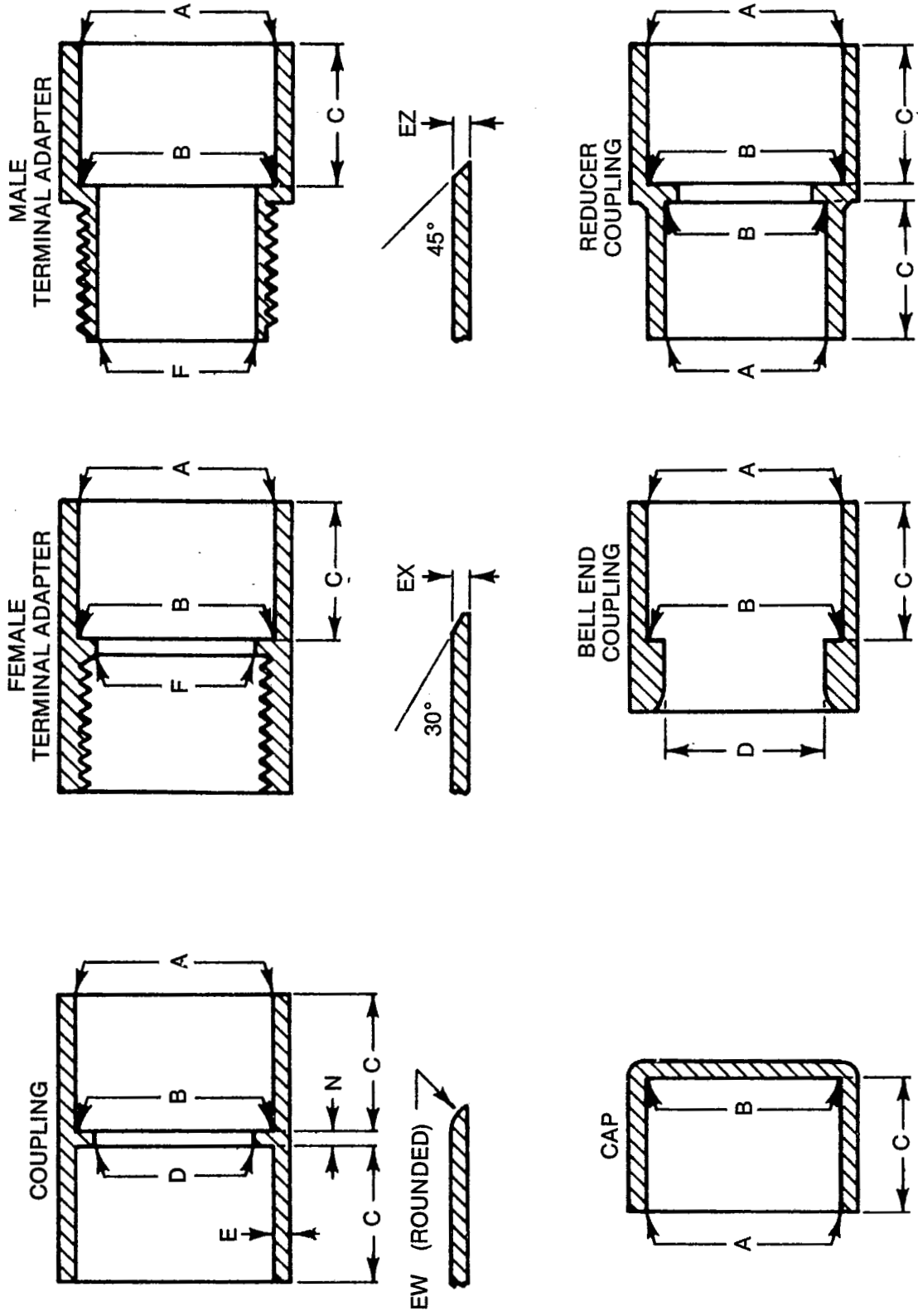


Copyright National Electrical Manufacturers Association
Provided by IHS under license with NEMA
No reproduction or networking permitted without license from IHS

Not for Resale

# Section 2

# GENERAL

## 2.1 APPLICATIONS

Type I—Designed to be encased in concrete when installed.

Type II—Designed for underground installation without encasement in concrete.

Type III—Designed for normal-duty applications above ground.

Type IV—Designed for heavy-duty applications above ground.

NEMA Standard 1-26-1967.

## 2.2 MATERIALS

Fittings shall be fabricated from extruded stock or shall be molded. They shall be made from rigid PVC compounds meeting the requirements of ASTM D 1784.

NEMA Standard 1-26-1967.

## 2.3 NOMINAL SIZES

The nominal sizes of fittings shall be ½, ¾, 1, 1¼, 1½, 2, 2½, 3, 3½, 4, 5 and 6 inches.

NEMA Standard 1-26-1967.

## 2.4 DIMENSIONS

Dimensions of fittings shall meet the requirements of Table 2-1 when determined in accordance with 4.2.

NEMA Standard 7-12-1978.

## 2.5 DEPTH OF PENETRATION

Fittings shall be provided with a stop at the socket bottom to limit the depth of penetration of the conduit and, in the case of female adapters, to limit the depth of penetration of threaded rigid metallic conduit.

NEMA Standard 1-26-1967.

## 2.6 THREADS

External and internal taper threads shall meet the requirements of Table 2-2 when measured in accordance with 4.3.

External and internal straight threads shall meet the requirements of Table 2-3 when measured in accordance with 4.3.

Internal molded threads at the face of the fittings and the entering ends of external threads shall have a *Blunt Start* produced by making the width of the thread at the start approximately 50 to 75 percent of the full thread to provide for easy entrance in making a joint and for protection of the thread. The *Blunt Start* shall be included in the measurement of the thread length. (The *Blunt Start* was formerly known as the *Higbee Cut*.)

The entrance to machined threads shall be a 45-degree chamfer at least one thread deep.

NEMA Standard 7-12-1978.

Copyright National Electrical Manufacturers Association
Provided by IHS under license with NEMA
No reproduction or networking permitted without license from IHS
Not for Resale

Copyright National Electrical Manufacturers Association
Provided by IHS under license with NEMA
No reproduction or networking permitted without license from IHS
Not for Resale



## Table 2-1
## SIZES AND DIMENSIONS OF PVC FITTINGS

| Nominal Size of Fittings, Inches | A | | | B | | | C | D | E | EW | EX | EZ | N | F | |
|---|---|---|---|---|---|---|---|---|---|---|---|---|---|---|---|
| | Socket Entrance Diameter, Inches | | | Socket Bottom Diameter, Inches | | | | | | | | | | | |
| | Average Diameter | Plus or Minus Tolerance on Average Diameter | Maximum Total Out of Roundness Tolerance | Average Diameter | Plus or Minus Tolerance on Average Diameter | Maximum Total Out of Roundness Tolerance | Socket Length Minimum | Inside Diameter Minimum | Wall Thickness Minimum | Entrance Minimum | Entrance Minimum | Entrance Minimum | Minimum | Throat Diameters in Male and Female Adapters Maximum | Throat Diameters in Male and Female Adapters Minimum |
| 1/2 | 0.852 | 0.004 | 0.016 | 0.836 | 0.004 | 0.016 | 0.652 | 0.728 | 0.095 | 1/32 | 1/32 | 1/32 | 3/32 | 0.622 | 0.591 |
| 3/4 | 1.064 | 0.004 | 0.020 | 1.046 | 0.004 | 0.020 | 0.719 | 0.840 | 0.095 | 1/32 | 1/32 | 1/32 | 3/32 | 0.824 | 0.783 |
| 1 | 1.330 | 0.005 | 0.020 | 1.310 | 0.005 | 0.020 | 0.875 | 1.205 | 0.100 | 1/16 | 1/16 | 1/16 | 3/32 | 1.049 | 0.997 |
| 1 1/4 | 1.677 | 0.005 | 0.024 | 1.655 | 0.005 | 0.024 | 0.938 | 1.532 | 0.120 | 1/16 | 1/16 | 1/16 | 3/32 | 1.380 | 1.311 |
| 1 1/2 | 1.918 | 0.006 | 0.024 | 1.894 | 0.006 | 0.024 | 1.062 | 1.752 | 0.120 | 1/16 | 1/16 | 1/16 | 3/32 | 1.610 | 1.529 |
| 2 | 2.393 | 0.006 | 0.024 | 2.369 | 0.006 | 0.024 | 1.125 | 2.187 | 0.130 | 1/16 | 1/16 | 1/16 | 3/32 | 2.067 | 1.964 |
| 2 1/2 | 2.890 | 0.007 | 0.030 | 2.868 | 0.007 | 0.030 | 1.469 | 2.670 | 0.165 | 3/32 | 1/8 | 1/8 | 3/16 | 2.469 | 2.346 |
| 3 | 3.515 | 0.008 | 0.030 | 3.492 | 0.008 | 0.030 | 1.594 | 3.365 | 0.216 | 3/32 | 1/8 | 1/8 | 3/16 | 3.068 | 2.915 |
| 3 1/2 | 4.015 | 0.008 | 0.030 | 3.992 | 0.008 | 0.030 | 1.687 | 3.760 | 0.226 | 3/32 | 1/8 | 1/8 | 3/16 | 3.548 | 3.371 |
| 4 | 4.515 | 0.009 | 0.030 | 4.491 | 0.009 | 0.030 | 1.750 | 4.250 | 0.237 | 3/32 | 1/8 | 1/8 | 3/16 | 4.026 | 3.825 |
| 5 | 5.593 | 0.010 | 0.060 | 5.553 | 0.010 | 0.060 | 1.937 | 5.097 | 0.258 | 3/32 | 1/8 | 1/8 | 3/16 | 5.047 | 4.795 |
| 6 | 6.658 | 0.011 | 0.060 | 6.614 | 0.011 | 0.060 | 2.125 | 6.115 | 0.280 | 1/8 | 3/16 | 3/16 | 1/4 | 6.065 | 5.762 |

All dimensions in inches.
For illustration of letter dimensions see page 5.

*(continued)*



6470247 0004114 3

Copyright National Electrical Manufacturers Association
Provided by IHS under license with NEMA
No reproduction or networking permitted without license from IHS

## Table 2-1 (cont.)
## SIZES AND DIMENSIONS OF PVC FITTINGS IN METRIC UNITS

| Nominal Size of Fittings, Inches | A Socket Entrance Diameter, Millimeters | | | B Socket Bottom Diameter, Millimeters | | | C | D | E | EW | EX | EZ | N | F | |
|---|---|---|---|---|---|---|---|---|---|---|---|---|---|---|---|
| | Average Diameter | Plus or Minus Tolerance on Average Diameter | Maximum Total Out of Roundness Tolerance | Average Diameter | Plus or Minus Tolerance on Average Diameter | Maximum Total Out of Roundness Tolerance | Socket Length | Inside Diameter | Wall Thickness | Entrance | | | | Throat Diameters in Male and Female Adapters | |
| | | | | | | | Minimum | Minimum | Minimum | Minimum | Minimum | Minimum | Minimum | Maximum | Minimum |
| 1/2 | 21.64 | 0.010 | 0.41 | 21.23 | 0.010 | 0.41 | 16.56 | 18.49 | 2.41 | 0.79 | 0.79 | 0.79 | 2.38 | 15.80 | 15.01 |
| 3/4 | 27.03 | 0.010 | 0.51 | 26.57 | 0.010 | 0.51 | 18.26 | 21.34 | 2.41 | 0.79 | 0.79 | 0.79 | 2.38 | 20.93 | 19.89 |
| 1 | 33.78 | 0.013 | 0.51 | 33.27 | 0.013 | 0.51 | 22.22 | 30.61 | 2.54 | 1.59 | 1.59 | 1.59 | 2.38 | 26.64 | 25.32 |
| 1 1/4 | 42.60 | 0.013 | 0.61 | 42.04 | 0.013 | 0.61 | 23.83 | 38.91 | 3.05 | 1.59 | 1.59 | 1.59 | 2.38 | 35.05 | 33.30 |
| 1 1/2 | 48.72 | 0.015 | 0.61 | 48.11 | 0.015 | 0.61 | 26.97 | 44.50 | 3.05 | 1.59 | 1.59 | 1.59 | 2.38 | 40.89 | 38.84 |
| 2 | 60.78 | 0.015 | 0.61 | 60.17 | 0.015 | 0.61 | 28.58 | 55.55 | 3.30 | 1.59 | 1.59 | 1.59 | 2.38 | 52.50 | 49.89 |
| 2 1/2 | 70.41 | 0.018 | 0.76 | 72.85 | 0.018 | 0.76 | 37.31 | 67.82 | 4.19 | 2.38 | 3.18 | 3.18 | 4.76 | 62.71 | 59.59 |
| 3 | 89.28 | 0.020 | 0.76 | 88.70 | 0.020 | 0.76 | 40.49 | 85.47 | 5.49 | 2.38 | 3.18 | 3.18 | 4.76 | 77.93 | 74.04 |
| 3 1/2 | 101.98 | 0.020 | 0.76 | 101.40 | 0.020 | 0.76 | 42.85 | 95.50 | 5.74 | 2.38 | 3.18 | 3.18 | 4.76 | 90.12 | 85.62 |
| 4 | 114.68 | 0.023 | 0.76 | 114.07 | 0.023 | 0.76 | 44.45 | 107.95 | 6.02 | 2.38 | 3.18 | 3.18 | 4.76 | 102.26 | 97.16 |
| 5 | 142.06 | 0.025 | 1.52 | 141.05 | 0.025 | 1.52 | 49.20 | 129.46 | 6.55 | 2.38 | 3.18 | 3.18 | 4.76 | 128.19 | 121.79 |
| 6 | 169.11 | 0.028 | 1.52 | 168.00 | 0.028 | 1.52 | 53.98 | 155.32 | 7.11 | 3.18 | 4.76 | 4.76 | 6.35 | 154.05 | 146.35 |

All dimensions in millimeters (except nominal sizes).
For illustration of letter dimensions see page 5.

Not for Resale

## Table 2-2
## EXTERNAL AND INTERNAL TAPER THREADS

| Nominal Size of Fitting, Inches | Threads per Inch | External Threads: Pitch Diameter*, Inches, at End of Fitting, Taper, 3/4 Inch per Foot | External Threads: Length of Thread, Inches, Effective $L_2$ | External Threads: Length of Thread, Inches, Overall $L_4$* | Internal Threads American National Pipe Taper (NPT) Thread Gage† Will Enter: Maximum Turns | Internal Threads American National Pipe Taper (NPT) Thread Gage† Will Enter: Minimum Turns |
|---|---|---|---|---|---|---|
| (1) | (2) | (3) | (4) | (5) | (6) | (7) |
| 1/2 | 14 | 0.7584 | 0.53 | 0.78 | 9 | 6 |
| 3/4 | 14 | 0.9677 | 0.55 | 0.79 | 9 | 6 |
| 1 | 11 1/2 | 1.2136 | 0.68 | 0.98 | 9 | 6 |
| 1 1/4 | 11 1/2 | 1.5571 | 0.71 | 1.01 | 10 | 6 |
| 1 1/2 | 11 1/2 | 1.7961 | 0.72 | 1.03 | 10 | 6 |
| 2 | 11 1/2 | 2.2690 | 0.76 | 1.06 | 10 | 6 |
| 2 1/2 | 8 | 2.7195 | 1.14 | 1.57 | 10 | 6 |
| 3 | 8 | 3.3406 | 1.20 | 1.63 | 10 | 6 |
| 3 1/2 | 8 | 3.8375 | 1.25 | 1.68 | 11 | 7 |
| 4 | 8 | 4.3344 | 1.30 | 1.73 | 11 | 7 |
| 5 | 8 | 5.3907 | 1.41 | 1.84 | 11 | 7 |
| 6 | 8 | 6.4461 | 1.51 | 1.95 | 11 | 7 |

• The applicable tolerances are:
*Thread Length (L4):* ± one thread.
*Pitch Diameter:* ± one turn is the maximum variation permitted from gaging face of the working thread gages. This is equivalent to ± 1 1/2 turns from basic dimensions since a variation of ± 1/2 turn from basic dimensions is permitted in working gages. The above pitch diameter for external threads with a taper of 3/4 inch per foot is identical with the specifications in ANSI B2.1, *Pipe Threads (Except Dryseal)*, and the NBS (National Bureau of Standards) handbook entitled *Screw-thread Standards for Federal Services*, H28.

† See ANSI B2.1.

NOTE 1—At least five full threads shall be provided unless otherwise specified.

NOTE 2—Metric conversion units are not applicable to these American National Thread dimensions.

Copyright National Electrical Manufacturers Association
Provided by IHS under license with NEMA
No reproduction or networking permitted without license from IHS
Not for Resale

## Table 2-3
## EXTERNAL AND INTERNAL STRAIGHT THREADS

| Nominal Size of Fitting, Inches | Threads per Inch | External Threads—Pitch Diameter, Inches | | Internal Threads—Pitch Diameter, Inches, of Straight Internal Threads for | | | |
|---|---|---|---|---|---|---|---|
| | | | | Bushings and Other Fittings | | Locknuts | |
| | | Maximum | Minimum | Minimum | Maximum | Minimum | Maximum |
| (1) | (2) | (3) | (4) | (5) | (6) | (7) | (8) |
| 1/2 | 14 | 0.776 | 0.770 | 0.781 | 0.788 | 0.801 | 0.808 |
| 3/4 | 14 | 0.987 | 0.981 | 0.992 | 0.999 | 1.011 | 1.018 |
| 1 | 11 1/2 | 1.236 | 1.228 | 1.244 | 1.252 | 1.266 | 1.274 |
| 1 1/4 | 11 1/2 | 1.581 | 1.573 | 1.588 | 1.596 | 1.611 | 1.619 |
| 1 1/2 | 11 1/2 | 1.820 | 1.812 | 1.827 | 1.835 | 1.850 | 1.858 |
| 2 | 11 1/2 | 2.294 | 2.286 | 2.301 | 2.309 | 2.323 | 2.332 |
| 2 1/2 | 8 | 2.758 | 2.748 | 2.769 | 2.781 | 2.801 | 2.813 |
| 3 | 8 | 3.385 | 3.375 | 3.396 | 3.408 | 3.428 | 3.439 |
| 3 1/2 | 8 | 3.885 | 3.875 | 3.896 | 3.908 | 3.928 | 3.940 |
| 4 | 8 | 4.383 | 4.373 | 4.394 | 4.406 | 4.426 | 4.438 |
| 5 | 8 | 5.445 | 5.435 | 5.456 | 5.468 | 5.488 | 5.500 |
| 6 | 8 | 6.502 | 6.492 | 6.513 | 6.525 | 6.545 | 6.557 |

NOTE 1—All dimensions are rounded off to the nearest third place decimal.
NOTE 2—Metric conversion units are not applicable to these American National Thread dimensions.

Copyright National Electrical Manufacturers Association
Provided by IHS under license with NEMA
No reproduction or networking permitted without license from IHS
Not for Resale

# Section 3

# PERFORMANCE REQUIREMENTS

## 3.1 MATERIAL

Mechanical strength, heat resistance, flammability, and chemical resistance shall meet the requirements of ASTM D 1784.

NEMA Standard 1-26-1967.

## 3.2 BENDING

A PVC conduit coupling, or reducer, or an assembled male-female terminal adapter combination shall not be damaged or separated from the conduit when tested in accordance with 4.4.

NEMA Standard 1-26-1967.

## 3.3 AXIAL PULL TEST ON JOINTS

Each method of joining lengths of EPC-PVC and EPT-PVC to the appropriate fittings shall result in a connection which is not damaged or separated by the test described in 4.5. If failure of the fitting or conduit occurs prior to failure at the joint, the performance of the joint shall be considered to meet the requirements of this standard.

NEMA Standard 1-26-1967.

## 3.4 WORKMANSHIP

Fittings shall be homogenous throughout and free from visible cracks, holes, foreign inclusions, or other injurious defects.

NEMA Standard 1-26-1967.

## 3.5 MOLDING PROCESS

The process of molding shall result in fittings, the surface of which do not exhibit any evidence of incomplete fusion after immersion of the molded fitting in anhydrous acetone in accordance with 4.6.

The fitting shall not exhibit flaking or peeling over most of the interior or exterior surfaces and shall not split. The weld (bond) line shall be uniform in width and depth and shall not be positively recessed below adjacent surfaces such that there is a definite crack or separation in the material.

NEMA Standard 1-27-1982.

## 3.6 LOW TEMPERATURE HANDLING

Fittings shall not shatter, chip, or crack when tested in accordance with 4.7.

NEMA Standard 1-27-1982.

Copyright National Electrical Manufacturers Association
Provided by IHS under license with NEMA
No reproduction or networking permitted without license from IHS

Not for Resale

# Section 4

# TEST METHODS

## 4.1 CONDITIONING, TEST CONDITIONS, AND SAMPLING

### 4.1.1 Conditioning Test Specimens

When conditioning is required, the test specimens shall be conditioned in accordance with Procedure A in ASTM D 618 at 73.4° ± 3.6°F (23° ± 2°C) and 50 ± 2 percent relative humidity for not less than 48 hours prior to test.

### 4.1.2 Test Conditions

Tests shall be conducted at 73.4° ± 3.6°F (23° ± 2°C) and 50 ± 2 percent relative humidity unless otherwise specified.

### 4.1.3 Sampling

Samples shall be selected at random.

NEMA Standard 7-12-1978.

## 4.2 DIMENSIONS

External dimensions shall be measured with good quality micrometers or vernier calipers accurate to at least ± 0.001 in (± 0.02 mm). Internal dimensions shall be measured with internal micrometers or telescoping gages accurate to at least ± 0.001 in (± 0.02 mm). Lengths shall be measured with a good quality commercial scale calibrated in $\frac{1}{32}$-in (1 mm) increments.

Average diameters (outside diameters, inside diameters, and socket diameters) shall be determined by obtaining the minimum diameter and the maximum diameter by actual measurements and averaging them using the formula:

Average diameter = ½ (maximum diameter + minimum diameter)

The maximum total out-of-roundness tolerances given for socket diameters in Table 2-1 apply to the average diameter of the socket as determined in accordance with the preceding paragraph. For example, if the average diameter of 1-in (nominal size) fittings is 1.326 in (33.68 mm), then the measured diameters of the socket due to ovality can be 1.336 in (33.93 mm) maximum and 1.316 in (33.43 mm) minimum.

NEMA Standard 7-12-1978.

## 4.3 THREADS

Threads shall be measured in accordance with the following methods of gaging, using gages having the dimensions given in ANSI B2.1.

### 4.3.1 Gaging External Taper Threads

The ring gage shall be screwed up tight by hand on the external thread. The thread is within the permissible tolerance when the gaging face of the working ring gage is not more than 1½ turns, large or small, from being flush with the face of the fitting, after correction has been made for any variation in the gage from basic dimensions.

### 4.3.2 Gaging Internal Taper Threads

The plug gage shall be screwed up tight by hand into the fitting. The thread is within the permissible tolerance when the gaging notch of the working plug gage is not more than 1½ turns, large or small, from being flush with the end of the thread, after correction has been made for any variation in the gage from basic dimensions.

### 4.3.3 Gaging Chamfered, Countersunk, or Recessed Threads

When the internal thread is chamfered, countersunk, or recessed, the notch shall be flush with the bottom of the chamfer, which shall be considered as being the intersection of the chamfer cone and the pitch cone of the thread.

NOTE—Usually this depth is equal to ½ thread from the face of the fitting. (This note has been approved as Authorized Engineering Information.)

### 4.3.4 Gaging of Straight Threads

*Types of Gages*—Gages to properly control the production of straight threads shall be either straight "GO" or "NO GO" gages or taper plug gages (see ANSI B2.1).

*Gage Dimensions*—The straight "GO" and "NO GO" plug and ring gages used for checking mechanical joint threads (see Tables 6 and 7 in ANSI B2.1) shall be made to the pitch diameter limits specified in those tables in accordance with standard practice for straight thread gages.

*Use of Straight and Taper Gages*—Straight "GO" and "NO GO" gages shall be used for all types of threaded joints where both the external and internal threads are straight. Taper plug gages shall be used for the internal threads of all types of mechanical joints where the external thread is tapered and the internal thread is straight.

NEMA Standard 1-26-1967.

Copyright National Electrical Manufacturers Association
Provided by IHS under license with NEMA
No reproduction or networking permitted without license from IHS
Not for Resale

**Table 4-1**
**BENDING LOAD**

| Nominal Size of Fitting, Inches | Bending Load, lb (kg) |
|---|---|
| 1/2 | 20 (9) |
| 3/4 | 35 (16) |
| 1 | 50 (23) |
| 1 1/4 | 75 (34) |
| 1 1/2 | 85 (39) |
| 2 | 110 (50) |
| 2 1/2 | 110 (50) |
| 3 | 110 (50) |
| 3 1/2 | 110 (50) |
| 4 | 110 (50) |
| 5 | . . . |
| 6 | . . . |

NEMA Standard 7-12-1978.

### 4.4 BENDING

Samples of PVC conduit fittings shall be solvent cemented to 18-in (457 mm) lengths of EPC-PVC and shall be tested no sooner than 24 hours after assembly.

For testing and coupling, the assembly, with the coupling at the center, shall be placed on supports which are 30-in (762 mm) apart as illustrated in Fig. 4-1. The load indicated in Table 4-1 shall be suspended from the center of the coupling for 60 seconds, during which time the entire assembly shall be rotated through one complete revolution about its major axis.

NEMA Standard 7-12-1978.

### 4.5 AXIAL PULL TEST ON JOINTS

Two 18-in (457 mm) lengths of each size of EPC-PVC shall be joined by each of the methods recommended by the manufacturer. Each assembly shall be tested separately with cylindrical plugs inserted in its ends to prevent collapse of the conduit. Each plug shall fit snugly for its entire length. Each assembly shall be secured in the jaws of a power-driven testing machine on which the grips, when loaded, separate at a rate of ½-in (13 mm) per minute. The load applied to the assembly by the machine shall be increased to the level indicated in Table 4-2 and then held for 1 minute.

NEMA Standard 7-12-1978.

### 4.6 MOLDING PROCESS TEST ▲

With appropriate attention to the risks involved in handling testing reagents (see paragraph below)—unless otherwise specified, one specimen per lot, extrusion condition and molding condition, shall be tested by immersion in accordance with ASTM D2152 and then examined for conformance with the requirements of 3.5.

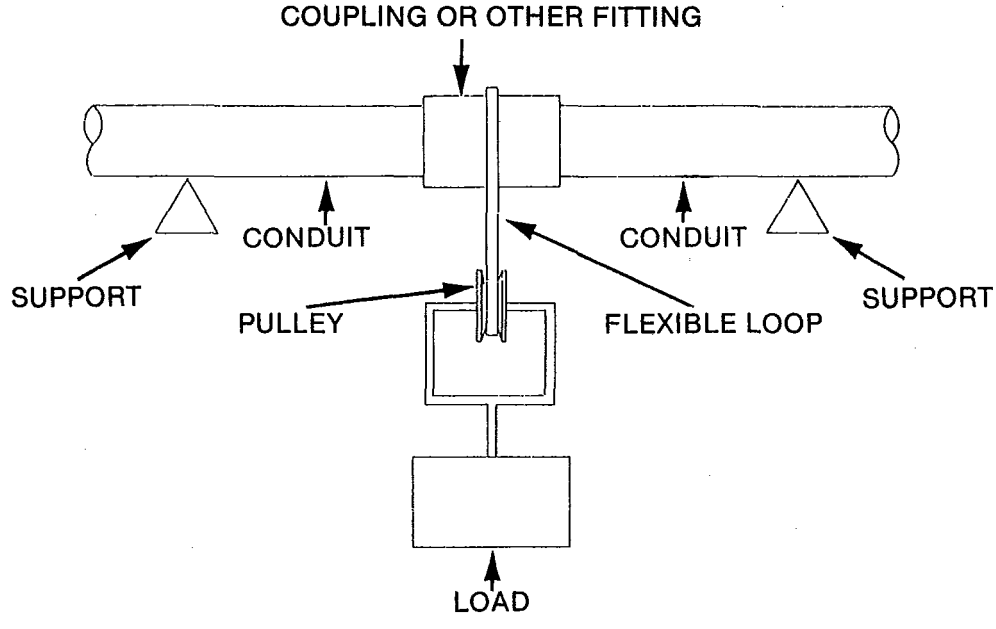


**Fig. 4-1**
**BENDING-TEST ARRANGEMENT**

▲ Revised 5-16-1984.

Copyright National Electrical Manufacturers Association
Provided by IHS under license with NEMA
No reproduction or networking permitted without license from IHS
Not for Resale

Because acetone, dimethyl ketone $(CH_3)_2CO$, is an extremely volatile liquid, the vapors of which form explosive mixtures with air, it is imperative that open flames, glowing cigarettes, and other sources of ignition be kept away. Acetone and acetone solutions are toxic, damaging to clothing, and rapidly absorb moisture from the air, the skin, etc. They shall not be allowed to touch the skin, nor shall the vapors of these substances be inhaled. Because acetone with moisture in it is not effective in this test, the test shall be conducted with the specimens in a covered container. Acetone can be dehydrated by filtering it through anhydrous calcium sulphate $CaSO_4$ (this sentence approved as Authorized Engineering Information).

NEMA Standard 5-16-1984.

**Table 4-2**
**AXIAL LOAD FOR PULL TEST ON JOINTS**

| Nominal Size of Fitting, Inches | Axial Load lb (kg) |
|---|---|
| 1/2 | 300 (136) |
| 3/4 | 450 (204) |
| 1 | 600 (272) |
| 1 1/4 | 700 (318) |
| 1 1/2 | 800 (363) |
| 2 | 1000 (454) |
| 2 1/2 | 1000 (454) |
| 3 | 1000 (454) |
| 3 1/2 | 1000 (454) |
| 4 | 1000 (454) |
| 5 | . . . |
| 6 | . . . |

## 4.7 LOW TEMPERATURE HANDLING TEST

Three specimens of each fitting shall be conditioned in circulating air at a temperature of $-4 \pm 3.6°F$ $(-20 \pm 2°C)$ for 5 hours. The specimens shall be removed from the cold chamber and each of them shall be dropped twice, in quick succession, from a height of 5 feet (1.5 m) onto a concrete floor. During the first drop, the specimen shall make an angle of approximately 45 degrees with the floor so that one end of it reaches the floor first. During the second drop, the specimen shall fall parallel to the floor.

NEMA Standard 1-27-1982.

## 4.8 RETESTS

In case of failure under any of the foregoing tests, the test or tests under which the fitting failed shall be repeated twice, and the fitting shall be regarded as conforming to these standards if the results of the two additional tests are satisfactory. The fitting shall be regarded as not conforming to these standards if the results of either of the two additional tests are unsatisfactory.

NEMA Standard 1-26-1967.

● Editorially revised 9-26-1984.

Copyright National Electrical Manufacturers Association
Provided by IHS under license with NEMA
No reproduction or networking permitted without license from IHS
Not for Resale

# Section 5

# MARKINGS

## 5.1 MARKINGS

Fittings shall be marked with the following:

1. Manufacturer's name or trademark.
2. Material designation.
3. Size.
4. Catalog number or equivalent, where practicable.

Where the size of the fitting does not permit complete marking, markings may be omitted in the following sequence: catalog number, size, and material designation.

Markings shall be molded, hot stamped, or applied to fittings by any other suitable method such as printing.

Where markings are recessed, they shall not cause cracks or reduce the wall thickness below the minimum specified in Table 2-1.

NEMA Standard 1-26-1967.

Copyright National Electrical Manufacturers Association
Provided by IHS under license with NEMA
No reproduction or networking permitted without license from IHS

Not for Resale

# Appendix A

## REFERENCED STANDARDS

In this publication, reference is made to the standards listed below. Copies are available from the indicated sources.

I

**American National Standards Institute**
1430 Broadway
New York, NY 10018

B2.1-1968 *Pipe Threads (Except Dryseal)*

II

**American Society for Testing and Materials**
1916 Race Street
Philadelphia, PA 19103

D 618-61 (1977) *Conditioning Plastics and Electrical Insulating Materials for Testing*

D 1784-75 *Rigid Poly(Vinyl Chloride) (PVC) Compounds and Chlorinated Poly(Vinyl Chloride) (PVC)*

D 2152-80 *Degree of Fusion of Extruded Poly (Vinyl Chloride) (PVC) Type and Molded Fittings by Acetone Immersion*

III

**National Bureau of Standards**
Technology Building
Washington, DC 20234

H28 *Screw-thread Standards for Federal Services*

IV

**National Electrical Manufacturers Association**
2101 L Street, N.W.
Washington, DC 20037

TC 2-1978 *Electrical Plastic Tubing (EPT) and Conduit (EPC-40 and EPC-80)*

Copyright National Electrical Manufacturers Association
Provided by IHS under license with NEMA
No reproduction or networking permitted without license from IHS
Not for Resale

# NEMA STANDARDIZATION

The purpose of NEMA Standards, their classification and status are set forth in certain clauses of the NEMA Bylaws, which are quoted below:

## Purpose of Standards

National Electrical Manufacturers Association Standards are adopted in the public interest and are designed to eliminate misunderstandings between the manufacturer and the purchaser and to assist the purchaser in selecting and obtaining the proper product for its particular need. Existence of a National Electrical Manufacturers Association Standard does not in any respect preclude any member or nonmember from manufacturing or selling products not conforming to the standard.

*(Bylaw—Art. V, Sec. 1)*

## Definition of a Standard

A standard of the National Electrical Manufacturers Association defines a product, process or procedure with reference to one or more of the following: nomenclature, composition, construction, dimensions, tolerances, safety, operating characteristics, performance, rating, testing, and the service for which they are designed.

*(Bylaw—Art. V, Sec. 2, Subsection A)*

## Dimensions

Where dimensions are given for interchangeability purposes, alternate dimensions satisfying the other provisions of the standards publication may be capable of otherwise equivalent performance.

*(NEMA Policy Memorandum 84-2, dated June 7, 1984)*

## Classes of Standards

National Electrical Manufacturers Association Standards are of two classes:

1. NEMA Standard, which relates to a product commercially standardized and subject to repetitive manufacture, which standard has been approved by at least 90 percent of the members of the Subdivision eligible to vote thereon;
2. Suggested Standard for Future Design, which may not have been regularly applied to a commercial product, but which suggests a sound engineering approach to future development, which standard has been approved by at least two-thirds of the members of the Subdivision eligible to vote thereon.

*(Bylaw—Art. V, Sec. 2, Subsection B)*

## Authorized Engineering Information

Authorized Engineering Information consists of explanatory data and other engineering information of an informative character not falling within the classification of NEMA Standard or Suggested Standard for Future Design.

*(Bylaw—Art. V, Sec. 6, 1st Sentence)*

## Official Standards Proposal

An Official Standards Proposal is an official draft of a proposed standard which is formally recommended to an outside organization(s) for consideration, comment and/or approval.

*(Bylaw—Art. V, Sec. 4, Subsection A)*

## Identification of Status

Standards in NEMA Standards Publications are identified in the foreword or following each standard as "NEMA Standard" or "Suggested Standard for Future Design." These indicate the status of the standard. These words are followed by a date which indicates when the standard was adopted in its present form by the Association.

The material identified as "Authorized Engineering Information" and "Official Standards Proposal" is designated similarly.

Copyright National Electrical Manufacturers Association
Provided by IHS under license with NEMA
No reproduction or networking permitted without license from IHS
Not for Resale

# PLASTIC CONDUIT, DUCT AND ACCESSORIES SECTION OF THE NATIONAL ELECTRICAL MANUFACTURERS ASSOCIATION

## MEMBER COMPANIES

Can-Tex Industries
Mineral Wells, TX 76067

Carlon, An Indian Head Company
Beachwood, OH 44122

Certainteed Corporation
Valley Forge, PA 19482

Challenger Electric Materials, Inc.
Parkersburg, WV 26101

Formex Manufacturing, Inc.
Norcross, GA 30071

Hercules Incorporated
Middletown, DE 19709

Koch Fiberglass Products Co.
Wichita, KS 67208

Midwest Plastic Fabricators, Inc.
Chagrin Falls, OH 44022

NVF Company
Fiber Glass Tubular Division
Houston, TX 77038

Robroy Industries, Inc.
Verona, PA 15147

A O Smith-Inland, Inc.
Little Rock, AR 72209

Underground Devices, Inc.
Glenview, IL 60025

Underground Products, Inc.
Troy, MI 48099-3230

Copyright National Electrical Manufacturers Association
Provided by IHS under license with NEMA
No reproduction or networking permitted without license from IHS
Not for Resale