NEMA STANDARDS PUBLICATION NO. TC 3

PVC Fittings for Use With Rigid PVC Conduit and Tubing

NATIONAL ELECTRICAL MANUFACTURERS ASSOCIATION ● 2101 L STREET, N.W., WASHINGTON, D.C. 20037

Copyright National Electrical Manufacturers Association
Provided by IHS under license with NEMA
No reproduction or networking permitted without license from IHS
Not for Resale

TC 3

PVC FITTINGS FOR USE WITH RIGID PVC CONDUIT AND TUBING

Published by:

National Electrical Manufacturers Association
2101 L Street, N.W., Suite 300
Washington, DC 20037

© 1991 by the National Electrical Manufacturers Association

Copyright National Electrical Manufacturers Association
Provided by IHS under license with NEMA
No reproduction or networking permitted without license from IHS
Not for Resale

TABLE OF CONTENTS

		Page
	FOREWORD	i
	SCOPE	ii
Section 1	REFERENCED STANDARDS AND DEFINITIONS	
	Referenced Standards	1
	Definitions	1
Section 2	GENERAL	
	Materials	3
	Nominal Sizes	3
	Dimensions	3
	Depth of Penetration	3
	Threads	3
Section 3	PERFORMANCE REQUIREMENTS	
	Material	11
	Bending	11
	Axial Pull Test on Joints	11
	Workmanship	11
	Low Temperature Handling	11
Section 4	TEST METHODS	
	Conditioning, Test Conditions, and Sampling	12
	Dimensions	12
	Threads	12
	Bending	13
	Axial Pull Test on Joints	13
	Low Temperature Handling Test	14
	Retests	14
Section 5	MARKINGS	15

Copyright National Electrical Manufacturers Association
Provided by IHS under license with NEMA
No reproduction or networking permitted without license from IHS
Not for Resale

Foreword

User needs have been considered throughout the development and revision of these standards.

The purpose of these standards for Polyvinyl Chloride (PVC) fittings intended for use with rigid PVC conduit and tubing above and below ground is to inform producers, distributors, engineers, code officials, and users about some of the properties and dimensions of these products and to assist in selecting and obtaining the proper product for a particular need.

The Plastic Conduit, Duct, and Accessories Section of NEMA, through its members, has worked (and continues to work) closely with such organizations as the American Society for Testing and Materials, the Plastic Pipe Institute, the Western Underground Committee, appropriate government agencies, Underwriters Laboratories Inc., and others in the periodic review and revision of these standards for any changes necessary to keep them up-to-date with advancing technology. Proposed or recommended revisions should be submitted to:

Vice President, Engineering
National Electrical Manufacturers Association
2101 L Street, N.W., Suite 300
Washington, DC 20037

Copyright National Electrical Manufacturers Association
Provided by IHS under license with NEMA
No reproduction or networking permitted without license from IHS Not for Resale

Scope

These standards cover PVC plastic fittings intended to be joined in the field by means of a solvent cement system to PVC rigid conduit, tubing, duct, and other fittings, based on the outside diameters given in NEMA Standards Publication No. TC 2–1990.

Included in this publication are requirements for materials, workmanship, dimensions, physical properties, couplings, female adapters, male terminal adapters, junction box adapters, reducers, caps, and bell-end couplings. Methods of marking, inspection, and practices for indicating compliance with these standards are also given. Junction boxes and access fittings are not included.

NOTE: The values stated in U.S. customary units are to be regarded as the standard. The values given in parentheses are for information purposes only.

Copyright National Electrical Manufacturers Association
Provided by IHS under license with NEMA
No reproduction or networking permitted without license from IHS
Not for Resale

PVC FITTINGS FOR USE WITH RIGID PVC CONDUIT AND TUBING

Section 1
REFERENCED STANDARDS AND DEFINITIONS

1.1 REFERENCED STANDARDS

In this publication, reference is made to the standards listed below. Copies are available from the indicated sources.

American National Standards Institute
1430 Broadway
New York, NY 10018

ANSI/ASME B 1.20.1–1983 — *General Purpose Pipe Threads (Inch)*

American Society for Testing and Materials
1916 Race Street
Philadelphia, PA 19103

D 618–61 (R 1981) — *Standard Methods of Conditioning Plastics and Electrical Insulating Materials for Testing*

D 1784–81 — *Standard Specification for Rigid Poly(Vinyl Chloride)(PVC) Compounds and Chlorinated Poly(Vinyl Chloride)(CPVC) Compound*

Government Services Administration
Specification Section
7th and D Streets, S.W., Room 6654
Washington, DC 20407

H28, Part II (1978) — *Screw-Thread Standards for Federal Service*

National Electrical Manufacturers Association
2101 L Street, N.W., Suite 300
Washington, DC 20037

TC 2–1990 — *Electrical Plastic Tubing (EPT) and Conduit (EPC-40 and EPC-80)*

1.2 DEFINITIONS

1.2.1 Conduit Fitting

An accessory that serves to complete a conduit system.
NEMA Standard 1-26-1967.

1.2.2 Conduit Coupling

A fitting intended for joining:
1. Two lengths of rigid PVC conduit, or
2. A length of rigid PVC conduit to a rigid PVC elbow or other bend, or
3. A length of rigid PVC conduit or a rigid PVC elbow or other bend to a box (in conjunction with a junction-box adapter).

NEMA Standard 1-26-1967.

1.2.3 Junction Box Adapter

An adapter intended for connecting a length of rigid PVC conduit, or a rigid PVC elbow or bend, to a junction box.
NEMA Standard 1-26-1967.

1.2.4 Female Adapter

A fitting intended for joining a length of rigid PVC conduit or a rigid PVC elbow or other bend to threaded metallic conduit or other male threaded devices.
NEMA Standard 1-26-1967.

1.2.5 Male Terminal Adapter

A fitting intended for joining a length of rigid PVC conduit or a rigid PVC elbow or other bend to a box

Copyright National Electrical Manufacturers Association
Provided by IHS under license with NEMA
No reproduction or networking permitted without license from IHS
Not for Resale

through a knockout hole using a locknut or to a threaded hub on a metal box or to any other junction box.

NEMA Standard 9-5-1990.

1.2.6 Reducer

A fitting intended for joining lengths of two different sizes of rigid PVC conduit, rigid PVC elbow, or other bend.

NEMA Standard 1-26-1967.

1.2.7 Cap

A fitting intended for closing the ends of unused lengths of rigid PVC conduit.

NEMA Standard 1-26-1967.

1.2.8 Bell End

A fitting intended to provide a bushed opening at the open end of a length of rigid PVC conduit.

NEMA Standard 1-26-1967.

1.2.9 Sweep

A fitting intended to provide a smooth change in direction of a conduit while conforming to bending radii of the conductors involved.

NEMA Standard 9-5-1990.

Copyright National Electrical Manufacturers Association
Provided by IHS under license with NEMA
No reproduction or networking permitted without license from IHS
Not for Resale

Section 2
GENERAL

2.1 MATERIALS

Fittings shall be fabricated from extruded stock or shall be molded. They shall be made from rigid PVC compounds meeting the requirements of ASTM D 1784. Fabricated fittings and sweeps shall be made from conduit at least the equivalent to the conduit used in the system.

NEMA Standard 9-5-1990.

2.2 NOMINAL SIZES

The nominal sizes of fittings shall be ½ ,¾, 1, 1¼, 1 ½, 2, 2 ½, 3, 3 ½, 4, 5, and 6 inches.

NEMA Standard 1-26-1967.

2.3 DIMENSIONS

2.3.1 Fittings

Dimensions of fittings shall meet the requirements of Table 2-1 when determined in accordance with 4.2.

2.3.2 Compression Formed Couplings – Schedule 40

Dimensions of compression formed Schedule 40 couplings shall meet the requirements of Table 2-4 when determined in accordance with 4.2.

2.3.3 Compression Formed Couplings – Schedule 80

Dimensions of compression formed Schedule 80 couplings shall meet the requirements of Table 2-5 when determined in accordance with 4.2.

2.3.4 Elbows – Schedule 40 and Schedule 80

Dimensions of Schedule 40 and Schedule 80 elbows shall meet the requirements of Table 2-6 when determined in accordance with 4.2.

2.3.5 Elbow Tolerances

The inside diameter (ID) and outside diameter (OD) tolerances for Schedule 40 and Schedule 80 elbows shall meet the requirements of Table 2-7 when determined in accordance with 4.2.

NEMA Standard 9-5-1990.

2.4 DEPTH OF PENETRATION

Fittings shall be provided with a stop at the socket bottom to limit the depth of penetration of the conduit and, in the case of female adapters, to limit the depth of penetration of threaded rigid metallic conduit.

NEMA Standard 1-26-1967.

2.5 THREADS

External and internal taper threads shall meet the requirements of Table 2-2 when measured in accordance with 4.3.

External and internal straight threads shall meet the requirements of Table 2-3 when measured in accordance with 4.3.

Internal molded threads at the face of the fittings and the entering ends of external threads shall have a *Blunt Start* produced by making the width of the thread at the start approximately 50 to 75 percent of the full thread to provide for easy entrance in making a joint and for protection of the thread. The *Blunt Start* shall be included in the measurement of the thread length. (The *Blunt Start* was formerly known as the *Higbee Cut.*)

The entrance to machined threads shall be a 45-degree chamfer at least one thread deep.

NEMA Standard 7-12-1978.

Copyright National Electrical Manufacturers Association
Provided by IHS under license with NEMA
No reproduction or networking permitted without license from IHS
Not for Resale

Copyright National Electrical Manufacturers Association
Provided by IHS under license with NEMA
No reproduction or networking permitted without license from IHS
Not for Resale

Table 2-1
SIZES AND DIMENSIONS OF PVC FITTINGS*

Nominal Size of Fittings, Inches	A			B			C	D	E	EW	EX	EZ	N	F	
	Socket Entrance Diameter			Socket Bottom Diameter			Socket Length	Inside Diameter	Wall Thickness	Entrance				Throat Diameters in Male and Female Adapters	
	Average Diameter	Plus or Minus Tolerance on Average Diameter	Maximum Total Out of Roundness Tolerance	Average Diameter	Plus or Minus Tolerance on Average Diameter	Maximum Total Out of Roundness Tolerance	Minimum							Maximum	Minimum
Inches															
½	0.852	0.004	0.016	0.836	0.004	0.016	0.652	0.630	0.095	1/32	1/32	1/32	3/32	0.622	0.591
¾	1.064	0.004	0.020	1.046	0.004	0.020	0.719	0.834	0.095	1/32	1/32	1/32	3/32	0.824	0.783
1	1.330	0.005	0.020	1.310	0.005	0.020	0.875	1.059	0.100	1/16	1/16	1/16	3/32	1.049	0.997
1¼	1.677	0.005	0.024	1.655	0.005	0.024	0.938	1.392	0.120	1/16	1/16	1/16	3/32	1.380	1.311
1½	1.918	0.006	0.024	1.894	0.006	0.024	1.062	1.622	0.120	1/16	1/16	1/16	3/32	1.610	1.529
2	2.393	0.006	0.024	2.369	0.006	0.024	1.125	2.079	0.130	1/16	1/16	1/16	3/32	2.067	1.964
2½	2.890	0.007	0.030	2.868	0.007	0.030	1.469	2.484	0.165	3/32	1/8	1/8	3/16	2.469	2.346
3	3.515	0.008	0.030	3.492	0.008	0.030	1.594	3.083	0.216	3/32	1/8	1/8	3/16	3.068	2.915
3½	4.015	0.008	0.030	3.992	0.008	0.030	1.687	3.598	0.226	3/32	1/8	1/8	3/16	3.548	3.371
4	4.515	0.009	0.030	4.491	0.009	0.030	1.750	4.076	0.237	3/32	1/8	1/8	3/16	4.026	3.825
5	5.593	0.010	0.060	5.553	0.010	0.060	1.937	5.097	0.258	3/32	1/8	1/8	3/16	5.047	4.795
6	6.658	0.011	0.060	6.614	0.011	0.060	2.125	6.115	0.280	1/8	3/16	3/16	1/4	6.065	5.762
Millimeters															
½	21.64	0.010	0.41	21.23	0.010	0.41	16.56	16.00	2.41	0.79	0.79	0.79	2.38	15.80	15.01
¾	27.03	0.010	0.51	26.57	0.010	0.51	18.26	21.18	2.41	0.79	0.79	0.79	2.38	20.93	19.89
1	33.78	0.013	0.51	33.27	0.013	0.51	22.22	26.90	2.54	1.59	1.59	1.59	2.38	26.64	25.32
1¼	42.60	0.013	0.61	42.04	0.013	0.61	23.83	35.36	3.05	1.59	1.59	1.59	2.38	35.05	33.30
1½	48.72	0.015	0.61	48.11	0.015	0.61	26.97	41.20	3.05	1.59	1.59	1.59	2.38	40.89	38.84
2	60.78	0.015	0.61	60.17	0.015	0.61	28.58	52.81	3.30	1.59	1.59	1.59	2.38	52.50	49.89
2½	70.41	0.018	0.76	72.85	0.018	0.76	37.31	36.09	4.19	2.38	3.18	3.18	4.76	62.71	59.59
3	89.28	0.020	0.76	88.70	0.020	0.76	40.49	78.31	5.49	2.38	3.18	3.18	4.76	77.93	74.04
3½	101.98	0.020	0.76	101.40	0.020	0.76	42.85	91.39	5.74	2.38	3.18	3.18	4.76	90.12	85.62
4	114.68	0.023	0.76	114.07	0.023	0.76	44.45	103.53	6.02	2.38	3.18	3.18	4.76	102.26	97.16
5	142.06	0.025	1.52	141.05	0.025	1.52	49.20	129.46	6.55	2.38	3.18	3.18	4.76	128.19	121.79
6	169.11	0.028	1.52	168.00	0.028	1.52	53.98	155.32	7.11	3.18	4.76	4.76	6.35	154.05	146.35

*For illustration of letter dimensions see Figure 2-1.

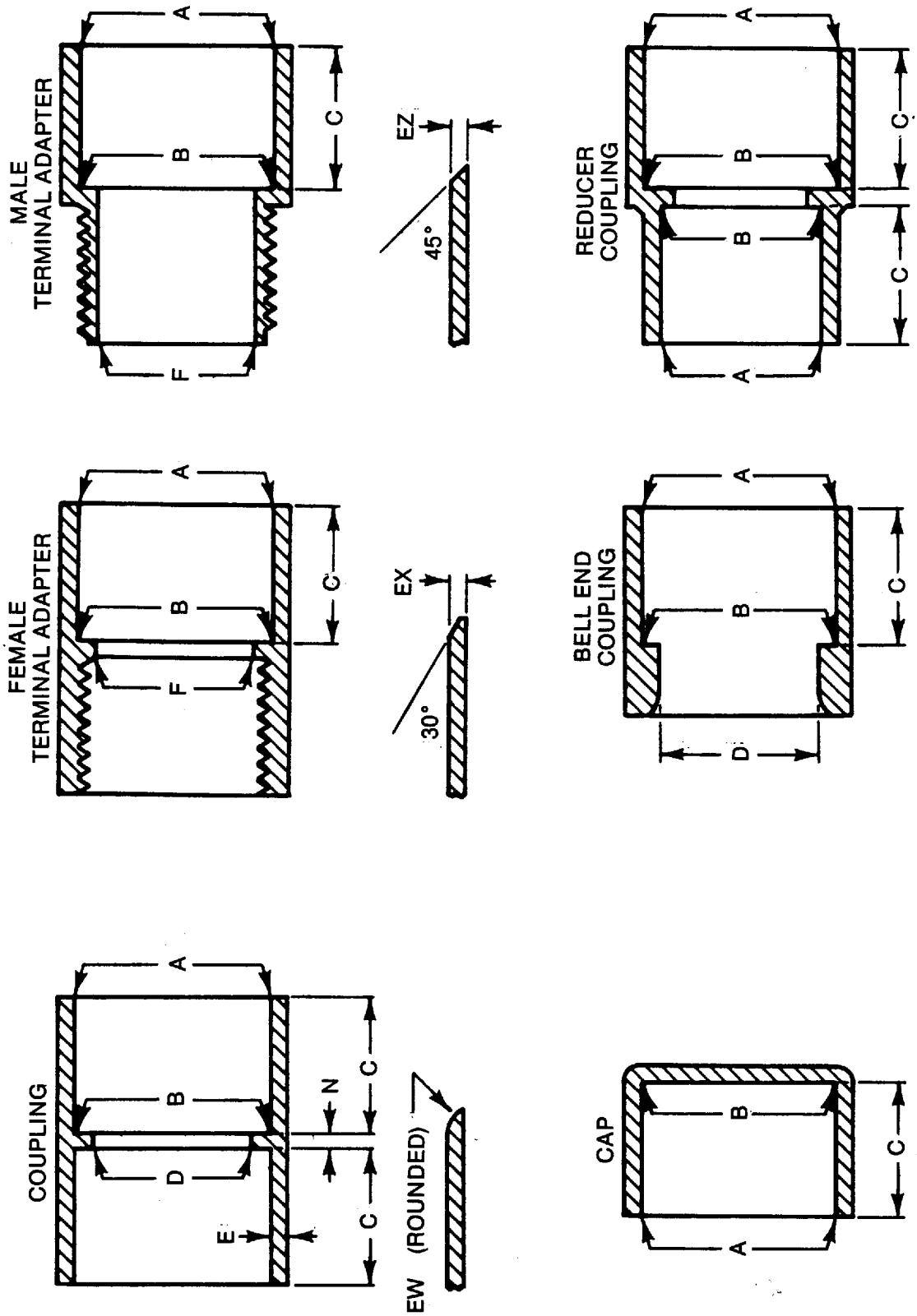

Figure 2-1
COUPLINGS AND ADAPTERS

Copyright National Electrical Manufacturers Association
Provided by IHS under license with NEMA
No reproduction or networking permitted without license from IHS
Not for Resale

Table 2-2
EXTERNAL AND INTERNAL TAPER THREADS

Nominal Size of Fitting, Inches	Threads per Inch	External Threads			Internal Threads	
		Pitch Diameter*, Inches, at End of Fitting	Length of Thread, Inches		American National Pipe Taper (NPT) Thread Gage† Will Enter	
		Taper, ¾ Inch per Foot	Effective L_2	Overall L_4*	Maximum Turns	Minimum Turns
(1)	(2)	(3)	(4)	(5)	(6)	(7)
½	14	0.7584	0.53	0.78	9	6
¾	14	0.9677	0.55	0.79	9	6
1	11 ½	1.2136	0.68	0.98	9	6
1¼	11 ½	1.5571	0.71	1.01	10	6
1½	11 ½	1.7961	0.72	1.03	10	6
2	11 ½	2.2690	0.76	1.06	10	6
2½	8	2.7195	1.14	1.57	10	6
3	8	3.3406	1.20	1.63	10	6
3½	8	3.8375	1.25	1.68	11	7
4	8	4.3344	1.30	1.73	11	7
5	8	5.3907	1.41	1.84	11	7
6	8	6.4461	1.51	1.95	11	7

*The applicable tolerances are:
Thread Length (L_4): ± one thread.
Pitch Diameter: ± one turn is the maximum variation permitted from gaging face of the working thread gages. This is equivalent to ±1½ turns from basic dimensions since a variation of ±½ turn from basic dimensions is permitted in working gages. The above pitch diameter for external threads with a taper of ¾ inch per foot is identical with the specifications in ANSI/ASME B 1.20.1 and the NBS (National Bureau of Standards) Handbook H28.

†See ANSI B 2.1.

NOTE 1—At least five full threads shall be provided unless otherwise specified.

NOTE 2—Metric conversion units are not applicable to these American National Thread dimensions.

Table 2-3
EXTERNAL AND INTERNAL STRAIGHT THREADS

Nominal Size of Fitting, Inches	Threads per Inch	External Threads—Pitch Diameter, Inches		Internal Threads—Pitch Diameter, Inches, of Straight Internal Threads for			
				Bushings and Other Fittings		Locknuts	
		Maximum	Minimum	Minimum	Maximum	Minimum	Maximum
(1)	(2)	(3)	(4)	(5)	(6)	(7)	(8)
½	14	0.776	0.770	0.781	0.788	0.801	0.808
¾	14	0.987	0.981	0.992	0.999	1.011	1.018
1	11 ½	1.236	1.228	1.244	1.252	1.266	1.274
1¼	11 ½	1.581	1.573	1.588	1.596	1.611	1.619
1½	11 ½	1.820	1.812	1.827	1.835	1.850	1.858
2	11 ½	2.294	2.286	2.301	2.309	2.323	2.332
2½	8	2.758	2.748	2.769	2.781	2.801	2.813
3	8	3.385	3.375	3.396	3.408	3.428	3.439
3½	8	3.885	3.875	3.896	3.908	3.928	3.940
4	8	4.383	4.373	4.394	4.406	4.426	4.438
5	8	5.445	5.435	5.456	5.468	5.488	5.500
6	8	6.502	6.492	6.513	6.525	6.545	6.557

NOTE 1—All dimensions are rounded off to the nearest third place decimal.

NOTE 2—Metric conversion units are not applicable to these American National Thread dimensions.

Copyright National Electrical Manufacturers Association
Provided by IHS under license with NEMA
No reproduction or networking permitted without license from IHS
Not for Resale

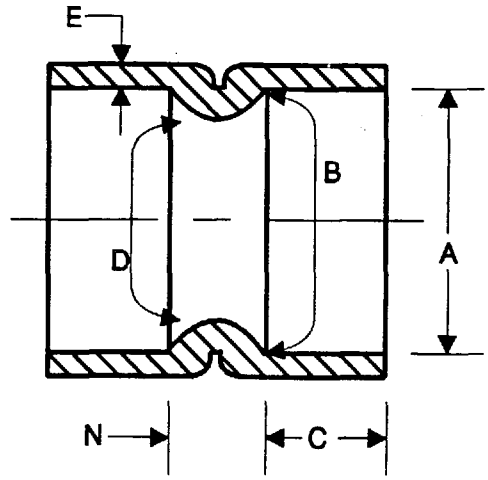

TAPERED SOCKETS FOR PVC COUPLINGS, SCHEDULE 40

Table 2-4
DIMENSIONS FOR COMPRESSION-FORMED PVC SCHEDULE 40 COUPLINGS

Nominal Size of Fittings, Inches	Socket Diameters						C		D	E	N
	A			B			Socket Depth		Throat Diameter Minimum	Wall Thickness Minimum	Minimum
	At Entrance			At Bottom			Minimum	Maximum			
	Maximum	Minimum	Average	Maximum	Minimum	Average					
Inches											
½	0.860	0.844	0.852±0.004	0.844	0.828	0.836±0.004	0.652	1.500	0.630	0.095	3/32
¾	1.074	1.054	1.064±0.004	1.056	1.036	1.046±0.004	0.719	1.500	0.834	0.095	3/32
1	1.340	1.320	1.330±0.005	1.320	1.300	1.310±0.005	0.875	1.875	1.059	0.100	3/32
1¼	1.689	1.665	1.677±0.005	1.667	1.643	1.655±0.005	0.938	2.000	1.392	0.120	3/32
1½	1.930	1.906	1.918±0.006	1.906	1.882	1.894±0.006	1.062	2.000	1.622	0.120	3/32
2	2.405	2.381	2.393±0.006	2.381	2.357	2.369±0.006	1.125	2.000	2.079	0.130	3/32
2½	2.905	2.875	2.890±0.007	2.883	2.853	2.868±0.007	1.469	3.000	2.484	0.165	3/16
3	3.530	3.500	3.515±0.008	3.507	3.477	3.492±0.008	1.594	3.125	3.083	0.179	3/16
3½	4.065	3.965	4.015±0.008	4.007	3.977	3.992±0.008	1.687	3.250	3.598	0.188	3/16
4	4.565	4.465	4.515±0.009	4.506	4.476	4.491±0.009	1.750	3.375	4.076	0.197	3/16
5	5.643	5.543	5.593±0.010	5.583	5.523	5.553±0.010	1.937	3.625	5.097	0.214	3/16
6	6.708	6.608	6.658±0.011	6.644	6.584	6.614±0.011	2.125	3.750	6.115	0.232	¼
Millimeters											
½	21.44	21.84	21.64±0.10	21.03	21.44	21.23±0.10	38.10	16.56	16.00	2.41	2.38
¾	26.77	27.28	27.03±0.10	26.31	26.82	26.57±0.10	38.10	18.26	21.18	2.41	2.38
1	33.53	34.04	33.78±0.13	33.02	33.53	33.27±0.13	47.63	22.23	26.90	2.54	2.38
1¼	42.29	42.90	42.60±0.13	41.73	42.34	42.04±0.13	50.80	23.83	35.36	3.05	2.38
1½	48.41	49.02	48.72±0.15	47.80	48.41	48.11±0.15	50.80	26.97	41.20	3.05	2.38
2	60.48	61.09	60.78±0.15	59.87	60.48	60.17±0.15	50.80	28.58	52.81	3.30	2.38
2½	73.03	73.79	73.41±0.18	72.47	73.23	72.85±0.18	76.20	37.31	63.09	4.19	4.76
3	88.90	89.66	89.28±0.20	88.32	89.08	88.70±0.20	79.38	40.49	78.31	4.55	4.76
3½	100.71	103.25	101.98±0.20	100.20	101.78	101.40±0.20	82.55	42.85	91.39	4.78	4.76
4	113.41	115.95	114.68±0.23	112.90	114.45	114.07±0.23	85.73	44.45	103.53	5.00	4.76
5	140.79	143.33	142.06±0.25	140.28	141.81	141.05±0.25	92.08	49.20	129.46	5.44	4.76
6	167.84	170.38	169.11±0.28	167.23	168.76	168.00±0.28	95.25	53.98	159.32	5.89	6.35

Copyright National Electrical Manufacturers Association
Provided by IHS under license with NEMA
No reproduction or networking permitted without license from IHS
Not for Resale

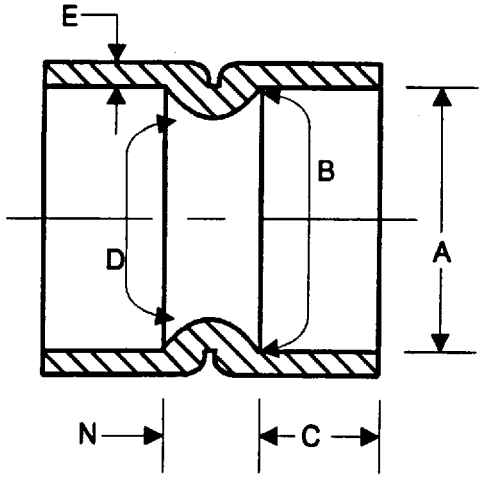

TAPERED SOCKETS FOR PVC COUPLINGS, SCHEDULE 80

Table 2-5
DIMENSIONS FOR COMPRESSION-FORMED PVC SCHEDULE 80 COUPLINGS

Nominal Size of Fittings, Inches	Socket Diameters						C		D	E	N
	A			B			Socket Depth		Throat Diameter Minimum	Wall Thickness Minimum	Minimum
	At Entrance			At Bottom			Minimum	Maximum			
	Maximum	Minimum	Average	Maximum	Minimum	Average					
Inches											
½	0.860	0.844	0.852±0.004	0.844	0.828	0.836±0.004	0.652	1.500	0.630	0.129	3/32
¾	1.074	1.054	1.064±0.004	1.056	1.036	1.046±0.004	0.719	1.500	0.834	0.136	3/32
1	1.340	1.320	1.330±0.005	1.320	1.300	1.310±0.005	0.875	1.875	1.059	0.158	3/32
1¼	1.689	1.665	1.677±0.005	1.667	1.643	1.655±0.005	0.938	2.000	1.392	0.168	3/32
1½	1.930	1.906	1.918±0.006	1.906	1.882	1.894±0.006	1.062	2.000	1.622	0.176	3/32
2	2.405	2.381	2.393±0.006	2.381	2.357	2.369±0.006	1.125	2.000	2.079	0.181	3/32
2½	2.905	2.875	2.890±0.007	2.883	2.853	2.868±0.007	1.469	3.000	2.484	0.229	3/16
3	3.530	3.500	3.515±0.008	3.507	3.477	3.492±0.008	1.594	3.125	3.083	0.249	3/16
3½	4.065	3.965	4.015±0.008	4.007	3.977	3.992±0.008	1.687	3.250	3.598	0.264	3/16
4	4.565	4.465	4.515±0.009	4.506	4.476	4.491±0.009	1.750	3.375	4.076	0.280	3/16
5	5.643	5.543	5.593±0.010	5.583	5.523	5.553±0.010	1.937	3.625	5.097	0.311	3/16
6	6.708	6.608	6.658±0.011	6.644	6.584	6.614±0.011	2.125	3.750	6.115	0.359	¼
Millimeters											
½	21.44	21.84	21.64±0.10	21.03	21.44	21.23±0.10	38.10	16.56	16.00	3.28	2.38
¾	26.77	27.28	27.03±0.10	26.31	26.82	26.57±0.10	38.10	18.26	21.18	3.45	2.38
1	33.53	34.04	33.78±0.13	33.02	33.53	33.27±0.13	47.63	22.23	26.90	4.01	2.38
1¼	42.29	42.90	42.60±0.13	41.73	42.34	42.04±0.13	50.80	23.83	35.36	4.27	2.38
1½	48.41	49.02	48.72±0.15	47.80	48.41	48.11±0.15	50.80	26.97	41.20	4.47	2.38
2	60.48	61.09	60.78±0.15	59.87	60.48	60.17±0.15	50.80	28.58	52.81	4.60	2.38
2½	73.03	73.79	73.41±0.18	72.47	73.23	72.85±0.18	76.20	37.31	63.09	5.82	4.76
3	88.90	89.66	89.28±0.20	88.32	89.08	88.70±0.20	79.38	40.49	78.31	6.32	4.76
3½	100.71	103.25	101.98±0.20	100.20	101.78	101.40±0.20	82.55	42.85	91.39	6.71	4.76
4	113.41	115.95	114.68±0.23	112.90	114.45	114.07±0.23	85.73	44.45	103.53	7.11	4.76
5	140.79	143.33	142.06±0.25	140.28	141.81	141.05±0.25	92.08	49.20	129.46	7.90	4.76
6	167.84	170.38	169.11±0.28	167.23	168.76	168.00±0.28	95.25	53.98	159.32	9.12	6.35

Copyright National Electrical Manufacturers Association
Provided by IHS under license with NEMA
No reproduction or networking permitted without license from IHS
Not for Resale

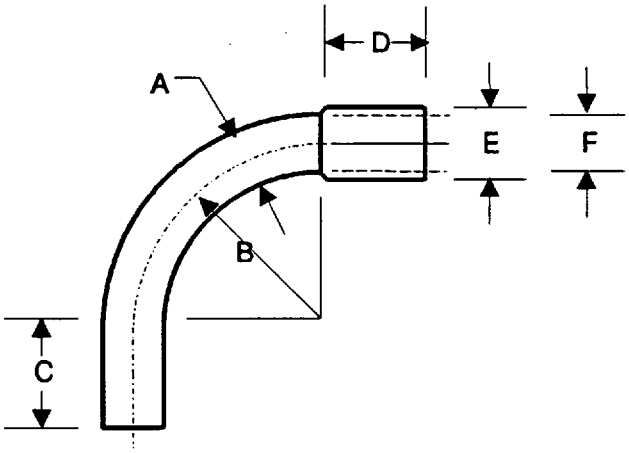

Table 2-6
DIMENSIONS FOR EXPANDED-END PVC SCHEDULE 40 AND SCHEDULE 80 ELBOWS*

A	B	C	Socket Dimensions							
Nominal Size	Minimum Radius	Minimum Tangent	D		E			F		
			Socket Depth		At Entrance			At Bottom		
			Maximum	Minimum	Average	Minimum	Maximum	Average	Minimum	Maximum
Dimensions in Inches of Integral Couplings										
½	4.00	1.500	1.500	0.652	0.852±0.004	0.844	0.860	0.836±0.004	0.828	0.844
¾	4.50	1.500	1.500	0.719	1.064±0.004	1.054	1.074	1.046±0.004	1.036	1.056
1	5.75	1.875	1.875	0.875	1.330±0.005	1.320	1.340	1.310±0.005	1.300	1.320
1¼	7.25	2.000	2.000	0.938	1.677±0.005	1.665	1.689	1.655±0.005	1.643	1.667
1½	8.25	2.000	2.000	1.062	1.918±0.006	1.906	1.930	1.894±0.006	1.882	1.906
2	9.50	2.000	2.000	1.125	2.393±0.006	2.381	2.405	2.369±0.006	2.357	2.381
2½	10.50	3.000	3.000	1.469	2.890±0.007	2.875	2.905	2.868±0.007	2.853	2.883
3	13.00	3.125	3.125	1.594	3.515±0.008	3.500	3.530	3.492±0.008	3.477	3.507
3½	15.00	3.250	3.250	1.687	4.015±0.008	3.965	4.065	3.976±0.008	3.945	4.007
4	16.00	3.375	3.375	1.750	4.515±0.009	4.465	4.565	4.476±0.009	4.445	4.506
5	24.00	3.625	3.625	1.937	5.593±0.010	5.543	5.643	5.553±0.010	5.523	5.583
6	30.00	3.750	3.750	2.125	6.658±0.011	6.608	6.708	6.614±0.011	6.584	6.644
Dimensions in Millimeters of Integral Couplings										
½	101.60	38.10	38.10	16.56	21.64±0.10	21.44	21.84	21.23±0.10	21.03	21.44
¾	114.30	38.10	38.10	18.26	27.03±0.10	26.77	27.28	26.57±0.10	26.31	26.82
1	146.05	47.63	47.63	22.23	33.78±0.13	33.53	34.04	33.27±0.13	33.02	33.53
1¼	184.15	50.80	50.80	23.83	42.60±0.13	42.29	42.90	42.04±0.13	41.73	42.34
1½	209.55	50.80	50.80	26.97	48.72±0.15	48.41	49.02	48.11±0.15	47.80	48.41
2	241.30	50.80	50.80	28.58	60.78±0.15	60.48	61.09	60.17±0.15	59.87	60.48
2½	266.70	76.20	76.20	37.31	73.41±0.18	73.03	73.79	72.85±0.18	72.47	73.23
3	330.20	79.38	79.38	40.49	89.28±0.20	88.90	89.66	88.70±0.20	88.32	89.08
3½	381.00	82.55	82.55	42.85	101.98±0.20	100.71	103.25	101.40±0.20	100.20	101.78
4	406.40	85.73	85.73	44.45	114.68±0.23	113.41	115.95	114.07±0.23	112.90	114.45
5	609.60	92.08	92.08	49.20	142.06±0.25	140.79	143.33	141.05±0.25	140.28	141.81
6	762.00	95.25	95.25	53.98	169.11±0.28	167.84	170.38	168.00±0.28	167.23	168.76

*Dimensions "B" and "C" also apply for plain-end, one-end expanded, 90-degree, 45-degree, and two-ends expanded elbows.

Copyright National Electrical Manufacturers Association
Provided by IHS under license with NEMA
No reproduction or networking permitted without license from IHS
Not for Resale

Table 2-7
ID AND OD TOLERANCES FOR SCHEDULE 40 AND SCHEDULE 80 ELBOWS*

Conduit Size, Inches	Inches		Millimeters	
Schedule 40:	**ID Deformation Minimum Allowable ID**	**OD Deformation Maximum Allowable OD**	**ID Deformation Minimum Allowable ID**	**OD Deformation Maximum Allowable OD**
½	0.476	0.924	12.09	23.47
¾	0.709	1.155	18.01	29.35
1	0.909	1.447	23.09	36.75
1¼	1.189	1.760	30.20	44.70
1½	1.470	2.090	37.34	53.09
2	1.900	2.613	48.26	66.37
2½	2.296	3.163	58.32	80.34
3	2.850	3.850	72.39	97.79
3½	3.325	4.400	84.46	111.76
4	3.800	4.950	96.52	125.73
5	4.750	6.119	120.65	155.42
6	5.700	7.288	144.78	185.12
Schedule 80:	**ID Deformation Minimum Allowable ID**	**OD Deformation Maximum Allowable OD**	**ID Deformation Minimum Allowable ID**	**OD Deformation Maximum Allowable OD**
½	0.475	0.924	12.07	23.47
¾	0.682	1.155	17.32	29.35
1	0.905	1.447	22.99	36.75
1¼	1.214	1.760	30.84	44.70
1½	1.425	2.090	36.19	53.09
2	1.642	2.613	41.71	66.37
2½	2.007	3.163	50.98	80.34
3	2.755	3.850	69.98	97.79
3½	3.228	4.400	81.99	111.76
4	3.635	4.950	92.33	125.73
5	4.572	6.119	116.13	155.42
6	5.473	7.288	139.01	185.12

*The applicable bend tolerances for both Schedule 40 and 80 Elbows are:
Degree of bend: ±2 degrees
Radius of bend: +2 inches (+50.8 mm)
– 0 inches (– 0 mm)

Copyright National Electrical Manufacturers Association
Provided by IHS under license with NEMA
No reproduction or networking permitted without license from IHS
Not for Resale

Section 3
PERFORMANCE REQUIREMENTS

3.1 MATERIAL

Material strength, heat resistance, flammability, and chemical resistance shall meet the requirements of ASTM D 1784.

NEMA Standard 1-26-1967.

3.2 BENDING

A PVC conduit coupling, or reducer, or an assembled male-female terminal adapter combination shall not be damaged or separated from the conduit when tested in accordance with 4.4.

NEMA Standard 1-26-1967.

3.3 AXIAL PULL TEST ON JOINTS

Each method of joining lengths of electrical plastic conduit-PVC and electrical plastic tubing-PVC to the appropriate fittings shall result in a connection that is not damaged or separated by the test described in 4.5. If failure of the fitting or conduit occurs prior to failure at the joint, the performance of the joint shall be considered to meet the requirements of this standard.

NEMA Standard 1-26-1967.

3.4 WORKMANSHIP

Fittings shall be homogenous throughout and free from visible cracks, holes, foreign inclusions, or other injurious defects.

NEMA Standard 1-26-1967.

3.5 LOW TEMPERATURE HANDLING

Fittings shall not shatter, chip, or crack when tested in accordance with 4.7.

NEMA Standard 1-27-1982.

Copyright National Electrical Manufacturers Association
Provided by IHS under license with NEMA
No reproduction or networking permitted without license from IHS
Not for Resale

Section 4
TEST METHODS

4.1 CONDITIONING, TEST CONDITIONS, AND SAMPLING

4.1.1 Conditioning Test Specimens

When conditioning is required, the test specimens shall be conditioned in accordance with Procedure A in ASTM D 618 at 73.4±3.6°F (23±2°C) and 50±2 percent relative humidity for not less than 48 hours prior to test.

4.1.2 Test Conditions

Tests shall be conducted at 73.4±3.6°F (23±2°C) and 50±2 percent relative humidity unless otherwise specified.

4.1.3 Sampling

Samples shall be selected at random.

NEMA Standard 7-12-1978.

4.2 DIMENSIONS

External dimensions shall be measured with micrometers or vernier calipers accurate to at least ±0.001 inch (±0.02 mm). Internal dimensions shall be measured with internal micrometers or telescoping gages accurate to at least ±0.001 inch (±0.02 mm). Lengths shall be measured with a good quality commercial scale calibrated in 1/32-inch (1 mm) increments.

Average diameters (outside diameters, inside diameters, and socket diameters) shall be determined by obtaining the minimum diameter and the maximum diameter by actual measurements and averaging them using the formula:

Average diameter = ½ (maximum diameter + minimum diameter)

The maximum total out-of-roundness tolerances given for socket diameters in Table 2-1 apply to the average diameter of the socket as determined in accordance with the preceding paragraph. For example, if the average diameter of 1-inch (nominal size) fittings is 1.326 inch (33.68 mm), then the measured diameters of the socket due to ovality can be 1.336 inch (33.93 mm) maximum and 1.316 inch (33.43 mm) minimum.

NEMA Standard 7-12-1978.

4.3 THREADS

Threads shall be measured in accordance with the following methods of gaging, using gages having the dimensions given in ANSI/ASME B 1.20.1.

4.3.1 Gaging External Taper Threads

The ring gage shall be screwed up tight by hand on the external thread. The thread is within the permissible tolerance when the gaging face of the working ring gage is not more than 1½ turns, large or small, from being flush with the face of the fitting, after correction has been made for any variation in the gage from basic dimensions.

4.3.2 Gaging Internal Taper Threads

The plug gage shall be screwed up tight by hand into the fitting. The thread is within the permissible tolerance when the gaging notch of the working plug gage is not more than 1½ turns, large or small, from being flush with the end of the thread, after correction has been made for any variation in the gage from basic dimensions.

4.3.3 Gaging Chamfered, Countersunk, or Recessed Threads

When the internal thread is chamfered, countersunk, or recessed, the notch shall be flush with the bottom of the chamfer, which shall be considered as being the intersection of the chamfer cone and the pitch cone of the thread.

NOTE—Usually this depth is equal to ½ thread from the face of the fitting. (This note has been approved as Authorized Engineering Information.)

4.3.4 Gaging of Straight Threads

Types of Gages—Gages to properly control the production of straight threads shall be either straight "GO" or "NO GO" gages or taper plug gages (see ANSI/ASME B 1.20.1)

Gage Dimensions—The straight "GO" and "NO GO" plug and ring gages used for checking mechanical joint threads (see Tables 6 and 7 in ANSI B 2.1) shall be made to the pitch diameter limits specified in those tables in accordance with standard practice for straight thread gages.

Use of Straight and Taper Gages—Straight "GO" and "NO GO" gages shall be used for all types of threaded joints where both the external and internal threads are straight. Taper plug gages shall be used for the internal threads of all types of mechanical joints where the external thread is tapered and the internal thread is straight.

NEMA Standard 1-26-1967.

Copyright National Electrical Manufacturers Association
Provided by IHS under license with NEMA
No reproduction or networking permitted without license from IHS
Not for Resale

Table 4-1
BENDING LOAD

Nominal Size of Fitting, Inches	Bending Load, Pounds (kg)
½	20 (9)
¾	35 (16)
1	50 (23)
1¼	75 (34)
1½	85 (39)
2	110 (50)
2½	110 (50)
3	110 (50)
3½	110 (50)
4	110 (50)
5	...
6	...

NEMA Standard 7-12-1978.

4.4 BENDING

Samples of PVC conduit fittings shall be solvent cemented to 18-inch (457 mm) lengths of electrical plastic conduit-PVC and shall be tested no sooner than 24 hours after assembly.

For testing and coupling, the assembly, with the coupling at the center, shall be placed on supports that are 30 inches (762 mm) apart as illustrated in Figure 4-1. The load indicated in Table 4-1 shall be suspended from the center of the coupling for 60 seconds, during which time the entire assembly shall be rotated through one complete revolution about its major axis.

NEMA Standard 7-12-1978.

4.5 AXIAL PULL TEST ON JOINTS

Two 18-inch (457 mm) lengths of each size of electrical plastic conduit-PVC shall be joined by each of the methods recommended by the manufacturer. Each assembly shall be tested separately with cylindrical plugs inserted in its ends to prevent collapse of the conduit. Each plug shall fit snugly for its entire length. Each assembly shall be secured in the jaws of a power-driven testing machine on which the grips, when loaded, separate at a rate of ½-inch (13 mm) per minute. The load applied to the assembly by the machine shall be increased to the level indicated in Table 4-2 and then held for 1 minute.

NEMA Standard 7-12-1978.

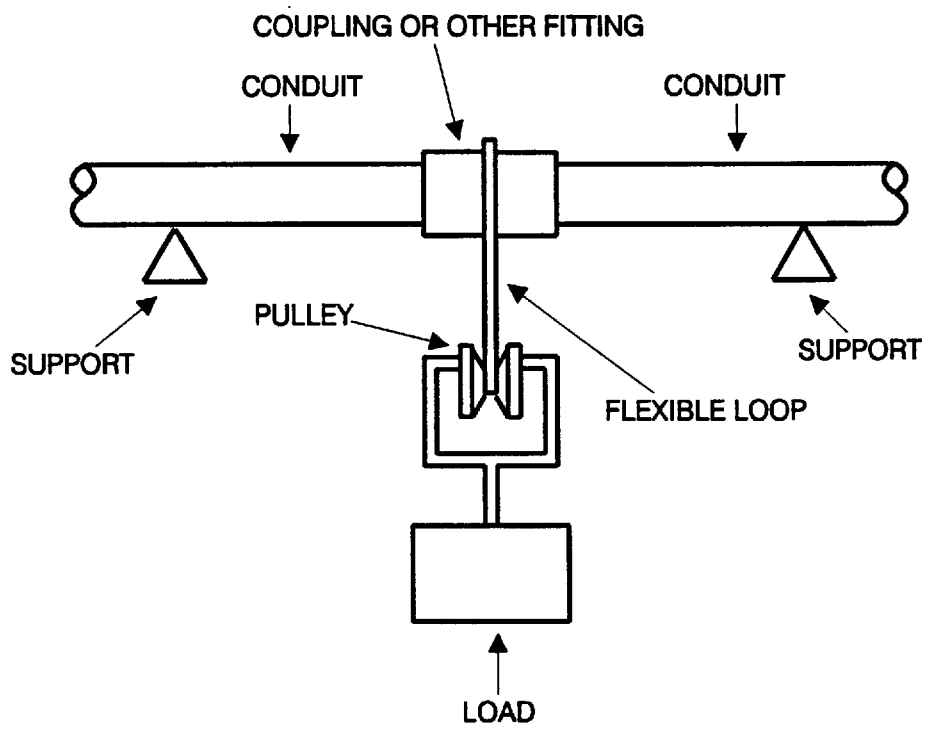

Figure 4-1
BENDING TEST ARRANGEMENT

Copyright National Electrical Manufacturers Association
Provided by IHS under license with NEMA
No reproduction or networking permitted without license from IHS
Not for Resale

Table 4-2
AXIAL LOAD FOR PULL TEST ON JOINTS

Nominal Size of Fitting, Inches	Axial Load, Pounds (kg)
½	300 (136)
¾	450 (204)
1	600 (272)
1¼	700 (318)
1½	800 (363)
2	1000 (454)
2½	1000 (454)
3	1000 (454)
3½	1000 (454)
4	1000 (454)
5	...
6	...

4.6 LOW TEMPERATURE HANDLING TEST

Three specimens of each fitting shall be conditioned in circulating air at a temperature of –4±3.6°F (–20±2°C) for 5 hours. The specimens shall be removed from the cold chamber and each of them shall be dropped twice, in quick succession, from a height of 5 feet (1.5 m) onto a concrete floor. During the first drop, the specimen shall make an angle of approximately 45 degrees with the floor so that one end of it reaches the floor first. During the second drop, the specimen shall fall parallel to the floor.

NEMA Standard 1-27-1982.

4.7 RETESTS

In case of failure under any of the foregoing tests, the test or tests under which the fitting failed shall be repeated twice, and the fitting shall be regarded as conforming to these standards if the results of the two additional tests are satisfactory. The fitting shall be regarded as not conforming to these standards if the results of either of the two additional tests are unsatisfactory.

NEMA Standard 1-26-1967.

Copyright National Electrical Manufacturers Association
Provided by IHS under license with NEMA
No reproduction or networking permitted without license from IHS
Not for Resale

Section 5
MARKINGS

5.1 MARKINGS

Fittings shall be marked with the following:

1. Manufacturer's name or trademark;
2. Material designation;
3. Size; and
4. Catalog number or equivalent, where practicable.

Where the size of the fitting does not permit complete marking, markings shall be permitted to be omitted in the following sequence: catalog number, size, and material designation.

Markings shall be molded, hot stamped, or applied to fittings by any other suitable method, such as printing.

Where markings are recessed, they shall not cause cracks or reduce the wall thickness below the minimum specified in Table 2-1.

NEMA Standard 9-5-1990.

Copyright National Electrical Manufacturers Association
Provided by IHS under license with NEMA
No reproduction or networking permitted without license from IHS

Not for Resale

NEMA STANDARDIZATION

The purpose of NEMA Standards, their classification and status, are set forth in certain clauses of the NEMA *Standardization Policies and Procedures* manual and are referenced below.

Purpose of Standards

National Electrical Manufacturers Association standards are adopted in the public interest and are designed to eliminate misunderstandings between the manufacturer and the purchaser and to assist purchasers in selecting and obtaining the proper product for their particular needs. Existence of a National Electrical Manufacturers Association standard does not in any respect preclude any member or nonmember from manufacturing or selling products not conforming to the standard. *(Standardization Policies and Procedures, p. 1)*

Definition of a Standard

A standard of the National Electrical Manufacturers Association defines a product, process, or procedure with reference to one or more of the following: nomenclature, composition, construction, dimensions, tolerances, safety, operating characteristics, performance, rating, testing, and the service for which they are designed.

(Standardization Policies and Procedures, p. 2)

Dimensions

Where dimensions are given for interchangeability purposes, alternate dimensions satisfying the other provisions of the Standards Publication may be capable of otherwise equivalent performance.

(Standardization Policies and Procedures, p.8)

Categories of Standards

National Electrical Manufacturers Association Standards are of three classes:

1. NEMA Standard, which relates to a product, process, or procedure commercially standardized and subject to repetitive manufacture, which standard has been approved by at least 90 percent of the members of the Subdivision eligible to vote thereon;
2. Suggested Standard for Future Design, which may not have been regularly applied to a commercial product, but which suggests a sound engineering approach to future development, which standard has been approved by at least two-thirds of the members of the Subdivision eligible to vote thereon.
3. Adoptive Standard, which is adopted in whole or in part from the standards of another organization, either domestic, regional, or international.

(Standardization Policies and Procedures, pp. 7 & 16)

Authorized Engineering Information

Authorized Engineering Information consists of explanatory data and other engineering information of an informative character not falling within the classification of NEMA Standard or Suggested Standard for Future Design, which standard has been approved by at least two-thirds of the members of the Subdivision eligible to vote on the standard.

(Standardization Policies and Procedures, pp. 7 & 16)

Official Standards Proposal

An Official Standards Proposal is an official draft of a proposed standard which is formally recommended to an outside organization(s) for consideration, comment, and/or approval, and which has been approved by at least 90 percent of the members of the Subdivision eligible to vote thereon.

(Standardization Policies and Procedures, pp. 7 & 16)

Identification of Status

Standards in NEMA Standards Publications are identified in the foreword or following each standard as "NEMA Standard" or "Suggested Standard for Future Design." These indicate the status of the standard. These words are followed by a date which indicates when the standard was adopted in its present form by the Association.

The material identified as "Authorized Engineering Information" and "Official Standards Proposal" is designated similarly.

Copyright National Electrical Manufacturers Association
Provided by IHS under license with NEMA
No reproduction or networking permitted without license from IHS
Not for Resale

PLASTIC CONDUIT, DUCT AND ACCESSORIES SECTION OF THE NATIONAL ELECTRICAL MANUFACTURERS ASSOCIATION

MEMBER COMPANIES

Aeroquip Corp./Underground Products
Nashville, TN 37210

Arnco Corporation
Elyria, OH 44035

Can-Tex Industries
Mineral Wells, TX 76067

Carlon
Division of Lamson & Sessions
Cleveland, OH 44122

Certainteed Corporation
Valley Forge, PA 19482

Champion Fiberglass
Spring, TX 77383

Fiberglass Pipe & Conduit Company
Ocean, NJ 07712

Formex Manufacturing, Inc.
Atlanta, GA 30362

FRE Composites, Inc.
Lakewood, NJ 08701

Heyco Molded Products
Kenilworth, NJ 07033

Hubbell Incorporated
Kellems Division
Stonington, CT 06378

J-M Manufacturing Co., Inc.
Stockton, CA 95206

LCP, Inc.
Edison, NJ 08854

Midwest Plastic Fabricators, Inc.
Chagrin Falls, OH 44022

Pacific Western Extruded Plastics
Eugene, OR 97401

Queen City Plastics, Inc.
Charlotte, NC 28241

R&G Sloane Manufacturing, Co., Inc.
Sun Valley, CA 91352

Sedco Pipe Products
Auburndale, FL 33823

Smith Fiberglass Products Company
Wichita, KS 67217

Spiraduct Inc.
Doylestown, PA 18901

Thomas & Betts Corporation
Bridgewater, NJ 08807-0993

Underground Devices, Inc.
Glenview, IL 60025

United Fiberglass of America, Inc.
Springfield, OH 45501

Copyright National Electrical Manufacturers Association
Provided by IHS under license with NEMA
No reproduction or networking permitted without license from IHS
Not for Resale