STD-NEMA TC 19-ENGL 1997 ■ 6470247 0513120 27T ■

NEMA STANDARDS PUBLICATION

NEMA TC 19

NONMETALLIC RISER U-TYPE GUARDS

NATIONAL ELECTRICAL MANUFACTURERS ASSOCIATION

Copyright National Electrical Manufacturers Association
Provided by IHS under license with NEMA
No reproduction or networking permitted without license from IHS
Not for Resale

NEMA Standards Publication TC 19-1997

NONMETALLIC RISER U-TYPE GUARDS

Published by

National Electrical Manufacturers Association
1300 North 17th Street, Suite 1847
Rosslyn, VA 22209

© Copyright 1997 by the National Electrical Manufacturers Association. All rights including translation into other languages, reserved under the Universal Copyright Convention, the Berne Convention for the Protection of Literary and Artistic Works, and the International and Pan American Copyright Conventions.

Copyright National Electrical Manufacturers Association
Provided by IHS under license with NEMA
No reproduction or networking permitted without license from IHS

Not for Resale

TABLE OF CONTENTS

Foreword ii

Section 1 General 1
1.1 Scope 1
1.2 Referenced standards 1

Section 2 Definitions and Abbreviations 3

Section 3 General Requirements 5
3.1 Materials 5
3.2 Dimensions and lengths 5
3.3 Belled end 5
3.4 Ribbed surfaces 5
3.5 Workmanship 5
3.6 Inspections 5
3.7 Flammability 5

Section 4 Performance Requirements 9
4.1 Qualification test 9
4.2 Quality control tests 9

Section 5 Test Methods 11
5.1 Conditioning, test conditions, and sampling 11
5.2 Dimensions 11
5.3 Impact resistance 11
5.4 Sunlight resistance test 11

Section 6 Marking 15
6.1 Marking 15

Section 7 Installation 17
7.1 Installation procedures 17

Copyright National Electrical Manufacturers Association
Provided by IHS under license with NEMA
No reproduction or networking permitted without license from IHS

Not for Resale

FOREWORD

This standard for PVC (polyvinyl chloride) and PE (polyethylene) nonmetallic riser U-type guards for use in protecting riser cables in utility poles is intended to:

a. list dimensions and other significant requirements
b. set forth some of the properties of these products
c. assist in selecting and obtaining the proper product for a particular need.

User needs have been considered through the development of this standard.

The Polymer Raceway Products Section of NEMA, through its members, has worked (and continues to work) closely with such organizations as ASTM, the Plastic Pipe Institute, appropriate government agencies, testing laboratories and others in the periodic review and revision of this standard for any changes necessary to remain current. Proposed or recommended revisions should be submitted to:

Vice President, Engineering Department
National Electrical Manufacturers Association
1300 North 17th Street, Suite 1847
Rosslyn, VA 22209

This Standards Publication was developed by the Polymer Raceway Products Section. Section approval of the standard does not necessarily imply that all section members voted for its approval or participated in its development. At the time it was approved, the Polymer Raceway Products Section was composed of the following members:

AFC Cable Systems—New Bedford, MA
ARNCO Corporation—Elyria, OH
CANTEX, INC.—Mineral Wells, TX
Champion Fiberglass, Inc.—Spring, TX
Custom Plastics, Inc.—Elk Grove Village, IL
Electrical Materials Company—Genoa City, WI
Enduro Composite Systems, Inc.—Houston, TX
ERICO, Inc.—Solon, OH
FRE Composites Corporation—St. Andrews, East, Quebec
Heyco Products, Inc.—Kenilworth, NJ
Hubbell Incorporated/Kellems Division—Bridgeport, CT
Integral Corporation—Dallas, TX
J-M Manufacturing Company, Inc.—Stockton, CA
Lamson & Sessions—Cleveland, OH
Pacific Western Extruded Plastics—Eugene, OR
Panduit Corporation—Lockport, IL
Petroflex, N.A.—Gainesville, TX
Plexco—Bensonville, IL
Queen City Plastics, Inc.—Charlotte, NC
Smith Fiberglass Products, Inc.—Wichita, KS
Thomas & Betts Corporation—Memphis, TN
Underground Devices, Inc.—Northbrook, IL
United Fiberglass of America, Inc.—Springfield, OH
The Wiremold Company—West Hartford, CT

Copyright National Electrical Manufacturers Association
Provided by IHS under license with NEMA
No reproduction or networking permitted without license from IHS
Not for Resale

Section 1
GENERAL

1.1 SCOPE

This standard covers PVC and PE nonmetallic riser U-type guards intended for use to protect riser cables on utility poles.

1.2 REFERENCED STANDARDS

In this publication, reference is made to the standards listed below. Copies are available from the indicated sources.

American Society for Testing and Materials
100 Barr Harbor Drive
West Conshohocken, PA 19428

D 3350	*Standard Specification for Polyethylene Plastic Pipe and Fittings Materials*
D 618	*Conditioning Plastics and Electrical Insulating Materials for Testing, Standard Methods of*
D 883	*Plastics, Definitions of Terms Relating to*
D 1600-95C	*Plastics, Standard Abbreviations of Terms Relating to*
D 2444	*Test Method for Impact Resistance for Pipe and Fittings by Means of a Tup (Falling Weight)*
F 412-94B	*Standard Definitions of Terms Relating to Plastic Piping Systems*
D 4396	*Rigid Poly (Vinyl Chloride) (PVC) And Related Plastic Compounds For Non-Pressure Piping Products, Specification For*

Underwriters Laboratories Inc.
333 Pfingsten Road
Northbrook, IL 60062

ANSI/UL 651	*Schedule 40 and 80 Rigid PVC Conduit*
D 1784	*Rigid Poly (Vinyl Chloride)(PVC) Compounds, Specification For*
D 1435	*Practice For Outdoor Weathering of Plastics*

Copyright National Electrical Manufacturers Association
Provided by IHS under license with NEMA
No reproduction or networking permitted without license from IHS
Not for Resale

Copyright National Electrical Manufacturers Association
Provided by IHS under license with NEMA
No reproduction or networking permitted without license from IHS

Not for Resale

Section 2
DEFINITIONS AND ABBREVIATIONS

2.1 Definitions of terms used in this standard shall be in accordance with ASTM F 412 or ASTM D883, or both. Abbreviations shall be in accordance with ASTM D 1600, unless otherwise specified.

2.1.1 Nonmetallic riser U-type guard

A U-shape profile intended to cover and provide suitable mechanical protection for wires or cables, or both, attached directly to utility poles in a vertical direction.

2.1.2 Qualification test

A non-repetitive evaluation conducted on an existing, modified or new product to determine acceptability.

2.1.3 Quality control test

An in-plant test that is conducted on a given test frequency to determine whether a product is in accordance with the specification requirements.

Copyright National Electrical Manufacturers Association
Provided by IHS under license with NEMA
No reproduction or networking permitted without license from IHS

Not for Resale

Copyright National Electrical Manufacturers Association
Provided by IHS under license with NEMA
No reproduction or networking permitted without license from IHS

Not for Resale

Section 3
GENERAL REQUIREMENTS

3.1 MATERIALS

3.1.1 Nonmetallic riser U-type guard

The nonmetallic riser U-type guard shall be made from (1) poly (vinyl chloride) (PVC) plastic compound which meets the minimum cell classification of PVC 12333D as defined in ASTM D 1784 or cell class 11321 as defined in ASTM D4396 or (2) PE (polyethylene) plastic compound which meets the minimum cell classification of PE 335420 C or E as defined in ASTM D 3350.

Clean, reworked material of the same type and grade from the manufacturers' own facility may be used, providing that the U-type guard produced meets the requirements of this standard.

3.2 DIMENSIONS AND LENGTHS

Dimensions of U-type guard shall meet the requirements of Table 3-1A or 3-1B when determined in accordance with 5.2 and Figure 3-1. Bell lengths shall be in accordance with Tables 3-1A or 3-1B.

3.2.1 Length

The overall length, including the integral bell is commonly 5, 8 or 10 ft. ± 1 inch. Other lengths are acceptable as agreed to by the parties involved.

3.3 BELLED END

The U-type guard shall have one end belled to provide overlapping of individual sections.

3.4 RIBBED SURFACES

The U-type guard shall be permitted to have a ribbed outer surface to provide better handling.

3.5 WORKMANSHIP

The U-type guard shall be homogeneous throughout and free from visible cracks or other defects.

It shall be as uniform as practicable in color, opacity, density and other physical properties.

3.6 INSPECTIONS

The manufacturer shall inspect the U-type guard at time of manufacture for compliance to dimensional and performance requirements and for freedom from defects as defined in 4.2.

3.7 FLAMMABILITY

Where flammability resistance is required, it shall meet the requirements of 4.1.2.

Copyright National Electrical Manufacturers Association
Provided by IHS under license with NEMA
No reproduction or networking permitted without license from IHS
Not for Resale

Table 3-1A
Dimensions for PVC U-type guards (inches)

	Nominal Size	A Minimum	B Nominal	C Nominal	D Nominal	Length of Bell Nominal
Extra Heavy Duty (Schedule 80)	2	0.218	2-3/8	4-1/2	2-3/8	2
	3	0.300	3-1/2	6	3-1/2	3
Heavy Duty (Schedule 40)	1-1/2	0.145	1-29/32	3-1/2	1-29/32	2
	2	0.154	2-3/8	4-1/2	2-3/8	2
	3	0.216	3-1/2	6	3-1/2	3
	4	0.237	4-1/2	6-1/2	4-1/2	4
	5	0.258	5-1/2	7-1/2	5-1/2	4
	6	0.280	6-5/8	8-3/4	6-5/8	5
Standard Duty	1	0.100	1-5/16	2-3/8	1-5/16	2
	2	0.100	2-3/8	4-1/2	2-3/8	2
	3	0.150	3-1/2	6	3-1/2	3
	4	0.150	4-1/2	6-1/2	4-1/2	4
	5	0.150	5-1/2	7-1/2	5-1/2	4
	6	0.150	6-5/8	8-3/4	6-5/8	5

Table 3-1B
Dimensions for polyethylene U-type guards (inches)

	Nominal Size	A Minimum	B Nominal	C Nominal	D Nominal	Length of Bell Nominal
Heavy Duty	1	0.125	1-5/16	2-3/8	1-5/16	2
	2	0.125	2-3/8	4-1/2	2-3/8	2
	3	0.150	3-1/2	6	3-1/2	3
	4	0.170	4-1/2	6-1/2	4-1/2	4
	5	0.170	5-1/2	7-1/2	5-1/2	4
	6	0.200	6-5/8	8-3/4	6-5/8	5

Copyright National Electrical Manufacturers Association
Provided by IHS under license with NEMA
No reproduction or networking permitted without license from IHS

Not for Resale

Table 3-1C
Metric for dimensions PVC U-type guards (mm)

	Nominal Size	A Minimum	B Nominal	C Nominal	D Nominal	Length of Bell Nominal
Extra Heavy Duty (Schedule 80)	2	5.54	60.33	114.30	66.33	50.80
	3	7.62	88.90	152.40	88.90	76.20
Heavy Duty (Schedule 40)	1-1/2	3.68	48.41	88.90	48.41	50.80
	2	3.91	60.33	114.30	60.33	50.80
	3	5.49	88.90	152.40	88.90	76.20
	4	6.02	114.30	165.10	114.30	101.60
	5	6.55	139.70	190.50	139.70	101.60
	6	7.11	168.28	222.25	168.28	127.00
Standard Duty	1	2.54	33.34	60.33	33.34	50.80
	2	2.54	60.33	114.30	60.33	50.80
	3	3.81	88.90	152.40	88.90	76.20
	4	3.81	114.30	165.10	114.30	101.60
	5	3.81	139.70	190.50	139.70	101.60
	6	3.81	168.28	222.25	168.28	127.00

Table 3-1D
Metric for dimensions polyethylene U-type guards (mm)

Nominal Size	A Nominal Wall Thickness	B Nominal Wall Thickness	C Nominal Wall Thickness	D Nominal Wall Thickness	Length of Bell Nominal
1	3.18	33.34	60.33	33.34	50.80
2	3.18	60.33	114.30	60.33	50.80
3	3.81	88.90	152.40	88.90	76.20
4	4.32	114.30	165.10	114.30	101.60
5	4.32	139.70	190.50	139.70	101.60
6	5.08	168.28	222.25	168.28	152.40

Copyright National Electrical Manufacturers Association
Provided by IHS under license with NEMA
No reproduction or networking permitted without license from IHS

Not for Resale

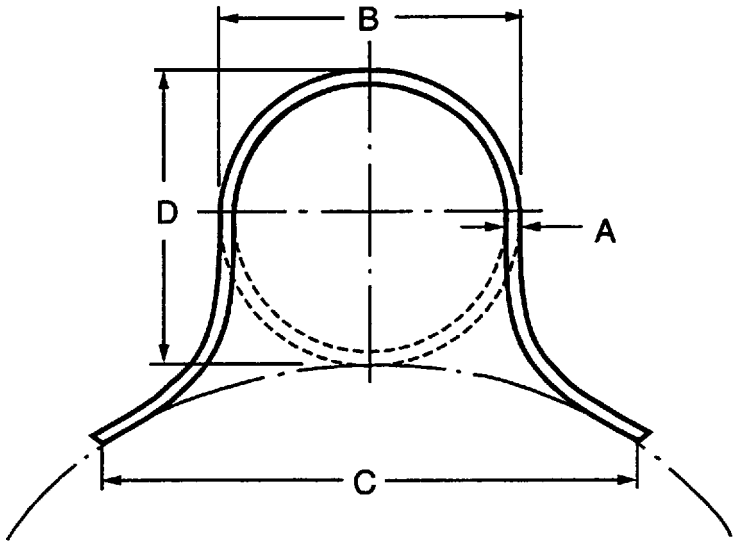

Figure 3-1
DIMENSIONS

Copyright National Electrical Manufacturers Association
Provided by IHS under license with NEMA
No reproduction or networking permitted without license from IHS
Not for Resale

Section 4
PERFORMANCE REQUIREMENTS

4.1 QUALIFICATION TEST

4.1.1 Sunlight resistance

U-type guard shall be made from a nonmetallic material that has been demonstrated to have sunlight resistance as defined in Section 5.4.

4.1.2 Flammability

Where flame-retardant U-type guard is required, it shall meet the requirements of Section 12 of Specification UL 651.

4.2 QUALITY CONTROL TESTS

4.2.1 Room temperature impact resistance

Ten 6-inch (150 mm) specimens on the surface of which there are no cracks, tears, or other imperfections shall be cut from finished lengths of each size of U-type guard to be tested. The specimens, the test apparatus, and the surrounding air shall be in thermal equilibrium with one another at a temperature of 73.4°F ± 3.6°F (23°C ± 2.0°C) during the test. The test apparatus and method shall be described in 5.3.

4.2.2 Low temperature impact resistance

Ten 6-inch (150 mm) specimens on the surface of which there are no cracks, tears, or other imperfections shall be cut from finished lengths of each size of U-type guard to be tested. The specimens shall then be conditioned at the temperature specified in Tables 5-1A and 5-1B for 1 hour in a liquid medium or 5 hours in a cold chamber. The test apparatus shall be at the ambient temperature of the test area. The samples shall be removed from the cold chamber and tested within a maximum of 15 seconds in accordance with 5.3.

Copyright National Electrical Manufacturers Association
Provided by IHS under license with NEMA
No reproduction or networking permitted without license from IHS
Not for Resale

Copyright National Electrical Manufacturers Association
Provided by IHS under license with NEMA
No reproduction or networking permitted without license from IHS

Not for Resale

Section 5
TEST METHODS

5.1 CONDITIONING, TEST CONDITIONS, AND SAMPLING

5.1.1 Conditioning test specimens

When conditioning is required, the test specimens shall be conditioned in accordance with Procedure A in ASTM D 618. Shorter time periods shall be permitted for quality control testing if it can be shown that specimens have reached equilibrium.

5.1.2 Test conditions

Tests shall be conducted at ambient temperature of the test area, unless otherwise specified.

5.1.3 Sampling

Samples shall be selected at random.

5.2 DIMENSIONS

5.2.1 Nominal dimensions

Dimension A shall be measured with a micrometer. Dimensions B, C, D and bell length in Tables 3-1A and 3-1B can be measured using a commercial scale. See Figure 3-1.

5.3 IMPACT RESISTANCE

The specimens shall be tested in accordance with Impact Resistance of Thermoplastic Pipe and Fittings By Means of Tup, ASTM D 2444, using a 75 pound (34 kg) steel tup in the form of a 6-inch (150 mm) right circular cylinder with rounded edges for heavy duty test and a 20-pound (9-kg) steel tup in the form of a 2-inch (51 mm) right circular cylinder with rounded edges for all other tests. The flanges of a specimen shall be restrained as shown in Figure 5-1. The restraint will simulate installation on a pole.

The minimum impact strength shall be in accordance with Tables 5-1A and 5-1B. The sample does not meet the requirements of this standard if more than three of the ten specimens exhibit a split or crack greater than 1/32-inch in length.

5.4 SUNLIGHT RESISTANCE TEST

Using Outdoor Weathering of Plastics; ASTM D 1435 as a guide, ten impact specimens of any one size U-type guard shall be exposed outdoors in a fixed, 45° South position to a minimum of 100,000 Langleys.[1] At the completion of the exposure period, the exposed specimens shall be tested for impact resistance per paragraph 4.2.1 of these standards. The impact resistance level of the exposed samples shall not be less than 50 percent of the values shown in Tables 5-1A and 5-1B. All other sizes made from the same material shall be considered to meet the sunlight resistance requirements based on sunlight resistance testing of any one size.

---

[1] A Langley is a unit for measuring solar radiation and for timing outdoor exposures. Each Langley unit denotes one gram caloric per sq. Cm or 3.69 BTU's per ft^2. 180,000 Langleys are approximately equivalent to 12 months exposure at 45° South in Arizona.

Copyright National Electrical Manufacturers Association
Provided by IHS under license with NEMA
No reproduction or networking permitted without license from IHS
Not for Resale

Table 5-1A
Minimum weight drop impact resistance test
PVC and flame retardant polyethylene*

	Nominal Size		Room Temperature Test at 74°F (23°C)		Low Temperature Test at 32°F (0°C)	
	Inches	(mm)	Ft.-Lbs.	Joules	Ft.-Lbs.	Joules
Extra Heavy Duty	2	(25)	N/A		150	(203)
	3	(51)	N/A		260	(353)
Heavy Duty	1-1/2	(38)	300	(407)	75	(102)
	2	(51)	300	(712)	75	(102)
	3	(76)	525	(712)	130	(176)
	4	(102)	525	(712)	130	(176)
	5	(127)	525	(712)	130	(76)
Standard Duty	1	(25)	150	(203)	40	(54)
	2	(51)	190	(258)	50	(68)
	3	(76)	220	(298)	55	(75)
	4	(102)	220	(298)	55	(75)
	5	(127)	220	(298)	55	(75)

* Polyethylene material meeting requirement of section 4.1.2.

Table 5-1B
Minimum weight drop impact resistance test
polyethylene high molecular weight polyethylene

Nominal Size	Metric Designator	Wall Thickness Inches	(mm)	74°F (23° C) Ft.-.lb. (Joules)		32°F (0°C) Ft.-.lb. (Joules)		0°F (-18°C) Ft.-.lb. (Joules)	
1	(27)	0.125	(3.18)	225	(305)	225	(305)	150	(203)
2	(53)	0.125	(3.18)	525	(712)	525	(712)	300	(407)
3	(78)	0.150	(3.81)	525	(712)	525	(712)	300	(407)
4	(103)	0.170	(4.32)	525	(712)	525	(712)	300	(407)
5	(129)	0.170	(4.32)	525	(712)	525	(712)	200	(271)
6	(155)	0.200	(5.08)	525	(712)	525	(712)	200	(271)

Copyright National Electrical Manufacturers Association
Provided by IHS under license with NEMA
No reproduction or networking permitted without license from IHS
Not for Resale

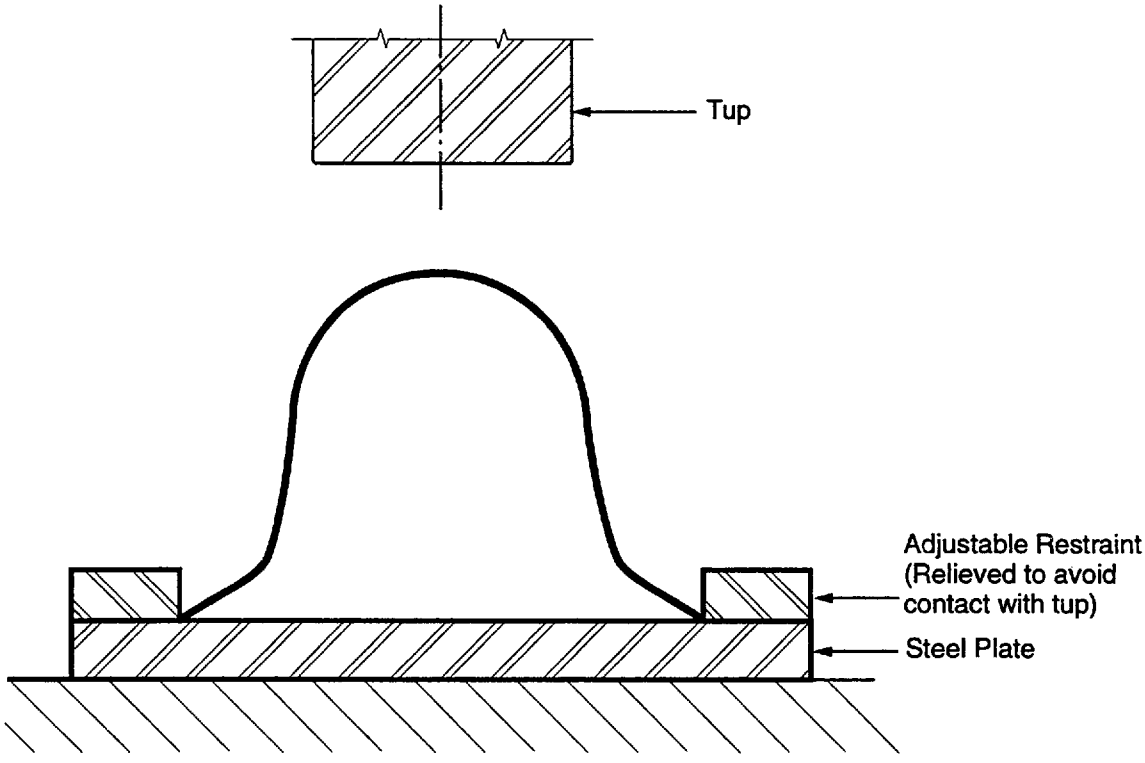

Figure 5-1
FLANGE RESTRAINT

Copyright National Electrical Manufacturers Association
Provided by IHS under license with NEMA
No reproduction or networking permitted without license from IHS

Not for Resale

Copyright National Electrical Manufacturers Association
Provided by IHS under license with NEMA
No reproduction or networking permitted without license from IHS

Not for Resale

Section 6
MARKING

6.1 MARKING

Each length of U-type guard shall be clearly and durably marked at least every 5 feet with the material designation, nominal size and duty of the U-type guard, lot control number, and with the name or trademark of the manufacturer, or both.

Product meeting the requirements of Section 4.1.2 shall be marked flame retardant.

Copyright National Electrical Manufacturers Association
Provided by IHS under license with NEMA
No reproduction or networking permitted without license from IHS

Not for Resale

Copyright National Electrical Manufacturers Association
Provided by IHS under license with NEMA
No reproduction or networking permitted without license from IHS

Not for Resale

Section 7
INSTALLATION

7.1 INSTALLATION PROCEDURES

The recommended installation is to utilize a lag screw with a cushioned washer. The lag screw installation depth should permit movement of the cable shield due to linear expansion during exposure to wide temperature ranges.

For proper installation, refer to the procedures recommended by the manufacturer.

Copyright National Electrical Manufacturers Association
Provided by IHS under license with NEMA
No reproduction or networking permitted without license from IHS

Not for Resale

Copyright National Electrical Manufacturers Association
Provided by IHS under license with NEMA
No reproduction or networking permitted without license from IHS

Not for Resale

STD.NEMA TC 19-ENGL 1997 ■ 6470247 0513142 930 ■



NATIONAL ELECTRICAL MANUFACTURERS ASSOCIATION • 1300 NORTH 17TH STREET • SUITE 1847 • ROSSLYN, VA 22209

Copyright National Electrical Manufacturers Association
Provided by IHS under license with NEMA
No reproduction or networking permitted without license from IHS
Not for Resale