NEMA SG*6 90 ■ 6470247 0020504 8 ■

NEMA STANDARDS PUBLICATION NO. SG 6

nema

Power Switching Equipment

NEMA

NATIONAL ELECTRICAL MANUFACTURERS ASSOCIATION ■ 2101 L STREET, N.W., WASHINGTON, D.C. 20037

Copyright National Electrical Manufacturers Association
Provided by IHS under license with NEMA
No reproduction or networking permitted without license from IHS
Not for Resale

NEMA SG*6 90 ■ 6470247 0020505 T ■

SG 6

POWER SWITCHING EQUIPMENT

Published by:

National Electrical Manufacturers Association
2101 L Street, N.W.
Washington, DC 20037

© 1990 by National Electrical Manufacturers Association

Copyright National Electrical Manufacturers Association
Provided by IHS under license with NEMA
No reproduction or networking permitted without license from IHS
Not for Resale

TABLE OF CONTENTS

	FOREWORD	i
	SCOPE	ii
Section 1	REFERENCED STANDARDS	1
Section 30	DEFINITIONS AND REQUIREMENTS FOR HIGH-VOLTAGE AIR SWITCHES, INSULATORS AND BUS SUPPORTS	4
Section 31	APPARATUS INSULATORS FOR USE WITH HIGH-VOLTAGE AIR SWITCHES	5
Section 32	SCHEDULES OF PREFERRED RATINGS, MANUFACTURING SPECIFICATIONS AND APPLICATION GUIDE FOR HIGH-VOLTAGE AIR SWITCHES, BUS SUPPORTS AND SWITCH ACCESSORIES	6
Section 33	RATED CONTROL VOLTAGES AND THEIR RANGES FOR HIGH-VOLTAGE AIR SWITCHES	9
Section 34	TEST CODE FOR HIGH-VOLTAGE AIR SWITCHES	10
Section 35	GUIDE FOR THE INSTALLATION, OPERATION AND MAINTENANCE OF POWER SWITCHING EQUIPMENT	11
Section 36	OUTDOOR SUBSTATIONS (Structure, Pole-top Frames, and Other Parameters)	12
Appendix A	TABLES OF ELECTRICAL, MECHANICAL, AND PHYSICAL CHARACTERISTICS OF INDOOR PORCELAIN INSULATORS	17

Copyright National Electrical Manufacturers Association
Provided by IHS under license with NEMA
No reproduction or networking permitted without license from IHS
Not for Resale

Foreword

This is one of two NEMA Standards Publications covering the range of low- to high-voltage switchgear products. (SG 4-1990 is entitled *Alternating-Current High-Voltage Circuit Breaker*.) Such products are generally applied to utility and industrial use with a portion going to commercial applications. User and general interest input played a significant part in the development of the product requirements carried by this publication. It, as well as other NEMA Standards Publications, is not intended to stand alone for without exception:

1. It adopts by reference the appropriate American National Standards (approved by Accredited Standards Committee C37, Power Switchgear) as the main body of this NEMA publication.
2. It offers a vehicle for getting into print the proposed NEMA revisions of the pertinent C37 Standards, until such time as those revisions can be evaluated, approved and published as a revision of the particular American National Standard.
3. It covers additional information about a product of specific interest to the manufacturing community, which the ANSI Standards Committee does not include in its scope.

Within this NEMA publication, therefore, the main focus is on American National Standards and the consensus method of standards approval used by ANSI.

Switchgear standards are, for the most part, developed through the combined and separate efforts of the Institute of Electrical and Electronics Engineers, Electric Light and Power and the National Electrical Manufacturers Association. Accredited Standards Committee C37 serves as the administrator through which are channeled all switchgear proposals intended for eventual publication as American National Standards. It is within these organizations that the principal manufacturer-user exchange is accomplished. This exposes product requirements to those people having the direct responsibility for the use, design, application, maintenance, and acceptance of the products and thus assures an objective and critical review within the voluntary standards program.

The standards in this publication are periodically reviewed by the Power Switching Equipment Voting Classification of the Switchgear Section of NEMA for any revisions necessary to keep them up-to-date with advancing technology. Proposed or recommended revisions should be submitted to:

Vice President, Engineering
National Electrical Manufacturers Association
2101 L Street, N.W.
Washington, DC 20037

Copyright National Electrical Manufacturers Association
Provided by IHS under license with NEMA
No reproduction or networking permitted without license from IHS
Not for Resale

Scope

The Outdoor High-Voltage Switches (8-SG-VI) voting classification includes the following:

Power switching equipment rated above 1000 volts ac and 3200 volts dc;
Grounding switches;
Group-operated multipole horn-gap and disconnecting switches; and
Hook-operated disconnecting switches.

Excluded from this scope are the following:

Porcelain-housed hook operated disconnecting switches;
Insulator unit adapters and fittings for equipment in this scope;
Interrupter switches;
Oil-immersed disconnecting switches;
Switch hooks or sticks;
Indoor insulator units and accessories;
Interlocks, auxiliary switches, and accessories designed with or for equipment in this scope;
Crossarms, buck arms and pole-top frames used as switch mountings, either steel or aluminum;
Outdoor stations-structures of steel, aluminum or wood; and
Renewal and spare parts designed exclusively for use in the products enumerated above and not included in the scope of some other subdivision.

NOTE: Excluded from this scope are outdoor insulator units when sold separately, since they fall within the scope of the High Voltage Insulator Section.

Also excluded from the product scope of this Voting Classification are all products falling within the product scope of the Voting Classification when assembled in complete switchgear equipments. These fall within the product scope of the Power Switchgear Assemblies Voting Classification (8-SG-V).

Copyright National Electrical Manufacturers Association
Provided by IHS under license with NEMA
No reproduction or networking permitted without license from IHS
Not for Resale

POWER SWITCHING EQUIPMENT

Section 1
REFERENCED STANDARDS

In this standard reference is made to the following publications. Copies are available from the sources indicated.

Aluminum Association
900 19th Street, N.W.
Washington, DC 20006

ASD 1-1984	*Aluminum Standards and Data*
ECH 56-1982	*Aluminum Electrical Conductor Handbook*
SAS 30	*Specification for Aluminum Structures*

American Institute of Steel Construction, Inc.
400 N.Michigan Avenue
Wrigley Building, 8th Floor
Chicago, IL 60611

AISC M01-80	*Manual of Steel Construction*

American National Standards Institute
1430 Broadway
New York, NY 10018

ANSI/IEEE C37.30-1971	*Definitions and Requirements for High-Voltage Air Switches, Insulators and Bus Supports, including Supplement ANSI C37.30c-1984, C37.30e-1984, and C37.30g-1985*
ANSI/IEEE C37.34-1971	*Test Code for High-Voltage Air Switches including Supplement ANSI C37.34a-1978*
ANSI/IEEE C37.100-1981	*Definitions for Power Switchgear*
C2.1-1984	*National Electrical Safety Code*
C29.1-1982	*Test Methods for Electrical Power Insulators*
C29.8-1985	*Wet-Process Procelain Insulators (Apparatus, Cap and Pin Type)*
C29.9-1983	*Wet-Process Procelain Insulators (Apparatus, Post Type)*
C37.32-1972	*Schedules of Preferred Ratings, Manufacturing Specifications, and Application Guide for High-Voltage Air Switches, Bus Supports, and Switch Accessories*
C37.33-1987	*Rated Control Voltages and Their Ranges for High-Voltage Air Switches*
C37.35-1976	*Application, Installation, Operation, and Maintenance of High-Voltage Air Disconnecting and Load Interrupter Switches*

Copyright National Electrical Manufacturers Association
Provided by IHS under license with NEMA
No reproduction or networking permitted without license from IHS
Not for Resale

American Society for Testing and Materials
1916 Race Street
Philadelphia, PA 19103

A36/A36M-87	*Specification for Structural Steel*
A123 REV A-89	*Standard Specification for Zinc (Hot-Dip Galvanized) Coatings on Iron and Steel Products*
A283/A283M-88	*Standard Specification for Low and Intermediate Tensile Strength Carbon Steel Plates*
A394-87	*Specification for Zinc Coated Steel Transmission Tower Bolts*
A663-85	*Specification for Steel Bars, Carbon, Merchant Quality Mechanical Properties*
A675/A675M-89	*Standard Specification for Steel Bars, Carbon, Hot-Wrought, Special Quality, Mechanical Properties*
B188-88	*Specification for Seamless Copper Bus, Pipe and Tube*
D962-81	*Specification for Aluminum Pigments, Powder and Paste for Paints*

American Society of Civil Engineers
345 East 47th Street
New York, NY 10017

Proceedings of the American Society of Civil Engineers, "Suggested Specifications for Structure of Aluminum Alloys 6061-T6 and 6062-T6

General Services Administration
Specifications Section, Room 6654
Washington, DC 20407

TT-P-86G	*Paint, Red-Lead-Base, Ready-Mixed*
TT-P-645A	*Primer, Paint, Zinc-Chromate, Alkyd Type*
TT-P-81G	*Varnished, Mixing, for Aluminum Paint*

Institute of Electrical and Electronics Engineers
345 East 47th Street
New York, NY 10017

142-1982	*Recommended Practice for Grounding for Industrial and Commercial Power Systems*
605-1987	*Guide for Design of Substation Rigid-Bus Structure*

Copyright National Electrical Manufacturers Association
Provided by IHS under license with NEMA
No reproduction or networking permitted without license from IHS
Not for Resale

National Electrical Manufacturers Association
2101 L Street, N.W.
Washington, DC 20037

107-1987 — *Methods of Measurement of Radio Influence Voltage of High-Voltage Apparatus*

U.S.Department of Agriculture Rural Electrification Administration
14th Street and Independence Avenue, S.W.
Washington, DC 20250

REA Bulletin 65-1 — *Design Guide for Rural Substations*

Copyright National Electrical Manufacturers Association
Provided by IHS under license with NEMA
No reproduction or networking permitted without license from IHS
Not for Resale

Section 30
DEFINITIONS AND REQUIREMENTS FOR HIGH-VOLTAGE AIR SWITCHES, INSULATORS, AND BUS SUPPORTS

APPLICABLE AMERICAN NATIONAL STANDARDS

The ANSI/IEEE standards C37.30, C37.30c, C37.30e, C37.30g and C37.100 have been approved by NEMA and constitute Section 30 of this publication.

Copyright National Electrical Manufacturers Association
Provided by IHS under license with NEMA
No reproduction or networking permitted without license from IHS
Not for Resale

Section 31
APPARATUS INSULATORS FOR USE WITH HIGH-VOLTAGE AIR SWITCHES

APPLICABLE AMERICAN NATIONAL STANDARDS

The ANSI Standards C29.1, C29.8, and C29.9 constitute Section 31 of this publication covering outdoor insulators. Electrical and mechanical characteristics of indoor porcelain insulators are shown in Tables 1 through 4 of Appendix A.

Copyright National Electrical Manufacturers Association
Provided by IHS under license with NEMA
No reproduction or networking permitted without license from IHS
Not for Resale

Section 32
SCHEDULES OF PREFERRED RATINGS, MANUFACTURING SPECIFICATIONS AND APPLICATION GUIDE FOR HIGH-VOLTAGE AIR SWITCHES, BUS SUPPORTS, AND SWITCH ACCESSORIES

APPLICABLE AMERICAN NATIONAL STANDARDS

The ANSI standard C37.32 has been approved by NEMA and, with the following additions (given in Tables 32-1 and 32-2), constitutes Section 32 of this publication.

Copyright National Electrical Manufacturers Association
Provided by IHS under license with NEMA
No reproduction or networking permitted without license from IHS
Not for Resale

Copyright National Electrical Manufacturers Association
Provided by IHS under license with NEMA
No reproduction or networking permitted without license from IHS

Not for Resale

Table 32-1
OUTDOOR SUBSTATIONS—BASIC PARAMETERS

Line No.	Rated Max. Volt, kV rms	Rated Withstand Voltage		Minimum Metal-to-Metal Distance Between Rigidly Supported Energized Conductors, Inches (meters)	Ground Clearance, Inches (meters)		Recommended Phase Spacing, Center to Center, Inches (meters)			Recommended Minimum Clearance Between Overhead Conductor and Ground for Personal Safety, Feet (Meters)	Withstand S.S., Crest kV
		Impulse 1.2×50 μs Wave kV Crest	60 Hz kV rms, Wet, 10 sec.		Recommended	Minimum	Horn Gap Switch and Expulsion Type Fuses	Horizontal Break Disc. Switches	Bus Supports, Vertical Brk. Disc. Switches Power Fuses Non-expulsion Types Rigid Conductors		
	(1)	(2)	(3)	(4)	(5)	(6)	(7)	(8)	(9)	(10)	(11)
1	8.3	95	30	7 (0.18)	7.5 (0.19)	6 (0.15)	36 (0.91)	30 (0.76)	18 (0.46)	8 (2.44)	...
2	15.5	110	45	12 (0.30)	10 (0.25)	7 (0.18)	36 (0.91)	30 (0.76)	24 (0.61)	9 (2.74)	...
3	25.8	150	60	15 (0.38)	12 (0.30)	10 (0.25)	48 (1.22)	36 (0.91)	30 (0.76)	10 (3.05)	...
4	38.0	200	80	18 (0.46)	15 (0.38)	13 (0.33)	60 (1.52)	48 (1.22)	36 (0.91)	10 (3.05)	...
5	48.3	250	100	21 (0.53)	18 (0.46)	17 (0.43)	72 (1.83)	60 (1.52)	48 (1.22)	10 (3.05)	...
6	72.5	350	145	31 (0.79)	29 (0.74)	25 (0.64)	84 (2.13)	72 (1.83)	60 (1.52)	11 (3.35)	...
7	121	550	230	53 (1.35)	47 (1.19)	42 (1.07)	120 (3.05)	108 (2.74)	84 (2.13)	12 (3.66)	...
8	145	650	275	63 (1.60)	52.5 (1.33)	50 (1.27)	144 (3.66)	132 (3.35)	96 (2.44)	13 (3.96)	...
9	169	750	315	72 (1.83)	61.5 (1.56)	58 (1.47)	168 (4.27)	156 (3.96)	108 (2.74)	14 (4.27)	...
10	242	900	385	89 (2.26)	76 (1.93)	71 (1.80)	192 (4.88)	192 (4.88)	132 (3.35)	15 (4.57)	...
11	242	1050	455	105 (2.67)	90.5 (2.30)	83 (2.11)	216 (5.49)	216 (5.49)	156 (3.96)	16 (4.88)	...
12	362	1050	455	105 (2.67)	90.5 (2.30)	84 (2.13)*	216 (5.49)	216 (5.49)	156 (3.96)	16 (4.88)	650
13	362	1300	525	119 (3.02)	106 (2.69)	104 (2.64)*	240 (6.10)	...	174 (4.43)	18 (5.49)	739
14	550	1550	620	...	...	124 (3.15)*	300 (7.62)	...	...	...	808
15	550	1800	710	...	...	144 (3.66)*	324 (8.23)	...	300 (7.62)	...	898
16	800	2050	830	...	...	166 (4.22)*	600 (15.24)	...	...	...	982

NOTE: For insulator data, refer to ANSI C29.8 and C29.9.

*Ground clearance for voltages 362 kV and above is selected on the premise that at this level, selection of the insulation depends on switching surge levels of the system. The values were selected from Table 1 of IEEE Transaction Paper T-72-131-6 (Vol. No. 5, page 1924), which is a report of the Transmission Substations Subcommittee. For additional switching surge values and ground clearances, refer to ANSI C2.

Table 32-2
PREFERRED RATINGS FOR OUTDOOR AIR SWITCHES OF VARIOUS CONSTRUCTIONS

Line Number	Rated Maximum Voltage, kV, rms	RIV Test Voltages and Limits	
		Test Voltage, kV*	Limit of RIV,† Microvolts at 1 Megahertz
	(1)	(16)	(17)
1	8.3	...	...
2	15.5	...	...
3	25.8	...	...
4	38.0	...	...
5	48.3	...	...
6	72.5	...	...
7	121	77	500
8	145	92	500
9	169	107	500
10	242	154	500
11	242	154	500
12	362	230	500
13	362	230	500
14	550	349	500
15	550	349	500
16	800	508	750

*Test voltages in column (16) are 110% of the line-to-ground voltages corresponding to the rated maximum voltages shown in column (1). Air switches previously tested at 105% of line-to- ground voltage prior to adoption of ANSI/IEEE C37.34a shall be acceptable.

†When measured in accordance with NEMA Standards Publication No. 107.

NEMA Standard 3-5-1990.

Copyright National Electrical Manufacturers Association
Provided by IHS under license with NEMA
No reproduction or networking permitted without license from IHS
Not for Resale

Section 33
RATED CONTROL VOLTAGES AND THEIR RANGES FOR HIGH-VOLTAGE AIR SWITCHES

APPLICABLE AMERICAN NATIONAL STANDARD

The ANSI standard C37.33 has been approved by NEMA for inclusion in Section 33.

NEMA Standard 3-5-1990.

Copyright National Electrical Manufacturers Association
Provided by IHS under license with NEMA
No reproduction or networking permitted without license from IHS
Not for Resale

Section 34
TEST CODE FOR HIGH-VOLTAGE AIR SWITCHES

APPLICABLE AMERICAN NATIONAL STANDARD

The ANSI/IEEE Standard C37.34 and supplements C37.34a, C37.34b, C37.34d, and C37.34e have been approved by NEMA for inclusion in Section 34.

NEMA Standard 3-5-1990.

Copyright National Electrical Manufacturers Association
Provided by IHS under license with NEMA
No reproduction or networking permitted without license from IHS
Not for Resale

Section 35
GUIDE FOR THE INSTALLATION, OPERATION, AND MAINTENANCE OF POWER SWITCHING EQUIPMENT

35.1 APPLICABLE AMERICAN NATIONAL STANDARDS

ANSI C37.35 has been approved by NEMA for inclusion in Section 35.

Authorized Engineering Information 3-5-1990.

35.2 ADDITIONAL INFORMATION: RECEIPT AND PREPARATION OF INSTALLATION

35.2.1 PREPARATION OF STRUCTURE

a. Location
Consideration should be given to the location of the structure relative to smoke, dirt and fumes. It is desirable to locate the structure in a place as free from such conditions as possible as they may cause rapid deterioration of the conductors and contact joints, corrode parts, cause parts to make imperfect contact and reduce the flashover value of the insulation.

b. Foundations
Foundations should be carefully prepared and of sufficient size, depth, and strength to adequately withstand all possible strains which the structure may be required to meet.

c. Plumbing and Alignment
It is important that the structure be carefully plumbed and aligned; otherwise the equipment may not line up properly and, in addition to bad appearance, might cause difficulties in mounting and operating.

d. Weatherproofing
Switching equipment parts have noncorrosive or weather-resistant finishes adequate for the conditions under which the equipment is to be used. It is recommended that the structure be weatherproofed to withstand the elements to the same degree as the equipment.

Rust deposits from the structure may result in failure of the insulators or loosening of the structure which might become sufficiently flexible to interfere with the satisfactory operation of the equipment.

35.2.2 ERECTION OF EQUIPMENT

a. Placing Equipment
Equipment should be so placed as to provide ready access for operation. Hook-operated switches should be so placed that they are safely operable by means of a switch hook without causing the operator to get too near to live parts, lines, buses or insulators.

b. Line Dead-ending
Incoming or outgoing lines or conductors on which there is any appreciable strain should be provided with adequate strain-type insulating supports in order to remove from the switching equipment any undue strains which might cause poor contact or throw the equipment out of proper alignment.

Lines should be anchored to the structure or nearby poles or towers. If lines are anchored to towers, they should be arranged for direct strains and should not twist the tower and throw the bases of equipment out of line.

If wood poles and wood crossarms are used for the lines, it is recommended, in general, that the insulators on steel structures to which such lines are connected be provided with a higher factor of safety than the line insulators. Where steel poles or towers are used, this factor of safety is not so essential unless the station is subject to fumes, smoke or other dirt.

c. Bus Conductors
It is important that the bus arrangements which make use of strain-type insulation be rigidly installed. Because of the physical dimensions of the structure, such conductors should be under sufficient strain to prevent excessive swaying.

Conductors should be run as nearly as possible in straight lines and should be supported sufficiently to withstand the mechanical load and magnetic stresses.

Expansion and contractions of conductors due to temperature changes may develop heavy stresses on the supporting insulators and connected equipment. In long heavy bus structures, care should therefore be taken to see that means are provided to allow for expansion. The importance of this provision depends upon the length of the conductors and the possible temperature variations.

The cantilever strength of conductor supports is becoming an increasingly important factor due to the weight of buses and to elec-

Copyright National Electrical Manufacturers Association
Provided by IHS under license with NEMA
No reproduction or networking permitted without license from IHS
Not for Resale

tromagnetic stresses under short circuit. For this reason, the height of bus supports should be kept to a minimum consistent with the full flashover value of the porcelain body.

On alternating-current conductors, the conductor clamps should not form a closed magnetic circuit around the conductor.

Authorized Engineering Information 3-5-1990.

Copyright National Electrical Manufacturers Association
Provided by IHS under license with NEMA
No reproduction or networking permitted without license from IHS

Not for Resale

Section 36
OUTDOOR SUBSTATIONS
(Structure, Pole-top Frames, and Other Parameters)

SCOPE

This standard establishes major design parameters (such as load, clearances, and materials)for outdoor substations.

36.1 DEFINITIONS

36.1.1 Outdoor Substation

An outdoor substation is an open type of structure for supporting high-voltage air-insulated power equipment.

36.1.2 Classes of Structures

Substation structures shall be of one of the following classes:

a. Class "A" Structures
Class "A" structures are those intended for the support of high-voltage equipment (i.e., air switches, interrupter switches, and circuit interrupting devices).

b. Class "B" Structures
Class "B" structures are those on which the deflections within the limits do not affect the performance of supported equipment (i.e., dead end structures, bus supports and miscellaneous equipment supports).

36.1.3 Span

Span is the distance between supporting members or the length of cantilever.

36.1.4 Bent

A bent consists of one or more horizontal members supported by two or more columns effectively all in one vertical plane. It includes any bracing between these members.

NEMA Standard 3-5-1990.

36.2 GENERAL RECOMMENDATION

Recognition should be given to four essential points which characterize structures for outdoor substations.

36.2.1 Accuracy and Performance

Structures should be accurately fabricated to facilitate erection. Specific consideration should be given to prevent damage to protective coating required by certain materials.

36.2.2 Rigidity

Consideration should be given to providing sufficient rigidity so that all equipment, such as air switches, interrupter switches, and circuit interrupting devices, will operate properly and so that deflections of members will not exceed the limits specified by the equipment manufacturer.

36.2.3 Erection

Outdoor substations are frequently erected by persons with varied levels of experience as structural erectors. This calls for great detail and clearness in drawings, accuracy in fabrications, and care in marking the structural components.

36.2.4 Design

Frequently it is necessary to deviate from conventional practices in structural design in order to provide electrical and mechanical clearances or to prevent interference with switch operating mechanisms.

Authorized Engineering Information 3-5-1990.

36.3 MATERIALS*

The following materials are those which are most commonly used in outdoor substations.

* Additional information on referenced materials may be obtained from the sources listed in Section 1.

36.3.1 Steel

The physical properties of steel should be at least those of ASTM Specification A36/A36M and for steel bolts at least those of ASTM A394.

36.3.2 Aluminum

For structural members, the physical properties should be at least those of Aluminum Alloy 6061-T6 and for bolts those of Aluminum Alloy 2024-T3. For bus conductors, the physical properties should be at least those of Aluminum Alloy 6063-T6.

36.3.3 Copper

For bus conductors, copper pipe meeting the requirements of ASTM Specification B188 is commonly used; square copper bar and square tubing are also used.

Copyright National Electrical Manufacturers Association
Provided by IHS under license with NEMA
No reproduction or networking permitted without license from IHS
Not for Resale

36.3.4 Wood

Wood is a natural material with variable characteristics. If used as structure members it should be carefully selected not only as to the type of wood but also to grain, condition, presence of defects, and such. The types of wood most frequently used in substation constructions are western red cedar and southern yellow pine. Proper treatment of wooden structural members usually enhances their durability.

Authorized Engineering Information 3-5-1990.

36.4 LOADING

Structures should be designed to withstand apparatus loads, dead loads, wind loads, snow and ice loads, other specified loads, and unusual service conditions. The apparatus manufacturer should be consulted with respect to specific loads and unusual service conditions.

Authorized Engineering Information 3-5-1990.

36.4.1 Apparatus Loads

Apparatus loads (including conductors) consist of the following:

1. Static Loads.
   a. Weight of the apparatus.
   b. Conductor weight (not line tension).
2. Operating and Dynamic Loads.
   a. Friction forces, moments, and torques due to mechanical operation of apparatus such as air switches and grounding switches.
   b. Dynamic forces, moments, and torques due to accelerating loads of high-speed circuit-interrupting devices when specified.
   c. Magnetic forces due to short-circuit current.

36.4.2 Dead Loads

Dead loads consist of the weight of the structure and line tensions. If strain conductors and static lines are used, the strain load per conductor and line shall be specified by the user. When not specified, the strain load shall be assumed to be 1500 pounds (6672 N) per conductor in a direction of 15 degrees from normal to the face of the structure.

36.4.3 Wind Loads

Wind load on the structures and apparatus mounted thereon shall be assumed to be 25 pounds per square foot (1197 Pa) of the vertical projection of the structural members for the first bent. [This is based on an approximate 77.2 mph (34.5 m/s).]

For any successive bents, the wind pressure will be reduced in proportion to the shade factor "K" as defined by the following equation:

$$K = \frac{L}{4W} \leq 1$$

Where:

L = Distance from front of the first bent to front of the following bent, in feet.

W = The least dimension perpendicular to the wind direction in feet.

It is assumed that shading is ineffective at a distance greater than 4W and that full wind pressure is applied to the next bent; therefore, K will be equal to 1 when the distance between following bents is equal to or greater than 4W, and will be less than 1 only when the distance is less than 4W.

For lattice towers, lattice box columns and trusses, the exposed area shall be assumed to be 1½ times the total exposed area of the component members.

When a wind load other than 25 pounds per square foot (1197 Pa) is used, the following formulas shall be used for evaluating the static wind pressure:

1. On flat surfaces, $P = 0.0042\ V^2$ lbs./sq. ft.
2. On cylindrical surfaces, $P = 0.0026\ V^2$
3. On octagonal surfaces, $P = 0.0034\ V^2$

Where:

P = Pressure in pounds per square foot of projected area.

V = Wind velocity in miles per hour.

36.4.4 Ice Loads

Structures shall be designed to withstand ice loading on apparatus, conductors and the structure itself, as dictated by geographical location.

The degree of loading due to ice shall be considered as light, medium, or heavy in accordance with the geographical areas shown in the loading map in ANSI C2, Part 2, Section 250, and shall be calculated in accordance with Table 36-1. Ice weighs 57 pounds per cubic foot (913 kg/m); as a general guide, no ice is equivalent to light load, ¼ inch of ice to medium load, and½ inch of ice to heavy load.

NEMA Standard 3-5-1990.

36.5 DEFLECTIONS

For the purpose of this standard, deflection is defined as the deviation of a structural member from its intended theoretical design position to its actual position under maximum loading conditions.

The following deflection limits shall apply when the structure is under a set of compatible loads consisting of apparatus loads, dead loads, wire loads, ice loads, and wind loads (described in 36.4) without short-circuit forces, unless it is specified that all forces shall act simultaneously.

NOTE: Very often high wind loads do not occur simultaneously with heavy ice conditions or with the highest wire tension. (This note is approved as Authorized Engineering Information.)

Copyright National Electrical Manufacturers Association
Provided by IHS under license with NEMA
No reproduction or networking permitted without license from IHS
Not for Resale

Table 36-1
ICE LOADING

Ice Thickness, inches	Ice Load as Percent of Weight of Lattice Structures		Ice Load in Pounds for All Other Structures (Including Conductors) and Materials	Ice Load as Percent of Weight of Apparatus*
	Steel	Aluminum		
1/4	25	75	1.2 × ice area in sq. ft	25
1/2	50	100	2.4 × ice area in sq. ft	50

*Where apparatus such as air switches, grounding switches, interrupter switches, and circuit-interrupting devices are required to operate under iced conditions, the increased friction and dynamic forces shall be considered in apparatus loads.

For example, in lattice structures the weight of 1/2 inch of ice may be considered to be 50 percent of the weight of steel structures and 150 percent of the weight of aluminum structures. Structures made of other materials shall take into account a load in pounds due to 1/2 inch of ice calculated by multiplying the area of the exposed surface in square feet by 2.4.

36.5.1 Class "A" Structures

The horizontal deflection of vertical members shall be limited to 1/100 of the vertical height of the structure. The vertical deflection of horizontal members shall be limited to 1/200 of the span. The horizontal deflection of horizontal members shall be limited to 1/200 of the span.

36.5.2 Class "B" Structures

The horizontal deflection of vertical members shall be limited to 1/50 of the vertical height of the structure. The vertical deflection of horizontal members shall be limited to 1/200 of the span. The horizontal deflection of horizontal members shall be limited to 1/100 of the span.

NEMA Standard 3-5-1990.

In unusual applications, such as the installation of high speed circuit-interrupting devices, the above deflection limits may have to be reduced in accordance with the manufacturer's instructions.

Authorized Engineering Information 3-5-1990.

36.6 STRESSES

The allowable stresses for structural members under static loads plus dead loads shall be calculated and have a factor of safety according to the methods outlined in the American Institute of Steel Construction publication *Manual of Steel Construction* and the Aluminum Association publication *Specification for Aluminum Structures* (Section 1 of SAS-30).

For materials other than steel and aluminum, the recommended factors of safety and allowable stress calculations shall be in accordance with the appropriate industry standards.

NEMA Standard 3-5-1990.

36.7 SERVICE CONDITIONS

If the structure is required to be galvanized, it shall be galvanized in accordance with the latest revision of ASTM Specification A 123. For fabricated tubular structures, reference should also be made to ASTM Specification A 386.

NEMA Standard 3-5-1990.

36.8 ALUMINUM AND DISSIMILAR MATERIALS

When aluminum is to be placed in contact with or fastened to steel or other dissimilar materials, the following is recommended.

36.8.1 Steel

Aluminum surfaces to be placed in contact with steel should be given one coat of a zinc chromate primer complying with Federal Specification TT-P-645, or the equivalent, or one coat of a suitable nonhardening joint compound which is capable of excluding moisture from the joint during prolonged service. Additional protection can be obtained by applying the joint compound in addition to the zinc chromate primer. The zinc chromate paint should be allowed to dry to hardness before the parts are assembled.

Aluminum surfaces to be placed in contact with stainless, aluminized, hot-dip-galvanized or electro-galvanized steel need not be treated.

Steel surfaces to be placed in contact with aluminum should be painted with a good quality priming paint, such as a red lead primer complying with Federal Specification TT-P-86B or a zinc chromate primer complying with Federal Specification TT-P-645, followed by one coat of paint consisting of 2 pounds of aluminum paste pigment complying with ASTM Specification D 962 (Type 2, Class B) per gallon of varnish meeting Federal Specification TT-V-81F (Type 2 or the equivalent). Stainless, aluminized, hot-dip-galvanized and electro-galvanized steel surfaces to be placed in contact with aluminum need not be painted.

36.8.2 Wood

Aluminum surfaces to be placed in contact with wood should be given a heavy coat of an alkali-resistant bituminous paint before installation. The paint should be applied in the condition in which it is received from the manufacturer without the addition of any thinner.

Copyright National Electrical Manufacturers Association
Provided by IHS under license with NEMA
No reproduction or networking permitted without license from IHS
Not for Resale

36.8.3 Concrete

Where the surface of concrete in contact with aluminum is subjected to moisture entrapment, the aluminum surface should be treated at the installation site as specified in 36.8.2.

Authorized Engineering Information 3-5-1990.

36.9 FOUNDATIONS

36.9.1 General

Proper provisions should be made to transmit the forces to the foundations of the structure. The forces to be transmitted are bearing, uplifting shear, and overturning moment. The foundations should be designed to prevent overturning under maximum loads and should have a safety factor of at least 1.5.

36.9.2 Earth Values

Soil conditions should be investigated before the foundations are designed. The following earth pressure should be used in the absence of definite information as to soil values.

Earth should be assumed to weigh 90 pounds per cubic foot (1442 kg/m^3) and, if the foundation is of a suitable design, its weight may be used to resist overturning or uplift. The shearing values or cohesive strength should be considered. Earth pressure should not exceed 4000 pounds per square foot (192 KPa) unless otherwise specified.

36.9.3 Anchor Bolts

Anchor bolts are usually supplied as a part of the structure. Foundation designs and foundations are usually furnished by others.

Anchor bolts should be designed to provide resistance to all conditions of tension and shear at the bases of columns. The allowable stress and safety factors should be in accordance with the American Institute for Steel Construction.

Authorized Engineering Information 3-5-1990.

36.10 DETAILING AND FABRICATION

36.10.1 Straightening

All members which are bent or out of line after fabrication shall be carefully straightened without mutilating the material or its finish. H-beam and similar members shall have distortions limited to 1/200 of their length, and chord angles and similar members shall have distortions limited to 1/100 of their length.

36.10.2 Bolt Length

Bolts shall be of sufficient length to assure full thread engagement of the nut.

36.10.3 Welding

The welding requirements and techniques recommended by the American Institute of Steel Construction and the Aluminum Association shall be followed in the fabrication of all welded members.

NEMA Standard 3-5-1990

Materials other than steel and aluminum should be joined in accordance with the appropriate industry standards.

Authorized Engineering Information 3-5-1990.

36.10.4 Erection Marks

All members shall be clearly marked to provide easy identification in the field. Markings shall be durable in nature and shall agree with erection drawings for each substation.

36.10.5 Erection Drawings

Erection drawings shall identify the class of the structure as either class A or class B (36.10B).

36.10.6 Bolt Spacing

The minimum spacing of bolts shall be as follows:
1 5/8 inches (41.3 mm) for 5/8-inch-diameter bolts,
1 7/8 inches (47.6 mm) for 3/4-inch-diameter bolts,
2 1/4 inches (57.2 mm) for 7/8-inch-diameter bolts,
2 5/8 inches (66.7 mm) for 1-inch-diameter bolts.

NEMA Standard 3-5-1990.

36.11 MISCELLANEOUS

36.11.1 Shipping

All structures should be shipped completely "knocked down" unless otherwise specified. All sections should be properly prepared for shipment so that no damage will result during transit.

Bolts and other similar material should be shipped in boxes or other suitable containers. When shipment is made, care must be exercised to include all parts required for the complete structure.

36.11.2 Field Erection

Since the structural substation design reflects a high degree of engineering skill, substation manufacturers should be consulted before any changes in the design of the structure are made during erection.

36.11.3 Other Design Guides

For additional substation design information, refer to Rural Electrification Administration Bulletin 65-1, *Design Guide for Rural Substations,* and IEEE document 605, *Guide for Design of Substation Rigid-Bus Structures.*

Authorized Engineering Information 3-5-1990.

Copyright National Electrical Manufacturers Association
Provided by IHS under license with NEMA
No reproduction or networking permitted without license from IHS

Not for Resale

APPENDIX A
Tables of Electrical, Mechanical, and Physical Characteristics of Indoor Porcelain Insulators

Table 1—Electrical and Mechanical Characteristics of Indoor Insulator Units

Table 2—Physical Characteristics of Indoor Insulators, Class A

Table 3—Physical Characteristics of Indoor Insulators, Class B

Table 4—Physical Characteristics of Indoor Insulators, Class II

Copyright National Electrical Manufacturers Association
Provided by IHS under license with NEMA
No reproduction or networking permitted without license from IHS
Not for Resale

Copyright National Electrical Manufacturers Association
Provided by IHS under license with NEMA
No reproduction or networking permitted without license from IHS

Table 1
ELECTRICAL AND MECHANICAL CHARACTERISTICS OF INDOOR INSULATOR UNITS

Maximum Voltage Rating, kV	Withstand Test Voltage, kV			Strength Class 10 (Strength, Pounds)				Strength Class 20 (Strength, Pounds)			
	Impulse†	Low Frequency, Dry, 1 Min.	Dew, 10 sec.	Cantilever‡	Torsion, Inch-pounds	Tension	Compression	Cantilever‡	Torsion, inch-pounds	Tension	Compression
2.5	45	15	10	750	1500	1500	10000	...	...	...	...
5.1	60	19	15	750	1500	1500	10000	1000	2500	2000	20000
8.3	75	26	24	750	1500	1500	10000	1500	3500	3000	20000
15.0	95	36	26	...	...	...	...	1250	3500	3000	20000
15.5	110	50	30	...	...	...	...	1000	3500	3000	20000
25.8	150	60	40	...	...	...	...	...	...	...	...
38*	200	80	...	...	...	...	...	...	...	...	...

Maximum Voltage Rating, kV	Strength Class 30 (Strength, Pounds)				Strength Class 40 (Strength, Pounds)				Strength Class 50 (Strength, Pounds)			
	Cantilever‡	Torsion, Inch-pounds	Tension	Compression	Cantilever‡	Torsion, Inch-pounds	Tension	Compression	Cantilever‡	Torsion, Inch-pounds	Tension	Compression
2.54	...	...	...	...	...	...	...	...	...	...	...	...
5.08	2000	4500	3500	30000	...	...	...	...	...	...	...	...
8.25	3000	6000	5000	30000	6000	10000	8000	50000	12000	15000	12000	80000
15.0	2500	6000	5000	30000	5000	10000	8000	50000	10000	15000	12000	80000
15.5	2000	6000	5000	30000	4000	10000	8000	50000	8000	15000	12000	80000
25.8	1500	6000	5000	30000	3000	10000	8000	50000	6000	15000	12000	80000
38*	1250	6000	5000	30000	2500	10000	8000	50000	5000	15000	12000	80000

*The 38-kV insulator units are for bus supports and front-connected devices only.
†Impulse withstand test voltage with 1.5×40 wave, positive and negative.
‡Cantilever strength ratings are given 2½ inches above cap.
NOTE: For physical characteristics, see Tables 2, 3, and 4 of this Appendix.

Not for Resale

NEMA SG*1 90 ■ 9470247 0020526 7 ■

Copyright National Electrical Manufacturers Association
Provided by IHS under license with NEMA
No reproduction or networking permitted without license from IHS
Not for Resale

Table 2
PHYSICAL CHARACTERISTICS OF INDOOR INSULATORS, CLASS A

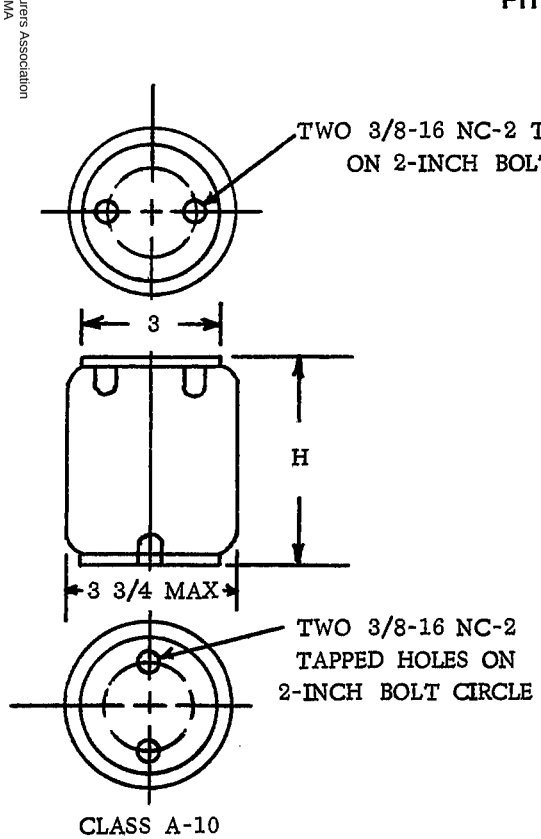

CLASS A-10

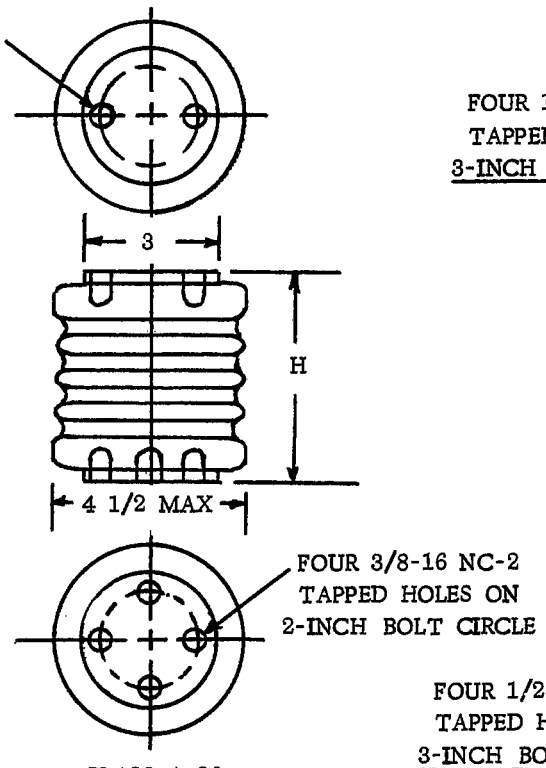

CLASS A-20

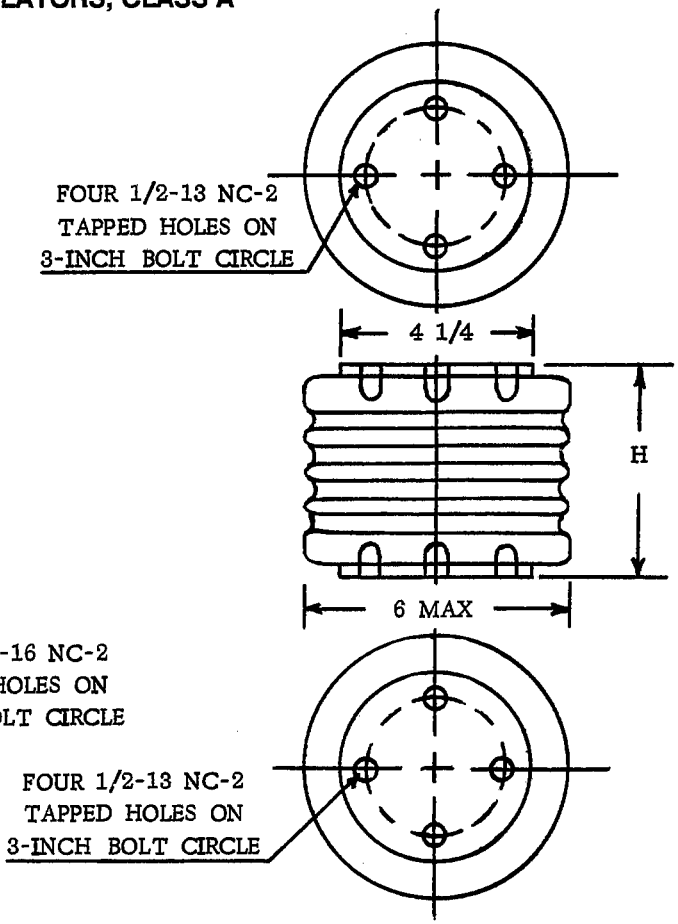

CLASS A-30

kV	Dimension H, inches		
	Class A-10	Class A-20	Class A-30
2.5	2½	...	...
5.1	3½	3½	3½
8.3	4½	4½	4½
15.0	...	6	6
15.5	...	7½	7½
25.8	...	...	10½
38.0	...	...	15

All dimensions in inches.

NOTE I—The minimum depth of usable threads in tapped holes shall be equal to the thread diameter + 1/8 inch.

NOTE II—Additional center bolt hole and its size are optional.

Copyright National Electrical Manufacturers Association
Provided by IHS under license with NEMA
No reproduction or networking permitted without license from IHS
Not for Resale

Table 3
PHYSICAL CHARACTERISTICS OF INDOOR INSULATORS, CLASS B

kV	Dimension H, inches	
	Class B-20	Class B-30
4.8	5	...
8.3	6	6
15.0	7½	7½
15.5	9	9
25.8	...	12
38.0	...	16½

NOTE I—The minimum depth of usable threads in tapped holes shall be equal to the thread diameter + 1/8 inch.

NOTE II—The additional four holes shown by dotted lines are optional.

All dimensions in inches.

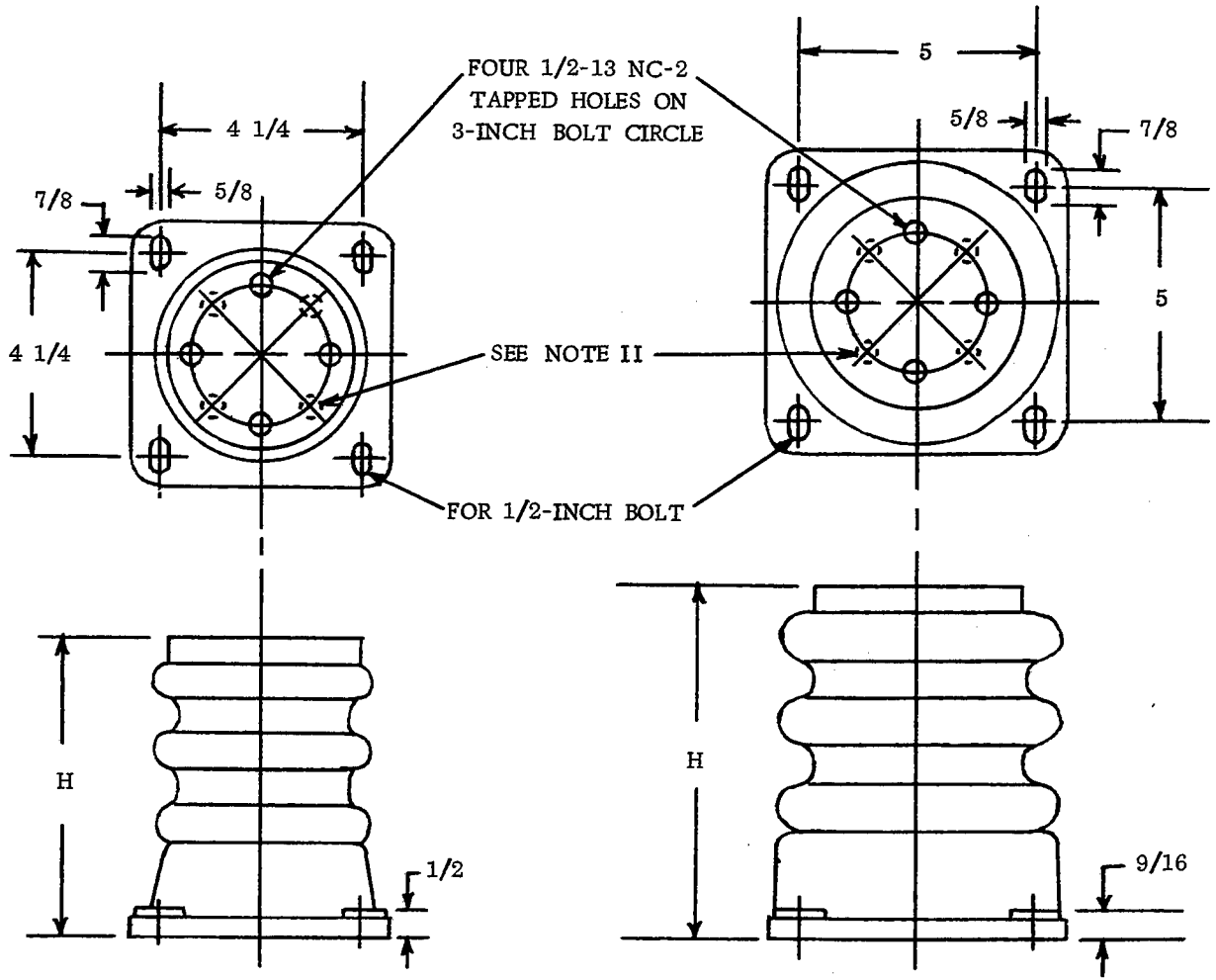

CLASS B-20

CLASS B-30

Table 4
PHYSICAL CHARACTERISTICS OF INDOOR INSULATORS, CLASS II

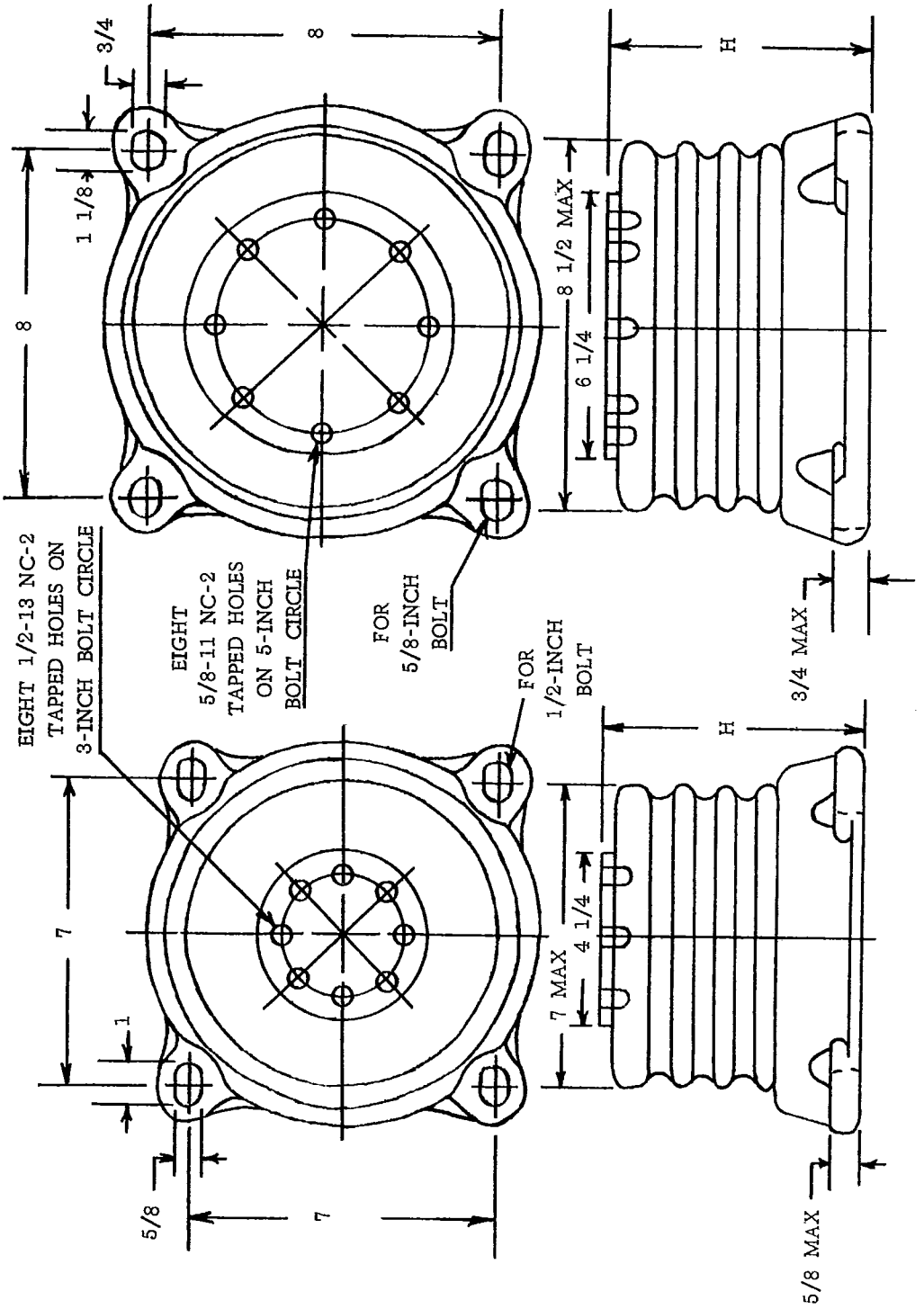

kV	Dimension H, inches
8.3	6
15.0	7½
15.5	9
25.8	12
38.0	16½

NOTE—The minimum depth of usable threads in tapped holes shall be equal to the thread diameter + 1/8 inch.

All dimensions in inches.

Copyright National Electrical Manufacturers Association
Provided by IHS under license with NEMA
No reproduction or networking permitted without license from IHS

Not for Resale

NEMA STANDARDIZATION

The purpose of NEMA Standards, their classification and status, are set forth in certain clauses of the NEMA *Standardization Policies and Procedures* manual and are referenced below.

Purpose of Standards

National Electrical Manufacturers Association standards are adopted in the public interest and are designed to eliminate misunderstandings between the manufacturer and the purchaser and to assist purchasers in selecting and obtaining the proper product for their particular needs. Existence of a National Electrical Manufacturers Association standard does not in any respect preclude any member or nonmember from manufacturing or selling products not conforming to the standard. *(Standardization Policies and Procedures, p. 1)*

Definition of a Standard

A standard of the National Electrical Manufacturers Association defines a product, process, or procedure with reference to one or more of the following: nomenclature, composition, construction, dimensions, tolerances, safety, operating characteristics, performance, rating, testing, and the service for which they are designed.

(Standardization Policies and Procedures, p. 2)

Dimensions

Where dimensions are given for interchangeability purposes, alternate dimensions satisfying the other provisions of the Standards Publication may be capable of otherwise equivalent performance.

(Standardization Policies and Procedures, p.8)

Categories of Standards

National Electrical Manufacturers Association Standards are of three classes:

1. NEMA Standard, which relates to a product, process, or procedure commercially standardized and subject to repetitive manufacture, which standard has been approved by at least 90 percent of the members of the Subdivision eligible to vote thereon;
2. Suggested Standard for Future Design, which may not have been regularly applied to a commercial product, but which suggests a sound engineering approach to future development, which standard has been approved by at least two-thirds of the members of the Subdivision eligible to vote thereon.
3. Adoptive Standard, which is adopted in whole or in part from the standards of another organization, either domestic, regional, or international.

(Standardization Policies and Procedures, pp. 7 & 16)

Authorized Engineering Information

Authorized Engineering Information consists of explanatory data and other engineering information of an informative character not falling within the classification of NEMA Standard or Suggested Standard for Future Design, which standard has been approved by at least two-thirds of the members of the Subdivision eligible to vote on the standard.

(Standardization Policies and Procedures, pp. 7 & 16)

Official Standards Proposal

An Official Standards Proposal is an official draft of a proposed standard which is formally recommended to an outside organization(s) for consideration, comment, and/or approval, and which has been approved by at least 90 percent of the members of the Subdivision eligible to vote thereon.

(Standardization Policies and Procedures, pp. 7 & 16)

Identification of Status

Standards in NEMA Standards Publications are identified in the foreword or following each standard as "NEMA Standard" or "Suggested Standard for Future Design." These indicate the status of the standard. These words are followed by a date which indicates when the standard was adopted in its present form by the Association.

The material identified as "Authorized Engineering Information" and "Official Standards Proposal" is designated similarly.

Copyright National Electrical Manufacturers Association
Provided by IHS under license with NEMA
No reproduction or networking permitted without license from IHS
Not for Resale

Outdoor High Voltage Switches Voting Classification
of the
SWITCHGEAR SECTION
of the
NATIONAL ELECTRICAL MANUFACTURERS ASSOCIATION

MEMBER COMPANIES

A.B. Chance Company
Centralia, MO 65240

Cooper Power Systems
Olean, NY 14670

Kearney
Division of Kearney-National, Inc.
Atlanta, GA 30359

Power Controls, Inc.
Commerce, CA 90040

Powercon Corporation
Severn, MD 21144

The Pringle Electrical Manufacturing Company
Fort Washington, PA 19034

Siemens Energy & Automation, Inc.
Jackson, MS 39208

USCO Power Equipment Corporation
Birmingham, AL 35202

Westinghouse Electric Corporation
Pittsburgh, PA 15220

Copyright National Electrical Manufacturers Association
Provided by IHS under license with NEMA
No reproduction or networking permitted without license from IHS
Not for Resale