SG 6

Power Switching Equipment

Copyright National Electrical Manufacturers Association
Provided by IHS under license with NEMA
No reproduction or networking permitted without license from IHS
Not for Resale

Copyright National Electrical Manufacturers Association
Provided by IHS under license with NEMA
No reproduction or networking permitted without license from IHS
Not for Resale

NEMA Standards Publication No. SG 6-2000

Power Switching Equipment

Published by

National Electrical Manufacturers Association
1300 N. 17th Street, Suite 1847
Rosslyn, Virginia 22209

© Copyright 2001 by the National Electrical Manufacturers Association. All rights including translation into other languages, reserved under the Universal Copyright Convention, the Berne Convention for the Protection of Literary and Artistic Works, and the International and Pan American Copyright Conventions.

--`,,`-`-`,,`,,`,`,,`---

Copyright National Electrical Manufacturers Association
Provided by IHS under license with NEMA
No reproduction or networking permitted without license from IHS

Not for Resale

Copyright National Electrical Manufacturers Association
Provided by IHS under license with NEMA
No reproduction or networking permitted without license from IHS
Not for Resale

TABLE OF CONTENTS

Foreword ii

Section 1 GENERAL 1

Section 30 DEFINITIONS AND REQUIREMENTS FOR HIGH-VOLTAGE AIR SWITCHES, INSULATORS, AND BUS SUPPORTS 4

Section 31 APPARATUS INSULATORS FOR USE WITH HIGH-VOLTAGE AIR SWITCHES 4

Section 32 SCHEDULES OF PREFERRED RATINGS, CONSTRUCTION GUIDELINES, AND SPECIFICATIONS FOR HIGH-VOLTAGE AIR SWITCHES, BUS SUPPORTS, AND SWITCH ACCESSORIES 4

Section 33 RATED CONTROL VOLTAGES AND THEIR RANGES FOR HIGH-VOLTAGE AIR SWITCHES 4

Section 34 TEST CODE FOR HIGH-VOLTAGE AIR SWITCHES 4

Section 35 GUIDE FOR THE INSTALLATION, OPERATION, AND MAINTENANCE OF POWER SWITCHING EQUIPMENT 4

Section 36 OUTDOOR SUBSTATIONS (Structure, Pole-top Frames, and Other Parameters) 6

Appendix A TABLES OF ELECTRICAL, MECHANICAL, AND PHYSICAL CHARACTERISTICS OF INDOOR PORCELAIN INSULATORS A-1

--`,,`-`-`,,`,,`,`,,`---

Copyright National Electrical Manufacturers Association
Provided by IHS under license with NEMA
No reproduction or networking permitted without license from IHS

Not for Resale

Foreword

This is one of two NEMA standards publications covering the range of low- to high-voltage switchgear products. (SG 4-1990 is entitled *Alternating-Current High-Voltage Circuit Breaker*.) Such products are generally applied to utility and industrial use with a portion going to commercial applications. User and general interest input played a significant part in the development of the product requirements carried by this publication. It, as well as other NEMA standards publications, is not intended to stand alone for without exception:

a. It adopts by reference the appropriate American National Standards (approved by Accredited Standards Committee C37, Power Switchgear) as the main body of this NEMA publication.
b. It offers a vehicle for getting into print the proposed NEMA revisions of the pertinent C37 standards, until such time as those revisions can be evaluated, approved, and published as a revision of the particular American National Standard.
c. It covers additional information about a product of specific interest to the manufacturing community, which the ANSI Standards Committee does not include in its scope.

Within this NEMA publication, therefore, the main focus is on American National Standards and the consensus method of standards approval used by ANSI.

Switchgear standards are, for the most part, developed through the combined and separate efforts of the Institute of Electrical and Electronics Engineers, Electric Light and Power, and the National Electrical Manufacturers Association. Accredited Standards Committee C37 serves as the administrator through which are channeled all switchgear proposals intended for eventual publication as American National Standards. It is within these organizations that the principal manufacturer-user exchange is accomplished. This exposes product requirements to those people having the direct responsibility for the use, design, application, maintenance, and acceptance of the products and thus assures an objective and critical review within the voluntary standards program.

The standards in this publication are periodically reviewed by the Power Switching Equipment Voting Classification of the Switchgear Section of NEMA for any revisions necessary to keep them up-to-date with advancing technology. Proposed or recommended revisions should be submitted to:

Vice President, Engineering
National Electrical Manufacturers Association
1300 N. 17th Street, Suite 1847
Rosslyn, Virginia 22209

This standards publication was developed by the Switchgear Section. Section approval of the standard does not necessarily imply that all section members voted for its approval or participated in its development. At the time it was approved, the section was composed of the following members:

ABB Power Distribution—Sanford, FL
A B Chance Company—Centralia, MO
Cooper Power Systems—Waukesha, WI
Kearney—Atlanta, GA
Powercon Corporation—Severn, MD
S&C Electric Company—Chicago, IL
Siemens Energy & Automation, Inc.—Jackson, MS
USCO Power Equipment Corporation—Birmingham, AL

The standards or guidelines presented in a NEMA standards publication are considered technically sound at the time they are approved for publication. They are not a substitute for a product seller's or user's own judgment with respect to the particular product referenced in the standard or guideline, and NEMA does not undertake to guarantee the performance of any individual manufacturer's products by virtue of this standard or guide. Thus, NEMA expressly disclaims any responsibility for damages arising from the use, application, or reliance by others on the information contained in these standards or guidelines.

Copyright National Electrical Manufacturers Association
Provided by IHS under license with NEMA
No reproduction or networking permitted without license from IHS
Not for Resale

Section 1
GENERAL

1.1 SCOPE

The Outdoor High-Voltage Switches (8-SG-VI) voting classification includes the following:

a. Power switching equipment rated above 1000 volts AC and 3200 volts DC
b. Grounding switches
c. Group-operated multipole horn-gap and disconnecting switches
d. Hook-operated disconnecting switches
e. Interrupter switches

Excluded from this scope are the following:

a. Porcelain-housed hook operated disconnecting switches
b. Insulator unit adapters and fittings for equipment in this scope
c. Oil-immersed disconnecting switches
d. Switch hooks or sticks
e. Indoor insulator units and accessories
f. Interlocks, auxiliary switches, and accessories designed with or for equipment in this scope
g. Crossarms, buck arms, and pole-top frames used as switch mountings, either steel or aluminum
h. Outdoor stations-structures of steel, aluminum, or wood
i. Renewal and spare parts designed exclusively for use in the products enumerated above and not included in the scope of some other subdivision

NOTE— Excluded from this scope are outdoor insulator units when sold separately, since they fall within the scope of the High Voltage Insulator Section.

Also excluded from this product scope of this voting classification are all products falling within the product scope of the voting classification when assembled in complete switchgear equipment. These fall within the product scope of the Power Switchgear Assemblies Voting Classification (8-SG-V).

1.2 REFERENCED STANDARDS

In this standard reference is made to the following publications. Copies are available from the sources indicated.

Aluminum Association
900 19th Street, N.W.
Washington, DC 20006

ASD 1-1997 *Aluminum Standards and Data*

TH 56-1989 *Aluminum Electrical Conductor Handbook*

ADM 1-1994 *Aluminum Design Manual*

Copyright National Electrical Manufacturers Association
Provided by IHS under license with NEMA
No reproduction or networking permitted without license from IHS
Not for Resale

American Institute of Steel Construction, Inc.
400 N. Michigan Avenue
Wrigley Building, 8th Floor
Chicago, IL 60611

AISC M01-80 *Manual of Steel Construction*

American National Standards Institute
11 West 42nd Street
New York, NY 10036

ANSI/IEEE C37.30-1993 *Definitions and Requirements for High-Voltage Air Switches, Insulators, and Bus Supports*

ANSI/IEEE C37.34-1994 *Test Code for High-Voltage Air Switches*

ANSI/IEEE C37.100-1992 *Definitions for Power Switchgear*

ANSI C2-1993 *National Electrical Safety Code*

ANSI C29.1-1988 *Test Methods for Electrical Power Insulators*

ANSI C29.8-1985 *Wet-Process Porcelain Insulators (Apparatus, Cap, and Pin Type)*

ANSI C29.9-1983 (R1991) *Wet-Process Porcelain Insulators (Apparatus, Post Type)*

ANSI C37.32-1996 *Schedules of Preferred Ratings, Manufacturing Specifications, and Application Guide for High-Voltage Air Switches, Bus Supports, and Switch Accessories.*

ANSI C37.35-1996 *Guide for the Application, Installation, Operation, and Maintenance of High-Voltage Air Disconnecting and Load Interrupter Switches*

IEEE 1247-1998 *Standard for Interrupter Switches for Alternating Current, Rated Above 1000 Volts*

American Society for Testing and Materials
1916 Race Street
Philadelphia, PA 19103

A36/A36M-87 *Specification for Structural Steel*

A123 REV A-89 *Standard Specification for Zinc (Hot-Dip Galvanized) Coatings on Iron and Steel Products*

A283/A283M-88 *Standard Specification for Low and Intermediate Tensile Strength Carbon Steel Plates*

A394-87 *Specification for Zinc Coated Steel Transmission Tower Bolts*

A663-85 *Specification for Steel Bars, Carbon, Merchant Quality Mechanical Properties*

Copyright National Electrical Manufacturers Association
Provided by IHS under license with NEMA
No reproduction or networking permitted without license from IHS
Not for Resale

A675/A675M-89 *Standard Specification for Steel Bars, Carbon, Hot-Wrought, Special Quality, Mechanical Properties*

B188-88 *Specification for Seamless Copper Bus, Pipe, and Tube*

D962-81 *Specification for Aluminum Pigments, Powder, and Paste for Paints*

American Society of Civil Engineers
345 East 47th Street
New York, NY 10017

Proceedings of the American Society of Civil Engineers, "Suggested Specifications for Structure of Aluminum Alloys 6061-T6 and 6062-T6

General Services Administration
Specifications Section, Room 6654
Washington, DC 20407

TT-P-645 *Primer, Paint, Zinc-Chromate, Alkyd Type*

TT-V-81F *Varnish, Mixing for Aluminum Paint*

Institute of Electrical and Electronics Engineers
445 Hoes Lane
Piscataway, NJ 08855

142-1982 *Recommended Practice for Grounding for Industrial and Commercial Power Systems*

605-1998 *Guide for Design of Substation Rigid-Bus Structure*

1247-1998 *Standard for Interrupter Switches for Alternating Current, Rated Above 1000 volts*

National Electrical Manufacturers Association
1300 N. 17th Street, Suite 1847
Rosslyn, Virginia 22209

107-1987(R1993) *Methods of Measurement of Radio Influence Voltage of High-Voltage Apparatus*

Rural Utilities Service
1400 Independence Avenue, S.W.
Washington, DC 20250

Bulletin 65-1 *Design Guide for Rural Substations*

--`,,`-`-`,,`,,`,`,,`---

Copyright National Electrical Manufacturers Association
Provided by IHS under license with NEMA
No reproduction or networking permitted without license from IHS
Not for Resale

Section 30
DEFINITIONS AND REQUIREMENTS FOR HIGH-VOLTAGE AIR SWITCHES, INSULATORS, AND BUS SUPPORTS

The ANSI/IEEE standards C37.30 and C37.100 have been approved by NEMA and constitute Section 30 of this publication.

Section 31
APPARATUS INSULATORS FOR USE WITH HIGH-VOLTAGE AIR SWITCHES

The ANSI standards C29.1, C29.8, and C29.9 constitute Section 31 of this publication covering outdoor insulators. Electrical and mechanical characteristics of indoor porcelain insulators are shown in Tables 1 through 4 of Appendix A.

Section 32
SCHEDULES OF PREFERRED RATINGS, CONSTRUCTION GUIDELINES, AND SPECIFICATIONS FOR HIGH-VOLTAGE AIR SWITCHES, BUS SUPPORTS, AND SWITCH ACCESSORIES

The ANSI standard C37.32 has been approved by NEMA and constitutes Section 32 of this publication.

Section 33
RATED CONTROL VOLTAGES AND THEIR RANGES FOR HIGH-VOLTAGE AIR SWITCHES

ANSI C37.33 has been incorporated in ANSI C37.32. The ANSI standard C37.32 has been approved by NEMA and constitutes Section 33 of this publication.

Section 34
TEST CODE FOR HIGH-VOLTAGE AIR SWITCHES

The ANSI/IEEE Standard C37.34 has been approved by NEMA and constitutes Section 34 of this publication. Refer to IEEE 1247 for Test Code on Interrupter Switches.

Section 35
GUIDE FOR THE INSTALLATION, OPERATION, AND MAINTENANCE OF POWER SWITCHING EQUIPMENT

35.1 APPLICABLE AMERICAN NATIONAL STANDARDS

ANSI C37.35 has been approved by NEMA for inclusion in Section 35.

Copyright National Electrical Manufacturers Association
Provided by IHS under license with NEMA
No reproduction or networking permitted without license from IHS
Not for Resale

35.2 ADDITIONAL INFORMATION: RECEIPT AND PREPARATION OF INSTALLATION

35.2.1 Preparation of Structure

a. Location

Consideration should be given to the location of the structure relative to smoke, dirt, and fumes. It is desirable to locate the structure in a place as free from such conditions as possible as they may cause rapid deterioration of the conductors and contact joints, corrode parts, cause parts to make imperfect contact, and reduce the flashover value of the insulation.

b. Foundations

Foundations should be carefully prepared and of sufficient size, depth, and strength to adequately withstand all possible strains that the structure may be required to meet.

c. Plumbing and Alignment

It is important that the structure be carefully plumbed and aligned; otherwise the equipment may not line up properly and, in addition to bad appearance, might cause difficulties in mounting and operating.

d. Weatherproofing

Switching equipment parts have non-corrosive or weather-resistant finishes adequate for the conditions under which the equipment is to be used. It is recommended that the structure be weatherproofed to withstand the elements to the same degree as the equipment.

Rust deposits from the structure may result in failure of the insulators or loosening of the structure, which might become sufficiently flexible to interfere with the satisfactory operation of the equipment.

35.2.2 Erection of Equipment

a. Placing Equipment

Equipment should be so placed as to provide ready access for operation. Hook-operated switches should be so placed that they are safely operable by means of a switch hook without causing the operator to get too near to live parts, lines, buses, or insulators.

b. Line Dead-ending

Incoming or outgoing lines or conductors on which there is any appreciable strain should be provided with adequate strain-type insulating supports in order to remove from the switching equipment any undue strains that might cause poor contact or throw the equipment out of proper alignment.

Lines should be anchored to the structure or nearby poles or towers. If lines are anchored to towers, they should be arranged for direct strains and should not twist the tower and throw the bases of equipment out of line.

If wood poles and wood crossarms are used for the lines, it is recommended, in general, that the insulators on steel structures to which such lines are connected be provided with a higher factor of safety than the line insulators. Where steel poles or towers are used, this factor of safety is not so essential unless the station is subject to fumes, smoke, or other dirt.

c. Bus Conductors

It is important that the bus arrangements that make use of strain-type insulation have sufficient rigidity. Because of the physical dimensions of the structure, such conductors should be under sufficient tension to prevent excessive swaying.

Copyright National Electrical Manufacturers Association
Provided by IHS under license with NEMA
No reproduction or networking permitted without license from IHS
Not for Resale

Conductors should be run as nearly as possible in straight lines and should be supported sufficiently to withstand the mechanical load and magnetic stresses.

Expansion and contractions of conductors due to temperature changes may develop heavy stresses on the supporting insulators and connected equipment. In long heavy bus structures, care should therefore be taken to see that means are provided to allow for expansion. The importance of this provision depends upon the length of the conductors and the possible temperature variations.

The cantilever strength of conductor supports is becoming an increasingly important factor due to the weight of buses and to electromagnetic stresses under short circuit. For this reason, the height of bus supports should be kept to a minimum consistent with the full flashover value of the porcelain body.

On alternating-current conductors, the conductor clamps should not form a closed magnetic circuit around the conductor.

Section 36
OUTDOOR SUBSTATIONS
(Structure, Pole-top Frames, and Other Parameters)

36.1 SCOPE

This standard establishes major design parameters (such as load, clearances, and materials) for outdoor substations.

36.2 REFERENCES

The following publications have content relevant to substation design. If the publications have been superseded with an approved revision, the revision shall apply.

ANSI C2-1999	*American National Electrical Safety Code*
ASCE 7-98-1998	*Minimum Design Loads for Buildings and Other Structures*
IEEE Standard 605-1998	*IEEE Guide for Design of Substation Rigid-Bus Structures*
Bulletin 65-1	*Rural Utilities Service (RUS) Design Guide for Rural Substations*

36.3 DEFINITIONS

36.3.1 Outdoor Substation

An outdoor substation is an open type of structure for supporting high-voltage air-insulated power equipment.

36.3.2 Classes of Structures

Substation structures shall be of one of the following classes:

a. Class “A” Structures
Class “A” structures are those intended for the support of high-voltage equipment (i.e., air switches, interrupter switches, and circuit interrupting devices).

Copyright National Electrical Manufacturers Association
Provided by IHS under license with NEMA
No reproduction or networking permitted without license from IHS
Not for Resale

b. Class “B” Structures
Class “B” structures are those on which the deflections within the limits do not affect the performance of supported equipment (i.e., dead end structures, bus supports, and miscellaneous equipment supports).

36.3.3 Span

Span is the distance between supporting members or the length of cantilever.

36.3.4 Bent

A bent consists of one or more horizontal members supported by two or more columns effectively all in one vertical plane. It includes any bracing between these members.

36.4 GENERAL RECOMMENDATION

Recognition should be given to four essential points that characterize structures for outdoor substations.

36.4.1 Accuracy and Performance

Structures should be accurately fabricated to facilitate erection. Specific consideration should be given to prevent damage to protective coating required by certain materials.

36.4.2 Rigidity

Consideration should be given to providing sufficient rigidity so that all equipment, such as air switches, interrupter switches, and circuit interrupting devices, will operate properly so that deflections of members will not exceed the limits specified by the equipment manufacturer.

36.4.3 Erection

Outdoor substations are frequently erected by persons with varied levels of experience as structural erectors. This calls for great detail and clarity in drawings, accuracy in fabrications, and care in marking the structural components.

36.4.4 Design

Frequently it is necessary to deviate from conventional practices in structural design in order to provide electrical and mechanical clearance or to prevent interference from switch operating mechanisms.

36.5 MATERIALS*

The following materials are those which are most commonly used in outdoor substations.

*Additional information on referenced materials may be obtained from the sources listed in Section 1.

36.5.1 Steel

The physical properties of steel should be at least those of ASTM Specification A36/A36M and for steel bolts at least those of ASTM A394.

36.5.2 Aluminum

For structural members, the physical properties should be at least those of Aluminum Alloy 6061-T6 and for bolts those of Aluminum Alloy 2024-T3. For bus conductors, the physical properties should be at least those of Aluminum Alloy 6063-T6.

36.5.3 Copper

For bus conductors, copper pipe meeting the requirements of ASTM Specification B188 is commonly used; square copper bar and square tubing are also used.

--`,,`,,`-`-`,,`,,`,`,,`---

Copyright National Electrical Manufacturers Association
Provided by IHS under license with NEMA
No reproduction or networking permitted without license from IHS
Not for Resale

36.5.4 Wood

Wood is a natural material with variable characteristics. If used as structure members, it should be carefully selected not only as to the type of wood but also to grain, condition, presence of defects, and such. The types of wood most frequently used in substation constructions are western red cedar and southern yellow pine. Proper treatment of wooden structural members usually enhances their curability.

36.6 LOADING

Structures should be designed to withstand apparatus loads, dead loads, wind loads, snow and ice loads, other specified loads, and unusual service conditions. The apparatus manufacturer should be consulted with respect to specific loads and unusual service conditions.

36.6.1 Apparatus Loads

Apparatus loads (including conductors) consist of the following:

a. Static Loads
1. Weight of the apparatus
2. Conductor weight (not line tension)

b. Operating and Dynamic Loads
1. Friction forces, moments, and torques due to mechanical operation of apparatus such as air switches and grounding switches
2. Dynamic forces, moments, and torques due to accelerating loads of high-speed circuit-interrupting devices when specified
3. Magnetic forces due to short-circuit current

36.6.2 Dead Loads

Dead loads consist of the weight of the structure and line tensions. If strain conductors and static lines are used, the strain load per conductor and line shall be specified by the user. When not specified, the strain load shall be assumed to be 1500 pounds (6672 N) per conductor in a direction of 15 degrees from normal to the face of the structure.

36.6.3 Wind Loads

Wind load on the structure and apparatus mounted thereon shall be assumed to be 25 pounds per square foot (1197 Pa) of the vertical projection of the structural members for the first bent. [This is based on an approximate 77.2 mph (34.5 m/s).]

For any successive bents, the wind pressure will be reduced in proportion to the shade factor “K” as defined by the following equation:

$$K = \frac{L}{4W} \leq 1$$

Where:
L = Distance from front of the first bent to front of the following bent, in feet
W = The least dimension perpendicular to the wind direction in feet

It is assumed that shading is ineffective at a distance greater than 4W and that full wind pressure is applied to the next bent; therefore, K will be equal to 1 when the distance between following bents is equal to or greater than 4W, and will be less than 1 only when the distance is less than 4W.

For lattice towers, lattice box columns, and trusses, the exposed area shall be assumed to be 1-1/2 times the total exposed area of the component members.

Copyright National Electrical Manufacturers Association
Provided by IHS under license with NEMA
No reproduction or networking permitted without license from IHS
Not for Resale

When a wind load other than 25 pounds per square foot (1197 PA) is used, the following formulas shall be used for evaluating the static wind pressure:

a. On flat surfaces, $P = 0.0042\ V^2$ lbs./sq. ft.
b. On cylindrical surfaces, $P = 0.0026\ V^2$
c. On octagonal surfaces, $P = 0.0034\ V^2$

Where:

P = Pressure in pounds per square foot of projected area
V = Wind velocity in miles per hour

36.6.4 Ice Loads

Structures shall be designed to withstand ice loading on apparatus conductors and the structure itself, as dictated by geographical location.

The degree of loading due to ice shall be considered as light, medium, or heavy in accordance with the geographical areas shown in the loading map in ANSI C2, Part 2, Section 250, and shall be calculated in accordance with Table 36-1. Ice weighs 57 pounds per cubic foot (913 kg/m); as a general guide, no ice is equivalent to light load, 1/4 inch of ice to medium load, and 1/2 inch of ice to heavy load.

36.7 DEFLECTIONS

For the purpose of this standard, deflection is defined as the deviation of a structural member from its intended theoretical design position to its actual position under maximum loading conditions.

The following deflection limits shall apply when the structure is under a set of compatible loads consisting of apparatus loads, dead load, wire loads, ice loads, and wind loads (described in 36.4) without short-circuit forces, unless it is specified that all forces shall act simultaneously.

NOTE—Very often high wind loads do not occur simultaneously with heavy ice conditions or with the highest wire tension. (This note is approved as Authorized Engineering Information.)

Table 36-1
ICE LOADING

Ice Thickness, inches	Ice Load as Percent of Weight as Lattice Structures		Ice Load in Pounds for All Other Structures (Including Conductors) and Materials	Ice Load as Percent of Weight of Apparatus*
	Steel	Aluminum		
1/4	25	75	1.2 x ice area in sq. ft.	25
1/2	50	150	2.4 x ice area in sq. ft.	50

* Where apparatus such as air switches, grounding switches, interrupter switches, and circuit-interrupting devices are required to operate under iced conditions, the increased friction and dynamic forces shall be considered in apparatus loads.

For example, in lattice structures, the weight of 1/2 inch of ice may be considered to be 50 percent of the weight of steel structures and 150 percent of the weight of aluminum structures. Structures made of other materials shall take into account a load in pounds due to 1/2 inch of ice calculated by multiplying the area of the exposed surface in square feet by 2.4.

36.7.1 Class “A” Structures

The horizontal deflection of vertical members shall be limited to 1/100 of the vertical height of the structure. The vertical deflection of horizontal members shall be limited to 1/200 of the span. The horizontal deflection of horizontal members shall be limited to 1/200 of the span.

Copyright National Electrical Manufacturers Association
Provided by IHS under license with NEMA
No reproduction or networking permitted without license from IHS
Not for Resale

36.7.2 Class “B” Structures

The horizontal deflection of vertical members shall be limited to 1/50 of the vertical height of the structure. The vertical deflection of horizontal members shall be limited to 1/200 of the span. The horizontal deflection of horizontal members shall be limited to 1/100 of the span.

In unusual applications, such as the installation of high speed circuit-interrupting devices, the above deflection limits may have to be reduced in accordance with the manufacturer’s instructions.

36.8 STRESSES

The allowable stresses for structural members under static loads plus dead loads shall be calculated and have a factor of safety according to the methods outlined in the American Institute of Steel construction publication *Manual of Steel Construction* and the Aluminum Association publication *Specification for Aluminum Structures* (Section 1 of SAS-30).

For materials other than steel and aluminum, the recommended factors of safety and allowable stress calculations shall be in accordance with the appropriate industry standards.

36.9 SERVICE CONDITIONS

If the structure is required to be galvanized, it shall be galvanized in accordance with the latest revision of ASTM Specification A 123. For fabricated tubular structures, reference should also be made to ASTM Specification A 386.

36.10 ALUMINUM AND DISSIMILAR MATERIALS

When aluminum is to be placed in contact with or fastened to steel or other dissimilar materials, the following is recommended.

36.10.1 Steel

Aluminum surfaces to be placed in contact with steel should be given one coat of a zinc chromate primer complying with Federal Specification TT-P-645, or the equivalent, or one coat of a suitable nonhardening joint compound capable of excluding moisture from the joint during prolonged service. Additional protection can be obtained by applying the joint compound in addition to the zinc chromate primer. The zinc chromate paint should be allowed to dry to hardness before the parts are assembled.

Aluminum surfaces to be placed in contact with stainless, aluminized, hot-dip-galvanized, or electro-galvanized steel need not be treated.

Steel surfaces to be placed in contact with aluminum should be painted with a good quality priming paint, such as a zinc chromate primer complying with Federal Specification TT-P-645, followed by one coat of paint consisting of 2 pounds of aluminum paste pigment, complying with ASTM Specification D962 (Type 2, Class B) per gallon of varnish meeting Federal Specification TT-V-81F (Type 2 or the equivalent). Stainless, aluminized, hot-dip-galvanized, and electrogalvanized steel surfaces to be placed in contact with aluminum need not be painted.

36.10.2 Wood

Aluminum surfaces to be placed in contact with wood should be given a heavy coat of an alkali-resistant bituminous paint before installation. The paint should be applied in the condition in which it is received from the manufacturer without the addition of any thinner.

36.10.3 Concrete

Where the surface of concrete in contact with aluminum is subjected to moisture entrapment, the aluminum surface should be treated at the installation site as specified in 36.9.2

Copyright National Electrical Manufacturers Association
Provided by IHS under license with NEMA
No reproduction or networking permitted without license from IHS
Not for Resale

36.11 FOUNDATIONS

36.11.1 General

Proper provisions should be made to transmit the forces to the foundations of the structure. The forces to be transmitted are bearing, uplifting shear, and overturning moment. The foundations should be designed to prevent overturning under maximum loads and should have a safety factor of at least 1.5.

36.11.2 Earth Values

Soil conditions should be investigated before the foundations are designed. The following earth pressure should be used in the absence of definite information as to soil values.

Earth should be assumed to weigh 90 pounds per cubic foot (1442 kg/m^3) and, if the foundation is of a suitable design, its weight may be used to resist overturning or uplifting. The shearing values or cohesive strength should be considered. Earth pressure should not exceed 4000 pounds per square foot (192 kPa) unless otherwise specified.

36.11.3 Anchor Bolts

Anchor bolts are usually supplied as a part of the structure. Foundation designs and foundations are usually furnished by others.

Anchor bolts should be designed to provide resistance to all conditions of tension and shear at the bases of columns. The allowable stress and safety factors should be in accordance with the American Institute for Steel Construction.

36.12 DETAILING AND FABRICATION

36.12.1 Straightening

All members that are bent or out of line after fabrication shall be carefully straightened without mutilating the material or its finish. H-beam and similar members shall have distortions limited to 1/200 of their length, and chord angles and similar members shall have distortions limited to 1/100 of their length.

36.12.2 Bolt Length

Bolts shall be of sufficient length to assure full thread engagement of the nut.

36.12.3 Welding

The welding requirements and techniques recommended by the American Institute of Steel Construction and the Aluminum Association shall be followed in the fabrication of all welded members.

Materials other than steel and aluminum should be joined in accordance with the appropriate industry standards.

36.12.4 Erection Marks

All members shall be clearly marked to provide easy identification in the field. Markings shall be durable in nature and shall agree with erection drawings for each substation.

36.12.5 Erection Drawings

Erection drawings shall identify the class of the structure as either class A or class B (36.11B).

--`,,`,,`-`-`,,`,,`,`,,`---

Copyright National Electrical Manufacturers Association
Provided by IHS under license with NEMA
No reproduction or networking permitted without license from IHS
Not for Resale

36.12.6 Bolt Spacing

The minimum spacing of bolts shall be as follows:

a. 1-5/8 inches (41.3mm) for 5/8-inch-diameter bolts
b. 1-7/8 inches (47.6 mm) for 3/4-inch-diameter bolts
c. 2-1/4 inches (57.2 mm) for 7/8-inch-diameter bolts
d. 2-5/8 inches (66.7 mm) for 1-inch-diameter bolts

36.13 MISCELLANEOUS

36.13.1 Shipping

All structures should be shipped completely “knocked down” unless otherwise specified. All sections should be properly prepared for shipment so that no damage will result during transit.

Bolts and other similar material should be shipped in boxes or other suitable containers. When shipment is made, care must be exercised to include all parts required for the complete structure.

36.13.2 Field Erection

Since the structural substation design reflects a high degree of engineering skill, substation manufacturers should be consulted before any changes in the design of the structure are made during erection.

36.13.3 Clearances and Spacings

Recommended ground clearances and phase spacings for outdoor substations shall be as specified in Table 36.2.

Copyright National Electrical Manufacturers Association
Provided by IHS under license with NEMA
No reproduction or networking permitted without license from IHS
Not for Resale

Table 36-2
OUTDOOR SUBSTATIONS—BASIC PARAMETERS

Line No.	Rated Max. Volt, kV rms	Rated Withstand Voltage: Impulse 1.2 × 50 μs Wave kV Crest	Rated Withstand Voltage: 60 Hz kV rms, Wet, 10 sec.	Minimum Metal-to-Metal Distance Between Rigidly Supported Energized Conductors, Inches (meters)	Ground Clearance, Inches (meters): Recommended	Ground Clearance, Inches (meters): Minimum	Recommended Phase Spacing, Center to Center, Inches (meters): Horn Gap Switch and Expulsion Type Fuses	Recommended Phase Spacing, Center to Center, Inches (meters): Horizontal Break Disc. Switches	Recommended Phase Spacing, Center to Center, Inches (meters): Bus Supports, Vertical Brk. Disc. Switches Power Fuses Non-expulsion Types Rigid Conductors	Recommended Minimum Clearance Between Overhead Conductor and Ground for Personal Safety, Feet (Meters)	Withstand S.S., Crest kV
	(1)	(2)	(3)	(4)	(5)	(6)	(7)	(8)	(9)	(10)	(11)
1	8.3	95	30	7 (0.18)	7.5 (0.19)	6 (0.15)	36 (0.91)	30 (0.76)	18 (0.46)	8 (2.44)	. . .
2	15.5	110	45	12 (0.30)	10 (0.25)	7 (0.18)	36 (0.91)	30 (0.76)	24 (0.61)	9 (2.74)	. . .
3	27	150	60	15 (0.38)	12 (0.30)	10 (0.25)	48 (1.22)	36 (0.91)	30 (0.76)	10 (3.05)	. . .
4	38.	200	80	18 (0.46)	15 (0.38)	13 (0.33)	60 (1.52)	48 (1..22)	36 (0.91)	10 (3.05)	. . .
5	48.3	250	100	21 (0.53)	18 (0.46)	17 (0.43)	72 (1.83)	60 (1.52)	48 (1.22)	10 (3.05)	. . .
6	72.5	350	145	31 (0.79)	29 (0.74)	25 (0.64)	84 (2.13)	72 (1.83)	60 (1.52)	11 (3.35)	. . .
7	123	550	230	53 (1.35)	47 (1.19)	42 (1.07)	120 (3.05)	108 (2.74)	84 (2.13)	12 (3.66)	. . .
8	145	650	275	63 (1.60)	52.5 (1.33)	50 (1.27)	144 (3.66)	132 (3.35)	96.(2.44)	13 (3.96)	. . .
9	170	750	315	72 (1.83)	61.5 (1.56)	58 (1.47)	168 (4.27)	156 (3.96)	108 (2.74)	14 (4..27)	. . .
10	245	900	385	89 (2.26)	76 (1.93)	71 (1.80)	192 (4.88)	192 (4.88)	132 (3.35)	15 (4.57)	. . .
11	245	1050	455	105 (2.67)	90.5 (2.30)	83 (2.11)	216 (5.49)	216 (5.49)	156 (3.96)	16 (4.88)	. . .
12	362	1050	455	105 (2.67)	90.5 (2.30)	84 (2.13)*	216 (5.49)	216 (5.49)	156 (3.96)	16 (4.88)	650
13	362	1300	525	119 (3.02)	106 (2.69)	104 (2.64)*	. . .	. . .	174 (4.43)	18 (5.49)	739
14	550	1550	620	. . .	. . .	124 (3.15)*	. . .	. . .	. . .	. . .	808
15	550	1800	710	. . .	. . .	144 (3.66)*	. . .	. . .	300 (7.62)	. . .	898
16	800	2050	830	. . .	. . .	166 (4.22)*	. . .	. . .	. . .	. . .	982

NOTE—For insulator data, refer to ANSI C29.8 and C29.9.

*Ground clearance for voltages 362 kV and above is selected on the premise that at this level; selection of the insulation depends on switching surge levels of the system. The values were selected from Table 1 of IEEE Transaction Paper T-72-131-6 (Vol. No. 5, page 1924), which is a report of the Transmission Substations Subcommittee. For additional switching surge values and ground clearances, refer to ANSI C2.

Copyright National Electrical Manufacturers Association
Provided by IHS under license with NEMA
No reproduction or networking permitted without license from IHS
Not for Resale

Copyright National Electrical Manufacturers Association
Provided by IHS under license with NEMA
No reproduction or networking permitted without license from IHS
Not for Resale

Appendix A
TABLES OF ELECTRICAL, MECHANICAL, AND PHYSICAL CHARACTERISTICS OF INDOOR PORCELAIN INSULATORS

Table A-1 — Electrical and Mechanical Characteristics of Indoor Insulator Units
Table A-2 — Physical Characteristics of Indoor Insulators, Class A
Table A-3 — Physical Characteristics of Indoor Insulators, Class B
Table A-4 — Physical Characteristics of Indoor Insulators, Class II

Copyright National Electrical Manufacturers Association
Provided by IHS under license with NEMA
No reproduction or networking permitted without license from IHS
Not for Resale

Table A-1
ELECTRICAL AND MECHANICAL CHARACTERISTICS OF INDOOR INSULATOR UNITS

Maximum Voltage Rating, kV	Withstand Test Voltage, kV			Strength Class 10 (Strength, Pounds)				Strength Class 20 (Strength, Pounds)			
	Impulse†	Low Frequency, Dry, 1 Min.	Dew, 10 sec.	Cantilever	Torsion, Inch-Pounds	Tension	Compression	Cantilever	Torsion, Inch-Pounds	Tension	Compression
2.5	45	15	10	750	1500	1500	10000	. . .	. . .	. . .	. . .
4.8	60	19	15	750	1500	1500	10000	1000	2500	2000	20000
8.3	75	28	24	750	1500	1500	10000	1500	3500	3000	20000
15.5	95	38	26	. . .	. . .	. . .	. . .	1250	3500	3000	20000
15.5	110	50	30	. . .	. . .	. . .	. . .	1000	3500	3000	20000
27.0	150	60	40	. . .	. . .	. . .	. . .	. . .	. . .	. . .	. . .
38*	200	80	. . .	. . .	. . .	. . .	. . .	. . .	. . .	. . .	. . .

Maximum Voltage Rating, kV	Strength Class 30 (Strength, Pounds)				Strength Class 40 (Strength, Pounds)				Strength Class 50 (Strength, Pounds)			
	Cantilever	Torsion, Inch-Pounds	Tension	Com-pression	Cantilever	Torsion, Inch-Pounds	Tension	Com-pression	Cantilever	Torsion, Inch-Pounds	Tension	Com-pression
2.5	. . .	. . .	. . .	. . .	. . .	. . .	. . .	. . .	. . .	. . .	. . .	. . .
4.8	2000	4500	3500	30000	. . .	. . .	. . .	. . .	. . .	. . .	. . .	. . .
8.3	3000	6000	5000	30000	6000	10000	8000	50000	12000	15000	12000	80000
15.5	2500	6000	5000	30000	5000	10000	8000	50000	10000	15000	12000	80000
15.5	2000	6000	5000	30000	4000	10000	8000	50000	8000	15000	12000	80000
27.0	1500	6000	5000	30000	3000	10000	8000	50000	6000	15000	12000	80000
38*	1250	6000	5000	30000	2500	10000	8000	50000	6000	15000	12000	80000

NOTE—For physical characteristics, see Tables A-2, A-3, and A-4 of this Appendix.

* The 38-kV insulator units are for bus supports and front-connected devices only.

† Impulse withstand test voltage with 1.2 x 50 wave, positive and negative.
Cantilever strength ratings are given 2-1/2 inches above cap.

--`,,`-`-`,,`,,`,`,,`---

Copyright National Electrical Manufacturers Association
Provided by IHS under license with NEMA
No reproduction or networking permitted without license from IHS

Not for Resale

Table A-2
PHYSICAL CHARACTERISTICS OF INDOOR INSULATORS, CLASS A

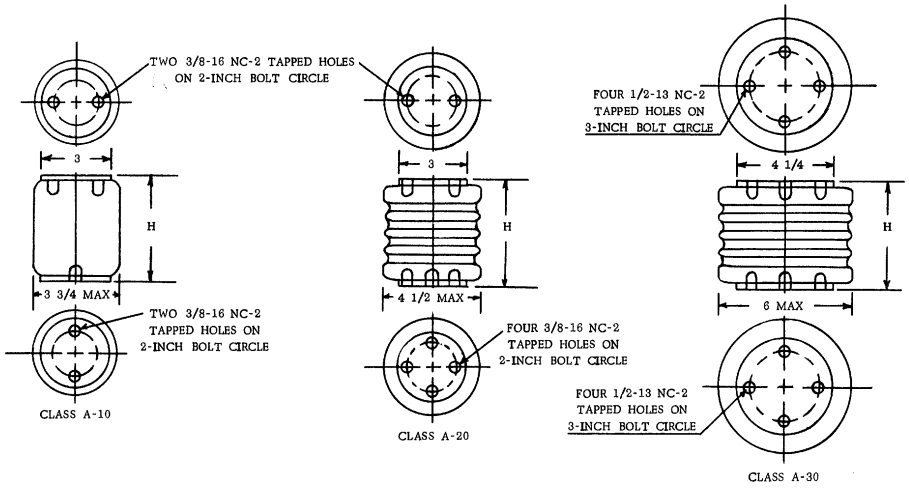

kV	Dimension H, inches		
	Class A-10	Class A-20	Class A-30
2.5	2-1/2	. . .	. . .
4.8	3-1/2	3-1/2	3-1/2
8.3	4-1/2	4-1/2	4-1/2
15.5	. . .	6	6
15.5	. . .	7-1/2	7-1/2
27.0	. . .	. . .	10-1/2
38.0	. . .	. . .	15

NOTE 1—The minimum depth of usable threads in tapped holes shall be equal to the thread diameter + 1/8 inch.
NOTE 2—Additional center bolt hole and its size are optional.

All dimensions in inches.

Copyright National Electrical Manufacturers Association
Provided by IHS under license with NEMA
No reproduction or networking permitted without license from IHS
Not for Resale

Table A-3
PHYSICAL CHARACTERISTICS OF INDOOR INSULATORS, CLASS B

NOTE 1—The minimum depth of usable threads in tapped holes shall be equal to the thread diameter + 1/8 inch.
NOTE 2—The additional four holes shown by dotted lines are optional.

All dimensions in inches.

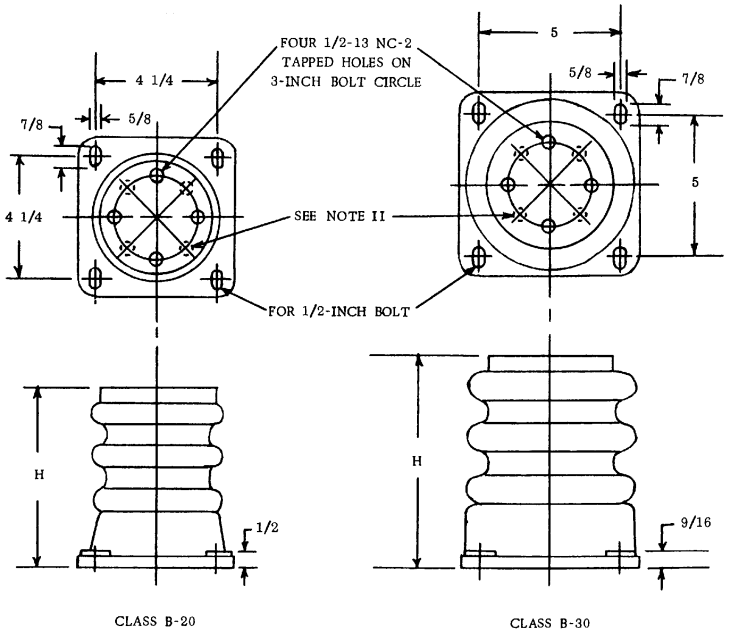

CLASS B-20 CLASS B-30

kV	Dimension H, inches	
	Class B-20	Class B-30
4.8	5	. . .
8.3	6	6
15.5	7-1/2	7-1/2
15.5	9	9
27.0	. . .	12
38.0	. . .	16-1/2

Copyright National Electrical Manufacturers Association
Provided by IHS under license with NEMA
No reproduction or networking permitted without license from IHS
Not for Resale

Table A-4
PHYSICAL CHARACTERISTICS OF INDOOR INSULATORS, CLASS II

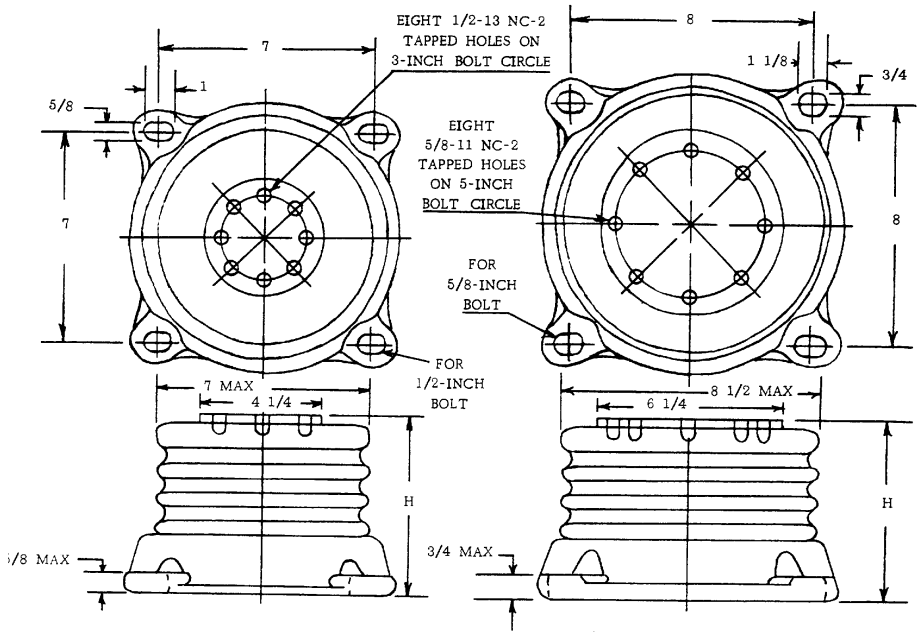

NOTE 1—The minimum depth of usable threads in tapped holes shall be equal to the thread diameter + 1/8 inch.

All dimensions in inches.

kV	Dimension H, inches
8.3	6
15.5	7-1/2
15.5	9
27.0	12
38.0	16-1/2

Copyright National Electrical Manufacturers Association
Provided by IHS under license with NEMA
No reproduction or networking permitted without license from IHS
Not for Resale

Copyright National Electrical Manufacturers Association
Provided by IHS under license with NEMA
No reproduction or networking permitted without license from IHS
Not for Resale