9009279 0004116 716

NATIONAL ELECTRICAL MANUFACTURERS ASSOCIATION

2101 L STREET N.W. WASHINGTON, D.C. 20037

December 1, 1977

TO ALL REPRESENTATIVES OF MEMBER COMPANIES
IN THE SWITCHGEAR SECTION

Subject: Editorial correction to Revision No. 1, dated November 1977, for the NEMA Standards Publication for Alternating-current High-voltage Circuit Breakers, SG 4-1975

Gentlemen:

Revision No. 1 to NEMA Standards Publication SG 4-1975 inadvertently contained an editorial error. To bring your copy up to date, insert Page No. 24A of Part 3 dated December 1977. Delete from your records Page 24A of Part 3 dated November 1977.

Please insert this copy carefully since extra copies are not available.

Sincerely yours,

Nels M. Andersen

Nels M. Andersen
Standards Publications Editor

NMA:jps
enc.

Copies to: Technical Committees of All Groups in the Switchgear Section
Lists A-1 through A-4
All known holders of SG 4-1975

Copyright National Electrical Manufacturers Association
Provided by IHS under license with NEMA
No reproduction or networking permitted without license from IHS
Not for Resale

9009279 0004117 652

STANDARDS PUBLICATION/NO. SG 4-1975

nema

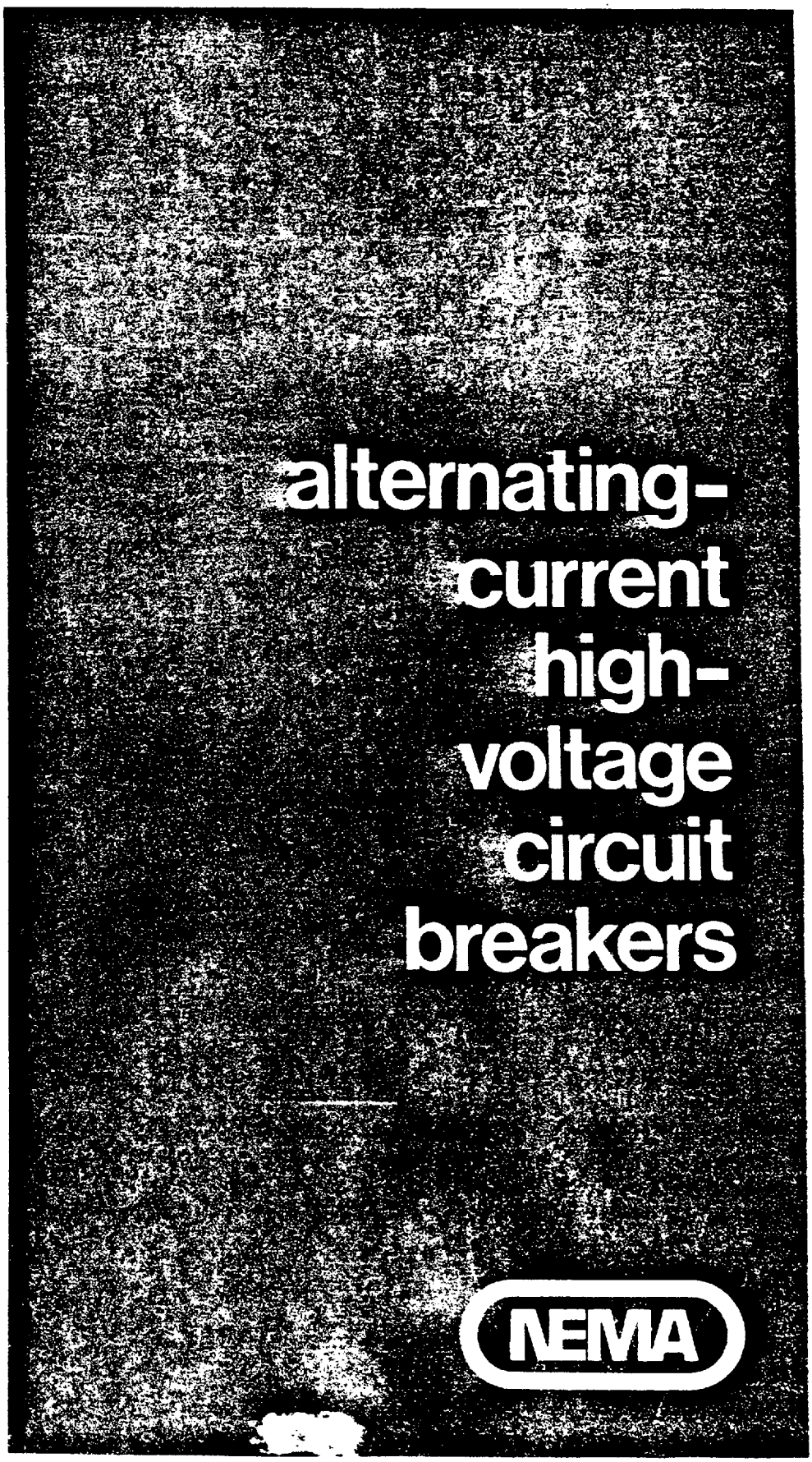

NATIONAL ELECTRICAL MANUFACTURERS ASSOCIATION • 155 EAST 44TH STREET, NEW YORK, N.Y. 10017

Copyright National Electrical Manufacturers Association
Provided by IHS under license with NEMA
No reproduction or networking permitted without license from IHS
Not for Resale

9009279 0004118 599

TABLE OF CONTENTS

	Part	Page
DEFINITIONS	1	1-3
RATING STANDARDS	2	1-5
Applicable American National Standards	2	1
FUNCTIONAL COMPONENTS AND REQUIREMENTS	3	1-26
Applicable American National Standards	3	1
Frame-mounted Indoor Oil Circuit Breakers	3	1
Indoor Station-type Compressed-air-blast Circuit Breakers	3	2
Indoor Oilless Circuit Breakers	3	4
Tank-type Outdoor Oil Circuit Breakers	3	4
Outdoor Oilless Circuit Breakers	3	5
Common Mounting Base	3	5
Operating Mechanisms for Outdoor Circuit Breakers	3	5
Thread Dimensions for Terminal Studs	3	8
Instrument Current Transformers	3	9
Bushing Potential Devices for Tank-type Outdoor Oil Circuit Breakers	3	20
Undervoltage Trip Device	3	22
Secondary and Control Wiring (Small Wiring)	3	23
Pressurized Fiberglass-reinforced-plastic Components	3	23
Pressurized Systems	3	23
Dimensions of Circuit Breaker Bushings	3	24
Preferred Mounting Flange Dimensions of Bushings for Use in Oil-filled Apparatus	3	25
Seismic Withstand	3	25
TESTING STANDARDS	4	1-8
Applicable American National Standards	4	1
Radio Influence Voltage Tests (Design Test)	4	1
Bushing Potential Device Test (Production Test)	4	3
Nonpressurized Porcelain Components (Design Test)	4	3
Pressurized Components	4	3
Noise Requirements	4	6
APPLICATION STANDARDS	5	1-6
Applicable American National Standards	5	1
Circuit Breakers for Alternating-current Motor Starting	5	1
Three-coil Trip or Equivalent Fault Protection	5	3
Circuit Breakers Normally Designed for Three-phase Systems When Applied to Single Phase Systems Below 72.5 kV Having One Conductor Grounded	5	3
Neutral Grounding Circuit Breakers	5	4
Multiple Single-pole Circuit Breakers	5	4
Repetitive Duty—Indoor Air Circuit Breakers for Arc Furnace Switching	5	4
INSTALLATION, OPERATION AND MAINTENANCE	6	1-9

© 1975 by National Electrical Manufacturers Association

Copyright National Electrical Manufacturers Association
Provided by IHS under license with NEMA
No reproduction or networking permitted without license from IHS

Not for Resale

FOREWORD

This is one of six* NEMA Standards Publications covering the range of low- to high-voltage switchgear products. Such products are generally applied to utility and industrial use with a portion going to commercial applications. User and general interest input played a significant part in the development of the product requirements carried by this publication. It, as well as the other NEMA Standards Publications, is not intended to stand alone for without exception:

1. It adopts by reference the appropriate American National Standards (approved by American National Standards Committee C37) as the main body of this NEMA publication.

2. It offers a vehicle for getting into print the proposed NEMA revisions of the pertinent C37 Standards, until such time as those revisions can be evaluated, approved and published as a revision of the particular American National Standard.

3. It covers additional information about a product of specific interest to the manufacturing community, which the American National Standards Committee does not include in its scope.

Within this NEMA publication, therefore, the main focus is on American National Standards and the consensus method of standards approval used by ANSI.

Switchgear standards are, for the most part, developed through the combined and separate efforts of IEEE, AEIC and NEMA. American National Standards Committee C37 serves as the administrator through which are channeled all switchgear proposals intended for eventual publication as American National Standards. It is within these organizations that the principal manufacturer-user exchange is accomplished. This exposes product requirements to those people having the direct responsibility for the use, design, application, maintenance and acceptance of the products and thus assures a most objective and critical review within the voluntary standards program.

SG 2-1975	High Voltage Fuses
SG 3-1975	Low-voltage Power Circuit Breakers
* SG 4-1975	Alternating-current High-voltage Circuit Breakers
SG 5-1975	Power Switchgear Assemblies
SG 6-1974	Power Switching Equipment
SG 13-1972	Automatic Circuit Reclosers, Automatic Line Sectionalizers and Oil-filled Capacitor Switches for Alternating-current Systems

These standards are periodically reviewed by the High Voltage Power Circuit Breaker Voting Classification of the Switchgear Section of NEMA for any revisions necessary to keep them up to date with advancing technology. Proposed or recommended revisions should be submitted to:

Technical Director
Manager, Engineering and Safety Regulations Department
National Electrical Manufacturers Association
155 East 44th Street
New York, New York 10017

Copyright National Electrical Manufacturers Association
Provided by IHS under license with NEMA
No reproduction or networking permitted without license from IHS
Not for Resale

SCOPE

HIGH VOLTAGE POWER CIRCUIT BREAKER

VOTING CLASSIFICATION OF THE SWITCHGEAR SECTION

1. Oil Circuit Breakers

   (a) Oil circuit breakers, both indoor and outdoor, including all interrupting ratings and voltage ratings above 1000 volts for alternating-current service. (Automatic circuit reclosers are excluded.)

   (b) Attachments for these circuit breakers, such as bushing current transformers, bushing potential devices, interlocks, undervoltage devices, shunt trips, overcurrent trips, etc., and auxiliaries sold with the breakers such as closing relays, structural steel supports, etc.

   (c) Renewal, modernizing, and spare parts for these circuit breakers and attachments.

2. Oilless and Low-oil-content Circuit Breakers

   (a) All oilless and low-oil-content circuit breakers, both indoor and outdoor, including all interrupting ratings and voltage ratings above 1000 volts for alternating-current service.

   (b) Attachments for these circuit breakers, such as bushing current transformers, bushing potential devices, interlocks, undervoltage devices, shunt trips, overcurrent trips, etc., air or gas supply and storage equipment.

   (c) Renewal, modernizing, and spare parts for these circuit breakers and attachments.

Copyright National Electrical Manufacturers Association
Provided by IHS under license with NEMA
No reproduction or networking permitted without license from IHS
Not for Resale

9009279 0004121 083

AMERICAN NATIONAL STANDARDS

The following American National Standards may be of interest to users of this NEMA Publication No. SG 4-1975. Copies are available directly from the American National Standards Institute, Inc., 1430 Broadway, New York, N. Y. 10018. Users are cautioned to secure the latest editions.

Publication No.	Title
C37.04-1964 (R 1969)	Rating Structure for AC High-Voltage Circuit Breakers (Including Supplements C37.04a and C37.04b)
C37.05-1964 (R 1969)	Methods for Determining the Values of a Sinusoidal Current Wave and a Normal-Frequency Recovery Voltage for AC High-Voltage Circuit Breakers
C37.06-1971	Schedules of Preferred Ratings and Related Required Capabilities for AC High-Voltage Circuit Breakers Rated on a Symmetrical Current Basis
C37.07-1969	Interrupting Capability Factors for Reclosing Service for AC High-Voltage Circuit Breakers
C37.071-1969	Requirements for Line Closing Switching Surge Voltage Control for AC High-Voltage Circuit Breakers Rated on a Symmetrical Current Basis (Including Supplement C37.071a)
C37.072-1971	Requirements for Transient Recovery Voltage for AC High-Voltage Circuit Breakers Rated on a Symmetrical Current Basis (IEEE Std 327-1971)
C37.0721-1971	Application Guide for Transient Recovery Voltage for AC High-Voltage Circuit Breakers Rated on a Symmetrical Current Basis (IEEE Std 328-1971)
C37.0722-1971	Schedules of Preferred Transient Recovery Voltage Ratings and Related Required Capabilities for AC High-Voltage Circuit Breakers Rated on a Symmetrical Current Basis
C37.073-1972	Requirements for Capacitance Current Switching for AC High-Voltage Circuit Breakers Rated on a Symmetrical Current Basis (IEEE Std 341-1972)
C37.0731-1973	Application Guide for Capacitance Current Switching for AC High-Voltage Circuit Breakers Rated on a Symmetrical Current Basis (IEEE Std 342-1972)
C37.0732-1972	Schedule of Preferred Ratings for Capacitance Current Switching for AC High-Voltage Circuit Breakers Rated on a Symmetrical Current Basis
C37.074-1972	Requirements for Switching-Impulse Voltage Insulation Strength for AC High-Voltage Circuit Breakers Rated on a Symmetrical Current Basis (362 kV and Above) (IEEE Std 339-1972)
C37.076-1972	Requirements for Pressurized Components of AC High-Voltage Circuit Breakers Rated on a Symmetrical Current Basis (IEEE Std 340-1972)
C37.078-1972	Requirements for External Insulation for Outdoor AC High-Voltage Circuit Breakers Rated on a Symmetrical Current Basis (IEEE Std 343-1972)
C37.0781-1972	Schedule of Dielectric Test Values for Outdoor AC High-Voltage Circuit Breaker External Insulation Rated on a Symmetrical Current Basis
C37.09-1964 (R 1969)	Test Procedure for AC High-Voltage Circuit Breakers (Including Supplement C37.09a)
C37.010-1972	Application Guide for AC High-Voltage Circuit Breakers Rated on a Symmetrical Current Basis (IEEE Std 320-1972)

(Continued)

Copyright National Electrical Manufacturers Association
Provided by IHS under license with NEMA
No reproduction or networking permitted without license from IHS
Not for Resale

(Continued)

Publication No.	Title
C37.4-1953 (R 1971)	Definitions and Rating Structure for AC High-Voltage Circuit Breakers Rated on a Total Current Basis (Including Supplement C37.4a and C37.4b)
C37.5-1969	Methods for Determining Values of a Sinusoidal Current Wave, a Normal-Frequency Recovery Voltage, and a Guide for Calculation of Fault Currents for Application of AC High-Voltage Circuit Breakers Rated on a Total Current Basis
C37.6-1971	Schedules of Preferred Ratings for AC High-Voltage Circuit Breakers Rated on a Total Current Basis
C37.7-1960 (R 1971)	Interrupting Rating Factors for Reclosing Service for AC High-Voltage Circuit Breakers Rated on a Total Current Basis
C37.9-1953 (R 1971)	Test Code for AC High-Voltage Circuit Breakers Rated on a Total Current Basis (Including Supplement C37.9a)
C37.11-1972	Requirements for Electrical Control for AC High-Voltage Circuit Breakers Rated on a Symmetrical Current Basis and a Total Current Basis
C37.12-1969	Guide Specifications for AC High-Voltage Circuit Breakers Rated on a Symmetrical Current Basis and a Total Current Basis
C37.20 (1974 Edition)	Switchgear Assemblies
C37.85-1972	Safety Requirements for X-Radiation Limits for AC High-Voltage Power Vaccum Interrupters Used in Power Switchgear (Including Supplement C37.85a)
C37.100-1972	Definitions for Power Switchgear
C50	Rotating Electrical Machinery
C57.13-1968	Requirements for Instrument Transformers
C59	Electrical Insulating Materials
C76.1-1964 (R 1970)	Requirements and Test Code for Outdoor Apparatus Bushings
C84.1-1970	Voltage Ratings for Electric Power Systems and Equipment (60 Hz) (Including Supplement C84.1a)
S1.1-1960 (R 1971)	Acoustical Terminology (Including Mechanical Shock and Vibration)
S1.4-1971	Specification for Sound Level Meters
S1.13-1971	Methods for the Measurement of Sound Pressure Levels

Copyright National Electrical Manufacturers Association
Provided by IHS under license with NEMA
No reproduction or networking permitted without license from IHS
Not for Resale

9009279 0004123 956

ALTERNATING-CURRENT HIGH-VOLTAGE CIRCUIT BREAKERS

Part 1
DEFINITIONS

SG 4-1.01 APPLICABLE AMERICAN NATIONAL STANDARDS

American National Standard C37.100 has been approved by NEMA and, with the following additions, constitutes Part 1 of this publication.

NEMA Standard 3-12-1975.

SG 4-1.02 AIR SYSTEM FOR OPERATING MECHANISM

An air system is an assembly of parts and devices which provide compressed air for the operation of a circuit breaker or circuit breaker operating mechanism. It may include equipment external to the circuit breaker and/or equipment which is an integral part of the circuit breaker or circuit breaker mechanism.

A. Air Receiver

An air receiver is a tank or other closed vessel for storing air under pressure.

B. Header

A header is a main pipe connection from which compressed air is drawn at various points to supply several circuit breakers or the several poles of one circuit breaker.

C. Dump Valve

A dump valve is a valve arranged for rapidly releasing compressed air from a confined space.

D. Exhaust Ports

Exhaust ports are the openings through which compressed air is released from a confined space.

E. Air Control Valve

An air control valve is a valve which is responsive to an applied signal for releasing air to or from an operating cylinder.

1. Electrical Control Valve—An electrical control valve is a valve whose operation is initiated electromagnetically as by a solenoid.

2. Pneumatic Control Valve—A pneumatic control valve is a valve whose operation is initiated by compressed air.

3. Electropneumatic Control Valve—An electropneumatic control valve is a valve whose operation is initiated electromagnetically and controlled, timed and completed pneumatically.

NEMA Standard 9-17-1953, revised 3-12-1975.

SG 4-1.03 CONTROL SYSTEM FOR COMPRESSED-AIR-BLAST CIRCUIT BREAKERS

A control system is a combination of pneumatic and electrical control equipment by which sequential operation of the circuit breaker parts is obtained.

A. Low-pressure Interlock

A low-pressure interlock is a device which operates pneumatically to prevent automatic circuit breaker operation when the available air pressure falls below a safe value.

B. Hand Trip Valve

A hand trip valve is a manually operated pneumatic device to open the circuit breaker or a pole of the circuit breaker when the electrical control is inoperative.

C. Sequence Switch Interlock

A sequence switch interlock is a pneumatic or electrical device which prevents the opening of the sequence switch until after the operation of the interrupter.

NEMA Standard 9-17-1953, revised 11-16-1967.

SG 4-1.04 CROSS BAR (BLADE)

A cross bar is that current-carrying part to which the lift rod of a circuit breaker is attached.

NEMA Standard 6-13-1923, revised 1-15-1925; 6-13-1925; 2-20-1941; 9-17-1953; 1-22-1954; 3-14-1963.

SG 4-1.05 DEVICES

A. Emergency Closing Device

An emergency closing device for a power operated circuit breaker is a device for providing the equivalent of full operating energy by other than the

Copyright National Electrical Manufacturers Association
Provided by IHS under license with NEMA
No reproduction or networking permitted without license from IHS
Not for Resale

normal means. It permits closing the circuit breaker on an energized circuit under fault conditions, in an emergency, when the normal power source may be unavailable.

B. Pressure Switch

A pressure switch is a switch which closes or opens an electrical circuit in response to a predetermined value of pressure.

1. Motor Control Pressure Switch—A motor control pressure switch is a switch which governs the operation of a motor in order to maintain the desired operating pressure.

2. Alarm Pressure Switch—An alarm pressure switch is a switch which initiates a signal when the operating pressure is above or below the desired range.

3. Lockout Pressure Switch—A lockout pressure switch is a switch which prevents the electrical operation of a circuit breaker if the operating pressure is below a predetermined value.

C. Strainer

A strainer is a screen or filter in the system to prevent the passage of foreign particles.

D. Check Valve

A check valve is a valve which prevents flow in one direction.

NEMA Standard 9-13-1946, revised 9-17-1953; 5-25-1954; 11-16-1967; 3-12-1975.

SG 4-1.06 HYDRAULIC SYSTEM FOR HYDRAULICALLY OPERATED MECHANISMS

A hydraulic system is an assembly of parts and devices which provides for the control of hydraulic energy for the operation of a circuit breaker or circuit breaker operating mechanism. It may include equipment external to the circuit breaker and/or equipment which is an integral part of the circuit breaker or circuit breaker mechanism.

A. Accumulator

An accumulator is a device in which potential energy is prestored by compressed and completely confined gas and is transmitted through the medium of a liquid, usually oil.

B. Hydraulic Control Valve

A hydraulic control valve is a valve which is responsive to an applied signal for controlling hydraulic fluid.

NEMA Standard 3-15-1956, revised 11-16-1967.

SG 4-1.07 INTERRUPTER FOR COMPRESSED AIR-BLAST CIRCUIT BREAKERS

An interrupter is an assembly of pneumatic and mechanical parts operable to obtain interruption of current flow.

A. Interrupter Column

An interrupter column is a movable or stationary insulating column which contains the interrupter element and the connecting pneumatic or mechanical devices necessary for the operation of the interrupter by the circuit breaker mechanism.

B. Interrupter Head

An interrupter head is the interrupter element within the interrupter column or pole unit where current interruption occurs.

C. Muffler

A muffler is a device located with respect to the interrupter to reduce the exhaust noise level.

D. Exhaust Header

An exhaust header is a receiver for gases exhausted from the arc chute or interrupter head. It is common to one or more pole units and collects and momentarily delays the exhaust of these gases to atmosphere.

E. Blade Tip

A blade tip is the contact-making end of a blade-shaped contact member.

F. Fixed Gap

A fixed gap is a gap resulting from contact motion over a fixed distance for the purpose of obtaining arc length control.

G. Air Line

An air line is tubing or piping used for moving compressed air from one point to another in any closed air system.

NEMA Standard 9-17-1953, revised 11-16-1967; 3-12-1975.

Copyright National Electrical Manufacturers Association
Provided by IHS under license with NEMA
No reproduction or networking permitted without license from IHS
Not for Resale

9009279 0004125 729

SG 4-1.08 LIFT OR PUSH RODS

Lift or push rods are insulating rods to which the moving contacts of a circuit breaker are attached and through which they are operated.

NEMA Standard 6-13-1923, revised 1-15-1925; 6-13-1925; 2-20-1941; 9-17-1953; 1-22-1954; 3-12-1975.

SG 4-1.09 OIL

A. Inhibited Oil

Inhibited oil is mineral insulating oil to which a synthetic oxidation inhibitor has been added.

B. Uninhibited Oil

Uninhibited oil is mineral insulating oil to which no synthetic oxidation inhibitor has been added.

NEMA Standard 11-12-1953.

SG 4-1.10 RECLOSING DUTY (DUTY CYCLE)

Reclosing duty is a requirement of service that demands that a circuit breaker close a number of times in succession to restore power to a faulted circuit (or system) with a time interval between successive closings before the circuit breaker locks out in its open position.

NEMA Standard 9-17-1953.

SG 4-1.11 INTERRUPTER RESISTOR

An interrupter resistor is a device used in conjunction with the interrupter to reduce short-circuit current and/or the rate of rise of recovery voltage across separable contacts at interruption, or to equalize voltages across two or more separable contacts in series at and after interruption, or to assist in controlling voltage surges on closing.

NEMA Standard 9-17-1953, revised 11-16-1967; 3-12-1975.

SG 4-1.12 RESISTOR PROBE

A resistor probe is a metallic member which is used in conjunction with the interrupter to provide for arc transfer and/or the insertion of a resistor as contacts separate or close during circuit breaker operation.

NEMA Standard 9-17-1953, revised 11-16-1967; 3-12-1975.

SG 4-1.13 SEQUENCE SWITCH

A sequence switch is a switch which is connected in series with an interrupter and interlocked with the interrupter so that it will not open until after the operation of the interrupter.

A. Isolating Switch

An isolating switch is a sequence switch which is designed to hold rated voltage across its contacts.

B. Rotating Column

A rotating column is an insulating columnar structure which can rotate on its base and to which are affixed interrupter heads or sequence switch contacts made operable by rotation of the column.

NEMA Standard 9-17-1953.

SG 4-1.14 STROKE

Stroke is the distance covered by the moving contacts between the fully closed and fully opened (at rest) position. For circuit breakers with pivoted contact blades, the stroke is the distance covered by the moving contact blade tip between the fully closed and fully opened positions.

NEMA Standard 2-20-1941, revised 11-16-1967.

SG 4-1.15 DIRECTION OF FLOW

A. Downstream

"Downstream" refers to the same direction as that of the natural flow of any medium away from a reference point.

B. Upstream

"Upstream" refers to the direction opposite to the natural flow of any medium away from a reference point.

NEMA Standard 9-17-1953, revised 11-16-1967; 3-12-1975.

SG 4-1.16 EYE-TYPE CURRENT TRANSFORMER

An eye-type current transformer is a current transformer which has a fixed primary winding physically separated from multiple-secondary coils of the bushing-current-transformer type. The primary and secondary windings are assembled as an integral structure. The secondary windings have a conductive shield to provide protection against high voltage.

NEMA Standard 3-12-1975.

Copyright National Electrical Manufacturers Association
Provided by IHS under license with NEMA
No reproduction or networking permitted without license from IHS
Not for Resale

9009279 0004126 665

Part 2
RATING STANDARDS

SG 4-2.01 APPLICABLE AMERICAN NATIONAL STANDARDS

American National Standards C37.04, C37.04a, C37.04b, C37.06, C37.071, C37.0722, C37.0732, C37.074, C37.09, C37.09a, C37.4 and C37.6 have been approved by NEMA and, with the following additions, constitute Part 2 of this publication.

NEMA Standard 11-16-1967, revised 3-12-1975.

Copyright National Electrical Manufacturers Association
Provided by IHS under license with NEMA
No reproduction or networking permitted without license from IHS

Not for Resale

Copyright National Electrical Manufacturers Association
Provided by IHS under license with NEMA
No reproduction or networking permitted without license from IHS

Not for Resale

9009279 0004127 5T1

Table 2-1
Schedule of Preferred Ratings for Outdoor Circuit Breakers (Symmetrical Current Basis of Rating)
(Suggested Standard for Future Design) *

	Identification	Rated Values								Related Required Capabilities		
		Voltage		Insulation Level		Current				Current Values		
				Rated Withstand Test Voltage							3 Second	
Line No.	Nominal Voltage Class (1) kV, rms	Rated Maximum Voltage (2) kV, rms	Rated Voltage Range Factor, K	Low Frequency kV, rms	Impulse kV, Crest	Rated Continuous Current at 60 Hz (4) Amperes, rms	Rated Short-circuit Current (at Rated Maximum kV) (5) kA, rms	Rated Interrupting Time (6) Cycles	Rated Permissible Tripping Delay, Y Seconds	Rated Maximum Voltage Divided by K kV, rms	Maximum Symmetrical Interrupting Capability (7) K Times Rated Short-circuit Current kA, rms	Short-time Current Carrying Capability (8) K Times Rated Short-circuit Current kA, rms	Closing and Latching Capability 1.6 K Times Rated Short-circuit Current (8) (9) kA, rms
	Col. 1	Col. 2	Col. 3	Col. 4	Col. 5	Col. 6	Col. 7	Col. 8	Col. 9	Col. 10	Col. 11	Col. 12	Col. 13
1	7.2	8.25	1.0			800	20	5	2	8.25	20	20	32
2	14.4	15.5	1.0			800	12.5	5	2	15.5	12.5	12.5	20
3	14.4	15.5	1.0			1200	20	5	2	15.5	20	20	32
4	14.4	15.5	1.0			2000	20	5	2	15.5	20	20	32
5	14.4	15.5	1.0			1200	25	5	2	15.5	25	25	40
6	14.4	15.5	1.0			2000	25	5	2	15.5	25	25	40
7	14.4	15.5	1.0			1200	40	5	2	15.5	40	40	64
8	14.4	15.5	1.0			3000	63	8	2	15.5	63	63	101
9	23	25.8	1.0			1200	12.5	5	2	25.8	12.5	12.5	20
10	23	25.8	1.0			1200	20	5	2	25.8	20	20	32
11	23	25.8	1.0			1200	31.5	5	2	25.8	31.5	31.5	50
12	34.5	38	1.0			1200	20	5	2	38	20	20	32
13	34.5	38	1.0	(3)	(3)	1200	31.5	5	2	38	31.5	31.5	50
14	34.5	38	1.0			2000	31.5	5	2	38	31.5	31.5	50
15	34.5	38	1.0			1200	40	5	2	38	40	40	64
16	34.5	38	1.0			2000	40	5	2	38	40	40	64
17	46	48.3	1.0			1200	20	5	2	48.3	20	20	32
18	46	48.3	1.0			1200	31.5	5	2	48.3	31.5	31.5	50
19	46	48.3	1.0			2000	31.5	5	2	48.3	31.5	31.5	50
20	46	48.3	1.0			1200	40	5	2	48.3	40	40	64
21	46	48.3	1.0			2000	40	5	2	48.3	40	40	64
22	69	72.5	1.0			1200	20	5	2	72.5	20	20	32
23	69	72.5	1.0			1200	31.5	5	2	72.5	31.5	31.5	50
24	69	72.5	1.0			2000	31.5	5	2	72.5	31.5	31.5	50
25	69	72.5	1.0			2000	40	5	2	72.5	40	40	64

* For NEMA Standard ratings, see American National Standard C37.06, Tables 3 and 4.

Copyright National Electrical Manufacturers Association
Provided by IHS under license with NEMA
No reproduction or networking permitted without license from IHS

Not for Resale

NOTES TO TABLE 2-1:

For service conditions, definitions, and interpretation of ratings, tests, and qualifying terms, see American National Standards C37.04, C37.04a, C37.04b, C37.09 and C37.09a.

The interrupting ratings are for 60-hertz systems. Applications on 25-hertz systems should receive special consideration.

(1) For reference only.

(2) The voltage rating is based on American National Standard C84.1, where applicable, and is the maximum voltage for which the circuit breaker is designed and the upper limit for operation.

(3) For dielectric test values, refer to Table 5 of American National Standard C37.06.

(4) The typical 25-hertz continuous current ratings in amperes are given herewith following the respective 60-hertz ratings: 1200-1400; 2000-2250.

(5) With the limitation stated in 04-4.5 of American National Standard C37.04, all values apply for polyphase and line-to-line faults. For single phase-to-ground faults, the specific conditions stated in 04-4.5.2.3 of American National Standard C37.04 shall apply.

(6) The ratings in this column are based on 60 hertz and are the maximum time intervals to be expected during a circuit breaker opening operation between the instant of energizing the trip circuit and interruption of the main circuit of the primary arcing contacts under certain specific conditions. The values may be exceeded under certain conditions as specified in 04-4.8 of American National Standard C37.04.

(7) Current values in this column are not to be exceeded even for operating voltages below rated maximum voltage.

(8) Current values in this column are independent of operating voltages up to and including rated maximum voltage.

(9) If currents are to be expressed in peak amperes, multiply the values in this column by a factor of 1.69 which is a ratio of 2.7/1.6.

Suggested Standard for Future Design 3-12-1975.

9009279 0004128 438

Copyright National Electrical Manufacturers Association
Provided by IHS under license with NEMA
No reproduction or networking permitted without license from IHS

Not for Resale

Table 2-2
Schedule of Preferred Ratings for Indoor Oilless Circuit Breakers (Symmetrical Current Basis of Rating)
(Suggested Standard for Future Design) *

	Identification	Rated Values								Related Required Capabilities		
		Voltage		Insulation Level		Current				Current Values		
				Rated Withstand Test Voltage								
Line No.	Nominal Voltage Class (1) kV, rms	Rated Maximum Voltage (2) kV, rms	Rated Voltage Range Factor, K	Low Frequency kV, rms	Impulse kV, Crest	Rated Continuous Current at 60 Hz (4) Amperes, rms	Rated Short-circuit Current (at Rated Maximum kV) (5) kA, rms	Rated Interrupting Time (6) Cycles	Rated Permissible Tripping Delay, Y Seconds	Rated Maximum Voltage Divided by K kV, rms	Maximum Symmetrical Interrupting Capability (7) K Times Rated Short-circuit Current kA, rms	3 Second Short-time Current Carrying Capability (8) K Times Rated Short-circuit Current kA, rms	Closing and Latching Capability 1.6 K Times Rated Short-circuit Current (8) (9) kA, rms
	Col. 1	Col. 2	Col. 3	Col. 4	Col. 5	Col. 6	Col. 7	Col. 8	Col. 9	Col. 10	Col. 11	Col. 12	Col. 13
1	34.5	38	1.0			1200	20	3	2	38	20	20	32
2	34.5	38	1.0			2000	20	3	2	38	20	20	32
3	34.5	38	1.0			1200	25	3	2	38	25	25	40
4	34.5	38	1.0	(3)	(3)	2000	25	3	2	38	25	25	40
5	34.5	38	1.0			1200	31.5	3	2	38	31.5	31.5	51
6	34.5	38	1.0			2000	31.5	3	2	38	31.5	31.5	51
7	34.5	38	1.0			3000	31.5	3	2	38	31.5	31.5	51

* For NEMA Standard ratings, see American National Standard C37.06, Table 2.

9006279 0004129 274

Copyright National Electrical Manufacturers Association
Provided by IHS under license with NEMA
No reproduction or networking permitted without license from IHS

NOTES TO TABLE 2-2:

For service conditions, definitions, and interpretation of ratings, tests, and qualifying terms, see American National Standards C37.04, C37.04a, C37.04b, C37.09 and C37.09a.

The interrupting ratings are for 60-hertz systems. Applications on 25-hertz systems should receive special consideration.

(1) For reference only.

(2) The voltage rating is based on American National Standard C84.1, where applicable, and is the maximum voltage for which the circuit breaker is designed and the upper limit for operation.

(3) For dielectric test values, refer to Table 5 of American National Standard C37.06.

(4) The 25-hertz continuous current ratings in amperes are given herewith following the respective 60-hertz rating: 1200-1400; 2000-2250; 3000-3500.

(5) With the limitation stated in 04-4.5 of American National Standard C37.04, all values apply for polyphase and line-to-line faults. For single phase-to-phase faults, the specific conditions stated in 04-4.5.2.3 of American National Standard C37.04 shall apply.

(6) The ratings in this column are based on 60 hertz and are the maximum time intervals to be expected during a circuit breaker opening operation between the instant of energizing the trip circuit and interruption of the main circuit of the primary arcing contacts under certain specific conditions. The values may be exceeded under certain conditions as specified in 04-4.8 of American National Standard C37.04.

(7) Current values in this column are not to be exceeded even for operating voltages below rated maximum voltage.

(8) Current values in this column are independent of operating voltages up to and including rated maximum voltage.

(9) If currents are to be expressed in peak amperes, multiply the values in this column by a factor of 1.69 which is a ratio of 2.7/1.6.

Suggested Standard for Future Design 11-8-1973, revised 3-12-1975.

9004279 0004130 096
Not for Resale

9009279 0004131 T22

Part 3
FUNCTIONAL COMPONENTS AND REQUIREMENTS

SG 4-3.01 APPLICABLE AMERICAN NATIONAL STANDARDS

American National Standards C37.06, C37.6, C37.11, C37.12, C37.20 and C76.1 have been approved by NEMA and, with the following additions, constitute Part 3 of this publication.

NEMA Standard 11-16-1967, revised 3-12-1975.

SG 4-3.02 FRAME-MOUNTED INDOOR OIL CIRCUIT BREAKERS

Frame-mounted indoor oil circuit breakers shall have the following design features:

1. Operating mechanism shall be trip free and mounted on a frame and mechanically connected to the circuit breaker.
2. Auxiliary switch.
3. Framework high enough to permit the removal of tanks when the circuit breaker is in the closed position.
4. Closing relay mounted and wired for electrically operated circuit breakers.
5. Terminal blocks for terminating all standard control circuits.
6. Rectifier for alternating-current-operated circuit breakers, if required.
7. Control wiring, wired from control devices to terminal blocks.
8. Terminal connectors.
9. Uninhibited or inhibited insulating oil.
10. Position indicator.
11. Top frames and oil tanks with the design details shown in Table 3-1.

NEMA Standard 12-9-1938, revised 4-11-1940; 1-7-1941; 10-29-1943; 9-17-1953; 11-12-1953; 1-16-1957; 11-16-1967; 3-12-1975.

Table 3-1

	Provision for Draining Oil			Oil Level Indicators			Provision for Filling with Oil	
Line No. *	Plug	Sampling Cock	Valve Size, Inches	Oil Line	Oil Gauge	Other Devices	Plug Size, Inches	Other Means
1	None	None	None	Yes	No	None	None	By removing tank
2	"	"	"	"	"	"	"	"
3	None	None	None	Yes	No	None	1	By removing tank
4	"	"	"	"	"	"	"	"
5	"	"	"	"	"	"	"	"
6	None	None	1/2	Yes	No	None	1	By removing tank
7	"	"	"	"	"	"	"	"
8	None	None	1/2	Yes	No	None	1	By removing tank
9	None	None	1	Yes	No	None	1	By removing tank
10	"	"	"	"	"	"	"	"

* Line numbers refer to Table 1 of American National Standard C37.06.

Copyright National Electrical Manufacturers Association
Provided by IHS under license with NEMA
No reproduction or networking permitted without license from IHS
Not for Resale

SG 4-3.03 INDOOR STATION-TYPE COMPRESSED-AIR-BLAST CIRCUIT BREAKERS

Indoor station-type compressed-air-blast circuit breakers shall have the following design features:

1. Three stationary mounted single-throw circuit breaker pole units (see par. A).

2. A compressed air operating mechanism with air receiver (see par. B and C).

3. A grounded metal housing enclosing all live parts of the circuit breaker except bushing terminals with each pole unit being enclosed in a separate compartment of the housing. This housing shall support the operating mechanism which shall be separated from all live parts by barriers (see par. D).

A. Pole Units

Each pole unit shall consist of an interrupter supplied, during a circuit interruption, with compressed air derived from a compressor and air storage system (located apart from the circuit breaker) which may be used to supply a plurality of circuit breakers.

B. Operating Mechanism

The operating mechanism shall:

1. Be pneumatically actuated from the same compressed air supply as the circuit breaker pole units.

2. Be trip free.

3. Be controlled electrically from a direct-current control power source by means of an electrically trip-free nonpumping control system arranged so that a momentary closing or tripping impulse from the control switch or protective relaying system will result in a complete closing or opening operation. The electrical control system shall operate successfully within the range of control voltages specified in American National Standard C37.06. The circuit breaker shall meet specified operating times with rated control voltage applied to the electrical control system.

4. Have an air receiver conforming to the ASME "Boiler Construction Code for Unfired Pressure Vessels*," having sufficient air capacity to perform a CO + 15 second + CO duty cycle starting with normal pressure without replacement of air and equipped with:

   (a) A pressure gauge.

   (b) A safety valve set at approximately 120 percent of normal operating pressure.

   (c) A manually operated blow-down valve.

   (d) An incoming air check valve.

   (e) An air supply shut-off valve.

   (f) An alarm pressure switch set to close its contacts at approximately 110 percent of minimum operating pressure.

   (g) A lockout pressure switch which will prevent the electrical control system from attempting to close the circuit breaker when the air pressure is below the minimum value required to complete a CO operation at full interrupting rating.

   (h) A lockout pressure switch which will prevent the electrical control system from attempting to open the circuit breaker when the air pressure is below the minimum value required to complete an opening operation at full interrupting rating. As an alternative, this switch may cause the circuit breaker to be opened automatically when the pressure drops to this minimum value.

   (i) All necessary piping.

* State and local requirements at the point of original installation should be considered. Copies of the ASME Code are available from the American Society of Mechanical Engineers, 345 East 47th Street, New York, N.Y. 10017.

Copyright National Electrical Manufacturers Association
Provided by IHS under license with NEMA
- No reproduction or networking permitted without license from IHS
Not for Resale

9009279 0004133 8T5

5. Be equipped with a 10-circuit auxiliary switch, the contacts of which are individually adjustable to be normally open (a) or normally closed (b) as required.

6. Have necessary electrically operated valves for the electrical control system.

7. Have a double-pole fused knife switch, fuse pullout, or thermal circuit breaker for protection of the control circuits.

8. Have complete wiring and terminal blocks for the control system.

9. Have a conveniently located manual trip device protected against accidental operation.

10. Have a local control switch for operating the circuit breaker from the mechanism control panel.

11. Have a readily visible mechanical indicator to show the open and closed positions of the circuit breaker.

12. Have a readily visible operation counter.

13. Be arranged so that, by means of a maintenance operating device, one man can slowly open and close the circuit breaker for inspection and adjustment after the air supply shut-off valve has been closed and the air exhausted from the air receiver.

C. Compressor and Air Storage System

The air storage and compressor capacity shall be sufficient to insure that the required circuit breaker operations are not limited by an inadequate air supply.

Each compressor and air storage unit shall consist of:

1. An air compressor.

2. An air receiver conforming to the ASME "Boiler Construction Code for Unfired Pressure Vessels."

3. A safety valve.

4. A blow-off or drain valve.

5. Necessary shut-off and check valves.

6. A pressure reducing valve.

7. A motor control pressure switch.

8. An alarm pressure switch.

9. Pressure gauges for both sides of the reducing valve.

10. A motor controller.

11. Necessary wiring.

12. Necessary piping to interconnect the compressor, air receiver and all valves, gauges and pressure switches.

D. Breaker Housing

1. The housing shall completely enclose in grounded metal all live parts of the circuit breaker except the bushing terminals.

2. Each pole unit shall be enclosed in a separate metal compartment provided with bushings and provision for mounting one bushing-type current transformer conforming to the rating and performance standards given in American National Standard C37.20 on each bushing.

3. The secondary leads of each multiratio current transformer shall have a separate terminal block.

4. Access to live parts for maintenance shall be through doors interlocked (either mechanically or through key interlocks) with circuit breaker isolating switches in a manner which will insure that such access cannot be gained unless all live parts are de-energized.

5. The housing shall be grounded through connections and a ground bus of sufficient size to carry current equal to the short-time ratings of the circuit breaker.

NEMA Standard 11-12-1953, revised 11-16-1967; 3-12-1975.

Copyright National Electrical Manufacturers Association
Provided by IHS under license with NEMA
No reproduction or networking permitted without license from IHS
Not for Resale

9009279 0004134 731

SG 4-3.04 INDOOR OILLESS CIRCUIT BREAKERS

Indoor oilless circuit breakers shall have the following design features:

1. A three-pole single-throw circuit breaker.

2. Necessary barriers or covers to permit the use of the circuit breaker in metal-enclosed switchgear.

3. Grounding means to permit the use of the circuit breaker in metal-enclosed switchgear.

4. An operating mechanism which will:

   a. Be power operated and electrically controlled.

   b. Be trip free.

   c. Be equipped with necessary auxiliary switches.

   d. Have a readily visible operation counter.

   e. Have a readily visible mechanical indicator to show the open and closed position of the circuit breaker.

   f. Have a conveniently located manual trip device protected against accidental operation.

   g. Be completely wired for electrical control with all wiring brought to suitable terminal points.

   h. Be so designed that a man can slowly operate the contacts so that the circuit breaker may be adjusted.

NEMA Standard 9-18-1957, revised 11-16-1967; 3-12-1975.

SG 4-3.05 TANK-TYPE OUTDOOR OIL CIRCUIT BREAKERS

Tank-type oil circuit breakers shall have the following design features:

1. Operating mechanism (see SG 4-3.08).

2. Framework (for frame-mounted circuit breakers) high enough to permit the removal of tanks when the circuit breaker is in the closed position.

3. Bushings having characteristics in accordance with American National Standard C76.1 (except that dimensions given for bushings in C76.1 do not apply to distribution-class circuit breakers shown in lines 1, 2, 3 and 4 in Table 3 of C37.06 or to circuit breakers rated 2000, 3000, and 4000 amperes at 15.5 and 38 kV as shown in Table 3 of C37.6). Capacitance tap connections shall be included in all bushings with an insulation class of 115 kV and above. Circuit breakers using interchangeable bushings having dimensions in accordance with American National Standard C76.1 shall have bushing access holes adequate in diameter to accommodate the maximum "P" dimension listed in C76.1 for those bushings.

4. Uninhibited or inhibited insulating oil.

5. Oil level indicator.

6. Six relaying bushing-type current transformers except that distribution-class circuit breakers shown in Lines 1, 2, 3 and 4 in Table 3 of American National Standard C37.06, shall have three transformers. Bushing-type current transformers of circuit breakers used with interchangeable bushings as listed in American National Standard C76.1 shall have an inside diameter adequate to accommodate the maximum "D" dimension listed in C76.1 for those bushings.

7. Bushing current transformer conduit connections and leads to terminal blocks.

8. Position indicator.

9. Hold-down means, other than anchor studs or inserts.

10. Special tools (including maintenance closing device if required).

Copyright National Electrical Manufacturers Association
Provided by IHS under license with NEMA
No reproduction or networking permitted without license from IHS
Not for Resale

11. Grounding facilities as listed in American National Standard C37.12.

12. Top frames and oil tanks with design details in accordance with Table 3-2, Page 6.

NEMA Standard 8-26-1948, revised 9-17-1953; 11-12-1953; 9-13-1955; 1-16-1957; 3-11-1959; 5-15-1961; 3-14-1963; 11-16-1967; 3-12-1975.

SG 4-3.06 OUTDOOR OILLESS CIRCUIT BREAKERS

Outdoor oilless circuit breakers shall have the following design features:

1. Operating mechanism (see SG 4-3.08).

2. Weatherproof system of insulation and termination for the interrupters, including a coordinated mechanism with isolating means separating the high voltage and control portions.

3. A minimum of three relaying-type current transformers for circuit breakers in accordance with Table 4 of American National Standard C37.06.

4. Conduit or protected wireway leading the current transformer secondary leads to terminal blocks.

5. Position indicator.

6. Hold-down means, other than anchor studs or inserts.

7. Special tools (including maintenance closing device if required).

8. Grounding facilities as listed in American National Standard C37.12.

NEMA Standard 3-12-1975.

SG 4-3.07 COMMON MOUNTING BASE

The common mounting base for floor-mounted circuit breakers shall maintain proper spacing and alignment of the pole units during manufacture and installation.

NEMA Standard 5-24-1954, revised 11-16-1967; 3-12-1975.

(Continued)

It is not to be inferred that the mounting base can serve in place of a permanent foundation for the circuit breaker in service. Similarly, it should not be inferred that an oil circuit breaker can be transported when it is filled with oil.

Authorized Engineering Information 3-12-1975.

SG 4-3.08 OPERATING MECHANISMS FOR OUTDOOR CIRCUIT BREAKERS

A. All Operating Mechanisms

The types of operating mechanisms used differ in the means used for obtaining the power required to close a circuit breaker. The following general features apply to all types.

The mechanism shall be trip free, and its electrical control shall meet the requirements of American National Standard C37.11.

The control voltages and their ranges for closing and tripping shall be in accordance with Table 8 of American National Standard C37.06 and shall apply to all electrically operated devices involved in the operation of the mechanisms. Specified operating times are obtained with rated control voltage on the devices.

All moving parts in the operating mechanism shall be made free from objectionable friction due to corrosion or galling of pins, shafts, bushings, etc., by the use of material in the proper corrosion resistance and nongalling combinations properly protected. A conventional means for applying lubricant is to be provided where required.

The operating mechanism shall be mounted and enclosed in weatherproof housings whose doors are so arranged as to make accessible parts of the mechanism usually requiring inspection or maintenance. Each housing shall have a removable conduit plate or sufficient conduit knockouts for bringing in conduit.

Each mechanism shall have auxiliary switches as required.

The wiring for all control devices shall be included and shall terminate on readily accessible terminal blocks adjacent to incoming conduit.

Copyright National Electrical Manufacturers Association
Provided by IHS under license with NEMA
No reproduction or networking permitted without license from IHS
Not for Resale

Copyright National Electrical Manufacturers Association
Provided by IHS under license with NEMA
No reproduction or networking permitted without license from IHS
Not for Resale

9009279 0004136 504

Table 3-2

Rated Maximum Voltage, kV	Size of Valve for Draining Oil, Inches	Size of Pipe for Filling With Oil, Inches	Grounding Pad (1)	Gas and Oil Seal (2)	Provision for Travel Recorder Connection	Provision for Two Bushing-current Transformers per Bushing	Tank Manholes	Aligning Marks (3)	Step Rings (4)	Provision for Potential Devices
15.5 and 25.8 *	1/2	1/2	Yes	Yes	Yes	No	...	...	...	...
15.5 †	1	1	Yes	Yes	Yes	Yes	...	...	...	...
38	1	1	Yes	Yes	Yes	Yes	...	...	...	...
48.3	1	1	Yes	Yes	Yes	Yes	...	...	...	...
72.5	1	1	Yes	Yes	Yes	Yes	‡	‡	‡	...
121	2	1 1/2	Yes	Yes	Yes	Yes	Yes	Yes	Yes	Yes
145	2	1 1/2	Yes	Yes	Yes	Yes	Yes	Yes	Yes	Yes
169	2	1 1/2	Yes	Yes	Yes	Yes	Yes	Yes	Yes	Yes
242	2	1 1/2	Yes	Yes	Yes	Yes	Yes	Yes	Yes	Yes

(1) Consists of a flat surface 2 1/2 x 4 inches with two holes on 1 3/4 inch centers for 1/2 inch bolts.
(2) This is a seal between the circuit breaker tank structure and the operating mechanism housing.
(3) Aligning marks, when required, assist in the correct alignment of the circuit breaker during installation.
(4) Step rings provide footholes for personnel on the inside bottom of oil tanks during installation and maintenance.

* Lines 1, 2, 3 of Table 3 in American National Standard C37.06, and Line 4 of Table 3 in American National Standard C37.6.
† Lines 1, 2, 3 of Table 3 in American National Standard C37.6.
‡ Where 72.5-kV circuit breakers are designed for base mounting, tank manholes, aligning marks and step rings are included.

To reduce condensation, each housing shall have a continuously operating heater, 115 or 230 volts alternating current.

Each mechanism shall have an operation counter.

For purposes of inspection and adjustment, means shall be provided for manual closing of the circuit breaker at a conveniently accessible place. The maintenance closing device shall be such that the contacts can be operated slowly by one man to adjust the circuit breaker when it is not in service.

B. For Solenoid Mechanisms Only

The circuit breaker shall be closed by the electrical power of a closing solenoid.

The mechanism shall be suitable for a closing control and power supply voltage of 125 or 250 volts direct current or 230 volts alternating current and for a tripping supply voltage of 48, 125, or 250 volts direct current within the ranges given in Table 8 of American National Standard C37.06.

The transient voltage due to the interruption of the closing coil current shall be limited to 1500 volt crest.

C. For Pneumatic Mechanisms Only

The circuit breaker shall be closed by the compressed air power of a closing air cylinder and piston.

The mechanism shall be suitable for a closing control voltage of 125 or 250 volts direct current and for a tripping supply voltage of 125 or 250 volts direct current within the ranges given in Table 8 of American National Standard C37.06.

The mechanism shall have its own air compressor equipment consisting of an air compressor, air storage tank, necessary control, piping and valves. The air storage tank may be located within the enclosing housing or adjacent to it.

The air compressor shall have a compressor motor, 115 or 230 volts alternating current single phase or 230 volts alternating current three phase. The motor and compressor shall be of sufficient size to charge the storage system from its minimum operating pressure to normal operating pressure in 30 minutes. The air compressor shall be equipped with a suitable filter for dirt removal. The air compressor shall be equipped with an automatic control to maintain normal operating pressure. The control shall maintain not more than a variation of 15 psi for systems up to 200 psi and 20 psi for systems up to 300 psi without circuit breaker operation.

The air storage tank shall be of sufficient size to permit closing the circuit breaker at least five times without compressor operation. The tank shall conform to the ASME "Boiler Construction Code for Unfired Pressure Vessels*." A manually operated valve shall provide for draining condensed moisture and oil from the lowest point of the air system. The air tank shall be equipped with a safety relief valve set at approximately 20 percent above the normal operating pressure. Pressure switches shall (1) give alarm indication when the pressure drops to a value approximately 10 percent above the minimum operating pressure of the mechanism and (2) prevent the mechanism from attempting a closing operation when the pressure is too low to complete the operation by opening up the closing control circuit. These features may be combined into one device.

Auxiliary heater units 120 or 240 volts alternating current shall be located to provide, where necessary, heat for valves, compressor and mechanism parts for satisfactory operation down to an ambient temperature of minus 30°C.

Means shall be provided between the air receiver and mechanism to prevent operation of the mechanism pneumatically when maintenance work is being done. This should shut off the air supply and may be arranged to exhaust the air from the mechanism.

* State and local requirements at the point of original installation should be considered. Copies of the ASME Code are available from the American Society of Mechanical Engineers, 345 East 47th Street, New York, N. Y. 10017.

Copyright National Electrical Manufacturers Association
Provided by IHS under license with NEMA
No reproduction or networking permitted without license from IHS
Not for Resale

D. For Motor-operated Spring-charged Mechanisms Only

The circuit breaker shall be closed by the stored energy of charged springs.

The mechanism shall be suitable for one of the control voltages listed in Table 8 of American National Standard C37.06.

Means shall be provided to prevent operating the mechanism when maintenance work is being done.

The mechanism shall be so arranged that emergency manual charging and release of the springs is possible without electrical operation.

On stored-energy mechanisms, a position indicator shall indicate the state of energy in the storage device. The word "charged" in black print on a yellow background shall be used; "discharged" in black print on a white background may be used where applicable.

E. For Hydraulic Mechanisms Only

The circuit-breaker shall be closed by energy prestored in a compressed and completely confined gas and transmitted through the medium of a liquid, usually oil.

The mechanism shall be suitable for one of the control voltages listed in Table 8 of American National Standard C37.06.

Each mechanism shall have its own hydraulic equipment consisting of a pump, accumulator, necessary control, piping and valves.

The pump and associated motor shall be of sufficient size to charge the accumulator from its minimum hydraulic operating pressure to normal hydraulic operating pressure in 20 to 30 minutes.

The hydraulic pump shall be equipped with an automatic control to maintain normal hydraulic operating pressure.

The accumulator shall be of sufficient size to permit closing the circuit breaker five times without operation of the hydraulic pump. The hydraulic system shall be equipped with a safety relief valve set at approximately 20 percent above the normal hydraulic operating pressure.

An alarm pressure switch shall close when the hydraulic pressure drops to a value approximately 10 percent above the minimum operating pressure of the mechanism. A lockout pressure switch shall prevent the mechanism from attempting a closing operation when the hydraulic pressure is too low to complete the operation. (These functions may be combined into one device.)

One manually operated valve shall provide for closing the circuit breaker hydraulically from the mechanism housing.

NEMA Standard 7-10-1942, revised 12-17-1947; 11-12-1953; 1-16-1957; 11-16-1967; 3-12-1975.

SG 4-3.09 THREAD DIMENSIONS FOR TERMINAL STUDS

The thread dimensions for terminal studs for circuit breakers shall be in accordance with Table 3-3.

NEMA Standard 9-13-1955, revised 1-26-1960; 3-12-1975.

Table 3-3

Stud Diameter, Inches	Number of Threads per Inch	Thread Class	Length of Stud, Inches	Minimum Length Usable Thread, Inches
3/4	16	UNF-2A	2	1 1/2
1 1/8	12	UNF-2A	2 1/2	2 1/8
1 1/4	12	UNF-2A	2 1/2	2 1/8
1 1/2	12	UNF-2A	2 1/2	2 1/8
1 3/4	12	UNF-2A	2 1/2	2 1/8
2	12	UN-2A	3	2 1/2
2 1/2	12	UN-2A	3	2 1/2

Copyright National Electrical Manufacturers Association
Provided by IHS under license with NEMA
No reproduction or networking permitted without license from IHS
Not for Resale

9009279 0004139 213

SG 4-3.10 INSTRUMENT CURRENT TRANSFORMERS

(NOTE—During the revision and updating of this Publication No. SG 4-1975, it was recognized that SG 4-3.08, SG 4-3.09 and SG 4-3.10 in Publication No. SG 4-1968 did not truly reflect all types of instrument current transformers used with circuit breakers. The timing required to issue an up-to-date publication, however, prevented the inclusion of the work in progress on the proposed American National Standard C37.077. Therefore the following section SG 4-3.10 is included in this publication until C37.077 is promulgated and included as part of SG 4-1975.)

This standard is a supplement to American National Standard C57.13 to cover those requirements peculiar to current transformers used on or with circuit breakers. It does not apply to indoor circuit breakers used in power switchgear assemblies in accordance with American National Standard C37.20.

These current transformers shall be of one of the following types:

1. Bushing-type current transformer.
2. Wound-type current transformer.
3. Eye-type current transformer.

Wound-type and eye-type current transformers, when used with circuit breakers rated 121 kV and above, shall be of the one-turn single-primary multi-secondary type with provision for four secondary coils.

Wound-type and eye-type current transformers, when used with circuit breakers rated 72.5 kV and below, shall meet the requirements of this standard; however, requirements covering the number of primaries and secondaries, the current ratios, and accuracy class ratings have not yet been established.

A. Ratings

The rating of a current transformer used for alternating-current high-voltage circuit breakers shall include those terms used in American National Standard C57.13 and the following additional terms:

Maximum voltage.
Dielectric strength.
Thermal short-time current capability.

1. Ratings Applicable to All Types of Current Transformers—

   a. Continuous Thermal Current Capability. The continuous thermal current capability of a current transformer shall be equal to the rated continuous current of the circuit breaker with which it is used when connected on a ratio having a primary current rating equal to or greater than the continuous current rating of the circuit breaker.

   NOTE—If connection is made on a lower ratio, the circuit breaker can carry a current equal to the primary current of that ratio without causing overheating of the current transformer. Furthermore, on the lower ratio the current transformer may have some additional thermal capability. The many variables in design of both circuit breakers and current transformers are too numerous to establish additional thermal capabilities in standards, and supplemental thermal current capabilities should be obtained from the manufacturer. (This note is approved as Authorized Engineering Information.)

   b. Mechanical Short-time Current Capability. The mechanical short-time current capability of any tap of a single-ratio or multiratio current transformer shall be the lesser symmetrical current value of either (1) 120 times the rated primary current of the tap under consideration or (2) the closing and latching capability of the circuit breaker as defined in American National Standard C37.06.

   NOTE—Where item (1) is the lower value, the effects of the power system parameters, secondary burden, thermal short-time current capability, etc., should be considered in the application of current transformers. (This note is approved as Authorized Engineering Information.)

Copyright National Electrical Manufacturers Association
Provided by IHS under license with NEMA
No reproduction or networking permitted without license from IHS
Not for Resale

Table 3-4
Accuracy Class Ratings of Current Transformers for Outdoor Circuit Breakers

Breaker Ratings		Accuracy Class Ratings (1)			
		Relaying Service		Metering Service	
Maximum Voltages, kV, rms	Continuous Current, 60 Hz, Amperes, rms	Multiratio Current Transformers (2)	Accuracy Voltage Class (3)	Single-ratio Current Transformers (4)	Accuracy Class (5)
8.25 through 48.3	600	600:5	100	300:5	0.6B-0.5
	800				
	1200	1200:5	200	600:5	"
	2000	2000:5, 3000:5	400	800:5	"
	3000	4000:5, 5000:5	800		
	4000				
	5000				
72.5	1200	1200:5	400	1200:5	0.3B-0.5
	2000	2000:5, 3000:5	800	1500:5	"
				2000:5	"
				3000:5	"
121 and above	1200	1200:5, 2000:5			
	1600				
	2000	3000:5, 4000:5			
	3000	5000:5	800		
	4000				

(1) These values apply only when current transformers are used on 60-hertz circuits.

(2) These current transformers normally have a primary current rating which corresponds to the continuous current rating of the circuit breaker, except that circuit breakers rated 800 and 1600 amperes use current transformers rated 1200 and 2000 amperes, respectively.

(3) These secondary terminal voltage values for C or T classifications apply to the full winding as specified in American National Standard C57.13 for 10 percent error.

(4) Minimum ratios shall be not less than 50 percent of the continuous current rating of the circuit breaker.

(5) These values apply only to those secondary windings specified for metering service.

Copyright National Electrical Manufacturers Association
Provided by IHS under license with NEMA
No reproduction or networking permitted without license from IHS
Not for Resale

c. Thermal Short-time Current Capability. The thermal short-time current capability of any tap of a single-ratio or multiratio current transformer shall be the lesser symmetrical current value of either (1) 60 times the rated primary current of the tap under consideration for 1 second or (2) 42.5 times the rated primary current of the tap under consideration for 2 seconds or (3) the 3-second short-time current-carrying capability of the circuit breaker as defined in American National Standard C37.06.

NOTE—Although circuit breakers are required to have a 3-second short-time capability, this is a design requirement only. The 1- and 2-second capabilities are consistent with the circuit breaker ratings given in American National Standard C37.06. Where item (1) or (2) results in the lower value, the effects of the power system parameters, secondary burden, mechanical short-time current capability, etc., should be considered in the application of current transformers. (This note is approved as Authorized Engineering Information.)

d. Accuracy Class Ratings. The accuracy class ratings of current transformers at standard burdens shall be as shown in Table 3-4.

e. Nameplates. Bushing-type current transformers shall have nameplates which meet the requirements of 5.3 in American National Standard C37.04.

Wound-type and eye-type current transformers shall have nameplates that contain the following data, as applicable. The requirements of 4.8.1 of American National Standard C57.13 are included in these data.

(1) Manufacturer's name.

(2) Manufacturer's type designation.

(3) Manufacturer's serial number.

(4) Year of manufacture.

(5) Rated frequency.

(6) Rated maximum voltage.

(7) Rated impulse withstand voltage.

(8) Rated low-frequency withstand voltage.

(9) Rated switching-impulse withstand voltage.

(10) Rated primary current.

(11) Rated secondary current.

(12) Rated continuous-thermal-current factor.

(13) Rated 3-second short-time thermal current.

(14) Rated mechanical short-time current.

(15) Weight of complete current transformer.

(16) Gallons of oil or weight of gas per current transformer.

(17) Instruction book number.

(18) A connection diagram showing:
- (a) The primary terminal markings.
- (b) The position of each secondary core.
- (c) The terminal designation of each core.
- (d) The polarity markings of the primary and each core.
- (e) The turns ratio between each terminal.
- (f) The full winding ratio expressed, for example, as 3000/5 MR.
- (g) The accuracy class of each core and the ratio for which the accuracy is expressed.

f. Excitation Characteristics. The manufacturer should be consulted for typical excitation characteristics.

Copyright National Electrical Manufacturers Association
Provided by IHS under license with NEMA
No reproduction or networking permitted without license from IHS
Not for Resale

Table 3-5
Ratings of Multiratio Current Transformers for Relaying Service

Current Ratings, Amperes	Turn Ratios	Secondary Taps	Current Ratings, Amperes	Turn Ratios	Secondary Taps
	600:5			3000:5	
50:5	10:1	X2-X3	300:5	60:1	X3-X4
100:5	20:1	X1-X2	500:5	100:1	X4-X5
150:5	30:1	X1-X3	800:5	160:1	X3-X5
200:5	40:1	X4-X5	1000:5	200:1	X1-X2
250:5	50:1	X3-X4	1200:5	240:1	X2-X3
300:5	60:1	X2-X4	1500:5	300:1	X2-X4
400:5	80:1	X1-X4	2000:5	400:1	X2-X5
450:5	90:1	X3-X5	2200:5	440:1	X1-X3
500:5	100:1	X2-X5	2500:5	500:1	X1-X4
600:5	120:1	X1-X5	3000:5	600:1	X1-X5
	1200:5			4000:5	
100:5	20:1	X2-X3	500:5	100:1	X1-X2
200:5	40:1	X1-X2	1000:5	200:1	X3-X4
300:5	60:1	X1-X3	1500:5	300:1	X2-X3
400:5	80:1	X4-X5	2000:5	400:1	X1-X3
500:5	100:1	X3-X4	2500:5	500:1	X2-X4
600:5	120:1	X2-X4	3000:5	600:1	X1-X4
800:5	160:1	X1-X4	3500:5	700:1	X2-X5
900:5	180:1	X3-X5	4000:5	800:1	X1-X5
1000:5	200:1	X2-X5			
1200:5	240:1	X1-X5			
	2000:5			5000:5	
300:5	60:1	X3-X4	500:5	100:1	X2-X3
400:5	80:1	X1-X2	1000:5	200:1	X4-X5
500:5	100:1	X4-X5	1500:5	300:1	X1-X2
800:5	160:1	X2-X3	2000:5	400:1	X3-X4
1100:5	220:1	X2-X4	2500:5	500:1	X2-X4
1200:5	240:1	X1-X3	3000:5	600:1	X3-X5
1500:5	300:1	X1-X4	3500:5	700:1	X2-X5
1600:5	320:1	X2-X5	4000:5	800:1	X1-X4
2000:5	400:1	X1-X5	5000:5	1000:1	X1-X5

Copyright National Electrical Manufacturers Association
Provided by IHS under license with NEMA
No reproduction or networking permitted without license from IHS
Not for Resale

9009279 0004143 744

2. Ratings for Bushing-type Current Transformers—The rated primary and secondary current ratings for multiratio bushing-type current transformers for relaying service shall be as shown in Table 3-5. The current ratings for single-ratio bushing-type current transformers for metering service shall be 300:5, 600:5, 800:5, 1200:5, 1500:5, 2000:5 and 3000:5.

3. Ratings for Wound-type Current Transformers

   a. Rated Dielectric Strength. Insulation classes and dielectric tests shall be as shown in Table 1 of American National Standard C57.13.

      NOTE—If these current transformers are to be installed with circuit breakers, the manufacturer should be consulted because the dielectric tests and test procedures are different from those required for circuit breakers. (This note is approved as Authorized Engineering Information.)

      Wet dielectric voltage tests and creepage distances for porcelain terminals shall be as shown in Table 1A of American National Standard C57.13. Switching-impulse withstand voltage tests for voltage ratings of 362 kV and above shall be as shown in American National Standard C37.074.

   b. Rated Primary and Secondary Current. The maximum rated primary current of a wound-type current transformer shall be at least equal to the rated continuous current and the load current carrying capability of the circuit breaker with which the current transformer is to be used. Current ratings for multiratio wound-type current transformers for relaying service shall be as shown in Table 3-5. The current ratings for single-ratio current transformers for metering service shall be 300:5, 600:5, 800:5, 1200:5, 1500:5 2000:5 and 3000:5.

4. Ratings for Eye-type Current Transformers—

   a. Rated Dielectric Strength. The rated dielectric strength of an eye-type current transformer shall include the requirements of American National Standards C37.04, C37.06, C37.074 and C37.078. The maximum voltage rating of an eye-type current transformer shall be as shown in Table 4A of American National Standard C37.06.

   b. Rated Primary and Secondary Current. The rated primary and secondary current of eye-type current transformers shall be the same as that given for wound-type current transformers in par. A.3.b.

B. Construction

1. Polarity and Lead Marking—Polarity and lead marking shall be as shown in 3.7.1 of American National Standard C57.13 and in accordance with the following additional requirements.

   a. Bushing-type Current Transformers. Polarity and lead marking for bushing-type current transformers shall be as shown in Figures 3-1 and 3-2. The two leads for single-ratio current transformers such as those used for metering service shall be marked X1 and X2.

   b. Wound-type and Eye-type Current Transformers. Polarity and lead markings for multiratio and single-ratio secondaries for wound-type and eye-type current transformers shall be as shown in Figure 3-3. Single-ratio secondaries with two leads shall be marked with suitable prefix letters and suffix numbers. A fourth secondary with a single-ratio secondary for metering service shall use secondary terminal markings W1 and W2. If this fourth secondary is a multiratio secondary for relaying service, it shall use secondary terminal markings W1, W2, W3, etc.

Copyright National Electrical Manufacturers Association
Provided by IHS under license with NEMA
No reproduction or networking permitted without license from IHS
Not for Resale

As shown in Figure 3-3, H1 shall be the marked primary terminal. This terminal shall be electrically and mechanically connected to the upper structure of the current transformer. The H2 terminal shall be electrically insulated from the upper structure and from H1, and shall connect to the circuit breaker.

The general arrangement of wound-type and eye-type current transformers shall be one current transformer per pole connected to terminals 1, 3 and 5 of the circuit breaker.

2. Secondary Leads and Terminations—Secondary leads shall be brought out to accessible terminal boards with polarity, phase, and lead designations shown on suitable connection diagrams. Terminal boards shall be equipped with means for short circuiting individual secondaries. Where applicable, secondary leads shall be brought out through suitable oil- and gas-tight seals.

3. Dimensions of Bushing-type Current Transformers—Bushing-type current transformers for dead-tank oil circuit breakers used with the interchangeable bushings listed in American National Standard C76.1 shall have an inside diameter adequate to accommodate the maximum "D" dimension of the bushings.

4. Primary Terminal Connection Mechanical Loading—The maximum mechanical loading which may be applied to the primary terminal connection of a wound-type or eye-type current transformer shall equal that required for a circuit breaker terminal connection as shown in American National Standard C37.078.

5. Connection for Secondary Burdens—Secondary burdens shall be connected to bushing-type current transformers as shown in Figures 3-4 through 3-7. Similar connections shall be made for the various secondaries of wound-type and eye-type current transformers, except that all four secondaries shall be on the same side of the circuit breaker.

C. Test Procedures

The following design and production tests shall be made on instrument current transformers for use on or with circuit breakers.

1. Design Tests—The design test requirements and procedures shall be as specified in American National Standard C57.13 and the following additional requirements:

   a. When rated dielectric strength is not determined in accordance with American National Standard C57.13, the test requirements and procedures specified in American National Standards C37.09 and C37.09a shall be used.

   b. Wet dielectric tests shall be made in accordance with American National Standard C37.078. When the current transformer is part of the circuit breaker structure, the wet tests on the circuit breaker shall include the current transformer. When the current transformer is not part of the circuit breaker or when it can be set apart from the circuit breaker, the current transformer may be tested separately.

   c. Dielectric tests shall be made in accordance with American National Standards C37.09 and C37.09a. Where current transformers are closely associated with the circuit breaker, that is, mounted on the breaker-supporting structure or on separate pedestals at the end of the pole units, the dielectric tests shall be made on the combined circuit breaker and current transformer unless it can be established otherwise that there is no reduction of insulation withstand strength because of the adjacent apparatus.

   d. Switching surge withstand voltage tests shall be made in accordance with American National Standard C37.074.

Copyright National Electrical Manufacturers Association
Provided by IHS under license with NEMA
No reproduction or networking permitted without license from IHS

Not for Resale

2. Production Tests—Accuracy tests on bushing-type current transformers shall be made in accordance with American National Standard C57.13, but all other tests shall be made in accordance with American National Standard C37.09.

Tests on wound-type current transformers shall be made in accordance with American National Standard C57.13.

Accuracy tests on eye-type current transformers shall be made in accordance with American National Standard C57.13, but all other tests shall be made in accordance with American National Standard C37.09.

Wound-type and eye-type current transformers shall be considered as major insulation components of a circuit breaker and, therefore, may be tested separately to meet the low-frequency withstand voltage tests on major insulation components required by American National Standard C37.09.

NEMA Standard 3-12-1975.

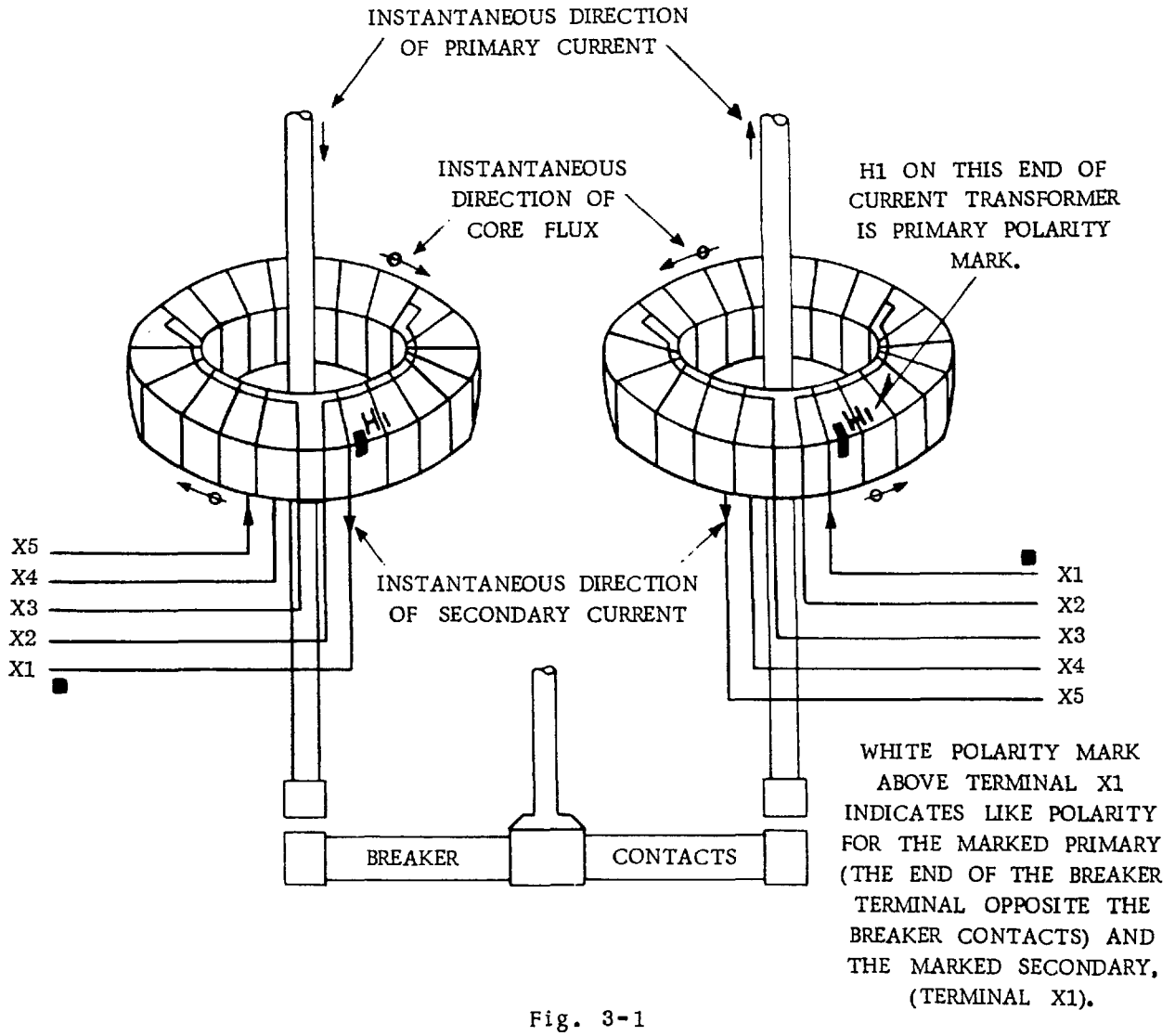

Fig. 3-1
TYPICAL ARRANGEMENT OF TWO BUSHING-TYPE CURRENT TRANSFORMERS ON ONE POLE OF DEAD-TANK-TYPE CIRCUIT BREAKERS, SHOWING TAPS AND NUMBERING SYSTEM ON CONNECTION BOARD. WHEN INTERMEDIATE TAPS ARE USED, THE TAP NUMERICALLY NEAREST X1 HAS THE SAME POLARITY AS X1.

Copyright National Electrical Manufacturers Association
Provided by IHS under license with NEMA
No reproduction or networking permitted without license from IHS
Not for Resale

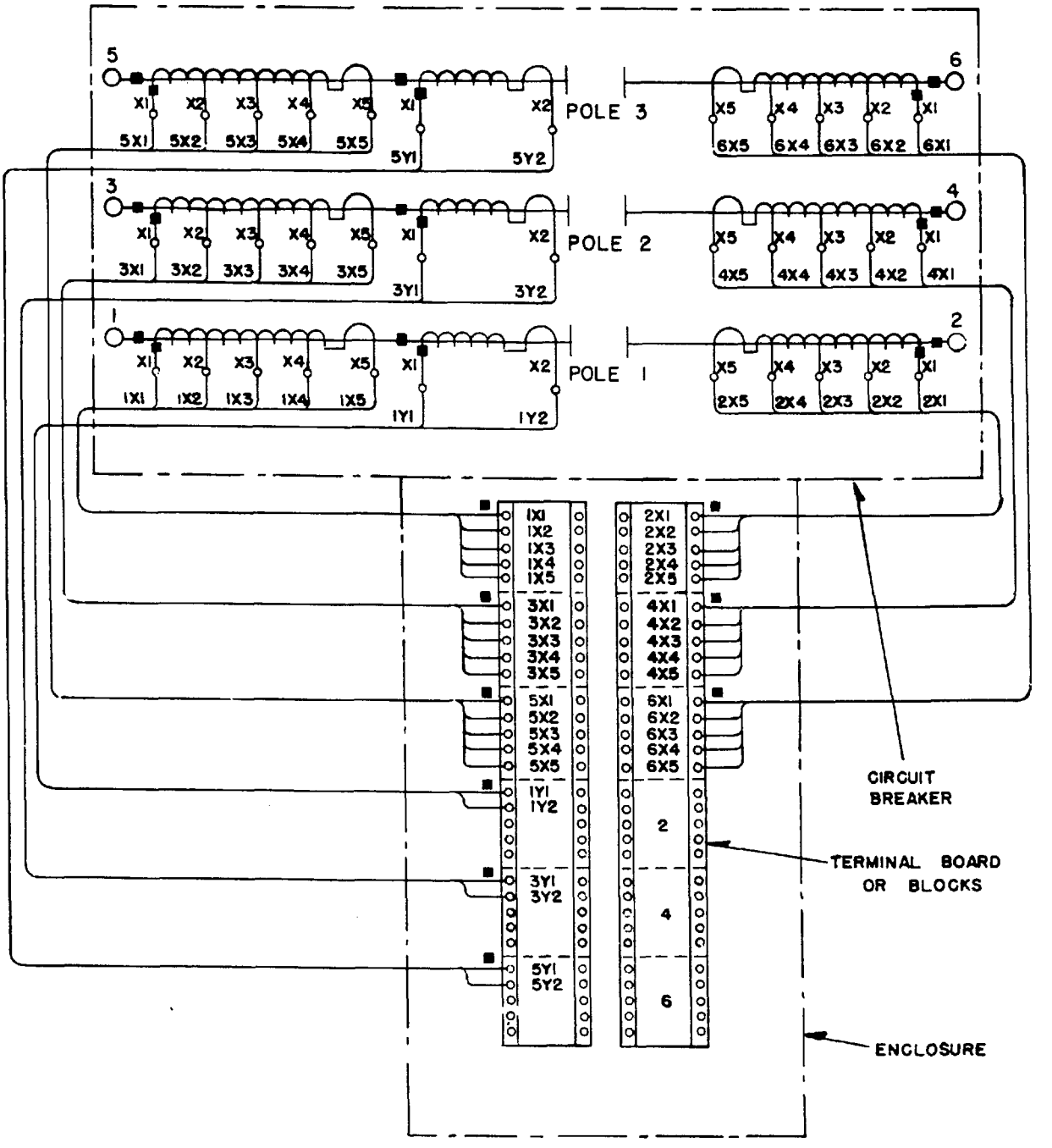

NOTE—Exact location of current transformers, leads, polarity marks and terminal blocks shall be determined from manufacturer's connection diagram or instructions.

When one current transformer per pole is used, current transformers are located on primary terminals 1-3-5 unless otherwise specified.

Fig. 3-2
CURRENT TRANSFORMER AND LEAD IDENTIFICATION OF BUSHING-TYPE CURRENT TRANSFORMERS FOR DEAD-TANK-TYPE CIRCUIT BREAKERS

Copyright National Electrical Manufacturers Association
Provided by IHS under license with NEMA
No reproduction or networking permitted without license from IHS
Not for Resale

9009279 0004147 39T

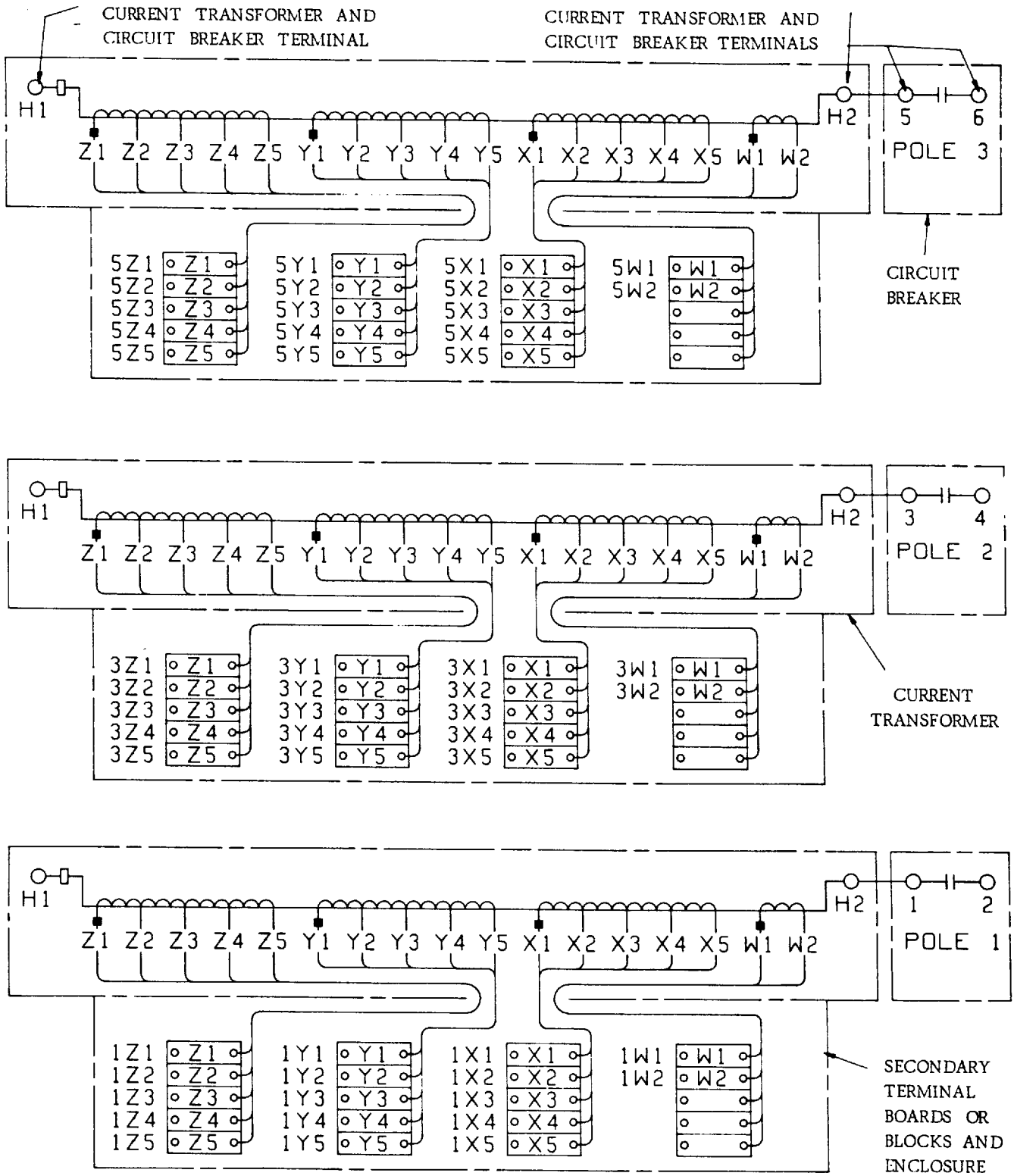

NOTE—Exact location of current transformers, leads, polarity marks and terminal blocks shall be determined from manufacturer's connection diagram or instructions.

Fig. 3-3
CURRENT TRANSFORMER AND LEAD IDENTIFICATION OF WOUND-TYPE AND EYE-TYPE CURRENT TRANSFORMERS FOR LIVE-TANK-TYPE CIRCUIT BREAKERS

Copyright National Electrical Manufacturers Association
Provided by IHS under license with NEMA
No reproduction or networking permitted without license from IHS
Not for Resale

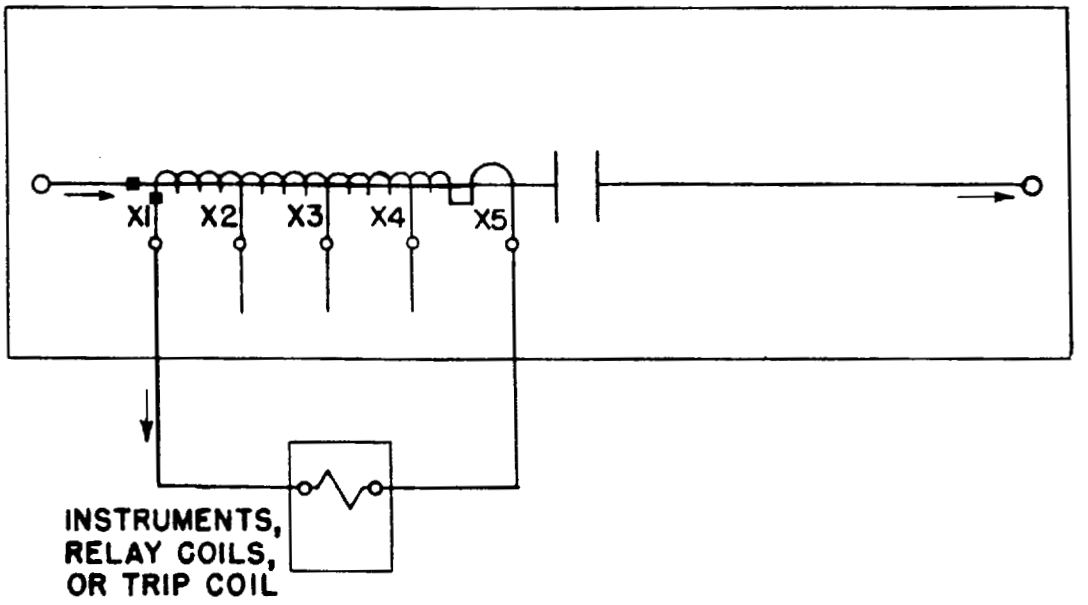

Fig. 3-4
CONNECTION OF SECONDARY BURDENS
ONE CURRENT TRANSFORMER PER BREAKER POLE

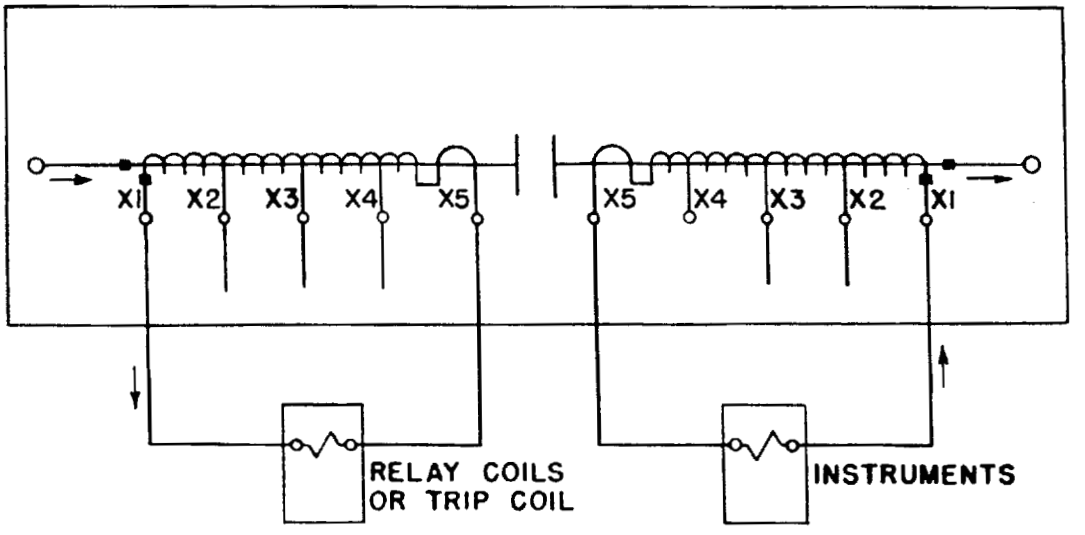

Fig. 3-5
CONNECTION OF SECONDARY BURDENS
TWO CURRENT TRANSFORMERS PER BREAKER POLE CONNECTED INDEPENDENTLY.
IT IS RECOMMENDED THAT INSTRUMENTS BE OPERATED ON A SEPARATE CURRENT TRANSFORMER.

Copyright National Electrical Manufacturers Association
Provided by IHS under license with NEMA
No reproduction or networking permitted without license from IHS
Not for Resale

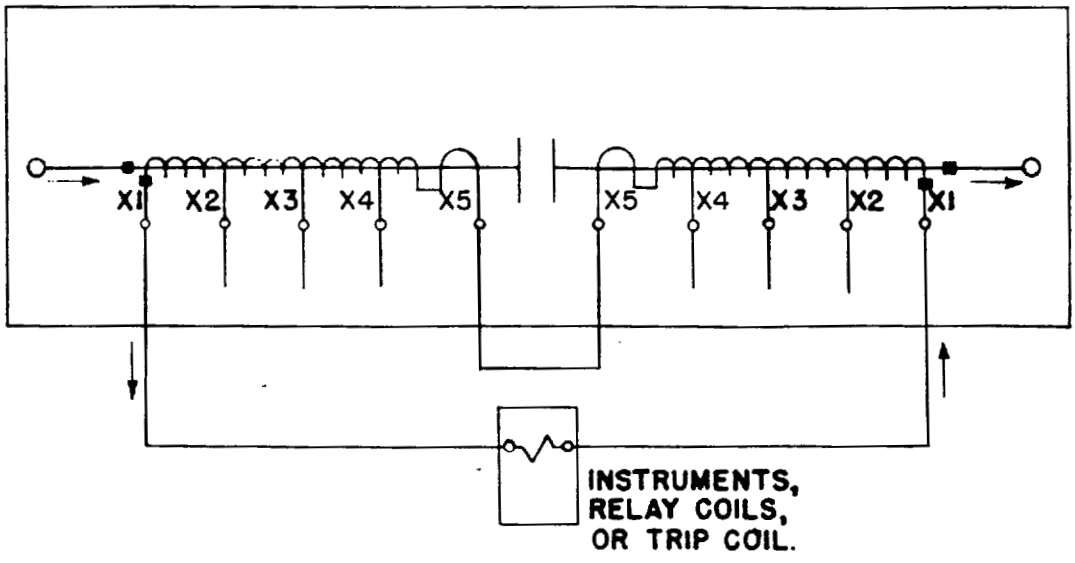

Fig. 3-6
CONNECTION OF SECONDARY BURDENS
TWO CURRENT TRANSFORMERS PER BREAKER POLE CONNECTED IN SERIES
USED WHEN BURDENS ARE LARGE

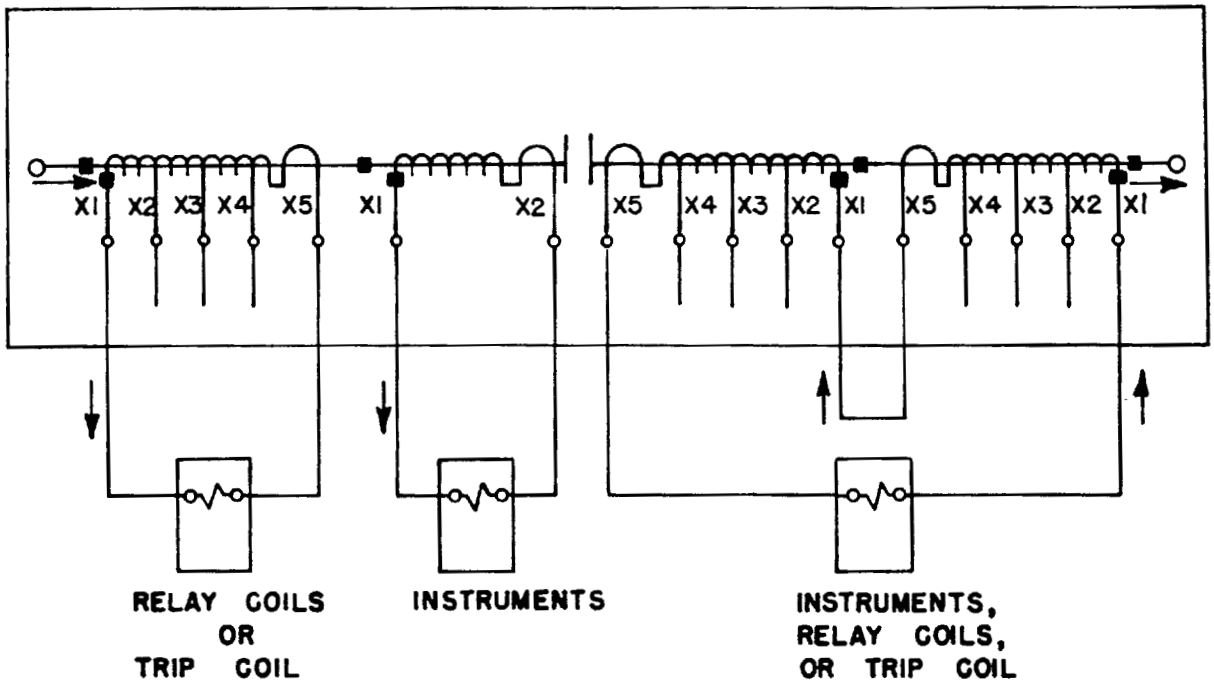

Fig. 3-7
CONNECTION OF SECONDARY BURDENS
FOUR CURRENT TRANSFORMERS PER BREAKER POLE
TWO PER TERMINAL CONNECTED INDEPENDENTLY
AND TWO PER TERMINAL CONNECTED IN SERIES

Copyright National Electrical Manufacturers Association
Provided by IHS under license with NEMA
No reproduction or networking permitted without license from IHS
Not for Resale

SG 4-3.11 BUSHING POTENTIAL DEVICES FOR TANK-TYPE OUTDOOR OIL CIRCUIT BREAKERS

A. General

Tank-type outdoor oil circuit breakers rated 115 kV and higher shall have tapped bushings and mounting provisions suitable for connecting one bushing potential device to each high-voltage bushing.

B. Construction

1. The potential device network includes a potential transformer and suitable variable inductive and capacitive reactances which permit adjustment of the output voltage to be substantially in phase and proportional to the high-voltage line-to-ground voltage impressed on the high-voltage bushing to which the potential device is connected.

2. The transformer protective gap shall be set at not less than twice the maximum continuous operating tap voltage of the potential device when operating at primary line-to-ground voltage, rated burden and rated frequency.

3. The transformer grounding switch for use in adjustment and maintenance shall be so arranged that, when closed, the point of connection of the potential device network to the high-voltage bushing is effectively grounded, thus reducing the operating tap voltage to zero, without interrupting the high-voltage line operation.

   The high-voltage bushing should not be continuously energized with the transformer grounding switch closed or with any potential device connections which will remove the voltage from the tapped portion of the bushing. Consult the manufacturer for details.

4. The potential device shall have a tapped capacitor or other equivalent means in the secondary circuit to correct the power factor of the applied burden to a net power factor of unity on the potential device. The minimum values of power-factor correction to be provided shall be in accordance with Table 3-6, in steps not greater than 3.75 volt-amperes.

5. The adjusting panel shall be conveniently located in the potential device and provided with the necessary studs for the termination of the secondary wiring and necessary switches, dials or links for obtaining output voltage and device adjustments.

6. The potential device housing containing the component parts shall be arranged for mounting on the circuit breaker with which it is to be used and near the bushing to which it is connected.

7. The potential device shall have a lead-in cable consisting of an insulated conductor with equivalent fittings for connection between the voltage tap of the bushing and the potential device network.

C. Class and Ratings

1. Potential devices for use with high-voltage bushings rated 121 kV and above shall be Class A (in-phase) devices.

2. The ratings for bushing potential devices shall be in accordance with Table 3-6. These ratings and the performance characteristics given in par. D apply to potential devices used on systems operating at 60 hertz and at the rated primary line-to-ground voltages given in Table 3-6. The ratings and performance characteristics, when the potential devices are used on systems operating at other frequencies and voltages, shall be in accordance with par. C.3 and C.4.

Copyright National Electrical Manufacturers Association
Provided by IHS under license with NEMA
No reproduction or networking permitted without license from IHS
Not for Resale

9009279 0004151 810

3. When the operating voltage of the circuit on which the circuit breaker is specified for use is the next rated circuit voltage class lower than the usual rated circuit voltage corresponding to the voltage class of the high-voltage bushing, the rated burden, in watts, shall be 80 percent of the value specified in Table 3-6, and the design shall be such that accuracy will be maintained at rated secondary voltage as shown in par. D. Where potential devices are required on systems having operating voltages below the above specified values, the manufacturer should be consulted.

4. When the system frequency of the circuit on which the circuit breaker is specified for use is 50 hertz, the rated burden, in watts, shall be 80 percent of the value specified in Table 3-6, and accuracy shall be maintained at rated secondary voltage as shown in par. D. (Where potential devices are required on systems having frequencies other than 60 or 50 hertz, the manufacturer should be consulted.)

Table 3-6
Rated Voltage Classes, Rated Burdens and Secondary Voltages for Bushing Potential Devices

Nominal Voltage Class, rms *	Rated Maximum Voltage, kV*, rms	Rated Primary Line-to-ground Voltage, kV* rms	Rated Burden Watts **	Rated Secondary Voltage, Volts	Minimum Power Factor Correction (Voltamperes Reactive) †
115	121	70	25	121 or 70	20
138	145	84	35	121 or 70	28
161	169	98	45	121 or 70	36
230‡	242	140	80	121 or 70	64
345	362	210	125	121 or 70	75

* See par. C.1, C.2 and C.3.

† See par. B.4.

‡ This device shall be used with high-voltage bushings rated 230/196 kV, and it shall have the same output and performance characteristics when energized at rated primary line-to-ground voltage of 119 kV.

* * When the potential device has extra secondary voltage windings or taps, the rated burden represents the total of the simultaneous burdens of all windings and/or taps. The rated burden for each winding and/or tap shall be as shown on the nameplate.

Copyright National Electrical Manufacturers Association
Provided by IHS under license with NEMA
No reproduction or networking permitted without license from IHS
Not for Resale

D. Performance Characteristics

The performance characteristics are given in terms of the voltage regulation and the burden regulation when the device operates at the ratings specified in par. C.2, C.3 and C.4.

1. Voltage regulation is the deviation in ratio and phase angle of the secondary voltage as a function of primary line-to-ground voltage variation over a specified range with a constant linear impedance burden. The voltage regulation shall be not greater than the following:

Variation in Primary Voltage *, Percent	Ratio Percent (Plus or Minus)	Phase Angle, Degrees (Plus or Minus)
100	1	1
25	3	3
5	5	5

* When devices are initially adjusted within these limits at rated burden, their performance will be substantially within the same limits between 90 percent and 110 percent of rated primary voltage.

2. Burden regulation is the deviation in ratio and phase angle of the secondary voltage as a function of burden variation over a specified range with a constant rated primary line-to-ground voltage. The burden regulation shall be not greater than the following:

Variation in Rated Burden †, Percent	Ratio Percent (Plus or Minus)	Phase Angle, Degrees (Plus or Minus)
100	1	1
50	6	4
0	12	8

† The device shall be initially adjusted within these limits at rated primary line-to-ground voltage.

E. Adjustment

The maximum range over which adjustment shall be required and the maximum steps of adjustment of the potential devices shall be in accordance with the following:

Maximum Range of Adjustment Required (Plus or Minus)		Maximum Steps of Adjustment	
Ratio, Percent	Phase Angle, Degrees	Ratio, Percent	Phase Angle, Degrees
5	5	1	1

F. Polarity

The relative instantaneous polarity of the primary and secondary terminals of potential devices shall be clearly indicated. Permanent markings shall be so made that they cannot be easily obliterated.

G. Nameplates

Potential devices shall be provided with nameplates which include the following minimum information:

1. Manufacturer's name or the equivalent.
2. Identification number.
3. Type and form designation or the equivalent.
4. Nominal voltage class.
5. Rated primary line-to-ground voltage.
6. Secondary voltage ratings.
7. Rated burden of each secondary voltage winding and total simultaneous burden.
8. Rated frequency.
9. Device class.
10. Instruction book number.
11. Weight.

NEMA Standard 3-22-1945, revised 11-16-1967; 3-12-1975.

SG 4-3.12 UNDERVOLTAGE TRIP DEVICE

The dropout voltage range of an undervoltage trip device shall be 30 to 60 percent of its voltage rating for both direct- and alternating-current applications.

Copyright National Electrical Manufacturers Association
Provided by IHS under license with NEMA
No reproduction or networking permitted without license from IHS
Not for Resale

An electrically-reset undervoltage trip device shall pick up, and a mechanically-reset undervoltage trip device shall seal in, at 85 percent or less of its rated voltage.

NOTE—An undervoltage trip is a device in which the coil is energized without an auxiliary switch. The armature may be released for tripping at any point in the closing stroke of the circuit breaker.

NEMA Standard 1-7-1941, revised 9-17-1953; 3-12-1975.

SG 4-3.13 SECONDARY AND CONTROL WIRING (SMALL WIRING)

Wire sizes for instrument current transformer secondary leads shall be stranded copper and not smaller than 14 AWG. Wire for instrument potential transformer secondary leads and for control wiring shall be stranded copper and shall be electrically coordinated with the inherent current requirements and voltage drop limitations of the circuit, and mechanically coordinated and designed for its intended application in the circuit breaker. The wire ends shall be permanently fitted with pressure-type connectors before attaching to terminal studs. Splices, when required, shall be brazed or made by permanently fitted pressure-type connectors.

NEMA Standard 11-12-1953, revised 11-16-1967; 3-12-1975.

SG 4-3.14 PRESSURIZED FIBERGLASS-REINFORCED-PLASTIC COMPONENTS

All fiberglass-reinforced-plastic gas storage bottles, receivers and pressure vessels which neither electrically isolate nor separate high-voltage elements of 1000 volts or higher shall be designed to meet the requirements of the ASME "Boiler and Pressure Vessel Code—Section X—Fiberglass-reinforced Plastic Pressure Vessels*," and of any state and local codes which apply at the point of original installation.

All pressurized vessels, insulators and tubes which consist of fiberglass-reinforced plastic material, which electrically isolate or separate high-voltage elements of 1000 volts or higher, which have an internal or external gas pressure exceeding 15 psig, and which have an inside diameter exceeding 6 inches shall be individually tested in accordance with par. C and D of SG 4-4.05. This does not apply to the arc interrupter elements which are normally pressurized momentarily by arcing action during the interruption period only.

Each fiberglass-reinforced-plastic component covered by this standard shall be marked to show that it has been subjected to the production test procedure although this marking need not be visible in the final assembly.

NEMA Standard 9-20-1968, revised 3-22-1972; 3-12-1975.

SG 4-3.15 PRESSURIZED SYSTEMS

Each gas system on a circuit breaker shall have an ASME approved safety or relief valve set to blow at a pressure not exceeding the maximum allowable working pressure of the system. Such a valve shall be designed to prevent the pressure from rising more than 10 percent above the maximum allowable working pressure, except when the excess pressure is caused by exposure to fire or to other abnormal sources of heat.

When the gas system which includes pressurized fiberglass-reinforced-plastic components may be subjected to substantial rates-of-rise of pressure caused by exposure to abnormal events or sources of heat for which the above safety or relief valve is not adequate, additional overpressure relief set at 20 percent above the maximum allowable working pressure shall be provided by one of the following, or its equivalent:

1. Rupture diaphragm.
2. Large area relief piston.
3. Spring clamped construction.

When a pressurized metal vessel of an interconnected system of metal and fiberglass-reinforced-plastic elements is provided with a device qualifying under the above, this device may be used to protect the interconnected system. Any fiberglass-reinforced-plastic vessel which is pressurized shall be protected by the overpressure relief device.

NEMA Standard 9-20-1968, revised 3-22-1972; 3-12-1975.

* Copies are available from the American Society of Mechanical Engineers, 345 East 47th Street, New York, N.Y. 10017.

Copyright National Electrical Manufacturers Association
Provided by IHS under license with NEMA
No reproduction or networking permitted without license from IHS
Not for Resale

Copyright National Electrical Manufacturers Association
Provided by IHS under license with NEMA
No reproduction or networking permitted without license from IHS
Not for Resale

9009279 0004154 52T

SG 4-3.16 DIMENSIONS OF OIL CIRCUIT BREAKER BUSHINGS▲

A. 200 through 350 kV BIL

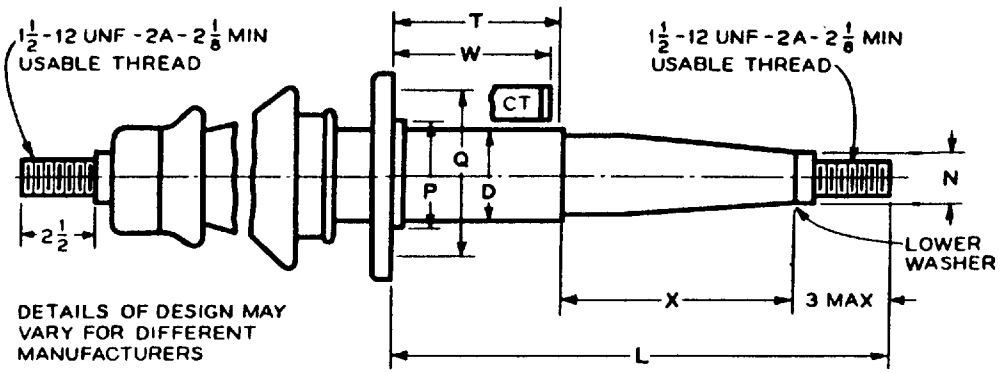

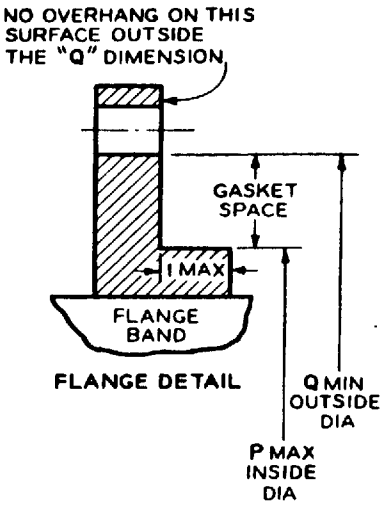

Line No.	Rating: Rated Maximum Voltage, kV rms	Rating: Basic Impulse Level, kV Crest	Rating: Rated Continuous Current, Amperes	Lower End: Length of Bushing From Flange Seat to Lower End ± 1/8 (L)	Lower End: Minimum Insulation Length (X)	Lower End: Depth (W) of Current Transformer Pocket and Distance (T) From Bushing Gasket Surface to Minimum Oil Level (W and T)	Lower End: Diameter From 1 Inch Below Flange to Lower End of Bushing Maximum (D)	Lower End: Diameter of Lower Washer Maximum (N)	Flange: Gasket Space Maximum Inside Diameter (P)	Flange: Gasket Space Minimum Outside Diameter (Q)	Flange: Provision for Bolts Number	Flange: Provision for Bolts Bolt Hole Size	Flange: Provision for Bolts Bolt Circle Diameter
	Col. 1	Col. 2	Col. 3	Col. 4	Col. 5	Col. 6	Col. 7	Col. 8	Col. 9	Col. 10	Col. 11	Col. 12	Col. 13
1	38	200	1200	29 1/2	9 1/2	16 1/2	3 1/8	3 1/8	4	6 1/4	4	7/8	7 1/4
2	48.3	250	1200	31 1/2	11 1/2	16 1/2	3 1/2	3 1/2	4	6 1/4	4	7/8	7 1/4
3	72.5	350	1200	33 1/2	13 1/2	16 1/2	4	4	5	7 1/4	4	7/8	8 1/4

All dimensions in inches.

The oil gauge and power factor tap when supplied shall be in line and midway between two adjacent flange bolt holes.

▲ Title revised editorially.

SG 4-3.17 PREFERRED MOUNTING FLANGE DIMENSIONS OF BUSHINGS FOR USE IN OIL-FILLED APPARATUS

Bolt Circle Diameter, Inches	Number of Holes	Bolt Hole Size, Inches *
6	4	7/8
7 1/4	4	7/8
8 1/4	4	7/8
9 1/4	6	7/8
10 1/4	6	7/8
11 1/4	6	7/8
12 1/4	6	7/8
13 1/4	6	1 1/4
14 1/4	6	1 1/4
15 3/4	8	1 1/4
18 1/2	12	1 1/4
21	12	1 1/4
23	12	1 1/4
25	12	1 1/4
28	12	1 1/4
32	16	1 1/4
36	16	1 1/4

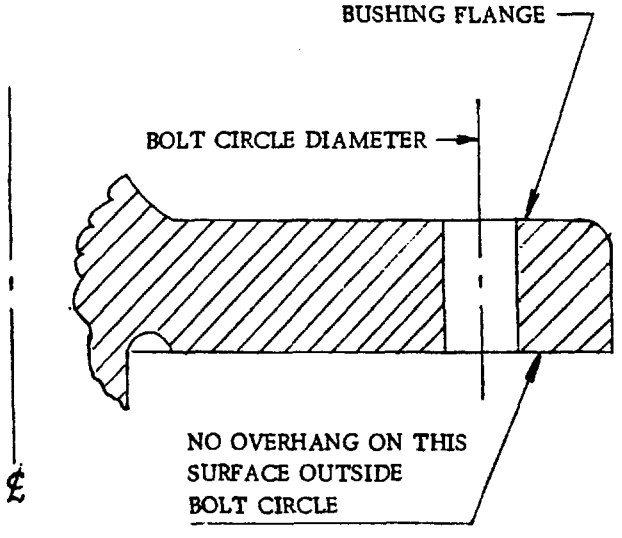

* This dimension represents maximum design capability. Refer to Tables 7.1(a), 7.1(b) and 7.1(c) in American National Standard C76.1 for actual values for specific bushing designs and/or ratings.

NEMA Standard 7-14-1971.

SG 4-3.18 SEISMIC WITHSTAND

These requirements do not apply to circuit breakers used in:

1. Class 1 equipment for nuclear power generating stations.
2. Gas insulated substations.
3. Metal-enclosed equipment.

A. General-purpose Circuit Breakers (0.2g Static)

A general-purpose circuit breaker is designed to withstand a wind load of 90 miles per hour or a horizontal static force equivalent to 0.2g imposed upon its structure in addition to rated line pull and short-circuit forces. Demonstration of the capability of the breaker to meet these design loads can be accomplished by calculations or by statically loading the breaker or its selected components.

B. Definite-purpose Circuit Breakers (0.5g Dynamic)

These circuit breakers may be installed in locations where seismic activity occurs frequently and where a seismic withstand capability above 0.2g static is desired. For these locations, the maximum dynamic response to seismic motion shall be determined.

The design response spectra illustrated in Figure 3-8 (Part 3, Page 26) for a maximum horizontal foundation acceleration of 0.5g shall be used to calculate dynamic response. A vertical motion shall be considered to act simultaneously with, but at three-quarters of the amplitude of, the horizontal motion. The frequency range to be examined shall be from 0.1 to 25 hertz.

The design of the foundation shall take into consideration the maximum forces and overturning moments at the foundation attachment points as well as the maximum deflections of the circuit breaker relative to the foundation.

The dynamic analysis of the circuit breaker shall indicate its ability to perform its required function after a seismic disturbance as shown either by analysis or by test. Definition of procedures for qualification or test or analysis of equipment is beyond the scope of this section which only defines a response spectra.

NEMA Standard 3-12-1975.

Copyright National Electrical Manufacturers Association
Provided by IHS under license with NEMA
No reproduction or networking permitted without license from IHS
Not for Resale

9009279 0004156 3T2

Fig. 3-8
DESIGN RESPONSE SPECTRA FOR 0.5g MAXIMUM FOUNDATION ACCELERATION

Copyright National Electrical Manufacturers Association
Provided by IHS under license with NEMA
No reproduction or networking permitted without license from IHS
Not for Resale

9009279 0004157 239

Part 4
TESTING STANDARDS

SG 4-4.01 APPLICABLE AMERICAN NATIONAL STANDARDS

American National Standards C37.073, C37.076, C37.09, C37.09a, C37.9 and C37.9a have been approved by NEMA and, with the following additions, constitute Part 4 of this publication.

NEMA Standard 11-16-1967, revised 3-12-1975.

SG 4-4.02 RADIO INFLUENCE VOLTAGE TESTS (DESIGN TEST)

A. The equipment and general method used in making radio influence voltage tests shall be in accordance with the recommendations given in the NEMA "Standards Publication for Methods of Measurement of Radio Influence Voltage (RIV) of High-voltage Apparatus," 107-1964 (R 1971).

B. Tests at one selected radio frequency shall be made with the circuit breaker both in the closed and open position.

C. In the case of multipole circuit breakers, one pole or terminal or groups of the same may be used at a time.

D. The tanks of oil-insulated circuit breakers shall be filled with the prescribed amount of oil.

E. The case, tank, frame and other normally grounded parts shall be connected to ground.

F. When a test is made with the circuit breaker in the open position, the pole or group of poles not under the test shall be grounded and ungrounded, and the radio influence voltage determined for each condition.

G. No other grounded or ungrounded object or structure (except mounting structure when required) shall be nearer any part of the circuit breaker or its terminals under test than three times the longest overall dimension of the test piece, with a minimum allowable spacing of 3 feet.

H. Where space requirements under test conditions do not permit the foregoing clearances to be maintained, the test will be considered satisfactory if the limits of radio influence voltage obtained are equal to or less than those specified in Table 4-1 (Part 4, Page 2). In such cases a record should be made of the object, structures, etc., and their distances from the device under test.

I. Tests may be made under the conditions prevailing at the time and place of test. However, it is recommended that tests be avoided when the radio influence voltage of test equipment (including the influence voltage of irrelevant electrical devices) with the circuit breaker under test disconnected from the test equipment exceeds 25 percent of the radio influence voltage of the circuit breaker to be tested.

J. The frequency of the supply voltage shall be 60 hertz, plus or minus 5 percent. A sine wave as defined in American National Standard C50 shall be applied to the devices.

K. Tests shall be conducted under the atmospheric conditions prevailing at the time and place of test, but it is recommended that tests be avoided when the vapor pressure is below 0.2 or exceeds 0.6 inch of mercury. Since the effects of humidity and air density upon radio influence voltage are not definitely known, no correction factors are recommended for either at the present time. However, it is recommended that barometric pressure and dry- and wet-bulb thermometer readings be recorded so that, if suitable correction factors should be determined, they can be applied to previous measurements.

L. Conductors of the largest size intended for use with the test piece may be connected to each terminal. The length of the conductors, when used, shall be equal to or greater than the longest overall dimension of the test piece, except that the length need not exceed 6 feet. The free end of any such conductor shall terminate in a sphere having a diameter of twice the diameter of the conductor plus or minus 10 percent or shall be shielded in some other suitable manner to eliminate the effect of the end of the conductor as a source of radio influence voltage.

Copyright National Electrical Manufacturers Association
Provided by IHS under license with NEMA
No reproduction or networking permitted without license from IHS
Not for Resale

M. The test shall be made without removing any component part, and the test voltage shall be determined by the lowest rated voltage of any component part. The limiting radio influence voltage shall be identical with the highest value fixed for any of the component parts which determine the test voltage.

N. The following precautions shall be observed when making radio influence tests:

1. The circuit breaker shall be at approximately the same temperature as the room in which the test is made.
2. The circuit breaker shall be dry and clean.
3. The circuit breaker shall not be subjected to dielectric tests within 2 hours prior to the radio influence voltage test.

NEMA Standard 9-17-1953, revised 5-17-1955; 11-16-1967; 3-12-1975.

4. If the radio influence voltage falls off rapidly after the 60-hertz voltage has been applied for a short time, the circuit breaker may be pre-excited at normal operating voltage for a period not exceeding 5 minutes before proceeding with the tests.

Authorized Engineering Information 3-12-1975.

Table 4-1
Limits of Radio Influence Voltage

Circuit Breaker Rated Maximum Voltage, kV	Test Voltage, kV	Limit of Radio Influence Voltage, Microvolts at 1000 KHz
2.4	1.67	500
4.76	2.89	500
8.25	5.01	500
15.0	9.10	500
15.5	9.41	500
25.8	15.7	650
38.0	23.0	650
48.3	29.3	1250
72.5	44.0	1250
121	73.4	2500
145	88.0	2500
169	102.5	2500
242	147.0	2500
362	219	2500
550	335	2500
800	485	2500

NOTE I—Measurements shall be made with the circuit breaker in the noncurrent-carrying or nonoperating condition.

NOTE II—In the case of circuit breakers having voltage ratings not covered by this table, the test voltage shall be 5 percent above the line-to-neutral voltage corresponding to the maximum voltage of Range B as given in Table I of American National Standard C84.1.

NOTE III—Circuit breakers having two voltage ratings shall be tested at the higher voltage rating.

Copyright National Electrical Manufacturers Association
Provided by IHS under license with NEMA
No reproduction or networking permitted without license from IHS
Not for Resale

9009279 0004159 001

SG 4-4.03 BUSHING POTENTIAL DEVICE TEST (PRODUCTION TEST)

Bushing potential devices shall be given both a dielectric and electrical test.

The dielectric tests shall consist of the following low-frequency 1-minute tests.

The primary windings of the potential device network transformer, lead-in cable, the shunt or auxiliary capacitor (when used), and other equipment in the tap circuit, exclusive of the protective gap, shall be given a low-frequency test having a value of four times the maximum operating tap voltage at rated voltage, burden and frequency.

The protective gap shall withstand a 60-hertz flashover test within the limits of its setting as specified in par. B.2 of SG 4-3.11.

The power-factor-correction capacitor, phase angle capacitor (if used), and other equipment in the secondary circuit of the potential device network shall be given a low-frequency test having a value of four times the maximum operating voltage impressed between terminals on the respective component parts when the potential device is operated at rated voltage, burden and frequency. The secondary circuits and associated windings shall also be given a low-frequency test of 2500 volts between the terminals on the adjusting panel and ground.

The electrical tests shall consist of the necessary electrical measurements on the potential device network or its component parts to insure proper operation of the potential device. Measurements of the electrical constants of the component parts of the potential network, such as resistances, inductive and capacitive reactances, turn ratios and tap locations shall be made at the adjusting panel, insofar as practical, to insure that the parts are correctly connected in accordance with the connection diagram.

NEMA Standard 3-22-1945, revised 9-17-1953.

SG 4-4.04 NONPRESSURIZED PORCELAIN COMPONENTS (DESIGN TEST)

A representative item of each design of nonpressurized porcelain elements utilizing end flanges, which are subjected to cantilever or tensile stress in a circuit breaker application, shall withstand for 5 minutes a test stress equivalent to 2.0 times the most probable stress imposed upon it by the sum of rated line pull plus short-circuit forces within the circuit breaker length. The porcelain elements shall also withstand for 5 minutes a total test stress equivalent to 1.5 times the design stress calculated from par. A or B, unless this total test stress is less than that calculated in the preceding sentence.

A. General-purpose Circuit Breakers (0.2g Static)

These circuit breakers shall be designed to withstand a 90-mile-per-hour wind or a 0.2g static seismic load. The design stress calculation shall be based on the greater of (1) the sum of rated line pull plus short-circuit forces within the circuit breaker plus a 90-mile-per-hour wind, or (2) the sum of a rated line pull plus short-circuit forces within the circuit breaker plus 0.2g static seismic loading.

B. Definite-purpose Circuit Breakers (0.5g Dynamic)

The design stress calculation shall be based on the sum of maximum seismic dynamic response plus rated line pull plus short-circuit forces within the circuit breaker. If the design stress calculated by this par. B is less than that calculated by par. A, the greater value from par. A shall be used.

NEMA Standard 3-12-1975.

SG 4-4.05 PRESSURIZED COMPONENTS

A. Pressurized Porcelain Components (Design Test)

A representative item of each design of potential insulators, porcelain housings, or porcelain tubes having an internal, or external, gas pressure exceeding 15 psig (with no limitation on size) shall withstand for 5 minutes 4.25 times the maximum allowable working pressure after all glazing, firing, and grinding operations are completed. When the porcelain element utilizes end flanges, the test pressure shall be applied on a complete assembly, using bolted end plates and loading the flanges in tension. If the porcelain element does not have end flanges and is used in an assembly which is held together by longitudinal compression (center clamping), the end plates shall be restrained by the test fixture and the porcelain element loaded only in hoop stress.

Copyright National Electrical Manufacturers Association
Provided by IHS under license with NEMA
No reproduction or networking permitted without license from IHS
Not for Resale

A representative item of each design of pressurized porcelain elements which are subjected to cantilever stress in a circuit breaker application, after all glazing, firing, grinding, and cementing operations are completed, shall withstand for 5 minutes a total test stress equivalent to the end load from maximum allowable working pressure plus a test cantilever stress equal to a multiple of the design cantilever stress, as follows:

1. General-purpose Circuit Breakers (0.2g Static). A multiple of three times the design cantilever stress shall be used. The design cantilever stress shall be based on the greater of:

   a. The sum of rated line pull plus short-circuit forces within the circuit breaker plus a 90 mile-per-hour wind, or,

   b. The sum of rated line pull plus short-circuit forces within the circuit breaker plus 0.2g static seismic loading.

2. Definite-purpose Circuit Breakers (0.5g Dynamic). A multiple of 1.5 times the design cantilever stress shall be used. The design cantilever stress shall be based on the sum of rated line pull plus short-circuit forces within the circuit breaker plus maximum seismic dynamic response. If the test cantilever stress calculated by this par. 2 is less than either of those calculated by par. 1, the greater value from par. 1 shall be used.

B. Pressurized Fiberglass-reinforced-plastic Components (Design Tests)

Components which neither electrically isolate nor separate high-voltage elements of 1000 volts or higher shall be tested in accordance with the requirements of the ASME "Boiler and Pressure Vessel Code—Section X—Fiberglass-Reinforced Plastic Pressure Vessels" * and of any state or local codes which apply at the point of original installation.

* Copies are available from the American Society of Mechanical Engineers, 345 East 47th Street, New York, N.Y. 10017.

Components which electrically isolate or separate high-voltage elements of 1000 volts or higher shall be given design cyclic pressure and burst tests in accordance with par. 1, 2 or 3. These tests shall be made on a prototype of each design of fiberglass-reinforced-plastic vessel, insulator or tube having an internal or external gas pressure exceeding 15 psig and having an inside diameter exceeding 6 inches, after all coating, curing, and fabrication operations are completed. When the plastic element utilizes end flanges or fastenings loaded in tension or cantilever, cyclic and burst tests at 4.25 times the maximum allowable working pressure shall be applied on a complete assembly, using bolted end plates and loading the flanges or fastenings in tension or cantilever. If the plastic element does not have end flanges or fastenings loaded in tension or cantilever and is used in an assembly which is held together by longitudinal compression (center clamping), the end plates shall be restrained by the test fixture and the plastic element loaded only in hoop stress.

The maximum rated cantilever stress shall be based on the load on the plastic element resulting from (1) the combination of the short-circuit forces internally within the circuit breaker, plus the rated line pull, plus a 90-mile-per-hour wind or (2) the combination of the short-circuit forces internally within the circuit breaker, plus the rated line pull, plus 0.2g (static) earthquake shock, whichever is the more severe duty.

Cyclic and burst tests shall be carried out on a representative sample of each design element as follows:

1. Vessels Intended for Internal Pressure Only—At least one prototype vessel shall be subjected to a cyclic pressure test followed by a hydrostatic pressure burst test at the maximum working temperature but not less than 150°F. The pressure shall be cycled from atmospheric pressure to the maximum allowable working pressure and back 50 000 times; except that vessels with internal liners or external jackets, whether integral or not, shall be cycled for 5000 cycles at the minimum working temperature and for 45 000 cycles at the maximum working temperature.

Copyright National Electrical Manufacturers Association
Provided by IHS under license with NEMA
No reproduction or networking permitted without license from IHS
Not for Resale

9009279 0004161 76T

The vessel shall then be burst, using an appropriate liquid, at the maximum working temperature but not less than 150°F, with the pressure applied at a uniform rate so that failure occurs in not less than 1 minute.

The minimum burst pressure shall be 4.25 times the pressure required to stress the plastic vessel to its maximum allowable working pressure plus the magnitude of any end loading and/or cantilever stress expected to occur under service conditions. The end loading and/or cantilever stress may be applied by means other than pressure. However, if the first vessel tested fails at not less than 90 percent of this value, the manufacturer may burst more vessels which have been subjected to cyclic pressure tests. The average burst pressure of these additional vessels, including that of the first vessel, shall be 4.25 times the design test pressure and no others shall burst below the value of the first vessel.

2. Vessels Intended for Both Internal and External Pressure—At least one prototype vessel intended for both internal and external pressure service shall be subjected to a cyclic pressure test in accordance with the requirements of par. 1, except that the pressure shall be cycled from the external maximum allowable working pressure to the internal maximum allowable working pressure and back 50 000 times. At the manufacturer's option, the cyclic pressure test may be carried out in two steps, as follows:

   (a) The pressure shall be cycled from the external maximum allowable working pressure to atmospheric pressure and black 50 000 times.

   (a) The pressure shall be cycled from the external maximum allowable working pressure to atmospheric pressure and back 50 000 times.

   The prototype vessel, after being subjected to the external hydrostatic pressure test, shall then be subjected to an internal hydrostatic burst test in accordance with the requirements of par. 1.

3. Vessels Intended for External Pressure Service Only—At least one prototype vessel shall be subjected to a cyclic external pressure test followed by a buckling test at the maximum working temperature but not less than 150°F with the external pressure applied at a uniform rate and having an internal pressure of 15 psia. The external pressure shall be cycled from atmospheric pressure to the maximum allowable working differential pressure and back 50 000 times. The minimum buckling pressure shall be 4.25 times the pressure required to stress the plastic vessel to its maximum allowable working differential pressure plus the magnitude of any ends loading and/or cantilever stress expected to occur under service conditions. The end loading and/or cantilever stress may be applied by means other than pressure. However, if the first vessel tested fails at not less than 90 percent of this value, the manufacturer may test additional vessels. The average rupture pressure of these additional vessels, including that of the first vessel, shall be 4.25 times the design test pressure and no others shall rupture below the value of the first vessel.

C. Pressurized Fiberglass-reinforced-plastic Components (Production Tests)

Components, which neither electrically isolate nor separate high-voltage elements of 1000 volts or higher shall be tested in accordance with the requirements of the ASME "Boiler and Pressure Vessel Code—Section X—Fiberglass-Reinforced Plastic Pressure Vessels" * and of any state or local codes which apply at the point of original installation.

The manufacturer shall establish design and process procedures prior to production work on fiberglass-reinforced-plastic pressure vessels which electrically isolate or separate high-voltage elements of 1000 volts or higher to insure units of uniform characteristics.

* Copies are available from the American Society of Mechanical Engineers, 345 East 47th Street, New York, N.Y. 10017.

Copyright National Electrical Manufacturers Association
Provided by IHS under license with NEMA
No reproduction or networking permitted without license from IHS
Not for Resale

All production vessels having an internal or external gas pressure exceeding 15 psig and having an inside diameter exceeding 6 inches shall individually withstand for 1 minute, without leaking, a hydrostatic pressure test at 1.5 times the maximum working pressure, or a pneumatic pressure test at 1.25 times the maximum working pressure, after all coating, curing and fabrication operations are completed. No permanent distortion shall result from this pressure test. If the pneumatic test is made, it is recommended that the test pressure be lowered after 1 minute to a value equal to the maximum working pressure before examination for leakage is begun. When the plastic element utilizes end flanges or fastenings loading the element in tension or cantilever, the test pressure shall be applied on a complete assembly, using bolted end plates and loading the flanges or fastenings in tension. If the plastic element is used in an assembly which is held together by longitudinal compression (center clamping), the end plates shall be restrained by the test fixture and the plastic element loaded only in hoop stress.

At least one vessel of each design of 2000 duplicate production vessels shall be subjected to design cyclic and burst tests, but a minimum of one such vessel produced in three years shall be so tested.

The determination of the weight of resin and fiberglass shall be made on at least one of each 1000 duplicate production vessels, with a minimum of one test each year. The weight shall be not less than 90 percent of that tested in the cyclic and burst tests.

The under-thickness deviation in any area of a production vessel shall not exceed 10 percent of the vessel, or 10 percent of the average of the vessels, given cyclic and burst tests.

The weight of each production vessel shall be determined and shall be not less than 90 percent of that tested in the cyclic and burst tests.

D. Assembled Pressurized Fiberglass-reinforced-plastic Components (Production Tests)

If the circuit breaker is not completely assembled at the factory prior to shipment, each major assembly shall be tested in the factory by raising the pressure to the maximum allowable working pressure and holding it for 5 minutes.

These assembled component tests are not required if the circuit breaker is completely assembled at the factory and the pressure test described in par. 5.5 of American National Standard C37.09 is made.

NEMA Standard 9-20-1968, revised 5-17-1972; 3-12-1975.

SG 4-4.06 NOISE REQUIREMENTS

The purpose of this standard is to establish guidelines to provide protection against excessive environmental disturbance from outdoor switchyard circuit breakers. This standard does not apply to circuit breakers used in gas-insulated substations and metal-enclosed equipment.

A. Equipment Classification

1. General-purpose Equipment—This type of equipment shall be designed to comply with the noise regulations of OSHA which set forth measurements and practices with regard to noise levels which are deemed acceptable in occupational environments without personal protective equipment to reduce the noise level.

2. Definite-purpose Equipment—This type of equipment shall be designed to meet lower noise levels than those of general-purpose equipment because of additional environmental factors concerned with noise disturbances.

B. Terminology and Definitions

All terms and definitions not modified by this standard shall be in accordance with the American National Standards S1.1 and S1.13.

C. Noise Exposure Conditions

1. Personnel at, or very close to, the circuit breaker during installation, maintenance or inspection periods.

2. Personnel at control stations.

3. Persons in the proximity of the equipment as permitted by limiting boundaries.

Copyright National Electrical Manufacturers Association
Provided by IHS under license with NEMA
No reproduction or networking permitted without license from IHS
Not for Resale

9009279 0004163 532

D. Noise Classification

1. Impulse Noise—The noise produced by a closing, opening or close-open operation of the circuit breaker is classified as impulse noise.

2. Continuous Noise—The noise produced by vibrations, fans, blowers, etc., is classified as continuous noise.

3. Intermittent Noise—The noise produced by periodic operation (occurring one or more times per day or per week) of such devices as compressors or hydraulic pumps, compressor unloader exhausts, air regulator valves, air drains, etc., is classified as intermittent noise.

E. Noise Level

The noise level shall not exceed those given in Table 4-2 (Part 4, Page 8) for the different equipment and noise classifications. Where intermittent noise recurs several times daily, with each noise level enduring for 1 second or as long as several hours per day, the accumulated intermittent noise shall be calculated as follows, using the permissible sound levels and times given in Table 4-3.

Table 4-3
Permissible Noise Exposure

Duration per Day, Hours	Sound Level, dB
8	90
6	92
4	95
3	97
2	100
1 1/2	102
1	105
1/2	110
1/4 or less	115

When the daily noise exposure is composed of two or more periods of exposure to different sound levels, their combined effect should be considered, rather than the individual effect of each. If the sum of the following fractions: C1/T1+C2/T2...Cn/Tn exceeds unity, then, the mixed exposure should be considered to exceed the limit value. Cn indicates the total time of exposure at a specified sound level, and Tn indicates the total time of exposure permitted at that level. If the period between repeating (intermittent) noise is less than 1 second, the noise is considered to be continuous.

F. Noise Measurement Equipment

Noise measurements shall be made with a sound-level meter meeting the requirements of American National Standard S1.4. The reference pressure for all measurements shall be 2×10^{-4} microbar. American National Standard S1.13 shall apply unless otherwise modified by this standard. Impulse noise limits shall be specified as peak values without weighting. The peak sound pressure level shall be measured with a sound-level meter in combination with either an impact noise analyzer or an octave-band noise analyzer using the all pass range.

Continuous and intermittent noise measurements shall be made with a sound level meter giving an rms response, using the A scale and a "slow" meter speed.

Care shall be taken so that measurements will not be influenced by noise reflection, focus, or amplification from walls, buildings or other surfaces.

G. Design Tests

Design tests to determine the levels of impulse, continuous and intermittent noise shall be made under no-load conditions on a completely assembled circuit breaker.

If a complete three-phase circuit breaker is not assembled at the place of manufacture, the tests shall be made at the installation site.

NEMA Standard 3-21-1973, revised 3-12-1975.

Factors over which the manufacturer does not have control should be considered when making noise measurements at installations. The tests should be carried out at maximum rated operating conditions and corresponding operating speeds. If the circuit breaker is operated for test purposes without its normal interrupting fluid, the design tests should be performed under this condition.

Authorized Engineering Information 3-21-1973.

Copyright National Electrical Manufacturers Association
Provided by IHS under license with NEMA
No reproduction or networking permitted without license from IHS
Not for Resale

Copyright National Electrical Manufacturers Association
Provided by IHS under license with NEMA
No reproduction or networking permitted without license from IHS
Not for Resale

9006279 0004464 479

Table 4-2
Sound Level Limits

Equipment Classification, kV Range	Impulse Noise Limit		Intermittent Noise Limit		Continuous Noise Limit	
	Maximum Sound Pressure Level, dB*	Horizontal Distance to Measurement Point, Feet	Maximum Sound Pressure Level, dB*	Horizontal Distance to Measurement Point, Feet	Maximum Sound Pressure Level, dB*	Horizontal Distance to Measurement Point, Feet
1. General-purpose Outdoor Equipment						
362 and Below	140	3†	* *	50†	90	50†
		2‡				
Above 362	140	3†	* *	100†	90	100†
		2‡				
2. Definite-purpose Outdoor Equipment	(The following limits are in addition to those required for general-purpose equipment.)					
362 and Below	105	150†	90	150†	85	150†
	95	500†	80	500†	75	500†
Above 362	105	300†	90	300†	85	300†
	95	1000†	80	1000†	75	1000†

* The sound level limits are based on no-load operation since personnel are not expected to stand adjacent to the circuit breaker when it is opening under fault conditions. Measurements shall be made 5 feet above ground level.

† Measured from perimeter of circuit breaker with cabinet doors closed.

‡ Measured at location of the control switch of the circuit breaker with the cabinet doors open.

* * See par. E for maximum allowable sound level.

NOTE—It is considered that the routine operation of the switching station will not submit a person to a continuous or intermittent exposure unless he is at least at or within the specified minimum distance from the noise, depending on the circuit breaker voltage rating.

9009279 0004165 305

Part 5
APPLICATION STANDARDS

SG 4-5.01 APPLICABLE AMERICAN NATIONAL STANDARDS

American National Standards C37.010, C37.0721, C37.0731 and C37.078 have been approved by NEMA and, with the following additions, constitute Part 5 of this publication.

NEMA Standard 11-16-1967, revised 3-12-1975.

SG 4-5.02 CIRCUIT BREAKERS FOR ALTERNATING-CURRENT MOTOR STARTING

The following information is provided for the application of circuit breakers to the control of motors.

Circuit breakers for alternating-current motor starting and running service should be applied so that their ratings as listed in American National Standards C37.06 and C37.6 will be adequate to meet the requirements as determined by location of the circuit breakers in the alternating-current system and circuit. Figure 5-1 (Part 5, Page 2) illustrates typical methods of alternating-current motor starting.

In addition, the following specific provisions should be considered in connection with this application of circuit breakers in order to provide satsifactory service.

A. Voltage

The voltage rating of all circuit breakers, including the circuit breakers in the reduced voltage starting and neutral circuits as well as the line and running circuit breakers, should correspond to the voltage rating of the motor.

B. Continuous Current

The continuous-current rating of each circuit breaker should be not less than the full-load current of the motor except that, in the case of part winding started motors, it should be not less than the full-load current of that winding in which the circuit breaker is located.

Circuit breakers used during the starting period only, with autotransformer or reactor starting, may have a continuous current rating not less than two-thirds of the current requirement of the main circuit breaker.

If the motor has a service factor so that it can carry some percentage of the rated load current, such as 15 percent above normal, continuously or has a short-time overload rating, such as 25 percent for 2 hours, then the continuous current rating of the circuit breaker should be not less than the value determined by the service factor or by the overload rating.

C. Short-time Current and Short-circuit Current

All circuit breakers, except neutral starting circuit breakers (designated as "N" in Figure 5-1) should meet the system short-time and short-circuit current requirements.

The neutral starting circuit breakers (designated as "N" in Figure 5-1) used for neutral reactor, neutral part winding, wye-delta and autotransformer started motors, since they have the reactance of the motor or autotransformer windings interposed between them and the alternating-current system, should meet the reduced short-time and short-circuit current requirements as determined by the sum of the interposing and system reactances.

D. Starting Current

The maximum amount of starting current in rms symmetrical amperes that each electrically operated circuit breaker should be required to make at any time during the motor starting cycle should not exceed 30 percent of the short-circuit current rating of the circuit breaker at circuit voltage. The circuit breaker should not be required to carry this value of starting current for longer than 1 minute.

The above percentages should apply to circuit breakers with electrical operation or "quick make and break" manual operating mechanisms but, for circuit breakers with other types of manual operating mechanisms, the percentages should be reduced to 7 1/2 percent.

The starting current values for the various methods of motor starting as shown in Figure 5-1 should be determined as follows:

1. With full voltage starting (Figure 5-1. a) the starting current is equal to the locked rotor current at full voltage.

Copyright National Electrical Manufacturers Association
Provided by IHS under license with NEMA
No reproduction or networking permitted without license from IHS
Not for Resale

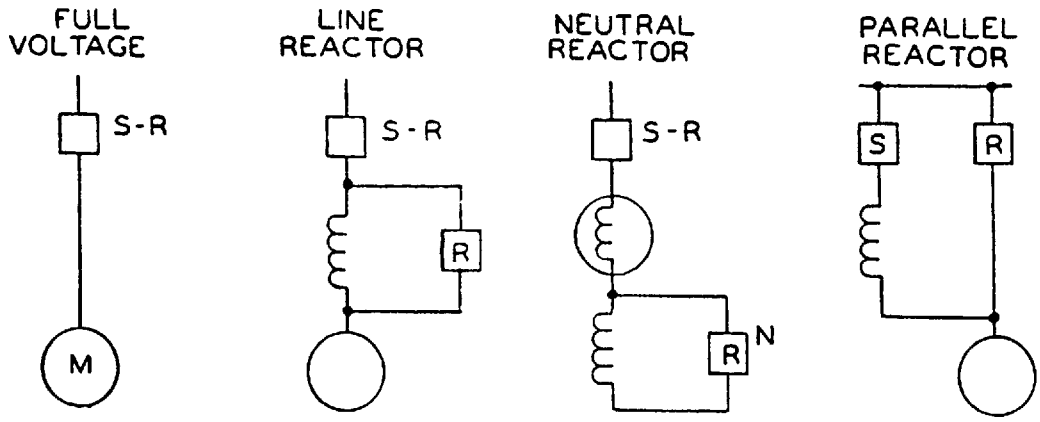

Fig. 5-1.a Fig. 5-1.b Fig. 5-1.c Fig. 5-1.d

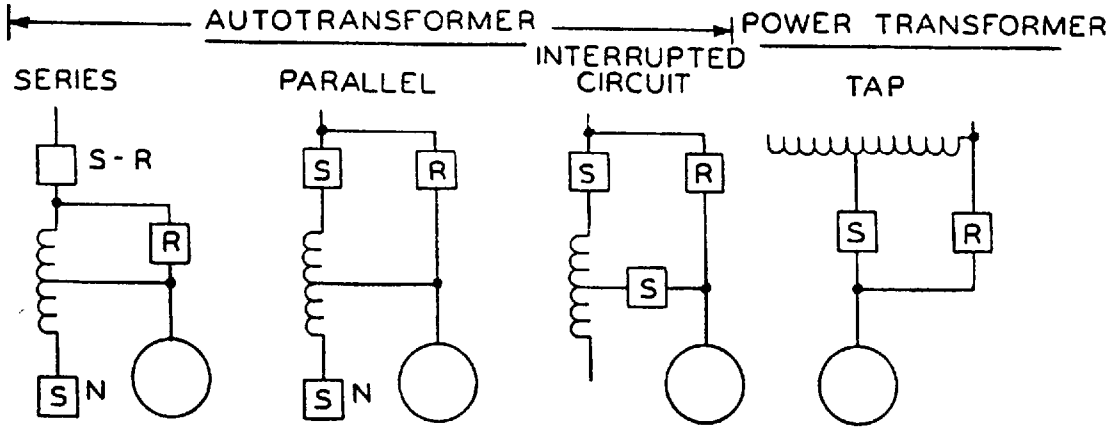

Fig. 5-1.e Fig. 5-1.f Fig. 5-1.g Fig. 5-1.h

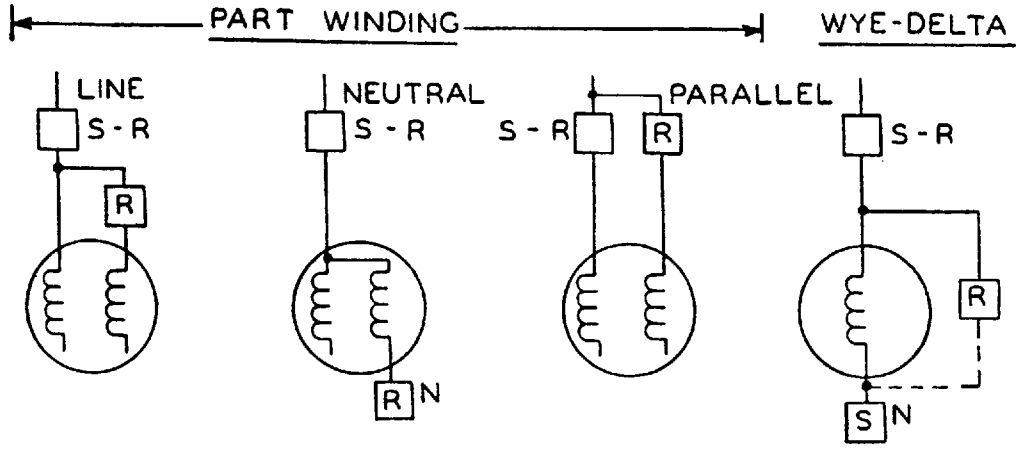

Fig. 5-1.i Fig. 5-1.j Fig. 5-1.k Fig. 5-1.m

S - STARTING R - RUNNING N - NEUTRAL

Fig. 5-1
METHODS OF ALTERNATING-CURRENT MOTOR STARTING

Copyright National Electrical Manufacturers Association
Provided by IHS under license with NEMA
No reproduction or networking permitted without license from IHS
Not for Resale

9009279 0004167 188

2. With wye-delta starting (Figure 5-1. m) the starting current is equal to 0.33 of the locked rotor current on the running (delta) connection.

3. With reactor starting (Figures 5-1. b, 5-1. c and 5-1. d) the starting current is determined from the sum of the reactances of the starting reactor and of the motor under locked rotor conditions.

4. With part winding starting (Figures 5-1. i, 5-1. j and 5-1. k) the starting current is determined from the reactance of the motor starting winding under locked rotor conditions.

5. With autotransformer reduced voltage starting (Figures 5-1. e, 5-1. f and 5-1. g) where:

   I = Locked rotor amperes at full voltage.

   p = Transformer tap used (fraction of full voltage).

   Im = Rated full load current of motor.

   a. The starting current drawn from the line = $I \times p^2 + 0.25$ Im.

   b. The starting current taken by the motor = $I \times p$.

   c. The autotransformer neutral current = $I \times p - I \times p^2 + 0.25$ Im.

6. With power transformer tap starting (Figure 5.1. h), the starting current equals I x p as covered in par. D. 5. b for autotransformer reduced voltage starting.

NEMA Standard 5-19-1939, revised 1-7-1941; 3-7-1946; Authorized Engineering Information 3-13-1952; 3-12-1953; 10-7-1959; 11-16-1967.

SG 4-5.03 THREE-COIL TRIP OR EQUIVALENT FAULT PROTECTION

For overcurrent fault protection of three-phase circuits, circuit breakers shall be provided with a minimum of three overcurrent relays or trip coils, one in each phase (except that no overcurrent trip is required in a grounded phase conductor). Where overcurrent relays operated from three current transformers are used, an overcurrent relay in the residual circuit of the current transformers may replace one of the phase relays.

Recommended Standard 6-11-1946, NEMA Standard 9-17-1953.

SG 4-5.04 CIRCUIT BREAKERS NORMALLY DESIGNED FOR THREE-PHASE SYSTEMS WHEN APPLIED TO SINGLE-PHASE SYSTEMS BELOW 72.5 kV HAVING ONE CONDUCTOR GROUNDED

A. Voltage Rating

Circuit breakers for use on single-phase systems below 72.5 kV having one conductor grounded shall be applied on the basis of the next higher voltage rating corresponding to 1.73 times the voltage of the circuit to ground. They shall be given the dielectric tests specified for the derived voltage rating.

EXAMPLE—A circuit breaker on an 11 000-volt circuit having one conductor grounded would be designed for dielectric test based on not less than 19 000 volts and, consequently, a 25.8 kV circuit breaker would be required.

B. Short-circuit Current Rating

Where two-pole circuit breakers are applied to single-phase systems below 72.5 kV in each side of the circuit, they shall be rated in rms amperes corresponding to the short-circuit current rating at the normal rated voltage of the circuit. In making such applications, refer to the limitations listed in 4.5.2.3 of American National Standard C37.04.

EXAMPLE—The circuit breaker, installed as shown in Figure 5-2, will be given a short-circuit current rating corresponding to 11 000-volt operation.

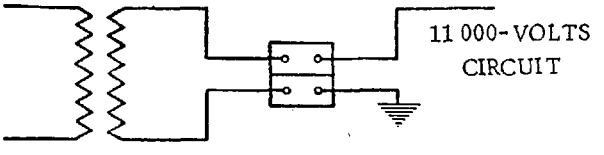

Fig. 5-2

Copyright National Electrical Manufacturers Association
Provided by IHS under license with NEMA
No reproduction or networking permitted without license from IHS
Not for Resale

9009279 0004168 014

When single-pole circuit breakers are applied to single-phase systems below 72.5 kV having one conductor grounded, they shall be rated in rms amperes at 1.15 or K (whichever is smaller) times the current value corresponding to the interrupting capacity at a voltage 1.73 times the normal rated voltage of the circuit.

EXAMPLE—The circuit breaker, installed as shown in Figure 5-3, will be given an interrupting rating of 1.15 or K times its three-phase rating at 19 000 volts, whichever is smaller.

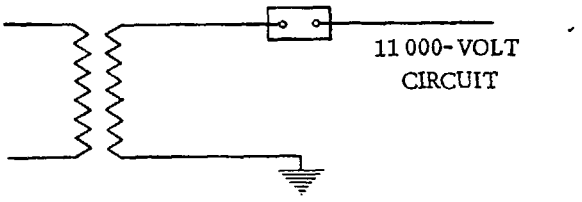

Fig. 5-3

NEMA Standard 8-5-1930, revised 1-7-1941; 3-7-1947; 3-12-1975.

SG 4-5.05 NEUTRAL GROUNDING CIRCUIT BREAKERS

A. Rated Voltage

The rated maximum voltage should at least correspond to the system nominal line-to-line voltage since the line-to-line voltage may appear across open neutral grounding circuit breakers during certain short-circuit conditions.

B. Rated Current

The size of neutral grounding circuit breakers should be such that their short-time current capability will not be exceeded.

C. Rated Short-circuit Current

A circuit breaker used for neutral grounding service only may be applied up to 115 percent of its rated short-circuit current (at rated maximum voltage) or K times its rated short-circuit current, whichever is smaller (see American National Standard C37.06 and Tests 13 and 14 of Table 1 of C37.09). This is possible since the circuit breaker is selected on a line-to-line voltage basis but only line-to-neutral voltage appears across any such circuit breaker when opening neutral grounding current.

Authorized Engineering Information 9-18-1957, revised 3-12-1975.

SG 4-5.06 MULTIPLE SINGLE-POLE CIRCUIT BREAKERS

A. Slow-speed circuit breakers (above 8 cycles) without a mechanical interlock or connection to insure simultaneous tripping of all poles, and regardless of the relay protection scheme, may be applied where the maximum of the system voltage range variation is no more than 87 percent of the circuit breaker rated maximum voltage. In addition, the short-circuit current shall be not greater than 87 percent of the rated short-circuit current.

B. High-speed circuit breakers (8 cycles or less) without a mechanical interlock or connection between poles and without an adequate tripping scheme to insure simultaneous tripping of all poles may be applied where the maximum of the system voltage range variation is no more than 87 percent of the circuit breaker rated maximum voltage.

C. High-speed circuit breakers (8 cycles or less) having an adequate tripping scheme to trip all poles simultaneously and with or without a mechanical interlock or connection between poles may be applied at their rated values.

NEMA Standard 9-17-1931, revised 1-7-1941; 3-7-1946, Authorized Engineering Information 3-12-1975.

SG 4-5.07 REPETITIVE DUTY—INDOOR AIR CIRCUIT BREAKERS FOR ARC FURNACE SWITCHING

Power operated air circuit breakers particularly designed for arc furnace switching, when operating under usual service conditions, shall be capable of operating the required number of times given in Table 5-1. The operating conditions and the permissible effect upon the circuit breakers are given in the following paragraphs. For each column, all paragraphs listed shall be considered.

A. Servicing

Servicing shall consist of adjusting, cleaning, lubricating, tightening, etc., as recommended by the manufacturer. The operations listed are on the basis of servicing at intervals of 6 months or less.

B. Circuit Conditions

When closing and opening no load.

Copyright National Electrical Manufacturers Association
Provided by IHS under license with NEMA
No reproduction or networking permitted without license from IHS
Not for Resale

Table 5-1

Circuit Breaker Rating		Arc Furnace Rating Full Load, Amperes	Maximum Number of Operations Between Servicing, Par. A	Number of Operations	
Rated Maximum Voltage, kV	Rated Continuous Current, Amperes			No Load Mechanical Par. B, C, D.1 and D.2	Switching and Interrupting Par. C, D.1, D.3 and E
4.76 8.25 15.0	600/1200	Below 100	2000	20 000	See Schedule 1
4.76 8.25 15.0	600/1200	100 to 1200	2000	20 000	See Schedule 2
4.76 8.25 15.0	2000	1201 to 2000	2000	10 000	See Schedule 3
4.76 8.25 15.0	3000	2001 to 3000	2000	5 000	See Schedule 4
15.5 25.8 38	1200/2000	Not over 200 amperes	250	20 000	See Schedule 5

C. Operating Conditions

With rated control voltage and/or air pressure applied, maintained at 90 to 100 percent of rated value.

Frequency of operation not to exceed twenty in 10 minutes or thirty in 1 hour. Rectifiers, air systems or other auxiliary devices may further limit the frequency of operations.

Servicing at no greater intervals than shown in the fourth column of Table 5-1.

D. Conditions of the Circuit Breaker After the Operations Shown in Table 5-1

1. No parts shall have been replaced.

2. The circuit breaker shall meet all of its current, voltage and short-circuit current ratings.

3. The circuit breaker shall meet all of its current and voltage ratings but not necessarily its short-circuit current rating.

Copyright National Electrical Manufacturers Association
Provided by IHS under license with NEMA
No reproduction or networking permitted without license from IHS
Not for Resale

E. Operation Under Fault Conditions

If a fault operation occurs before the completion of the permissible operations, it is not to be inferred that the circuit breaker can meet its short-circuit current rating or complete its number of operations without servicing and making replacements, if necessary.

1. Schedule 1—10 000 operations interrupting no load or load currents less than 100 amperes, plus 5000 operations interrupting fault currents up to 350 amperes, plus one opening operation (O) at rated short-circuit current.

2. Schedule 2—2500 operations interrupting no load or load currents less than 1200 amperes, plus 200 operations interrupting fault currents up to 3600 amperes, plus one opening operation (O) at rated short-circuit current.

3. Schedule 3—2000 operations interrupting no load or load currents less than 2000 amperes, plus 200 operations interrupting fault currents up to 6000 amperes, plus one opening operation (O) at rated short-circuit current.

4. Schedule 4—1000 operations interrupting no load or load currents less than 3000 amperes, plus 50 operations interrupting fault currents up to 9000 amperes, plus one opening operation (O) at rated short-circuit current.

5. Schedule 5—12 000 operations interrupting no load or load currents less than breaker continuous current rating, plus 3000 operations interrupting fault currents up to 4000 amperes, plus one opening operation (O) at rated short-circuit current.

NEMA Standard 5-25-1954, revised 11-16-1967; 3-12-1975.

Copyright National Electrical Manufacturers Association
Provided by IHS under license with NEMA
No reproduction or networking permitted without license from IHS
Not for Resale

9009279 0004171 609

Part 6
INSTALLATION, OPERATION AND MAINTENANCE

GENERAL

It is impossible to cover here in detail the complete rules for the installation of each of the different types of circuit breakers manufactured, but the following information is given relative to the most important points to be considered.

The instructions sent by the manufacturer should be carefully studied and followed in order to secure the best results.

SHIPMENT

Each circuit breaker, before leaving the factory, is carefully inspected and packed by workmen experienced in the proper handling and packing of electrical equipment. Immediately upon arrival, circuit breakers should be examined for any damage sustained while en route. If injury is evident or indication of rough handling is visible, the carrier (transportation company) and the manufacturer should be notified promptly.

STORAGE

When a circuit breaker can be set up immediately in its permanent location, it is advisable to do so even though the circuit breaker will not be placed in service for some time. If the circuit breaker is of the oil type, the tank should be cleaned and dried and then filled with oil.

If the circuit breaker cannot be installed in the proper location immediately and it is necessary to store the equipment, the circuit breaker should be kept in a clean, dry place. It should not be exposed to dirt, to the action of corrosive gases such as chlorine, or to possible mechanical injury.

If stored out of doors, the circuit breaker and any unassembled parts should be adequately protected from moisture, dirt, injurious gases and mechanical injury. Air insulated circuit breakers incorporating fibrous insulation and designed for indoor service should not be stored outdoors.

Machined parts of operating mechanisms, etc., should be slushed to prevent rusting and, if the circuit breakers are stored for any length of time, should be inspected periodically to see that rusting has not started and to insure their good mechanical condition.

Particular care should be taken to protect insulating parts which might absorb moisture. These parts should be stored in a dry room. Where possible, space heaters should be energized to minimize condensation.

UNPACKING

When unpacking a circuit breaker, the crating or boxing should be removed carefully with a nail puller. The fragile porcelain bushings and other parts are sometimes broken by driving the wrecking bar into crates or boxes carelessly.

Check all parts with the packing list.

Avoid bending, breaking or injuring any parts.

Do not leave screws, bolts, nuts, etc., in the packing material.

Clean the parts before assembling them.

See that the manufacturer's instruction books and tags are kept with the circuit breaker.

A thorough inspection should be made to see that the packing braces used to hold moving parts during shipment are taken out.

HANDLING

Cranes are convenient for handling circuit breakers. When using cable slings to support the circuit breaker, do not allow the slings to strike the bushings or other fragile parts, as any strain on these may cause them to crack or break. Before attempting to handle circuit breakers, their weight should be determined from the circuit breaker manufacturer in order that the lifting means will be of ample strength.

Copyright National Electrical Manufacturers Association
Provided by IHS under license with NEMA
No reproduction or networking permitted without license from IHS
Not for Resale

9009279 0004172 545

If cranes are not available, the circuit breaker should be moved in any convenient way, provided proper precautions are taken for supporting the weight of the circuit breaker and preventing dangerous tilting. Special care should be exercised to see that the circuit breaker is not injured through shocks or jars due to rough handling.

SELECTION OF LOCATION FOR INSTALLATION

The circuit breaker should be installed in a clean, dry place free from the destructive action of acids, alkalis or gases, such as chlorine, and where good ventilation can be secured.

The circuit breaker should be so located that it will be readily accessible for cleaning and inspection. Sufficient space should be provided for the easy removal of the oil tanks or other parts and for manual operation.

MOUNTINGS

A. Mounting in Cells

The construction of the cell structure should not be attempted until the approved working drawings are fully understood. If these drawings are not furnished by the manufacturer, they should be obtained from the party responsible for this information.

Cells and barriers should be made of some fireproof material such as steel, concrete or brick. Steel cells are recommended.

Satisfactory operation of a circuit breaker depends upon the correct design of the structure and its parts and can only be obtained with rigid construction.

Cell structures for air insulated circuit breakers should provide striking distances to live circuit breaker parts adequate for the service voltage on which the circuit breaker is applied.

Proper anchorage of the tie rods and foundation bolts should be provided. When the cells are built upon a concrete floor, this anchorage should be securely embedded in the concrete.

If the cell walls are made of concrete, particular care should be taken to carry these walls up plumb and true. The dimensions of the walls should follow accurately the dimensions given in the approved drawings.

Removable plates or doors are recommended for cells to prevent accidental contact with live parts.

It is recommended that the design of cell doors and barriers be such as to prevent communication between compartments.

It is recommended that cells be provided with adequate ventilation in the top and bottom in order to permit free circulation of air through the cell and, thus, to prevent an abnormal rise of temperature in the cell.

B. Mounting on Framework

If the circuit breaker has been shipped assembled in its framework, it will only be necessary to correctly locate and fasten the frame in position on its foundation. The foundation bolts should be left loose to permit the frame to be properly plumbed and leveled by inserting shims under floor flanges (or feet of frames) where necessary. After this has been done, the foundation bolts should be tightened and the frame securely fastened to its foundation.

Frameworks are sometimes supplied with strengthening members for shipment. These members should be removed after the framework has been placed in position and before the foundation bolts have been tightened.

The manufacturer's instructions should be carefully followed in setting up a frame-mounted circuit breaker which is shipped partly disassembled. The general procedure is:

1. Set up and properly level the frames.
2. Inspect contacts and, if necessary, adjust them.

C. Floor Mounted

Each unit should be placed in position on the floor and leveled. It should not be fastened securely to its foundation until the operating mechanism has been correctly aligned.

Copyright National Electrical Manufacturers Association
Provided by IHS under license with NEMA
No reproduction or networking permitted without license from IHS
Not for Resale

9009279 0004173 481

The manufacturer's instructions should be followed very carefully, making sure of the following points:

1. Carefully install the units on the foundation, making sure they are level, in line and properly spaced.

2. Connect the operating mechanisms so they will work freely.

3. Inspect contacts and, if necessary, adjust them.

D. Bushings

The bushings (insulators) should not be allowed to strike against parts of the framework, panel or other objects, when installing or handling the circuit breaker. Bushings are often broken, cracked or loosened in their supports by unnecessary jars due to careless handling.

Where heavy bushings have to be mounted in position by the purchaser, a rope sling will be found convenient for proper handling. The bushing should be lowered into place very carefully without letting the porcelain petticoating strike the sides of the framework, etc., as this may crack or otherwise injure the bushing.

Before attempting to handle the bushings, their weight should be determined from the circuit breaker manufacturer in order that the lifting means will be of ample strength.

In the case of high-voltage bushings which should be filled with oil at the time of installation, the drain plug at the lower end of the bushings should be inspected and, if necessary, tightened so that the bushing will not leak.

E. Operating Mechanism

As the proper alignment of the links, pins, etc., of the operating mechanism is essential to the proper operation of the circuit breaker, these should be carefully checked and the manufacturer's instructions followed explicitly. A circuit breaker should not be operated until a thorough inspection is made of the operating mechanism.

For large multipole circuit breakers, the connecting rods or couplings between units should be aligned before satisfactory operation is possible. The connecting rods or couplings should be adjusted so that, in closing the circuit breaker, the contacts of each unit are made at the same instant, and, in opening the circuit breaker, the contacts of each unit break at the same instant.

F. Contacts

Contacts should be adjusted in accordance with the manufacturer's instructions. Power-operated circuit breakers should have their contacts adjusted by closing the circuit breaker with the maintenance closing device.

Contacts should be kept clean of foreign material, oxides, etc. Where the contact surfaces have been plated to prevent the formation of high-resistance oxides, care should be taken not to file away the plated surface. Frequent operation of the circuit breaker is helpful in preventing the formation of high-resistance oxides. Bolted connections should be thoroughly cleaned and tightly clamped.

G. Manually Operated Circuit Breakers

The lever, handle or crank for manual operation should be connected to the operating mechanism if this connection has not been made by the manufacturer, making sure that all parts (shafts, pins, etc.) are properly aligned as shown in the manufacturer's instructions. Instead of attempting to bend or force parts together during installation, reference should be made to the manufacturer's instructions to see if they have been explicitly followed.

H. Power Operated Circuit Breakers

The connecting links, shafting, etc., between the circuit breaker pole unit mechanism and the operating mechanism (solenoid, motor or other device) supplied for power operation should all be carefully aligned. The circuit breaker should be operated slowly by hand before it is operated with power. The operation should be observed to see that it is smooth throughout the closing and opening of the circuit breaker, that no binding occurs and that no excessive play is noticeable between parts. The clearances at the mechanism stops should be checked to see that they are in accordance with the manufacturer's recommendations.

Copyright National Electrical Manufacturers Association
Provided by IHS under license with NEMA
No reproduction or networking permitted without license from IHS
Not for Resale

In the case of oil circuit breakers, the number of power operations without oil should be restricted to a minimum.

Circuit breakers using compressed air as an interrupting medium should not be operated with the maintenance closing device when there is pressure in the air receiver.

OIL

A. Sampling

A large-mouthed glass bottle should be used in sampling oil. The bottle should be cleaned, dried with benzine and free from moisture before it is used. A cork stopper should be used.

The sample of oil for dielectric tests should be at least 1 pint (16 ounces) and, if a number of tests are to be made, 1 quart (32 ounces).

Test samples should be taken only after the oil has settled for some time, varying from 8 hours for a barrel to several days for a large oil circuit breaker tank. Cold oil is much slower in settling. Oil samples from large oil circuit breakers should be taken from the valve at the bottom of the tank. Oil samples from small oil circuit breakers, which have no valves, and from barrels should be taken from the bottom. A brass or glass "thief" can be conveniently used for this purpose. The same method should be used for cleaning the "thief" as is used for cleaning the oil sample container.

When drawing samples from the bottom of a large oil circuit breaker or a large tank, sufficient oil should first be drawn off to make sure that the sample will be composed of oil from the bottom of the tank and not from the oil stored in the sampling pipe. A glass receptacle is desirable so that water, if present, may be readily observed. If moisture is found, an investigation of the cause should be made and a remedy applied. If water is not present in sufficient quantity to settle out, the oil may still contain considerable moisture in a suspended state and should be tested for dielectric strength.

B. Oil Testing

The device used for testing oil for dielectric strength should have a spark gap with disc terminals 1 inch in diameter. The testing cups should be cleaned thoroughly to remove any particles of cotton fiber, etc., and rinsed out with a portion of the oil to be tested. It is advisable to check the condition of the cup occasionally with dry benzine which should test not less than 25 kV.

The spark gap receptacle (cup) should be nearly filled with oil and allowed to stand for a few minutes to give air bubbles time to escape before making the test.

The voltage should be increased at a rate of approximately 3000 volts per second. Five breakdowns should be made on each filling, after which the receptacle should be emptied and refilled with fresh oil from the original sample. The average voltage of 15 tests (5 tests on each 3 fillings) is usually taken as the dielectric strength of the oil. It is recommended that the test be continued until the averages of at least 3 fillings are essentially constant.

The dielectric strength of the oil, when shipped, is at least 26 000 volts tested in the standard gap. If the oil in an oil circuit breaker in service tests at less than 16 500 volts, it should be filtered.

New oil having a dielectric strength less than 22 000 volts should not be put into the oil circuit breaker tank.

The oil should be checked for acidity and, if necessary, treated to remove acids or replaced.

C. Oil Drying

In removing moisture from the oil, it is preferable to filter the oil from one tank or barrel and discharge it to another. If necessary, the oil may be drawn from the bottom of a tank or barrel and discharged at the top. If there is much water in the oil, the oil should be allowed to settle, the moisture should be drawn off, and any moisture remaining should be treated separately. It should be noted that the usual methods of drying oil do not remove acid.

Before draining the oil from the circuit breaker or circulating the oil through a pipe line connected to a filter press, the oil circuit breaker should be disconnected from all electric power and the terminals should be grounded.

Copyright National Electrical Manufacturers Association
Provided by IHS under license with NEMA
No reproduction or networking permitted without license from IHS
Not for Resale

9009279 0004175 254

D. Filling Tanks With Oil

Before the oil circuit breaker is filled with oil, all accessories, such as valves and gauges should be fitted to the circuit breaker and made oil tight. The threads should be filled with shellac or its equivalent before being put in place.

When drums of oil are brought into a room which is warmer than they are, they should be allowed to stand before they are opened until there is no condensation on the outside and until they are thoroughly dry. In outdoor installations, the preparation and filling of the circuit breaker tank should be done on a clear, dry day or protection of some kind should be provided to prevent the absorption of moisture by the oil during the filling process.

Metal or oilproof rubber should be used. (Rubber hose containing sulphur should not be used as oil dissolves the sulphur. This may cause trouble as sulphur attacks copper.)

It is very important that the surface of the oil when cold (25°C American National Standard; 20°C International Standard*) be at the proper oil level as indicated by the gauge or marking on the tank.

* See par. 3-15 of IEEE "Guiding Principles for Selection of Reference Values for Electrical Standards," Publication No. 3. Copies are available from the Institute of Electrical and Electronics Engineers, 345 East 47th Street, New York, N. Y. 10017.

CONNECTIONS

Before making any electrical connections, every precaution should be taken to see that all leads to be connected to the circuit breaker are dead.

All terminals must be securely fastened to the leads and tightly clamped to the connection studs.

Connections to the circuit breaker are made by terminals or connection bars fastened to the end of the bushing. When tightening the terminal or clamp bolts, care should be taken not to turn the stud in the bushing (insulator).

All joints should be clean, bright, free from dents or burns and, preferably, silver plated or the equivalent.

All nuts on the current-carrying stud should be set up firmly against the terminal lugs to obtain good contact. The nut should turn freely on the stud. If the nut does not turn freely, it should not be forced down with a wrench but should be tapped lightly on its outer surfaces with a hammer and at the same time turned by hand. A nut that cannot be worked down in this manner will ruin the thread if any attempt is made to force it. If the joints are not made correctly, dangerous heating of the circuit breaker may result.

Cables and bars should be properly supported so that the circuit breaker is not subjected to unnecessary strains. The studs should not carry cable or bus-bar strains. Any strain which at first has no apparent effect on the stud alignment will, in time, force the studs to take up a new alignment, due to vibration during the opening and closing of the circuit breaker, and poor contact may result.

To avoid heating, the connecting leads should have a current-carrying capacity at least equal to that of the current-carrying parts of the circuit breaker.

To prevent weakening of the insulation, sharp turns, corners and edges should be avoided for insulated wiring. Care should be observed in installing cables so that bends are not used with a radius shorter than that recommended by the cable manufacturer.

Cables, bars or other conductors should be properly designed, supported and braced so as not to exert strains on the bushing or other circuit breaker parts. The use of bends, loops or flexible connections is recommended.

A. Secondary and Control Wiring

All wires should be run in conduit. Wires should be separate and remote from high-voltage leads and should not be in the same duct or even parallel to the high-voltage leads unless the distance separating the two sets of wiring is sufficient to prevent possible communication between them as a result of short circuits.

Copyright National Electrical Manufacturers Association
Provided by IHS under license with NEMA
No reproduction or networking permitted without license from IHS
Not for Resale

The wiring should be so installed that trouble on one circuit breaker cannot be communicated to the wiring of another circuit breaker.

Wiring of adequate size should be used for electrically operated circuit breakers so that, with the full operating current flowing to the operating mechanism, the voltage across the terminals of the operating mechanism will be not less than the minimum voltage of the range given in Table 8 of American National Standard C37.06.

B. Pneumatically Operated Circuit Breakers

For pneumatically operated circuit breakers, the piping should be of adequate size and arranged to pass air at a sufficient rate when the pressure in the circuit breaker storage tank has been reduced by previous operations. (See manufacturer's instructions.)

C. Ground Connections

The frame of each unit of a circuit breaker should be permanently grounded. The usual practice is to connect a heavy cable or solid copper bar to the frame and to the ground. The ground connections should be adequate to carry maximum line-to-ground fault current.

A good permanent low-resistance ground is essential for adequate protection. A poor ground may be worse than no ground at all, since it gives a false feeling of safety to those working around equipment and may also result in ultimate loss of life or damage to the apparatus.

AUXILIARIES

A. Tank Lifters

Tank lifters for raising or lowering the oil tank are generally used when the weight of the tank is too great to allow ready handling by hand. One tank lifter in a station is usually sufficient for all oil circuit breakers of the same type and capacity. It may be operated to lower or raise a tank of one circuit breaker (or unit) and then be moved to another circuit breaker (or unit).

When it is necessary to remove the oil tank, care should be taken that the bushings or contacts are not forced or jarred out of alignment. The tank must contain sufficient oil before it is replaced, except in the case of tanks which have oil filling connections. It is necessary to have the oil at the correct level to keep the contacts covered properly and also to have the proper air chamber above the oil for best operation of the circuit breaker.

B. Other Lifters

In the case of oilless circuit breakers, care should be used in removing heavy parts necessary for maintenance and inspection to prevent injury to the contacts or other parts. Where the parts are so heavy that they are difficult to handle by hand, suitable lifters should be used.

C. Time Element Dashpots

Oil dashpots should be examined periodically to see that they are properly filled with suitable oil in accordance with the manufacturer's instructions. By-pass and check valves should be examined and cleared. Dirty or gummy oil should be replaced. Substitution of oils other than those specified or furnished by the manufacturer should be avoided. Only in extreme emergencies should substitutions be made and, then, only by authorized and competent persons. If it is necessary to supply oil temporarily for dashpots, oil should be chosen which will not become thick at the lowest temperature to which it will be subjected. Clean oil having the proper characteristics is essential for correct operation.

D. Tripping Coils—Automatic Trip Operation

Tripping coils used in the secondary of instrument and bushing-type current transformers are calibrated in secondary current values, which, when multiplied by the ratio of the transformer used, give the corresponding primary or line current values. The markings on the calibrating tubes represent the ampere values required to lift the plunger and trip the circuit breaker.

Series trip coils are calibrated in primary current values, and the markings on the calibrated tubes represent the line current values required to trip the circuit breaker.

E. Undervoltage Trip Device

The proper holding and releasing action of undervoltage coils and mechanisms is dependent upon both mechanical adjustment and upon the application of

Copyright National Electrical Manufacturers Association
Provided by IHS under license with NEMA
No reproduction or networking permitted without license from IHS
Not for Resale

the voltage (and frequency for alternating-current systems) specified on the nameplate. These devices should be inspected periodically to insure that their operation is not too violent since such operation would cause unnecessary strains on them.

Alternating-current release mechanisms should be examined periodically to see that the iron circuit is properly sealed and that the pole pieces are cleaned of rust and make a true flat contact. Care on this point will prevent or lessen humming and failure of coils from excessive current due to open iron circuits.

When undervoltage devices are supplied for use in series with resistors, the connections should be carefully checked before full voltage is thrown across the operating coils.

F. Auxiliary Switches

The bearings of auxiliary switches should be oiled occasionally. A thin coat of petrolatum should be applied to the contact surfaces. A periodic inspection of the contacts for wear is recommended.

G. Resistors and Rectifiers

All connections to resistors and rectifiers should be kept tight. Each was designed for a specific duty, and the longest life will be obtained if overloading is avoided. Resistors or rectifiers should be kept free from dirt and other foreign matter and should be allowed adequate space for ventilation. The full value of each resistor or rectifier is needed for its particular duty. Short-circuiting a broken-down resistor is not advisable. In making replacements of broken-down or burnt-out resistors or rectifiers, the manufacturer's specifications should be followed explicitly.

FINAL INSTALLATION INSPECTION

After a circuit breaker has been installed and all mechanical and electrical connections have been completed, the following inspections and tests should be made:

1. See that the circuit breaker is properly set up and leveled on its supporting structure (panel, pipes, structural iron or steel frame, etc.).
2. See that heaters, where used, are operating correctly.
3. See that all bearing surfaces of the operating mechanism have been lubricated, where required.
4. Close the circuit breaker slowly by hand (when it is disconnected from the line) noting that the operating rod (or rods) and contacts are properly adjusted for correct alignment. Good contact should be made with the circuit breaker closed. Circuit breakers using compressed air as an interrupting medium should not be operated with the maintenance closing device if there is pressure in the air receiver.
5. See that the tanks of oil circuit breakers are filled with clean, dry oil to the proper level (oil line or gauge).
6. Inspect all insulated wiring to see that no damage has resulted during installation and that connections are tight.
7. Test the wiring for possible grounds, short circuits or open circuits.
8. See that all connections of control and secondary wiring are tight.
9. See that all current-carrying parts are correctly insulated.
10. See that all joints, whether bolted joints of copper bars or soldered (or clamped) joints made with wires or cables, are made correctly.
11. See that all covers and bolted connections of outdoor circuit breakers are securely tightened so as to prevent the entrance of moisture and that tanks of all oil circuit breakers are drawn tightly against their gaskets.
12. In the case of air circuit breakers, blow out all foreign material with dry air.

Copyright National Electrical Manufacturers Association
Provided by IHS under license with NEMA
No reproduction or networking permitted without license from IHS
Not for Resale

POWER OPERATED CIRCUIT BREAKERS

Power operated circuit breakers should be operated manually (by hand) first, to ensure that all parts move freely and without binding. After careful inspection has shown all parts to be in proper working order during the manual operation, the circuit breaker may be operated with power at normal operating voltage or air pressure.

MAINTENANCE

The safety and the successful functioning of connected apparatus depend upon the proper operation of the circuit breaker. Therefore, the circuit breaker should have regular systematic maintenance and inspection.

The following points require special attention:

1. Be sure that the circuit breaker and its mechanism is disconnected from all electric power, both high voltage and control voltage, before it is inspected or repaired.

2. Exhaust the pressure from air receiver of any compressed air circuit breaker before it is inspected or repaired.

3. After the circuit breaker has been disconnected from power lines, attach the grounding leads properly before touching any of the circuit breaker parts.

4. Inspect the operating mechanism periodically and keep the bearing surfaces of the toggles, rods and levers adequately lubricated where required.

5. Keep the mechanism clean.

6. Maintain contacts in good operating condition, as described by the manufacturer.

7. Be sure the circuit breaker is well grounded.

8. See that bolts, nuts, washers, cotter pins and all terminal connections are in place and tight.

9. Inspect the bushing (insulator) supports, as the vibration due to the operation of the circuit breaker may cause the bushings to move slightly and result in the misalignment of contacts.

10. Clean the bushings at regular intervals where abnormal conditions, such as salt deposits, cement dust or acid fumes, prevail to avoid flashovers resulting from the accumulation of foreign substances on bushing surfaces.

11. See that the oil is kept at the proper level in the tank (or tanks) and that the proper dielectric strength of the oil is maintained. (See instructions for testing oil, Part 6, Page 4.)

12. Test the oil every six months or oftener and change or filter it if necessary.

13. Filter the oil after successive openings under load, short circuit, etc., if it shows carbonization or if its dielectric strength is lowered because of dirt or suspended matter. Test the oil before replacing it in the tank. Carbonization is indicated by a flaky, black precipitate which floats in the oil when disturbed.

14. Do not allow moisture to come into contact with the oil during filtering.

15. Remove all oil at least once a year and thoroughly clean the tank (or tanks) and other parts which have been in contact with the oil, e.g., liners, bushings, lift rods, guides, etc.

16. On all indoor oil and gas-tight circuit breakers equipped with separating chambers to exhaust the circuit breaker during and after an operation, an exhaust header and necessary pipe lines must be provided to exhaust the gases out of doors.

17. Before entering large oil circuit breaker tanks after the oil has been drained, care should be taken to see that sufficient time has elapsed to permit the gas residue remaining in the circuit breaker to escape.

Copyright National Electrical Manufacturers Association
Provided by IHS under license with NEMA
No reproduction or networking permitted without license from IHS
Not for Resale

9009279 0004179 9TT

18. Clean and, if necessary, dry the insulating materials across the interrupter and to ground or parts of different potential on all air or oilless circuit breakers (refer to the manufacturer's instruction book for specific instructions for each type of circuit breaker).

19. At all inspections operate the circuit breaker by hand to see that the mechanism works smoothly and correctly before operating it with power.

20. Circuit breakers using compressed air as the interrupting medium should not be operated with the maintenance closing device if there is pressure in the air receiver.

21. A circuit breaker with the oil tanks removed should not be operated with power any oftener than is absolutely necessary.

22. When servicing circuit breakers having vacuum interrupters, be certain to ground the opposite ends of the interrupter and the midband rings, if any, following the removal of the circuit breaker from service or following dielectric testing before attempting to handle interrupters.

23. It is again strongly urged that the manufacturer's instructions for each circuit breaker be carefully read and followed.

SPARE PARTS

It is recommended that sufficient spare parts be carried in stock to enable the operators of circuit breakers to promptly replace any worn, broken or damaged parts. It will be readily appreciated that a stock of parts reduces delays in service and saves time and expense. The manufacturer will provide the purchaser with a list of recommended spare parts upon request.

Authorized Engineering Information 8-2-1934, revised 4-27-1944; 12-17-1947; 3-15-1956; 3-12-1975.

Copyright National Electrical Manufacturers Association
Provided by IHS under license with NEMA
No reproduction or networking permitted without license from IHS
Not for Resale

9009279 0004180 611

HIGH VOLTAGE POWER CIRCUIT BREAKER VOTING CLASSIFICATION

OF THE

SWITCHGEAR SECTION

OF THE

NATIONAL ELECTRICAL MANUFACTURERS ASSOCIATION

MEMBER COMPANIES

Allis-Chalmers Corp.
Jackson, Miss. 39208

Federal Pacific Electric Co.
Newark, N.J. 07101

General Electric Co.
Philadelphia, Pa. 19142

GTE Sylvania Inc.
Zinsco Electrical Products
Waltham, Mass. 02154

I-T-E Imperial Corp.
Spring House, Pa. 19477

McGraw-Edison Power Systems Division
Canonsburg, Pa. 15317

Westinghouse Electric Corp.
Trafford, Pa. 15085

Printed in U.S.A.

Copyright National Electrical Manufacturers Association
Provided by IHS under license with NEMA
No reproduction or networking permitted without license from IHS
Not for Resale

9009279 0004181 558

NEMA STANDARDIZATION

The purpose of NEMA Standards, their classification and status are set forth in certain clauses of the NEMA Bylaws, which are quoted below:

Purpose of Standards

National Electrical Manufacturers Association Standards are adopted in the public interest and are designed to eliminate misunderstandings between the manufacturer and the purchaser and to assist the purchaser in selecting and obtaining the proper product for its particular need. Existence of a National Electrical Manufacturers Association Standard does not in any respect preclude any member or nonmember from manufacturing or selling products not conforming to the standard.

(Bylaw—Art. V, Sec. 1)

Definition of a Standard

A standard of the National Electrical Manufacturers Association defines a product, process or procedure with reference to one or more of the following: nomenclature, composition, construction, dimensions, tolerances, safety, operating characteristics, performance, rating, testing, and the service for which they are designed.

(Bylaw—Art. V, Sec. 2, Subsection A)

Dimensions

Where dimensions are given for interchangeability purposes, alternate dimensions satisfying the other provisions of the standards publication may be capable of otherwise equivalent performance.

(NEMA Policy Memorandum 84-2, dated June 7, 1984)

Classes of Standards

National Electrical Manufacturers Association Standards are of two classes:

1. NEMA Standard, which relates to a product commercially standardized and subject to repetitive manufacture, which standard has been approved by at least 90 percent of the members of the Subdivision eligible to vote thereon;
2. Suggested Standard for Future Design, which may not have been regularly applied to a commercial product, but which suggests a sound engineering approach to future development, which standard has been approved by at least two-thirds of the members of the Subdivision eligible to vote thereon.

(Bylaw—Art. V, Sec. 2, Subsection B)

Authorized Engineering Information

Authorized Engineering Information consists of explanatory data and other engineering information of an informative character not falling within the classification of NEMA Standard or Suggested Standard for Future Design.

(Bylaw—Art. V, Sec. 6, 1st Sentence)

Official Standards Proposal

An Official Standards Proposal is an official draft of a proposed standard which is formally recommended to an outside organization(s) for consideration, comment and/or approval.

(Bylaw—Art. V, Sec. 4, Subsection A)

Identification of Status

Standards in NEMA Standards Publications are identified in the foreword or following each standard as "NEMA Standard" or "Suggested Standard for Future Design." These indicate the status of the standard. These words are followed by a date which indicates when the standard was adopted in its present form by the Association.

The material identified as "Authorized Engineering Information" and "Official Standards Proposal" is designated similarly.

Copyright National Electrical Manufacturers Association
Provided by IHS under license with NEMA
No reproduction or networking permitted without license from IHS
Not for Resale