NEMA STANDARDS PUBLICATION NO. SG 4

nema

Alternating-Current High-Voltage Circuit Breakers

NEMA

NATIONAL ELECTRICAL MANUFACTURERS ASSOCIATION ■ 2101 L STREET, N.W., WASHINGTON, D.C. 20037

Copyright National Electrical Manufacturers Association
Provided by IHS under license with NEMA
No reproduction or networking permitted without license from IHS

Not for Resale

NEMA SG 4–1990

SG 4

ALTERNATING-CURRENT HIGH-VOLTAGE CIRCUIT BREAKERS

Published by:

National Electrical Manufacturers Association
2101 L Street, N.W.
Washington, DC 20037

© 1990 by National Electrical Manufacturers Association

Copyright National Electrical Manufacturers Association
Provided by IHS under license with NEMA
No reproduction or networking permitted without license from IHS
Not for Resale

TABLE OF CONTENTS

		Page
	FOREWORD	i
	SCOPE	ii
Section 1	REFERENCED STANDARDS AND DEFINITIONS	
	Referenced Standards	1
	Definitions	2
Section 2	RATING STANDARDS	
	Applicable American National Standards	6
	Tables of Suggested Standards For Future Design	6
Section 3	FUNCTIONAL COMPONENTS AND REQUIREMENTS	
	Applicable American National Standards	10
	Seismic Withstand	10
	Tank-type Outdoor Oil Circuit Breakers	10
	Outdoor Circuit Breakers	10
	Operating Mechanisms for Outdoor Circuit Breakers	11
	Thread Dimensions for Terminal Studs	11
	Instrument Current Transformers	12
	Bushing Potential Devices for Tank-type Outdoor Oil Circuit Breakers	15
	Undervoltage Trip Device	17
	Secondary and Control Wiring (Small Wiring)	17
	Pressurized Fiberglass-reinforced Plastic Components	17
	Pressurized Systems	18
	Preferred Mounting Flange Dimensions of Bushings for Use in Oil-filled Apparatus	18
Section 4	TESTING STANDARDS	
	Applicable American National Standards	27
	Radio Influence Voltage Tests (Design Test)	27
	Bushing Potential Device Test (Production Test)	28
	Nonpressurized Porcelain Components (Design Test)	28
	Pressurized Components	29
	Noise Requirements	31
Section 5	APPLICABLE STANDARDS	
	Applicable American National Standards	34
	Circuit Breakers for AC Motor Starting	34
	Three-coil Trip or Equivalent Fault Protection	36
	Circuit Breakers Normally Designed for Three-phase Systems When Applied to Single-Phase Systems Below 72.5 kV Having One Conductor Grounded	36
	Neutral Grounding Circuit Breakers	36
	Multiple Single-pole Circuit Breakers	37
	Repetitive Duty–Indoor Circuit Breakers for Arc Furnace Switching	37
Section 6	RECOMMENDED INSTALLATION, OPERATION, AND MAINTENANCE PROCEDURES	
	General	39
	Shipment	39
	Storage	39
	Unpacking	39
	Handling	39
	Selection of Location for Installation	39

Copyright National Electrical Manufacturers Association
Provided by IHS under license with NEMA
No reproduction or networking permitted without license from IHS
Not for Resale

Page

Mountings 40
Oil 41
Auxiliaries 43
Final Installation Inspection 44
Power Operated Circuit Breakers 45
Maintenance 45
Spare Parts 46

Tables

2-1 Preferred Ratings for Outdoor Circuit Breakers 72.5 KV and above 6
2-1A Preferred Capacitance Current Switching Ratings for Outdoor Circuit Breakers 72.5 kV and Below 6
2-2 Preferred Ratings for Outdoor Circuit Breakers 121 kV and Above 9
2-2A Preferred Capacitance Current Switching Ratings for Outdoor Circuit Breakers 121 kV and Above 9
3-1 Thread Dimensions for Terminal Studs 12
3-2 Accuracy Class Ratings 13
3-3 Ratings For Multiratio Current Transformers For Relaying Service 14
3-4 Rated Voltage Classes, Rated Burdens, and Secondary Voltages for Bushing Potential Devices 16
4-1 Limits of Radio Influence Voltages 27
4-2 Sound Level Limits 29
4-3 Permissible Noise Exposure 32
5-1 Operating Capacity 37

Figures

3-1 Typical Arrangement Of Two Bushing-type Current Transformers 21
3-2 Current Transformer and Lead Identification (Dead Tank) 22
3-3 Current Transformer and Lead Identification (Live Tank) 23
3-4 Connections of Secondary Burdens (1 Current Transformer) 24
3-5 Connections of Secondary Burdens (2 Current Transformers) 24
3-6 Connections of Secondary Burdens (2 Current Transformers) 25
3-7 Connections of Secondary Burdens (2 Current Transformers) 25
3-8 Design Response Spectra, Foundation Acceleration 26
5-1 Method of AC Motor Starting 35
5-2 Circuit Breaker Installation (11,000 Volts) 36
5-3 Circuit Breaker Installation (19,000 Volts) 36

Copyright National Electrical Manufacturers Association
Provided by IHS under license with NEMA
No reproduction or networking permitted without license from IHS
Not for Resale

Foreword

This is one of five NEMA Standards Publications covering the range of low- to high-voltage switchgear products. Such products are generally applied to utility and industrial use with a portion going to commercial applications. User and general interest input played a significant part in the development of the product requirements carried by this publication. It, as well as other NEMA Standards Publications, is not intended to stand alone for without exception:

1. It adopts by reference the appropriate American National Standards (approved by American National Standards Committee C37) as the main body of this NEMA publication.
2. It offers a vehicle for getting into print the proposed NEMA revisions of the pertinent C37 Standards, until such time as those revisions can be evaluated, approved, and published as a revision of the particular American National Standard.
3. It covers additional information about a product of specific interest to the manufacturing community, which the American National Standards Committee does not include in its scope.

Within this NEMA publication, therefore, the main focus is on American National Standards and the consensus method of standards approval used by ANSI.

Switchgear standards are, for the most part, developed through the combined and separate effort of IEEE and NEMA. Accredited Standards Committee C37 serves as the administrator through which are channeled all switchgear proposals intended for eventual publication as American National Standards. It is within these organizations that the principal manufacturer-user exchange is accomplished. This exposes product requirements to those people having the direct responsibility for the use, design, application, maintenance, and acceptance of the products and thus assures a most objective and critical review within the voluntary standards program.

SG 2-1986 *High Voltage Fuses*

SG 13-1983 *Automatic Circuit Reclosers, Automatic Line Sectionalizers and Oil-filled Capacitor Switches for Alternating-current Systems*

These standards are periodically reviewed by the High Voltage Power Circuit Breaker Voting Classification of the Switchgear Section of NEMA for any revisions necessary to keep them up-to-date with advancing technology. Proposed or recommended revisions should be submitted to:

Vice President, Engineering
National Electrical Manufacturers Association
2101 L Street, N.W.
Washington, DC 20037

Copyright National Electrical Manufacturers Association
Provided by IHS under license with NEMA
No reproduction or networking permitted without license from IHS
Not for Resale

Scope

This Standards Publication encompasses:

a. All ratings for outdoor circuit breakers above 1000 volts for alternating-current service. (Automatic circuit reclosers are excluded.) Circuit breakers for service in metal-clad enclosures are included in NEMA Standard SG 5.

b. Attachments for these circuit breakers, such as bushing current transformers, bushing potential devices, interlocks, undervoltage devices, shunt trips, overcurrent trips, and such, auxiliaries sold with the breakers such as closing relays, structural steel supports, and such.

c. Renewal, modernizing, and spare parts for these circuit breakers and attachments.

Copyright National Electrical Manufacturers Association
Provided by IHS under license with NEMA
No reproduction or networking permitted without license from IHS
Not for Resale

ALTERNATING-CURRENT HIGH-VOLTAGE CIRCUIT BREAKERS

Section 1
REFERENCED STANDARDS AND DEFINITIONS

1.1 REFERENCED STANDARDS

The following publications are adopted in whole and in part as indicated herein as referenced in this Standards Publication:

American National Standards Institute, Inc. (ANSI)
1430 Broadway
New York, NY 10018

C37.04-1979 (R 1989)	*Rating Structure for AC High-Voltage Circuit Breakers (including Supplements C37.04a and C37.04b) Rated on a Symmetrical Current Basis*
C37.06-1987 (R 1989)	*Preferred Ratings and Related Required Capabilities for AC High-Voltage Circuit Breakers Rated on a Symmetrical Current Basis*
C37.09-1979	*Test Procedure for AC High-Voltage Circuit Breakers (Including Supplement C37.09a)*
C37.11-1979	*Requirements for Electrical Control for AC High-Voltage Circuit Breakers Rated on a Symmetrical Current Basis and a Total Current Basis*
C37.12-1981	*Guide Specifications for AC High-Voltage Circuit Breakers Rated on a Symmetrical Current Basis and a Total Current Basis*
C37.012-1979 (R 1989)	*Application Guide for Capacitance Current Switching AC High-Voltage Circuit Breakers*
C37.20.1-1987	*Metal-Enclosed Low Voltage Power Circuit Breaker Switch Gear Assemblies*
C37.20.2-1987	*Metal Clad Station Type Cubicle Switchgear*
C37.85-1989	*Safety Requirements for X-Radiation Limits for AC High-Voltage Power Vacuum Interrupters Used in Power Switchgear*
C37.100-1981 (R 1989)	*Definitions for Power Switchgear*
C50.10-1977	*General Requirements for Synchronous Machines*
C57.13-1978 (R 1987)	*Requirements for Instrument Transformers*
C84.1-1982	*Voltage Ratings for Electric Power Systems and Equipment (60 Hz) (Including Supplement C84.1a)*
S1.1-1960 (R 1976)	*Acoustical Terminology (Including Mechanical Shock and Vibration)*
S1.4-1983	*Specification for Sound Level Meters*
S1.13-1971 (R 1986)	*Methods for the Measurement of Sound Pressure Levels*

American Society of Mechanical Engineers (ASME)
Order Department
22 Law Drive, Box 300
Fairfield, NJ 07006-2300

II-86	*Material Specifications*

Y0002A – Part A (1989) – Ferrous Materials
Y0002B – Part B (1989) – Nonferrous Materials
Y0002C – Part C (1989) – Welding Rods, Electrodes and Filler Metals

Copyright National Electrical Manufacturers Association
Provided by IHS under license with NEMA
No reproduction or networking permitted without license from IHS
Not for Resale

VIII-89 *Pressure Vessels-Y00081 or SI0081, Div. 1*
Primary Alternation-Y00082 or SI0082, Div. 2

IX-89 *Welding and Brazing Qualifications-Y00090 or SI0090*
Fiberglass-Reinforced Plastic Pressure Vessels-Y00100 or SI0100

Institute of Electrical and Electronics Engineers, Inc. (IEEE)
445 Hoes Lane, P.O. Box 1331
Piscataway, NJ 08855-1331

ANSI/IEEE 3-1982 *Recommended Practice in the Selection of Reference Ambient Conditions for Test Measurements of Electrical Apparatus*

ANSI/IEEE 21-1976 *Requirements and Test Procedure for Outdoor Apparatus Bushings*

IEEE Std 320-1972 (ANSI C37.010-1979) *Application Guide for AC High-Voltage Circuit Breakers (Including Supplements)*

National Electrical Manufacturers Association (NEMA)
Standards Publications Office
2101 L Street, N.W., Suite 300,
Washington, DC 20037

NEMA 107-1987 *Method of Measurements of Radio Influence Voltage (RIV) of High-Voltage Apparatus*

1.2 DEFINITIONS

1.2.1 Applicable American National Standards

ANSI C37.100 has been approved by NEMA and, with the following additions, constitutes Section 1 of this publication.

NEMA Standard 3-5-1990.

1.2.2 Air System for Operating Mechanism

An air system is an assembly of parts and devices which provide compressed air for the operation of a circuit breaker or circuit breaker operating mechanism. It shall be permitted to include equipment external to the circuit breaker or equipment, or both, that is an integral part of the circuit breaker or circuit breaker mechanism.

1.2.2.1 AIR RECEIVER

An air receiver is a tank or other closed vessel for storing air under pressure.

1.2.2.2 HEADER

A header is a main pipe connection from which compressed air is drawn at various points to supply several circuit breakers or the several poles of one circuit breaker.

1.2.2.3 DUMP VALVE

A dump valve is a valve arranged for rapidly releasing compressed air from a confined space.

1.2.2.4 EXHAUST PORTS

Exhaust ports are the openings through which compressed air is released from a confined space.

1.2.2.5 AIR CONTROL VALVE

An air control valve is a valve that is responsive to an applied signal for releasing air to or from an operating cylinder.

1. *Electrical Control Valve*—An electrical control valve is a valve with operation that is initiated electromagnetically as by a solenoid.
2. *Pneumatic Control*—A pneumatic control valve is a valve with operation that is initiated by compressed air.
3. *Electropneumatic Control Valve*—An electropneumatic control valve is a valve with operation that is initiated electromagnetically and controlled, timed and completed pneumatically.

NEMA Standard 3-5-1990.

1.3 CONTROL SYSTEM FOR COMPRESSED-GAS CIRCUIT BREAKERS

A control system is a combination of pneumatic and electrical control equipment by which sequential operation of the circuit breaker parts is obtained.

1.3.1 Temperature Compensated Pressure Switch

A temperature compensated pressure switch is a component to monitor gas density in electrical equipment.

Copyright National Electrical Manufacturers Association
Provided by IHS under license with NEMA
No reproduction or networking permitted without license from IHS
Not for Resale

1.3.2 Low-pressure Interlock

A low-pressure interlock is a device that operates pneumatically to prevent automatic circuit breaker operation when the available gas pressure falls below a safe value.

1.3.3 Hand Trip Valve

A hand trip valve is a manually operated pneumatic device to open the circuit breaker or a pole of the circuit breaker when the electrical control is inoperative.

1.3.4 Sequence Switch Interlock

A sequence switch interlock is a pneumatic or electrical device that prevents the opening of the sequence switch until after the operation of the interrupter.

NEMA Standard 3-5-1990.

1.4 CROSS BAR (BLADE)

A cross bar is that current-carrying part to which the lift rod of a circuit breaker is attached.

NEMA Standard 3-5-1990.

1.5 DEVICES

1.5.1 Emergency Closing Device

An emergency closing device for a power operated circuit breaker is a device for providing the equivalent of full operating energy by other than the normal means. It permits closing the circuit breaker on an energized circuit under fault conditions, in an emergency, when the normal power source is unavailable.

1.5.2 Pressure Switch

A pressure switch is a switch that closes or opens an electrical circuit in response to a predetermined value of pressure.

1.5.2.1 Motor Control Pressure Switch

A motor control pressure switch is a switch that governs the operation of a motor in order to maintain the desired operating pressure.

1.5.2.2 Alarm Pressure Switch

An alarm pressure switch is a switch that initiates a signal when the operating pressure is above or below the desired range.

1.5.2.3 Lockout Pressure Switch

A lockout pressure switch is a switch that prevents the electrical operation of a circuit breaker if the operating pressure is below a predetermined value.

1.5.3 Strainer

A strainer is a screen or filter in the system to prevent the passage of foreign particles.

1.5.4 Check Valve

A check valve is a valve which prevents flow in one direction.

NEMA Standard 3-5-1990.

1.6 HYDRAULIC SYSTEM FOR HYDRAULICALLY OPERATED MECHANISMS

A hydraulic system is an assembly of parts and devices that provides for the control of hydraulic energy for the operation of a circuit breaker or circuit breaker operating mechanism.

1.6.1 Accumulator

An accumulator is a device in which potential energy is prestored by compressed and completely confined gas and is transmitted through the medium of a liquid, usually oil.

1.6.2 Hydraulic Control Valve

A hydraulic control valve is a valve that is responsive to an applied signal for controlling hydraulic fluid.

NEMA Standard 3-5-1990.

1.7 INTERRUPTER FOR COMPRESSED AIR-BLAST CIRCUIT BREAKERS

An interrupter is an assembly of pneumatic and mechanical parts operable to obtain interruption of current flow.

1.7.1 Interrupter Column

An interrupter column is a movable or stationary insulating column that contains the interrupter element and the connecting pneumatic or mechanical devices necessary for the operation of the interrupter by the circuit breaker mechanism.

1.7.2 Interrupter Head

An interrupter head is the interrupter element within the interrupter column or pole unit where current interruption occurs.

1.7.3 Muffler

A muffler is a device located with respect to the interrupter to reduce the exhaust noise level.

1.7.4 Exhaust Header

An exhaust header is a receiver for gases exhausted from the arc chute or interrupter head. It is common to one or more pole units and collects and momentarily delays the exhaust of these gases to atmosphere.

Copyright National Electrical Manufacturers Association
Provided by IHS under license with NEMA
No reproduction or networking permitted without license from IHS
Not for Resale

1.7.5 Blade Tip

A blade tip is the contact-making end of a blade-shaped contact member.

1.7.6 Fixed Gap

A fixed gap is a gap resulting from contact motion over a fixed distance for the purpose of obtaining arc length control.

1.7.7 Air Line

An air line is tubing or piping used for moving compressed air from one point to another in any closed air system.

NEMA Standard 3-5-1990.

1.8 LIFT OR PUSH RODS

Lift or push rods are insulating rods to which the moving contacts of a circuit breaker are attached and through which they are operated.

NEMA Standard 3-5-1990.

1.9 INSULATING MEDIA

1.9.1 Oil

1.9.1.1 Inhibited Oil

Inhibited oil is mineral insulating oil to which a synthetic oxidation inhibitor has been added.

1.9.1.2 Uninhibited Oil

Uninhibited oil is mineral insulating oil to which no synthetic oxidation inhibitor has been added.

NEMA Standard 3-5-1990.

1.9.2 Sulfur Hexafluoride (SF_6)

A gaseous compound that is utilized as an insulating or interrupting, or both medium in circuit breakers.

NEMA Standard 3-5-1990.

1.10 RECLOSING DUTY (DUTY CYCLE)

Reclosing duty is a requirement of service that demands that a circuit breaker close a number of times in succession to restore power to a faulted circuit (or system) with a time interval between successive closings before the circuit breaker locks out in its open position.

NEMA Standard 3-5-1990.

1.11 INTERRUPTER RESISTOR

An interrupter resistor is a device used in conjunction with the interrupter to reduce short-circuit current or the rate of rise of recovery voltage across separable contacts at interruption, or both, or to equalize voltages across two or more separable contacts in series at and after interruption or to assist in controlling voltage surges on closing.

NEMA Standard 3-5-1990.

1.12 RESISTOR PROBE

A resistor probe is a metallic member that is used in conjunction with the interrupter to provide for arc transferor the insertion of a resistor as contacts separate, or both, or close during circuit breaker operation.

NEMA Standard 3-5-1990.

1.13 SEQUENCE SWITCH

A sequence switch is a switch that is connected in series with an interrupter and interlocked with the interrupter so that it will not open until after the operation of the interrupter.

1.13.1 Isolating Switch

An isolating switch is a sequence switch that is designed to hold rated voltage across its contacts.

1.13.2 Rotating Column

A rotating column is an insulating column structure that can rotate on its base and to which are affixed interrupter heads or sequence switch contacts made operable by rotation of the column.

NEMA Standard 3-5-1990.

1.14 STROKE

Stroke is the distance covered by the moving contacts between the fully closed and fully opened (at rest) position. For circuit breakers with pivoted contact blades, the stroke is the distance covered by the moving contact blade tip between the fully closed and fully opened positions.

NEMA Standard 3-5-1990.

1.15 DIRECTION OF FLOW

1.15.1 Downstream

"Downstream" refers to the same direction as that of the natural flow of any medium away from a reference point.

1.15.2 Upstream

"Upstream" refers to the direction opposite to the natural flow of any medium away from a reference point.

NEMA Standard 3-5-1990.

1.16 EYE-TYPE CURRENT TRANSFORMER

An eye-type current transformer is a current transformer that has a fixed primary winding physically separated from multiple-secondary coils of the bushing-current-transformer type. The primary and secondary windings are assembled as an integral structure. The secondary windings have a conductive shield to provide protection against high voltage.

NEMA Standard 3-5-1990.

Copyright National Electrical Manufacturers Association
Provided by IHS under license with NEMA
No reproduction or networking permitted without license from IHS

Not for Resale

1.17 REGULATION

1.17.1 Voltage Regulation

Voltage regulation is the deviation in ratio and phase angle of the secondary voltage as a function of primary line-to-ground voltage variation over a specified range with a constant linear impedance burden.

1.17.2 Burden Regulation

Burden regulation is the deviation in ratio and phase angle of the secondary voltage as a function of burden variation over a specified range with a constant rated primary line-to-ground voltage.

NEMA Standard 3-5-1990.

Copyright National Electrical Manufacturers Association
Provided by IHS under license with NEMA
No reproduction or networking permitted without license from IHS
Not for Resale

Section 2
RATING STANDARDS

2.1 APPLICABLE AMERICAN NATIONAL STANDARDS

ANSI C37.04, C37.04a, C37.04b, and C37.06, have been approved by NEMA and, with the following additions, constitute Section 2, of this publication.

NEMA Standard 3-5-1990.

Table 2-1
PREFERRED RATINGS FOR OUTDOOR CIRCUIT BREAKERS 72.5 kV AND BELOW INCLUDING CIRCUIT BREAKERS APPLIED IN GAS INSULATED SUBSTATIONS

Rated Maximum Voltage (1)(13)* kV, rms	Rated Voltage Range Factor K (2)	Rated Continuous Current at 60 Hz (3) Amperes, rms	Rated Short-Circuit Current* (at Rated Max. kV) (4)(5)(6)(17) kA, rms	Transient Recovery Voltage (14)(15)			Rated Interrupting Time (7) Cycles	Rated Maximum Voltage Divided by K kV, rms	Maximum Symmetrical Interrupting Capability and Rated Short Time Current (4)(5)(8) kA, rms	Closing and Latching Capability 2.7K times Rated Short-Circuit Current (4) kA, Crest
				Rated Time to Point P $T_2\mu$ sec	Rated Rate R kV/μ sec	Rated Delay Time $T_1\mu$ sec				

TABLE VALUES UNDER DEVELOPMENT

NOTES FOR TABLES 2-1 and 2-2

(Numbers in parentheses in the tables refer to the following correspondingly numbered notes)

For service conditions, definitions, and interpretation of ratings, tests, and qualifying terms, see ANSI/IEEE C37.04, ANSI/IEEE C37.09, and ANSI/IEEE C37.100.

The interrupting ratings are for 60-Hz systems. Applications on 25-Hz systems should receive special consideration. Current values have been rounded off to the nearest kiloampere (kA) except that two significant figures are used for values below 10 kA.

1. The voltage rating is based on ANSI C84.1, where applicable, and is the maximum voltage for which the breaker is designed and the upper limit for operation.
2. The rated roltage range factor, K, is the ratio of rated maximum voltage to the lower limit of the range of operating voltage in which the required symmetrical and asymmetrical current interrupting capabilities vary in inverse proportion to the operating voltage.
3. The 25-Hz continuous current ratings in amperes are given herewith following the respective 60-Hz rating: 600–700; 1200–1400; 2000–2250; 3000–3500.
4. Related Required Capabilities. The following related required capabilities are associated with the short-circuit current rating of the circuit breaker.
   a. Maximum symmetrical interrupting capability (kA, rms) of the circuit breaker is equal to K times rated short-circuit current.
   b. 3-second short-time current carrying capability (kA, rms) of the circuit breaker is equal to K times rated short-circuit current.
   c. Closing and latching capability (kA, rms) of the circuit breaker is equal to 1.6 K times rated short-circuit current. If expressed in peak amperes, the value is equal to 2.7 K times rated short-circuit current.
   d. 3-second short-time current carrying capability and closing and latching capability are independent of operating voltage up to and including rated maximum voltage.
5. To obtain the required symmetrical current interrupting capability of a circuit breaker at an operating voltage between $1/K$ times rated maximum voltage and rated maximum voltage, the following formula shall be used:

$$\text{Required symmetrical current interrupting capability} = \text{rated short-circuit current} \times \frac{\text{(rated maximum voltage)}}{\text{(operating voltage)}}$$

   For operating voltages below $1/K$ times rated maximum voltage, the required symmetrical current interruptin capability of the circuit breaker shall be equal to K times rated short-circuit current.
6. With the limitation stated in 5.10 of ANSI/IEEE C37.04, all values apply for polyphase and line-to-line faults. For single phase-to-ground faults, the specific conditions stated in 5.10.2.3 of ANSI/IEEE C37.04 apply.

Copyright National Electrical Manufacturers Association
Provided by IHS under license with NEMA
No reproduction or networking permitted without license from IHS
Not for Resale

7. The ratings in this column are on a 60-Hz basis and are the maximum time interval to be expected during a breaker opening operation between the instant of energizing the trip circuit and interruption of the main circuit on the primary arcing contacts under certain specified conditions. The values may be exceeded under certain conditions as specified in 5.7 of ANSI/IEEE C37.04.
8. Current values in this column are not to be exceeded even for operating voltages below $1/K$ times rated maximum voltage. For voltages between rated maximum voltage and $1/K$ times rated maximum voltage, follow (5) above.
10. Table 2-1 only. Rated E_2 = 1.88 times rated maximum voltage. These circuit breakers have a rated transient recovery voltage envelope of 1 – cosine (one minus cosine) configuration. Rated values for R and T_1 are not applicable.
11. Table 2-1 only. The T_2 values and the multipliers in Table 6 are related required capabilities but need not be demonstrated by test.
12. If the source of power to a circuit breaker is a single transformer or a bank of transformers and there are no substantial capacitors or loaded feeders connected to the source side of the circuit breaker, the transient recovery voltage may be more severe than those covered in these tables. T_2 values for these applications are being developed.
13. Table 2-2 only. The circuit breakers listed for voltage classes 242 kV and above are intended for application only on systems that are effectively grounded, as defined in ANSI/IEEE 32.
14. Table 2-2 only. E_2 = 1.76 times rated maximum voltage; $E_1 = 1.5\text{–}\sqrt{2/3}$ times rated maximum voltage.
15. Table 2-2 only. For all circuit breakers applied in gas insulated substation installations, T_1 = 2.0 microseconds.
16. Table 2-1 only. Rated permissible tripping delay time (Y) = 2 seconds.
17. Table 2-2 only. Rated permissible tripping delay time (Y) = 1 second.

*For the related required capabilities associated with the rated short-circuit current of the circuit breaker, see Note 4.

Suggested Standard For Future Design 3-5-1990.

Copyright National Electrical Manufacturers Association
Provided by IHS under license with NEMA
No reproduction or networking permitted without license from IHS
Not for Resale

Table 2-1A
PREFERRED CAPACITANCE CURRENT SWITCHING RATINGS FOR OUTDOOR CIRCUIT BREAKERS 72.5 kV and BELOW, INCLUDING CIRCUIT BREAKERS APPLIED IN GAS INSULATED SUBSTATIONS

Rated Maximum Voltage kV, rms	Rated Continuous Current(3) Amperes, rms	Rated Short-Circuit Current kA,rms	General-purpose Circuit Breakers		Definite-purpose Circuit Breakers Rated Capacitance Switching Current(2)				
			Rated Capacitance Switching Current (1)(2)*		Overhead Line Current Amperes, rms	Shunt Capacitor Bank or Cable			
			Overhead Line Current Amperes, rms	Shunt Capacitor Bank or Cable Isolated Current(3) Amperes, rms		Isolated Current(3) Amperes, rms	Back-to-Back		
							Current(3) Amperes, rms	Inrush Current (4)(5)	
								Peak Current kA	Frequency Hz

TABLE VALUES UNDER DEVELOPMENT

Suggested Standard For Future Design 3-5-1990.

NOTES FOR TABLES 2-1A and 2-2A.

(Numbers in parentheses in the tables refer to the following correspondingly numbered notes.)

1. No ratings for back-to-back shunt capacitor bank or cable switching applications are established for general-purpose circuit breakers. The shunt capacitor bank or cable shall be electrically isolated as defined in 5.13.2 of ANSI/IEEE C37.04.

   For general-purpose circuit breakers exposed to transient inrush currents from nearby capacitor banks during fault conditions, the capacitance transient inrush peak current on closing shall not exceed the lower of either 2 times K times rated short-circuit current (2 K I), or 50,000 peak amperes. The product of transient inrush current peak and transient inrush current frequency shall not exceed 2×10^7. The service capability and circuit breaker condition for this duty shall be as specified in ANSI/IEEE C37.04, 5.10.3.3. For reference, see ANSI/IEEE C37.012, 4.10.2.
2. The capacitance switching current ratings are the highest values that the circuit breaker shall be required to switch at any voltage up to rated maximum voltage.
3. When applied on shunt capacitor banks, the current rating shall be selected to include the effects of a positive tolerance in capacitance, system and capacitor bank grounding, and additional current magnitude and heating due to harmonics.
4. The rated transient inrush current peak is the highest magnitude that the circuit breaker shall be required to close at any voltage up to the rated maximum voltage, and shall be as determined by the system and unmodified by the circuit breaker. The rated transient inrush current frequency is the natural frequency that the circuit breaker shall be required to close at 100 percent of its rated back-to-back shunt capacitor bank or cable switching current.

   For application at less than 100 percent of rating, the product of the inrush current peak and natural frequency shall not exceed the product of the rated transient current peak and the rated transient inrush current frequency. (This product defines a maximum rate of change of inrush current and a minimum inductance between the banks or cables.)
5. Table 2-2 only. The transient inrush current in circuit breakers applied in GIS substations has a very high equivalent frequency (up to the MXz range, depending on the bus length) with an initial peak current of several thousand amperes (depending on the surge impedance of the bus). For reference, see ANSI/IEEE C37.012, 4.8.4.1.2. Contact the manufacturer to determine the ability of the circuit breaker to withstand these inrush current stresses.

Copyright National Electrical Manufacturers Association
Provided by IHS under license with NEMA
No reproduction or networking permitted without license from IHS
Not for Resale

Table 2-2
PREFERRED RATINGS FOR OUTDOOR CIRCUIT BREAKERS 121 kV AND ABOVE INCLUDING CIRCUIT BREAKERS APPLIED IN GAS INSULATED SUBSTATIONS*

Rated Maximum Voltage (1)(13)* kV, rms	Rated Voltage Range Factor K (2)	Rated Continuous Current at 60 Hz (3) Amperes, rms	Rated Short-Circuit Current* (at Rated Max. kV) (4)(5)(6)(17) kA, rms	Transient Recovery Voltage (14)(15)			Rated Interrupting Time (7) Cycles	Rated Maximum Voltage Divided by K kV, rms	Maximum Symmetrical Interrupting Capability and Rated Short Time Current (4)(5)(8) kA, rms	Closing and Latching Capability 2.7K times Rated Short-Circuit Current (4) kA, Crest
				Rated Time to Point P $T_2\mu$ sec	Rated Rate R kV/μ sec	Rated Delay Time $T_1\mu$ sec				

TABLE VALUES UNDER DEVELOPMENT

*For notes to Tables 2-2, see Table 2-1.

Suggested Standard for Future Design 3-5-1990.

Table 2-2A
PREFERRED CAPACITANCE CURRENT SWITCHING RATINGS FOR OUTDOOR CIRCUIT BREAKERS 121 kV AND ABOVE, INCLUDING CIRCUIT BREAKERS APPLIED IN GAS INSULATED SUBSTATIONS

Rated Maximum Voltage kV, rms	Rated Continuous Current(3) Amperes, rms	Rated Short-Circuit Current kA,rms	General-purpose Circuit Breakers		Definite-purpose Circuit Breakers Rated Capacitance Switching Current(2)			
			Rated Capacitance Switching Current (1)(2)*		Overhead Line Current Amperes, rms	Shunt Capacitor Bank or Cable		
			Overhead Line Current Amperes, rms	Shunt Capacitor Bank or Cable Isolated Current(3) Amperes, rms		Isolated Current(3) Amperes, rms	Back-to-Back	
							Current(3) Amperes, rms	Inrush Current (4)(5)
								Peak Current kA / Frequency Hz

TABLE VALUES UNDER DEVELOPMENT

*For notes to Tables 2-2A, see Table 2-1A.

Suggested Standard For Future Design 3-5-1990.

Copyright National Electrical Manufacturers Association
Provided by IHS under license with NEMA
No reproduction or networking permitted without license from IHS
Not for Resale

Section 3
FUNCTIONAL COMPONENTS AND REQUIREMENTS

3.1 APPLICABLE AMERICAN NATIONAL STANDARDS

ANSI C37.06, C37.11, C37.12, C37.20.1, C37.20.2, and ANSI/IEEE 21 have been approved by NEMA and, with the following additions, constitute Section 3 of this publication.

NEMA Standard 3-5-1990.

3.2 SEISMIC WITHSTAND

These requirements do not apply to circuit breakers used in:

1. Class 1 equipment for nuclear power generating stations.
2. Gas insulated substations.
3. Metal-enclosed equipment.

3.2.1 General-purpose Circuit Breakers (0.2g Static)

A general-purpose circuit breaker is designed to withstand a wind load of 90 miles per hour or a horizontal static force equivalent to 0.2g imposed upon its structure in addition to rated line pull and short-circuit forces. Demonstration of the capability of the breaker to meet these design loads can be accomplished by calculations or by statically loading the breaker or its selected components.

3.2.2 Definite-purpose Circuit Breakers (0.5g Dynamic)

These circuit breakers may be installed in locations where seismic activity occurs frequently and where a seismic withstand capability above 0.2g static is desired. For these locations, the maximum dynamic response to seismic motion shall be determined.

The design response spectra illustrated in Figure 3-8 for a maximum horizontal foundation acceleration of 0.5g shall be used to calculate dynamic response. A vertical motion shall be considered to act simultaneously with, but at three-quarters of the amplitude of, the horizontal motion. The frequency range to be examined shall be from 0.1 to 25 Hz.

The design of the foundation shall take into consideration the maximum forces and overturning moments at the foundation attachment points as well as the maximum deflections of the circuit breaker relative to the foundation.

The dynamic analysis of the circuit breaker shall indicate its ability to perform its required function after a seismic disturbance as shown either by analysis or by test. Definition of procedures for qualification or test or analysis of equipment is beyond the scope of this section, which only defines a response spectra.

NEMA Standard 3-5-1990.

3.3 TANK-TYPE OUTDOOR OIL CIRCUIT BREAKERS

Tank-type oil circuit breakers shall have the following characteristics:

1. Operation mechanism (see 3.5);
2. Framework (for frame-mounted circuit breakers) high enough to permit the removal of tanks when the circuit breaker is in the closed position;
3. Bushings having characteristics in accordance with ANSI/IEEE 21 (except that dimensions given for bushings do not apply to distribution-class circuit breakers shown in C37.06). Capacitance tap connections shall be included in all bushings with an insulation class of 115 kV and above. Circuit breakers using interchangeable bushings having dimensions in accordance with ANSI/IEEE 21 shall have bushing access holes adequate in diameter to accommodate the maximum "P" dimensions listed for those bushings;
4. Insulating oil;
5. Oil level indicator;
6. Bushing-type current transformers of circuit breakers used with interchangeable bushings as listed in ANSI/IEEE 21 shall have an inside diameter adequate to accommodate the maximum "D" dimensions of the bushings;
7. Bushing current transformer conduit connections and leads to terminal blocks;
8. Position indicator;
9. Hold-down means;
10. Special tools (including maintenance closing device if required); and
11. Grounding facilities as listed in ANSI C37.12.

NEMA Standard 3-5-1990.

3.4 OUTDOOR CIRCUIT BREAKERS

Outdoor circuit breakers shall have the following characteristics:

1. Operating mechanism (see 3.6);
2. Weatherproof system of insulation and termination for the interrupters, including a coordinated mechanism with means for isolating the high voltage components from the control portions;
3. Conduit or protected wireway leading the current transformer secondary leads to terminal blocks;
4. Position indicator;
5. Hold-down means; and

Copyright National Electrical Manufacturers Association
Provided by IHS under license with NEMA
No reproduction or networking permitted without license from IHS
Not for Resale

6. Grounding facilities as listed in ANSI C37.12.

NEMA Standard 3-5-1990.

3.5 OPERATING MECHANISMS FOR OUTDOOR CIRCUIT BREAKERS

3.5.1 All Operating Mechanisms

The types of operating mechanisms used differ in the means used for obtaining the power required to close a circuit breaker. The following general features apply to all types.

The mechanism shall be trip-free, and its electrical control shall meet the requirements of ANSI C37.11.

The control voltages and their ranges for closing and tripping shall be in accordance with ANSI C37.06 and shall apply to all electrically operated devices involved in the operation of the mechanisms. Specified operating times are obtained with rated control voltage on the devices.

The operating mechanism shall be mounted and enclosed in weatherproof housing with doors so arranged as to make accessible parts of the mechanism usually requiring inspection or maintenance. Each housing shall have a removable conduit plate or sufficient conduit knockouts for bringing in conduit.

Each mechanism shall have auxiliary switches as required.

The wiring for all control devices shall be included and shall terminate on readily accessible terminal blocks adjacent to incoming conduit.

To reduce condensation, each housing shall have a continuously operating heater, 120 or 240 volts alternating current.

Each mechanism shall have an operation counter.

For purposes of inspection and adjustment, means shall be provided for manual closing of the circuit breaker at a conveniently accessible place. The maintenance closing device shall be such that the contacts can be operated slowly by one person to adjust the circuit breaker when it is not in service.

3.5.2 For Solenoid Mechanisms Only

The mechanism shall be suitable for a closing control and power supply voltage of 125 or 250 volts direct current or 240 volts alternating current and for a tripping supply voltage of 48, 125, or 250 volts direct current within the ranges given in Table 9 of ANSI C37.06.

The transient voltage due to the interruption of the closing coil current shall be limited to 1500 volt crest.

3.5.3 For Pneumatic Mechanisms Only

The mechanism shall be suitable for a closing control voltage of 125 or 250 volts direct current and for a tripping supply voltage of 125 or 250 volts direct current within the ranges given in Table 9 of ANSI C37.06.

The tank shall conform to the ASME "Boiler and Pressure Vessel Code, Section VIII." A manually operated valve shall provide for draining the air-condensed moisture and oil from the lowest point of the air system. The air tank shall be equipped with a safety relief valve set at approximately 20 percent above the normal operating pressure. Pressure switches shall: (1) give alarm indication when the pressure drops to a value approximately 10 percent above the minimum operating pressure of the mechanism and (2) prevent the mechanism from attempting a closing operation when the pressure is too low to complete the operation by opening up the closing control circuit. These features can be combined into one device.

3.5.4 For Motor-operated Spring-charged Mechanisms Only

The mechanism shall be suitable for one of the control voltages listed in Table 9 of ANSI C37.06.

Means shall be provided to prevent operating the mechanism when maintenance work is being done.

3.5.5 For Hydraulic Mechanisms Only

For hydraulic mechanisms only, the mechanism shall be so arranged that emergency manual charging and release of the spring is possible without electrical operation.

On stored-energy mechanisms, a position indicator shall indicate the state of energy in the storage device. The word "charged" in black print on a yellow background shall be used; "discharged" in black print on a white background shall be permitted to be used where applicable.

For hydraulic mechanisms only the mechanism shall be suitable for one of the control voltages listed in Table 9 of ANSI C37.06.

The hydraulic system shall be equipped with a safety relief valve set at approximately 20 percent above the normal hydraulic operating pressure.

An alarm pressure switch shall close when the hydraulic pressure drops to a value approximately 10 percent above the minimum operating pressure of the mechanism. A lockout pressure switch shall prevent the mechanism from attempting a closing operation when the hydraulic pressure is too low to complete the operation. (These functions shall be permitted to be combined into one device.)

One manually operated valve shall provide for closing the circuit breaker hydraulically from the mechanism housing.

NEMA Standard 3-5-1990.

3.6 THREAD DIMENSIONS FOR TERMINAL STUDS

The thread dimensions for terminal studs for circuit breakers shall be in accordance with Table 3-1.

NEMA Standard 3-5-1990.

Copyright National Electrical Manufacturers Association
Provided by IHS under license with NEMA
No reproduction or networking permitted without license from IHS
Not for Resale

Table 3-1
THREAD DIMENSIONS FOR TERMINAL STUDS

Stud Diameter, Inches (mm)	Number of Threads per Inch	Thread Class	Minimum Length	
			Length of Stud, Inches (mm)	Usable Thread, Inches (mm)
¾ (19.05)	16	UNF-2A	2 (50.8)	1½ (38.1)
1⅛ (28.575)	12	UNF-2A	2½ (63.5)	2⅛ (53.975)
1¼ (31.75)	12	UNF-2A	2½ (63.5)	2⅛ (53.975)
1½ (38.1)	12	UNF-2A	2½ (63.5)	2⅛ (53.975)
1¾ (44.45)	12	UNF-2A	2½ (63.5)	2⅛ (53.975)
2 (50.8)	12	UN-2A	3 (76.2)	2½ (63.5)
2½ (63.5)	12	UN-2A	3 (76.2)	2½ (63.5)

3.7 INSTRUMENT CURRENT TRANSFORMERS

This standard is a supplement to ANSI C57.13 to cover those requirements peculiar to current transformers used on or with circuit breakers. It does not apply to indoor circuit breakers used in power switchgear assemblies in accordance with ANSI C37.20.1.

3.7.1 Ratings

The rating of a current transformer used for ac high-voltage circuit breakers shall include those terms used in ANSI C57.13 and the following additional terms:

a. Maximum voltage;
b. Dielectric strength; and
c. Thermal short-time current capability.

3.7.1.1 Ratings Applicable to All Types of Current Transformers

3.7.1.1.1 Continuous Thermal Current Capability

The continuous thermal current capability of a current transformer shall be equal to the rated continuous current of the circuit breaker with which it is used when connected on a ratio having a primary current rating equal to or greater than the continuous current rating of the circuit breaker.

NOTE—If connection is made on a lower ratio, the circuit breaker can carry a current equal to the primary current of that ratio without causing overheating of the current transformer. Furthermore, on the lower ratio the current transformer may have some additional thermal capability. The many variables in design of both circuit breakers and current transformers are too numerous to establish additional thermal capabilities in standards, and supplemental thermal current capabilities should be obtained from the manufacturer. (This note is approved as Authorized Engineering Information.)

3.7.1.1.2 Mechanical Short-time Current Capability

The mechanical short-time current capability of any tap of a single-ratio or multiratio current transformer shall be the lesser symmetrical current value of either; (1) 120 times the rated primary current of the tap under consideration or (2) the closing and latching capability of the circuit breaker as defined ANSI C37.06.

NOTE—Where item (1) is the lower value, the effects of the power system parameters, secondary burden, thermal short-time current capability, and such, should be considered in the application of current transformers. (This note is approved as Authorized Engineering Information.)

3.7.1.1.3 Thermal Short-time Current Capability

The thermal short-time current capability of any tap of a single-ratio or multiratio current transformer shall be the lesser symmetrical current value of either (1) 60 times the rated primary current of the tap under consideration for 1 second or (2) 42.5 times the rated primary current of the tap under consideration for 2 seconds or (3) the 3-second short-time current-carrying capability of the circuit breaker as defined in ANSI C37.06.

NEMA Standard 3-5-1990.

NOTE—Although circuit breakers have a 3-second short-time capability, this is a design requirement only. The 1- and 2-second capabilities are consistent with the circuit breaker ratings given in ANSI C37.06. Where item (1) or (2) results in the lower value, the effects of the power system parameters, secondary burden, mechanical short-time current capability, and such, should be considered in the application of current transformers. (This note is approved as Authorized Engineering Information.)

3.7.1.1.4 Accuracy Class Ratings

The accuracy class ratings of current transformers at standard burdens shall be as shown in Table 3-2.

3.7.1.1.5 Nameplates

Bushing-type current transformers shall have nameplates which meet the requirements of 7.4 in ANSI C37.04.

Current transformers shall have nameplates that contain the following data, as applicable. The requirements of ANSI C57.13 are included in these data.

1. Manufacturer's name;
2. Manufacturer's type designation;
3. Manufacturer's serial number;
4. Year of manufacture;
5. Rated frequency;
6. Rated maximum voltage;
7. Rated impulse withstand voltage;
8. Rated low-frequency withstand voltage;
9. Rated switching-impulse withstand voltage;
10. Rated primary current;
11. Rated secondary current;
12. Rated continuous-thermal-current factor;
13. Rated 3-second short-time current;
14. Rated mechanical short-time current;
15. Weight of complete current transformers;

Copyright National Electrical Manufacturers Association
Provided by IHS under license with NEMA
No reproduction or networking permitted without license from IHS

Not for Resale

16. Gallons of oil or weight of gas per current transformer;
17. Instruction book number; and
18. A connection diagram showing:
    a. The primary terminal markings;
    b. The position of each secondary core;
    c. The terminal designation of each core;
    d. The polarity markings of the primary and each core;
    e. The turns ratio between each terminal;
    f. The full winding ratio expressed, for example, as 3000/5 MR; and
    g. The accuracy class of each core and the ratio for which the accuracy is expressed.

NEMA Standard 3-5-1990.

3.7.1.1.6 Excitation Characteristics

The manufacturer should be consulted for typical excitation characteristics.

Authorized Engineering Information 3-5-1990.

3.7.1.2 Ratings for Bushing-type Current Transformers

The rated primary and secondary current ratings for multiratio bushing-type current transformers for relaying service shall be as shown in Table 3-3. The current ratings for single-ratio bushing-type current transformers for metering service shall be 300:5, 600:5, 800:5, 1200:5, 1500:5, 2000:5, and 3000:5.

NEMA Standard 3-5-1990.

3.7.1.3 Ratings for Free-standing Current Transformers

3.7.1.3.1 Rated Dielectric Strength

Insulation classes and dielectric tests shall be as shown in ANSI C57.13.

NOTE—If these current transformers are to be installed with circuit breakers, the manufacturer should be consulted because the dielectric tests and test procedures are different from those required for circuit breakers. (This note is approved as Authorized Engineering Information.)

Wet dielectric voltage tests and creepage distances for porcelain terminals shall be as shown in ANSI C57.13.

Table 3-2
ACCURACY CLASS RATINGS OF CURRENT TRANSFORMERS FOR OUTDOOR CIRCUIT BREAKERS

Breaker Ratings		Accuracy Class Ratings (1)			
		Relaying Service		Metering Service	
Maximum Voltages, kV, rms	Continuous Current 60 Hz, Amperes, rms	Multiratio Current Transformers (2)	Accuracy Voltages, Class (3)	Single-ratio Current Transformers (4)	Accuracy Class (5)
8.25 through 48.3	600	600:5	100	300:5	0.6B–0.5
	800	1200:5	200	600:5	0.6B–0.5
	1200	2000:5, 3000:5	400	800:5	0.6B–0.5
	2000	4000:5, 5000:5	800	1200:5	0.3B–0.5
	3000			1500:5	0.3B–0.5
	4000			2000:5	0.3B–0.5
	5000			3000:5	0.3B–0.5
72.5	1200	1200:5	400		
	2000	2000:5, 3000:5	800		
121 and above	1200	1200:5, 2000:5	800		
	1600	3000:5, 4000:5			
	2000	5000:5			
	3000				
	4000				

1. These values apply only when current transformers are used on 60 Hz circuits.
2. These current transformers normally have a primary current rating that corresponds to the continuous current rating of the circuit breaker, except that circuit breakers rated 800 and 1600 amperes use current transformers rated 1200 and 2000 amperes, respectively.
3. These secondary terminal voltage values for C or T classifications apply to the full winding as specified in ANSI C57.13 for 10 percent error.
4. Minimum ratios shall be not less than 50 percent of the continuous current rating of the circuit breaker.
5. These values apply only to those secondary windings specified for metering service.

Copyright National Electrical Manufacturers Association
Provided by IHS under license with NEMA
No reproduction or networking permitted without license from IHS
Not for Resale

Switching-impulse withstand voltage tests for voltage ratings of 362 kV and above shall be as shown in ANSI C37.06.

3.7.1.3.2 Rated Primary and Secondary Current

The maximum rated primary current of a wound-type current transformer shall be at least equal to the rated continuous current and the load current carrying capability of the circuit breaker with which the current transformer is to be used. Current ratings for multiratio wound-type current transformers for relaying service shall be as shown in Table 3-3. The current ratings for single-ratio current transformers for metering service shall be 300:5, 600:5, 800:5, 1200:5, 1500:5, 2000:5, and 3000:5.

NEMA Standard 3-5-1990.

3.7.2 Characteristics

3.7.2.1 Polarity and Lead Marking

Polarity and lead marking shall be as shown in ANSI C57.13 and in accordance with the following additional requirements.

3.7.2.1.1 Bushing-type Current Transformers

Polarity and lead marking for bushing-type current transformers shall be as shown in Figures 3-1 and 3-2. The two leads for single-ratio current transformers such as those used for metering service shall be marked X1 and X2.

3.7.2.1.2 Free-Standing Current Transformers

Polarity and lead markings for multiratio and single-ratio secondaries for current transformers shall be as shown in Figure 3-3. Single-ratio secondaries with two leads shall be marked with suitable prefix letters and suffix numbers. A fourth secondary with a single-ratio secondary for metering service shall use secondary terminal markings W1 and W2. If this fourth secondary is a multiratio secondary for relaying service, it shall use secondary terminal markings W1, W2, W3, and such.

As shown in Figure 3-3, H1 shall be the marked primary terminal. This terminal shall be electrically and mechanically connected to the upper structure of the current transformer. The H2 terminal shall be electrically insulated from the upper structure and from H1, and shall connect to the circuit breaker.

Table 3-3
RATINGS FOR MULTIRATIO CURRENT TRANSFORMERS FOR RELAYING SERVICE

Current Ratings, Amperes	Turns Ratios	Secondary Taps	Current Ratings, Amperes	Turns Ratios	Secondary Taps
	600:5			3000:5	
50:5	10:1	X2–X3	300:5	60:1	X3–X4
100:5	20:1	X1–X2	500:5	100:1	X4–X5
150:5	30:1	X1–X3	800:5	160:1	X3–X5
200:5	40:1	X4–X5	1000:5	200:1	X1–X2
250:5	50:1	X3–X4	1200:5	240:1	X2–X3
300:5	60:1	X2–X4	1500:5	300:1	X2–X4
400:5	80:1	X1–X4	2000:5	400:1	X2–X5
450:5	90:1	X3–X5	2200:5	440:1	X1–X3
500:5	100:1	X2–X5	2500:5	500:1	X1–X4
600:5	120:1	X1–X5	3000:5	600:1	X1–X5
	1200:5			4000:5	
100:5	20:1	X2–X3	500:5	100:1	X1–X2
200:5	40:1	X1–X2	1000:5	200:1	X3–X4
300:5	60:1	X1–X3	1500:5	300:1	X2–X3
400:5	80:1	X4–X5	2000:5	400:1	X1–X3
500:5	100:1	X3–X4	2500:5	500:1	X2–X4
600:5	120:1	X2–X4	3000:5	600:1	X1–X4
800:5	160:1	X1–X4	3500:5	700:1	X2–X5
900:5	180:1	X3–X5	4000:5	800:1	X1–X5
1000:5	200:1	X2–X5			
1200:5	240:1	X1–X5			
	2000:5			5000:5	
300:5	60:1	X3–X4	500:5	100:1	X2–X3
400:5	80:1	X1–X2	1000:5	200:1	X4–X5
500:5	100:1	X4–X5	1500:5	300:1	X1–X2
800:5	160:1	X2–X3	2000:5	400:1	X3–X4
1100:5	220:1	X2–X4	2500:5	500:1	X2–X4
1200:5	240:1	X1–X3	3000:5	600:1	X3–X5
1500:5	300:1	X1–X4	3500:5	700:1	X2–X5
1600:5	320:1	X2–X5	4000:5	800:1	X1–X4
2000:5	400:1	X1–X5	5000:5	1000:1	X1–X5

Copyright National Electrical Manufacturers Association
Provided by IHS under license with NEMA
No reproduction or networking permitted without license from IHS

Not for Resale

3.7.2.2 SECONDARY LEADS AND TERMINATIONS

Secondary leads shall be brought out to accessible terminal boards with polarity, phase, and lead designations shown on suitable connection diagrams. Terminal boards shall be equipped with means for short circuiting individual secondaries. Where applicable, secondary leads shall be brought out through suitable oil- and gas-tight seals.

3.7.2.3 DIMENSIONS OF BUSHING-TYPE CURRENT TRANSFORMERS

Bushing-type current transformers for dead-tank oil circuit breakers used with interchangeable bushings listed in ANSI/IEEE 21 shall have an inside diameter adequate to accommodate the maximum "D" dimensions of the bushings.

3.7.2.4 PRIMARY TERMINAL CONNECTION MECHANICAL LOADING

The maximum mechanical loading which may be applied to the primary terminal connection of a current transformer shall equal that required for a circuit breaker terminal connection as shown in ANSI C37.06.

3.7.2.5 CONNECTION FOR SECONDARY BURDENS

Secondary burdens shall be connected to bushing-type current transformers as shown in Figures 3-4 through 3-7. Similar connections shall be made for the various secondaries of current transformers, except that all four secondaries shall be on the same side of the circuit breaker.

NEMA Standard 3-5-1990.

3.7.3 Test Procedures

The following design and production tests shall be made on instrument current transformers for use on or with circuit breakers.

3.7.3.1 DESIGN TESTS

The design test requirements and procedures shall be as specified in ANSI C57.13 and the following additional requirements.

3.7.3.1.1 When rated dielectric strength is not determined in accordance with ANSI C57.13, the test requirements and procedures specified in ANSI C37.09 shall be used.

3.7.3.1.2 Wet dielectric tests shall be made in accordance with ANSI C37.06. When the current transformer is part of the circuit breaker structure, the wet tests on the circuit breaker shall include the current transformer. When the current transformer is not part of the circuit breaker or when it can be set apart from the circuit breaker, the current transformer should be tested separately. (This sentence approved as Authorized Engineering Information.)

NEMA Standard 3-5-1990.

3.7.3.1.3 Dielectric tests shall be made in accordance with ANSI C37.09. Where current transformers are closely associated with the circuit breaker, that is, mounted on the breaker-supporting structure or on separate pedestals at the end of the pole units, the dielectric tests shall be made on the combined circuit breaker and current transformer unless it can be established otherwise that there is no reduction of insulation withstand strength because of the adjacent apparatus.

3.7.3.1.4 Switching surge withstand voltage tests shall be made in accordance with ANSI C37.06.

3.7.3.2 PRODUCTION TESTS

Accuracy tests on bushing-type current transformers shall be made in accordance with ANSI C57.13, but all other tests shall be made in accordance with ANSI C37.09.

Accuracy tests on free-standing current transformers shall be made in accordance with ANSI C57.13, but all other tests shall be made in accordance with C37.09.

Free-standing current transformers shall be considered as major insulation components of a circuit breaker and, therefore, shall be permitted to be tested separately to meet the low-frequency withstand voltage tests on major insulation components required by ANSI C37.09.

NEMA Standard 3-5-1990.

3.8 BUSHING POTENTIAL DEVICES FOR TANK-TYPE OUTDOOR OIL CIRCUIT BREAKERS

3.8.1 General

Tank-type outdoor oil circuit breakers rated 115 kV and higher shall have tapped bushings and mounting provisions suitable for connecting one bushing potential device to each high-voltage bushing.

NEMA Standard 3-5-1990.

3.8.2 Characteristics

3.8.2.1 The potential device network includes a potential transformer and suitable variable inductive and capacitive reactances that permit adjustment of the output voltage to be substantially in phase and proportional to the high-voltage line-to-ground voltage impressed on the high-voltage bushing to which the potential device is connected.

Authorized Engineering Information 3-5-1990.

Copyright National Electrical Manufacturers Association
Provided by IHS under license with NEMA
No reproduction or networking permitted without license from IHS
Not for Resale

3.8.2.2 The transformer protective gap shall be set at not less than twice the maximum continuous operating tap voltage of the potential device when operating at primary line-to-ground voltage, rated burden, and rated frequency.

3.8.2.3 The transformer grounding switch for use in adjustment and maintenance shall be so arranged that, when closed, the point of connection of the potential device network to the high-voltage bushing is effectively grounded, thus reducing the operating tap voltage to zero, without interrupting the high-voltage line operation.

NEMA Standard 3-5-1990.

The high-voltage bushing should not be continuously energized with the transformer grounding switch closed or with any potential device connections which will remove the voltage from the tapped portion of the bushing. Consult the manufacturer for details.

Authorized Engineering Information 3-5-1990.

3.8.2.4 The potential device shall have a tapped capacitor or other equivalent means in the secondary circuit to correct the power factor of the applied burden to a net power factor of unity on the potential device. The minimum values of power-factor correction to be provided shall be in accordance with Table 3-4, in steps not greater than 3.75 voltamperes.

3.8.2.5 The potential device shall have a lead-in cable consisting of an insulated conductor with equivalent fittings for connection between the voltage tap of the bushing and the potential device network.

NEMA Standard 3-5-1990.

3.8.3 Class and Ratings

3.8.3.1 Potential devices for use with high-voltage bushings rated 121 kV and above shall be Class A (in-phase) devices.

3.8.3.2 The ratings for bushing potential devices shall be in accordance with Table 3-4. These ratings and the performance characteristics given in 3.9.4 apply to potential devices used on systems operating at 60 Hz and at the rated primary line-to-ground voltages given in Table 3-4. The ratings and performance characteristics, when the potential devices are used on systems operating at other frequencies and voltages, shall be in accordance with 3.9.3.3 and 3.9.3.4.

3.8.3.3 When the operating voltage of the circuit on which the circuit breaker is specified for use is the next rated circuit voltage class lower than the usual rated circuit voltage corresponding to the voltage class of the high-voltage bushing, the rated burden, in watts, shall be 80 percent of the value specified in Table 3-4, and the design shall be such that accuracy will be maintained at rated secondary voltage as shown in 3.8.4. Where potential devices are required on systems having operating voltages below the above specified values, consult the manufacturer. (The preceding sentence is approved as Authorized Engineering Information.)

3.8.3.4 When the system frequency of the circuit on which the circuit breaker is specified for use is 50 Hz, the rated burden, in watts shall be 80 percent of the value specified in Table 3-4, and accuracy shall be maintained at rated secondary voltage as shown in 3.8.4. (When potential devices are required on systems having frequencies other than 60 or 50 Hz, the manufacturer should be consulted.) (The foregoing sentence is approved as Authorized Engineering Information.)

Table 3-4
RATED VOLTAGE CLASSES, RATED BURDENS, AND SECONDARY VOLTAGES FOR BUSHING POTENTIAL DEVICES

Nominal Voltage Class, rms*	Rated Maximum Voltage, kV*, rms	Rated Primary Line-to-ground Voltage, kV*, rms	Rated Burden Watts**	Rated Secondary Voltage, Volts	Minimum Power Factor Correction (Voltamperes Reactive)†
115	121	70	25	121 or 70	20
138	145	84	35	121 or 70	28
161	169	98	45	121 or 70	36
230‡	242	140	80	121 or 70	64
345	362	210	125	121 or 70	75

*See 3.8.3.1, 3.8.3.2, and 3.8.3.3.

†See 3.8.3.4.

‡This device shall be used with high-voltage bushings rated 230/196kV, and it shall have the same output and performance characteristics when energized at rated primary line-to-ground voltage of 119 kV.

**When the potential device has extra secondary voltage windings or taps, the rated burden represents the total of the simultaneous burdens of all windings or taps, or both. The rated burden for each winding or tap, or both, shall be as shown on the nameplate.

3.8.4 Performance Characteristics

The performance characteristics are given in terms of the voltage regulation and the burden regulation when the device operates at the ratings specified in 3.9.3.2, 3.9.3.3, and 3.8.3.4.

3.8.4.1 The voltage regulation shall be not greater than the following:

Copyright National Electrical Manufacturers Association
Provided by IHS under license with NEMA
No reproduction or networking permitted without license from IHS
Not for Resale

Variation in Primary Voltage*, Percent	Ratio, Percent (Plus or Minus)	Phase Angle, Degrees (Plus or Minus)
100	1	1
25	3	3
5	5	5

*When devices are initially adjusted within these limits at rated burden, their performance will be substantially within the same limits between 90 percent and 110 percent of rated primary voltage.

3.8.4.2 The burden regulation shall be not greater than the following:

Variation in Rated Burden†, Percent	Ratio Percent (Plus or Minus)	Phase Angle, Degrees (Plus or Minus)
100	1	1
50	6	4
5	12	8

†The device shall be initially adjusted within these limits at rated primary line-to-ground voltage.

3.8.5 Adjustment

The maximum range over which adjustment shall be required and the maximum steps of adjustment of the potential devices shall be in accordance with the following:

Maximum Range of Adjustment Required (Plus or Minus)		Maximum Steps of Adjustment	
Ratio, Percent	Phase Angle, Degrees	Ratio, Percent	Phase Angle, Degrees
5	5	1	1

3.9.6 Polarity

The relative instantaneous polarity of the primary and secondary terminals of potential devices shall be clearly indicated. Permanent markings shall be so made that they cannot be easily obliterated.

3.8.7 Nameplates

Potential devices shall be provided with nameplates that include the following minimum information:

1. Manufacturer's name or the equivalent;
2. Identification number;
3. Type and form designation or the equivalent;
4. Nominal voltage class;
5. Rated primary line-to-ground voltage;
6. Secondary voltage ratings;
7. Rated burden of each secondary voltage winding and total simultaneous burden;
8. Rated frequency;
9. Device class;
10. Instruction book number; and
11. Weight.

NEMA Standard 3-5-1990.

3.9 UNDERVOLTAGE TRIP DEVICE

The dropout voltage range of an undervoltage trip device shall be 30 to 60 percent of its voltage rating for both dc and ac applications.

An electrically-reset undervoltage trip device shall pick up, and a mechanically-reset undervoltage trip device shall seal in, at 85 percent or less of its rated voltage.

NEMA Standard 3-5-1990.

NOTE—An undervoltage trip is a device in which the coil is energized without an auxiliary switch. The armature may be released for tripping at any point in the closing stroke of the circuit breaker. (This note is approved as Authorized Engineering Information.)

3.10 SECONDARY AND CONTROL WIRING (SMALL WIRING)

Wire sizes for instrument current transformer secondary leads shall not be smaller than 14 AWG. Wire for instrument potential transformer secondary leads and for control wiring shall be electrically coordinated with the inherent current requirements and voltage drop limitations of the circuit, and mechanically coordinated and designed for its intended application in the circuit breaker. The wire ends shall be permanently fitted with pressure-type connectors before attaching to terminal studs. Splices, when required, shall be brazed or made by permanently fitted pressure-type connectors.

NEMA Standard 3-5-1990.

3.11 PRESSURIZED FIBERGLASS-REINFORCED-PLASTIC COMPONENTS

All fiberglass-reinforced-plastic gas storage bottles, receivers, and pressure vessels that neither electrically isolate nor separate high-voltage elements of 1000 volts or higher shall be designed to meet the requirements of the ASME "Boiler and Pressure Vessel Code," Section X, "Fiberglass-reinforced Plastic Pressure Vessels," and of any state and local codes that apply at the point of original installation.

All pressurized vessels, insulators, and tubes that consist of fiberglass-reinforced plastic material, which electrically isolate or separate high-voltage elements of 1000 volts or higher, that have an internal or external gas pressure exceeding 15 psig, and that have an inside diameter exceeding 6 inches shall be individually tested in accordance with 4.5.3 and 4.5.4. This does not apply to the arc interrupter elements that are normally pressurized momentarily by arcing action during interruption period only.

Each fiberglass-reinforced-plastic component covered by this standard shall be marked to show that it has been subjected to the production test procedure although this marking need not be visible in the final assembly.

NEMA Standard 3-5-1990.

Copyright National Electrical Manufacturers Association
Provided by IHS under license with NEMA
No reproduction or networking permitted without license from IHS
Not for Resale

3.12 PRESSURIZED SYSTEMS

Each gas system on a circuit breaker shall have an ASME approved safety or an over-pressure relief function set to blow at a pressure not exceeding the maximum allowable working pressure of the system. Such a valve shall be designed to prevent the pressure from rising more than 10 percent above the maximum allowable working pressure, except when the excess pressure is caused by exposure to fire or to other abnormal sources of heat.

When the gas system that includes pressurized fiberglass-reinforced-plastic components are subjected to substantial rates-of-rise of pressure caused by exposure to abnormal events or sources of heat for which the above safety or relief valve is not adequate, additional overpressure relief set at 20 percent above the maximum allowable working pressure shall be provided by one of the following or its equivalent:

1. Rupture diaphragm;
2. Large area relief piston; or
3. Spring clamped construction.

When a pressurized metal vessel of an interconnected system of metal and fiberglass-reinforced-plastic elements is provided with a device qualifying under the above, it shall be permissible to use this device to protect the interconnected system. Any fiberglass-reinforced-plastic vessel which is pressurized shall be protected by the overpressure relief device.

NEMA Standard 3-5-1990.

3.13 PREFERRED MOUNTING FLANGE DIMENSIONS OF BUSHINGS FOR USE IN OIL-FILLED APPARATUS

The following are preferred mounting flange dimensions for use in oil-filled apparatus.

Bolt Circle Diameter, Inches(cm)	Number of Holes	Bolt Hole Size, Inches*(mm)
6 (15.24)	4	7/8 (22.22)
7 1/4 (18.41)	4	7/8 (22.22)
8 1/4 (20.95)	4	7/8 (22.22)
9 1/4 (23.49)	6	7/8 (22.22)
10 1/4 (26.03)	6	7/8 (22.22)
11 1/4 (28.57)	6	7/8 (22.22)
12 1/4 (31.11)	6	7/8 (22.22)
13 1/4 (33.65)	6	1 1/4 (31.75)
14 1/4 (36.19)	6	1 1/4 (31.75)
15 1/4 (40.05)	8	1 1/4 (31.75)
18 1/2 (46.99)	12	1 1/4 (31.75)
21 (53.34)	12	1 1/4 (31.75)
23 (58.42)	12	1 1/4 (31.75)
25 (63.5)	12	1 1/4 (31.75)
28 (71.12)	12	1 1/4 (31.75)
32 (81.28)	16	1 1/4 (31.75)
36 (91.44)	16	1 1/4 (31.75)

*This dimension represents maximum design capability. Refer to Tables 7.1(a), 7.1(b), and 7.1(c) in ANSI/IEEE 21 for actual values for specific bushing designs or ratings, or both.

NEMA Standard 3-5-1990.

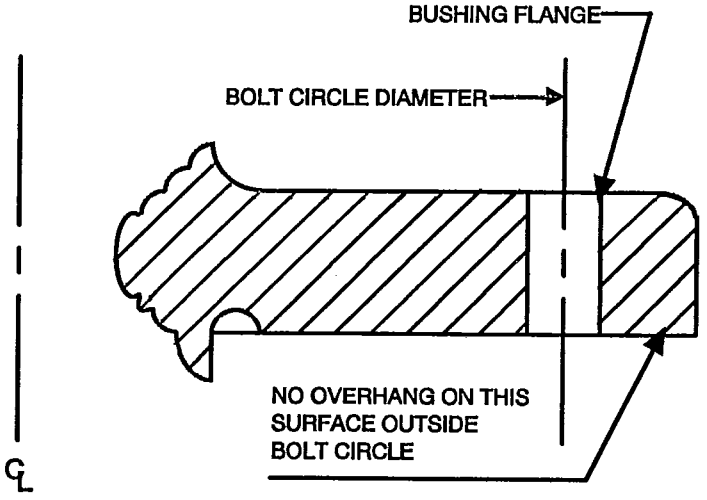

Copyright National Electrical Manufacturers Association
Provided by IHS under license with NEMA
No reproduction or networking permitted without license from IHS
Not for Resale

Copyright National Electrical Manufacturers Association
Provided by IHS under license with NEMA
No reproduction or networking permitted without license from IHS

3.14 DIMENSIONS OF OIL CIRCUIT BREAKER BUSHINGS

3.14.1 The following are dimensions of oil circuit breaker bushings, 200 through 350 kV BIL.

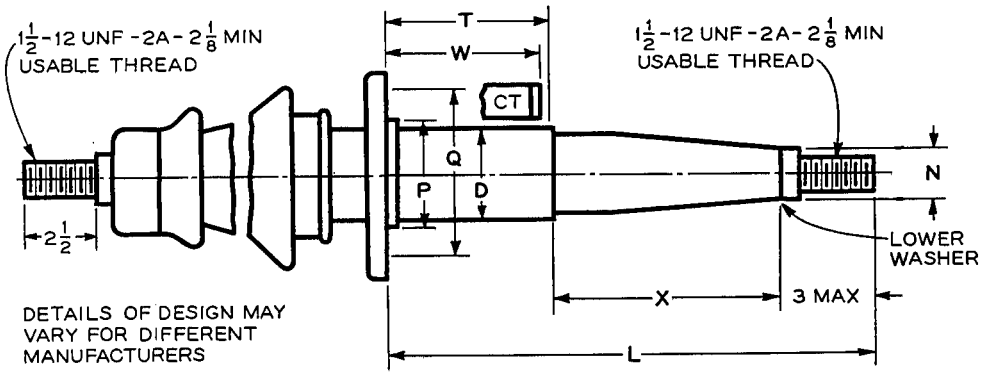

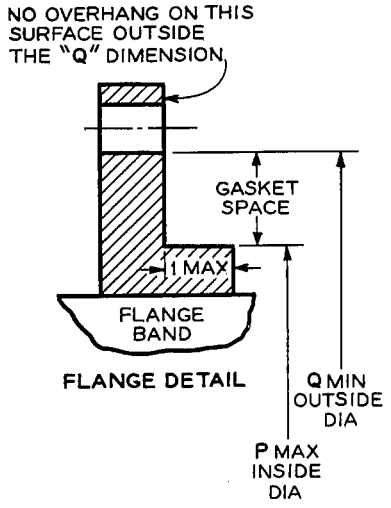

Line No.	Rating			Lower End					Flange				
									Gasket Space		Provision for Bolts		
	Rated Maximum Voltage, kV rms	Basic Impulse Level, kV Crest	Rated Continuous Current, Amperes	Length of Bushing From Flange Seat to Lower End ±⅛ (L)	Minimum Insulation Length (X)	Depth (W) of Current Transformer Pocket and Distance (T) From Bushing Gasket Surface to Minimum Oil Level (W and T)	Diameter From 1 Inch or 2.54 cm Below Flange to Lower End of Bushing Maximum (D)	Diameter of Lower Washer Maximum (N)	Maximum Inside Diameter (P)	Minimum Outside Diameter (Q)	Number	Bolt Hole Size	Bolt Circle Diameter
	Col. 1	Col. 2	Col. 3	Col. 4	Col. 5	Col. 6	Col. 7	Col. 8	Col. 9	Col. 10	Col. 11	Col. 12	Col. 13
1	38	200	1200	29½ (74.9)	9½ (24.1)	16½ (41.9)	3⅛ (7.9)	3⅛ (7.9)	4 (10.2)	6¼ (15.9)	4 (10.2)	⅞ (2.2)	7¼ (18.4)
2	48.3	250	1200	31½ (80.0)	11½ (29.2)	16½ (41.9)	3½ (8.9)	3½ (8.9)	4 (10.2)	6¼ (15.9)	4 (10.2)	⅞ (2.2)	7¼ (18.4)
3	72.5	350	1200	33½ (85.1)	13½ (34.3)	16½ (41.9)	4 (10.2)	4 (10.2)	5 (12.7)	7¼ (18.4)	4 (10.2)	⅞ (2.2)	8¼ (20.9)

Dimensions in inches with centimeter conversions in parentheses.

The oil gauge and power factor tap when supplied shall be in line and midway between two adjacent flange bolt holes.

Not for Resale

NEMA SG*4 90 ■ 6470247 0020474 3 ■

Copyright National Electrical Manufacturers Association
Provided by IHS under license with NEMA
No reproduction or networking permitted without license from IHS
Not for Resale

3.14.2 The following are dimensions of oil circuit breaker bushings 900 kV BIL:

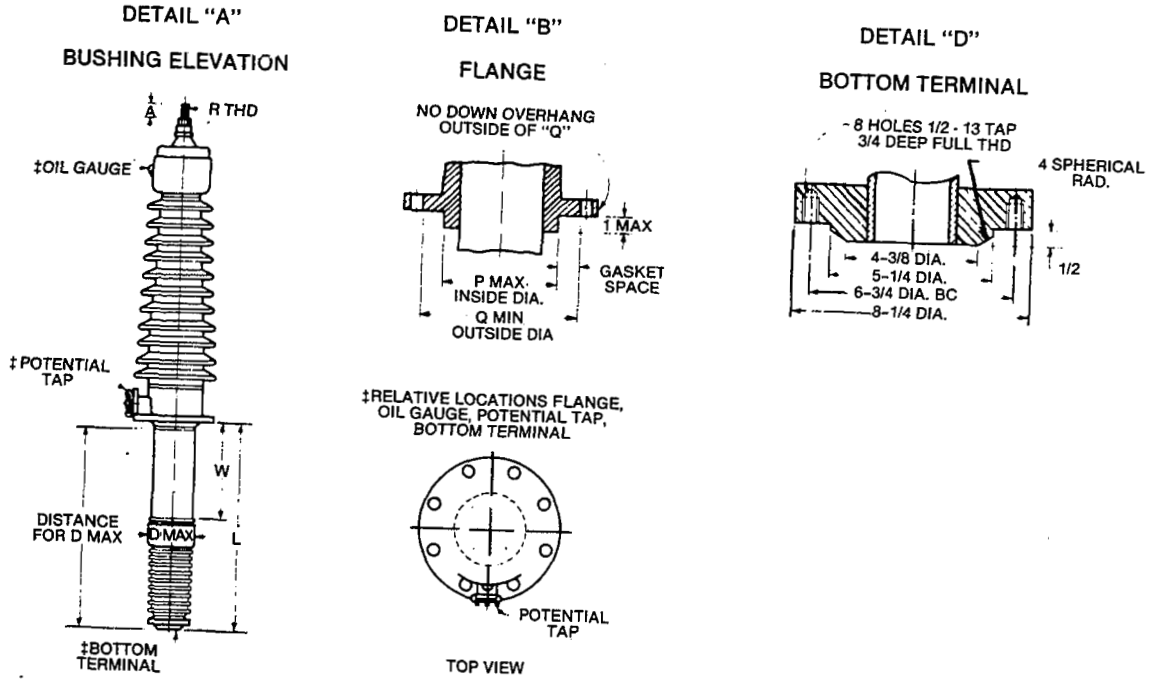

Line No.	Rating: Insulation Class (kV)	BIL (kV)	Rated Continuous Current (A) Breaker	Lower End: Length of Bushing from Flange Seat to Surface to Lower End ⅛ (L)	Lower End: Depth of Current Transformer Pocket and Distance from Bushing Gasket Minimum Oil Level (W)	Lower End: Maximum Diameter from 1 in. (2.54 cm) below Flange Lower End of Bushing (D)	Bottom End Terminal: Inside Diameter Tube Minimum	Bottom End Terminal: Detail D Fig. No.	Flange: Gasket Space: Inside Diameter Maximum (P)	Flange: Gasket Space: Outside Diameter Minimum (Q)	Flange: Provision for Bolts: No.	Flange: Provision for Bolts: Bolt Hole Size	Flange: Provision for Bolts: Bolt Circle Diameter	Top End Terminal: Usable Engagement Length Minimum (A)	Top End Terminal: Thread Class UNF-2A (R)
10	196*	900	1600	50¼ (127.6)	23 (58.4)	12 (30.5)	2 (5.1)	(3)	12⅜(31.4)	14⅜(36.5)	8	1¼ (3.2)	15¾ (40.0)	2 (5.1)	1½–12(3.8–30.5)
11	196*	900	2000	50¼ (127.6)	23 (58.4)	12 (30.5)	2 (5.1)	(3)	12⅜(31.4)	14⅜(36.5)	8	1¼ (3.2)	15¾ (40.0)	2⅓ (5.9)	2–12 (5.1–30.5)
12	196	900	3000	50¼ (127.6)	23 (58.4)	12 (30.5)	2 (5.1)	(3)	12⅜(31.4)	14⅜(36.5)	8	1¼ (3.2)	15¾ (40.0)	3 (7.6)	3–12 (7.6–30.5)

NOTE—Dimensions are given in inches with centimeter conversions in parentheses. These bushings are dimensionally interchangeable between circuit breakers and transformers. Dimensional interchangeability does not necessarily imply mechanical or electrical interchangeability on apparatus of different manufacturers. Not designed for use with draw lead. For draw lead application, the continuous current rating is limited to the current rating of the draw lead applied by the equipment manufacturer. When furnished, oil gauge and potential tap are in line midway between two adjacent flange bolt holes and between two adjacent bottom end tapped hole.

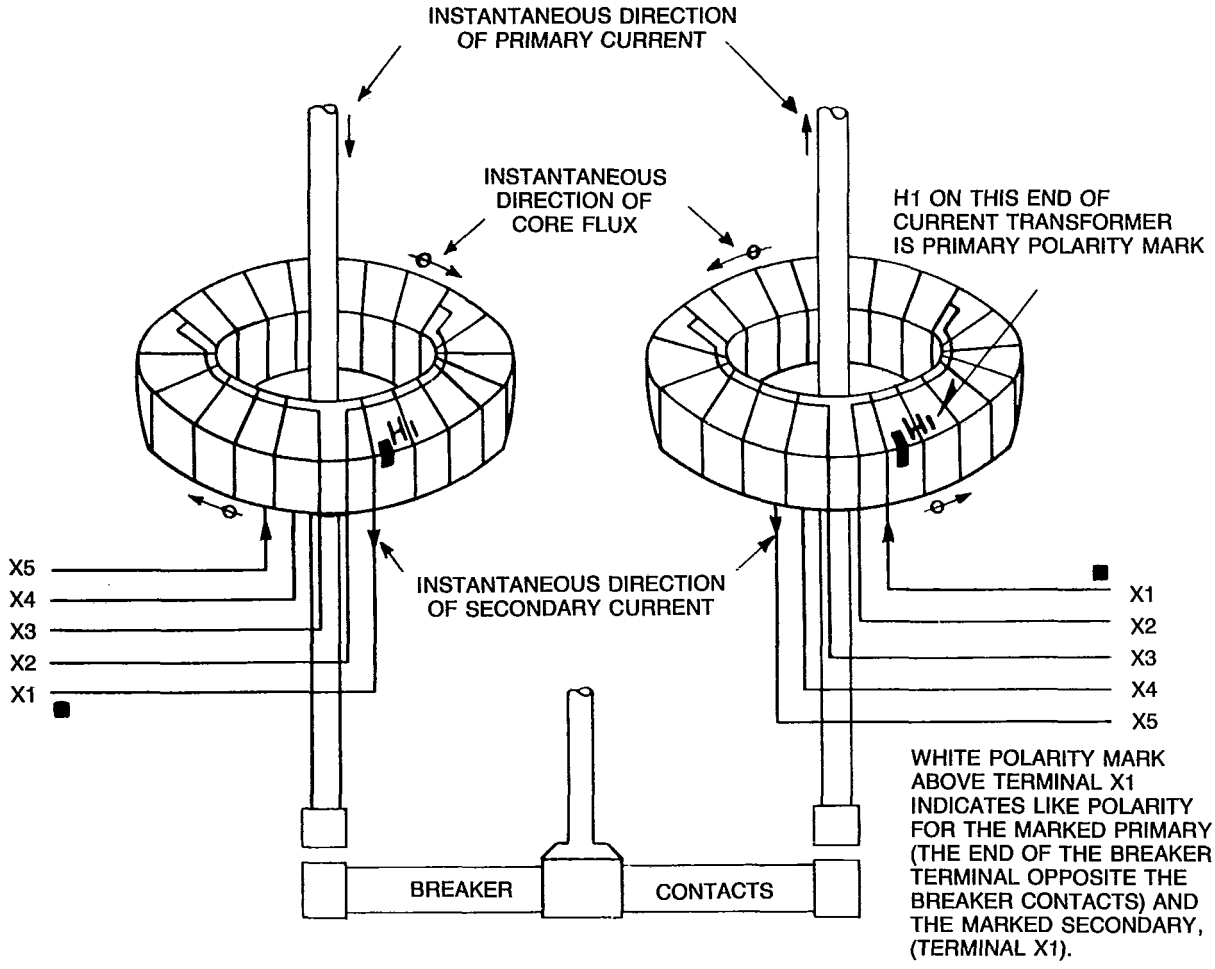

Figure 3-1
TYPICAL ARRANGEMENT OF TWO BUSHING-TYPE CURRENT TRANSFORMERS ON ONE POLE OF DEAD-TANK-TYPE CIRCUIT BREAKERS, SHOWING TAPS AND NUMBERING SYSTEMS ON CONNECTION BOARD. WHEN INTERMEDIATE TAPS ARE USED, THE TAP NUMERICALLY NEAREST X1 HAS THE SAME POLARITY AS X1.

Copyright National Electrical Manufacturers Association
Provided by IHS under license with NEMA
No reproduction or networking permitted without license from IHS
Not for Resale

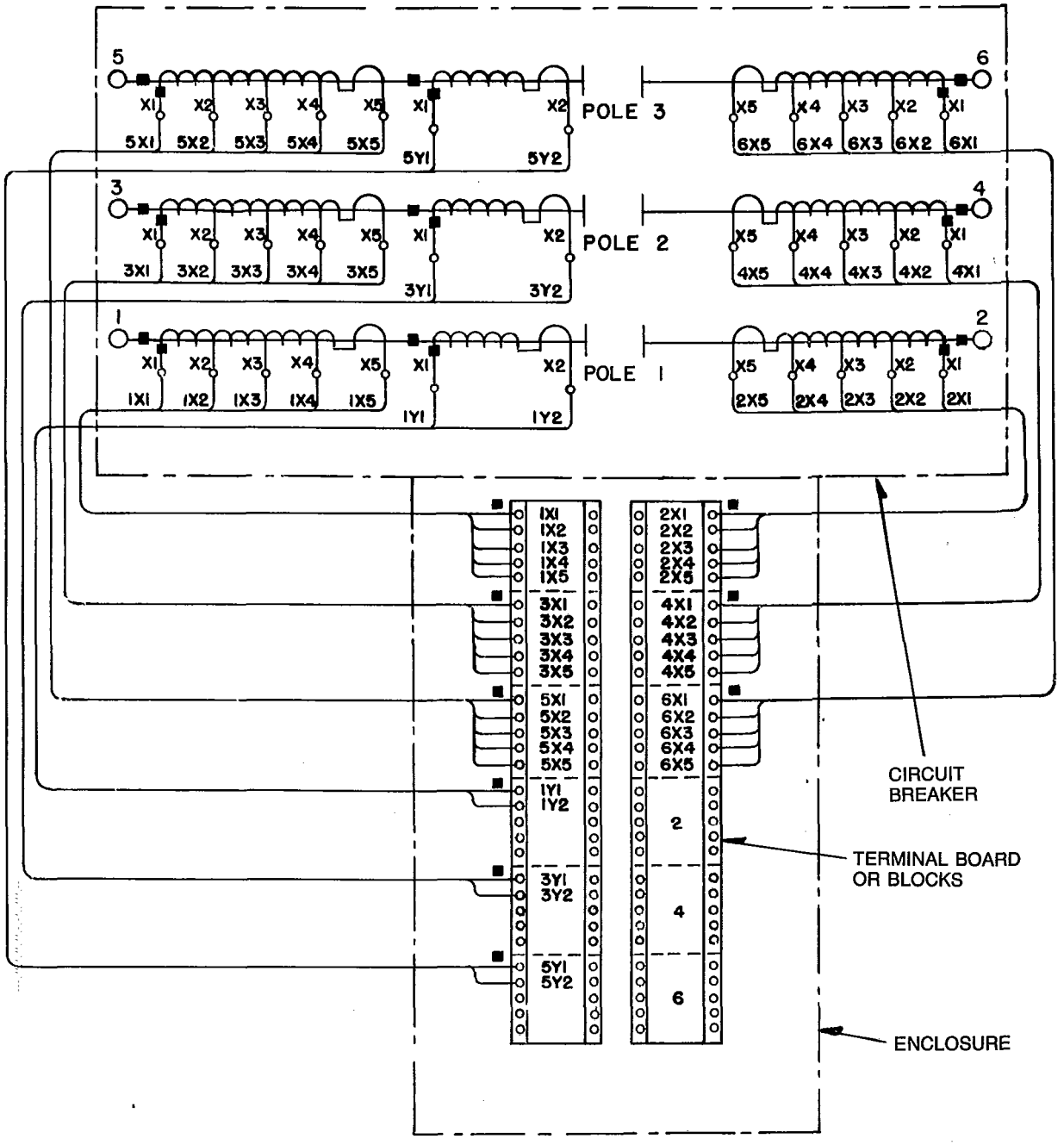

Exact location of current transformers, leads, polarity marks, and terminal blocks shall be determined from manufacturer's connection diagram or instructions.

When one current transformer per pole is used, current transformers are located on primary terminals 1-3-5 unless otherwise specified.

Figure 3-2
CURRENT TRANSFORMER AND LEAD IDENTIFICATION OF BUSHING-TYPE CURRENT TRANSFORMERS FOR DEAD-TANK-TYPE CIRCUIT BREAKERS

Copyright National Electrical Manufacturers Association
Provided by IHS under license with NEMA
No reproduction or networking permitted without license from IHS
Not for Resale

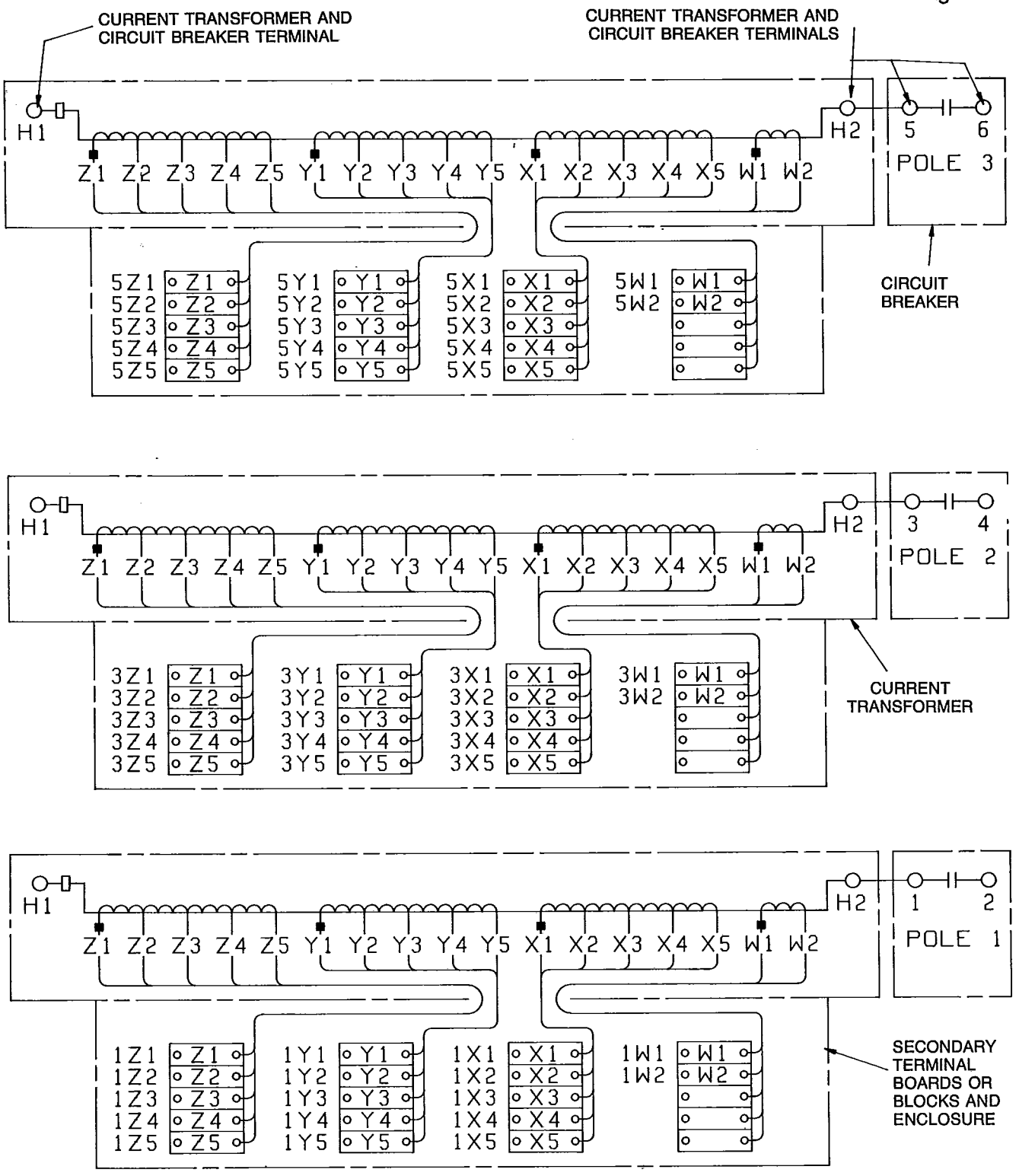

Exact location of current transformers, leads, polarity marks, and terminal blocks shall be determined from manufacturer's connection diagram or instructions.

Figure 3-3
CURRENT TRANSFORMER AND LEAD IDENTIFICATION OF CURRENT TRANSFORMERS FOR LIVE-TANK-TYPE CIRCUIT BREAKERS

Copyright National Electrical Manufacturers Association
Provided by IHS under license with NEMA
No reproduction or networking permitted without license from IHS
Not for Resale

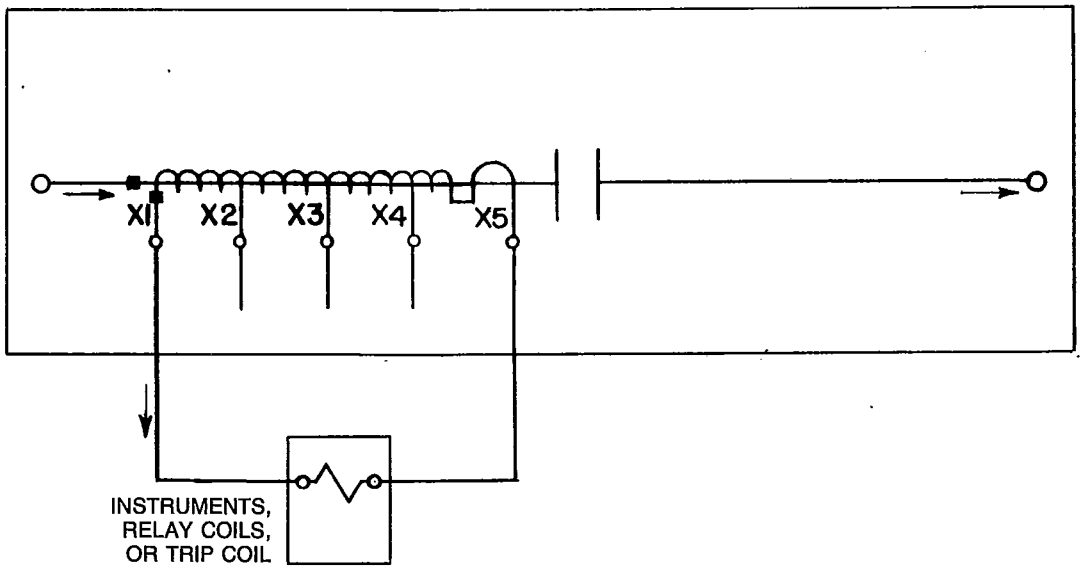

Figure 3-4
CONNECTION OF SECONDARY BURDENS ONE CURRENT TRANSFORMER PER BREAKER POLE

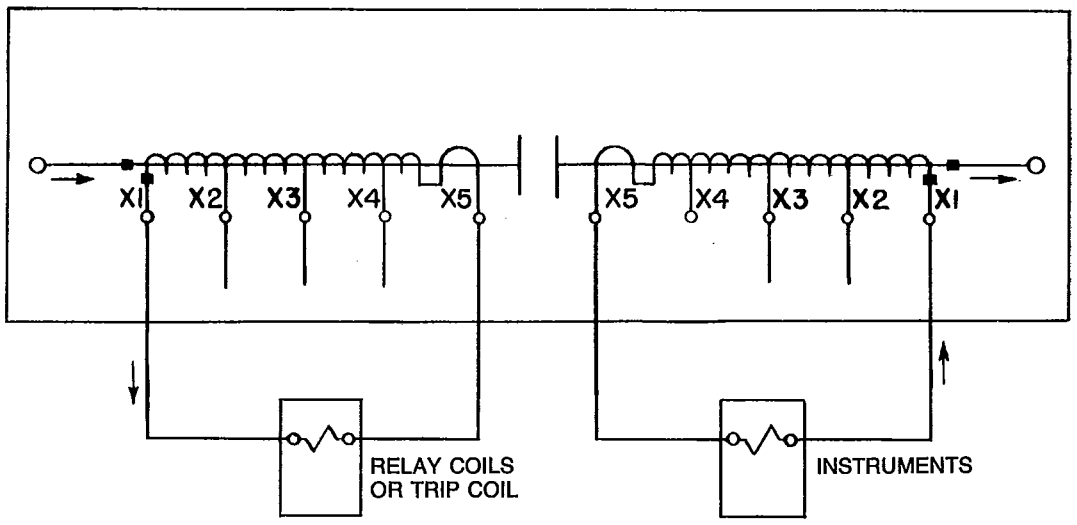

Figure 3-5
CONNECTION OF SECONDARY BURDENS TWO CURRENT TRANSFORMERS PER BREAKER POLE CONNECT INDEPENDENTLY

NOTE: It is recommended that instruments be operated on a separate current transformer. (Note approved as Authorized Engineering Information).

Copyright National Electrical Manufacturers Association
Provided by IHS under license with NEMA
No reproduction or networking permitted without license from IHS
Not for Resale

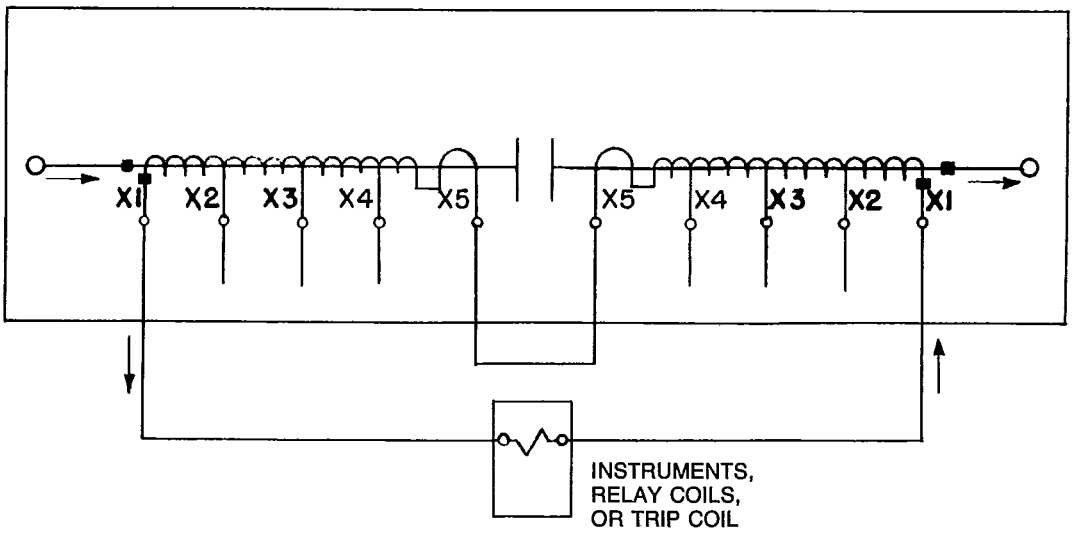

Figure 3-6
CONNECTION OF SECONDARY BURDENS TWO CURRENT TRANSFORMERS PER BREAKER POLE CONNECTION IN SERIES USED WHEN BURDENS ARE LARGE

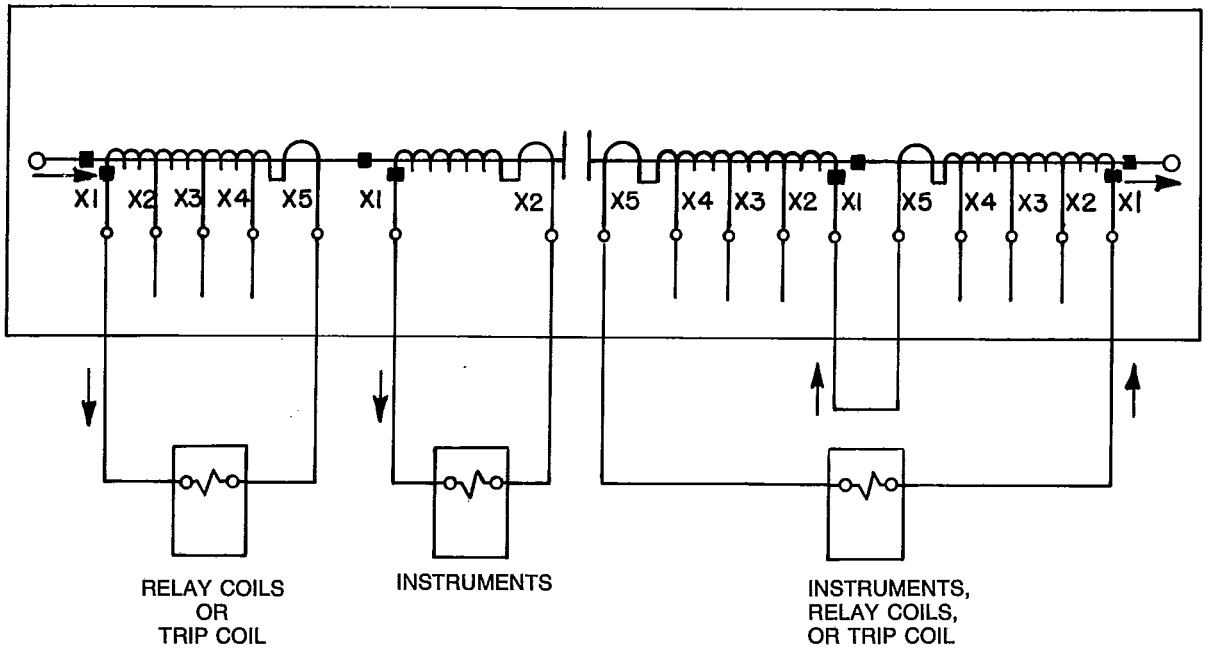

Figure 3-7
CONNECTION OF SECONDARY BURDENS FOUR CURRENT TRANSFORMERS PER BREAKER POLE TWO PER TERMINAL CONNECTED INDEPENDENTLY AND TWO PER TERMINAL CONNECTED IN SERIES

Copyright National Electrical Manufacturers Association
Provided by IHS under license with NEMA
No reproduction or networking permitted without license from IHS
Not for Resale

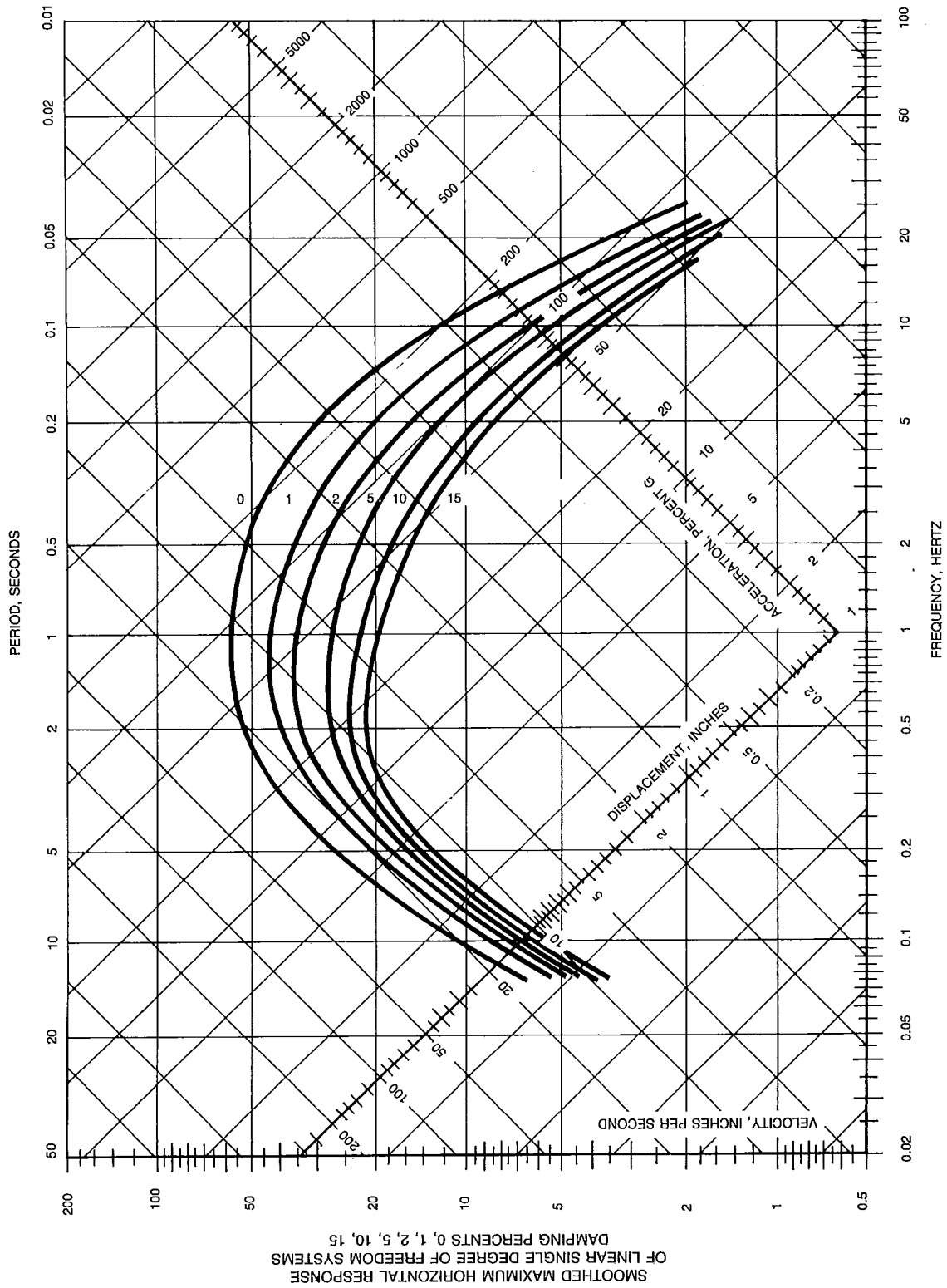

Figure 3-8
DESIGN RESPONSE SPECTRA FOR 0.5g MAXIMUM FOUNDATION ACCELERATION

Copyright National Electrical Manufacturers Association
Provided by IHS under license with NEMA
No reproduction or networking permitted without license from IHS
Not for Resale

Section 4
TESTING STANDARDS

4.1 APPLICABLE AMERICAN NATIONAL STANDARDS

ANSI C37.09 has been approved by NEMA and with the following additions, constitute Section 4 of this publication.

NEMA Standard 3-5-1990.

4.2 RADIO INFLUENCE VOLTAGE TESTS (DESIGN TEST)

4.2.1 The equipment and general method used in making radio influence voltage tests shall be in accordance with the recommendations given in NEMA Standards Publication 107.

4.2.2 Tests at one selected radio frequency shall be made with the circuit breaker both in the closed and open position.

4.2.3 In the case of multipole circuit breakers, one pole or terminal or groups of the same shall be permitted to be used at a time.

4.2.4 The tanks of the circuit breakers shall be filled with the prescribed amount or pressure of insulating fluid.

4.2.5 The case, tank, frame, and other normally grounded parts shall be connected to ground.

4.2.6 When a test is made with the circuit breaker in the open position, the pole or group of poles not under the test shall be grounded and ungrounded, and the radio influence voltage determined for each condition.

4.2.7 No other grounded or ungrounded object or structure (except mounting structure when required) shall be nearer any part of the circuit breaker or its terminals under test than three times the longest overall dimension of the test piece, with a minimum allowable spacing of 3 feet.

NEMA Standard 3-5-1990.

4.2.8 Where space requirements under test conditions do not permit the foregoing clearances to be maintained, the test will be considered satisfactory if the limits of radio influence voltage obtained are equal to or less than those specified in Table 4-1. In such cases a record should be made of the object, structures, and such, and their distances from the device under test.

Authorized Engineering Information 3-5-1990.

Table 4-1
LIMITS OF RADIO INFLUENCE VOLTAGE

Circuit Breaker Rated Maximum Voltage, kV	Test Voltage, kV	Limit of Radio Influence Voltage, Microvolts at 1000 KHz
15.5	9.41	500
25.8	15.7	650
38.0	23.0	650
48.3	29.3	1250
72.5	44.0	1250
121	73.4	2500
145	88.0	2500
169	102.5	2500
242	147.0	2500
362	219	2500
550	335	2500
800	485	2500

1. Measurements shall be made with circuit breaker in the non-current-carrying or nonoperating condition.
2. In the case of circuit breakers having voltage ratings not covered by this table, the test voltage shall be 5 percent above the line-to-neutral voltage corresponding to the maximum voltage of Range B as given in Table 1 of ANSI C84.1.
3. Circuit breakers having two voltage ratings shall be tested at the higher voltage rating.

4.2.9 Tests may be made under the conditions prevailing at the time and place of test. However, it is recommended that tests be avoided when the radio influence voltage of test equipment (including the influence voltage of irrelevant electrical devices) with the circuit breaker under test disconnected from the test equipment exceeds 25 percent of the radio influence voltage of the circuit breaker to be tested.

Authorized Engineering Information 3-5-1990.

4.2.10 The frequency of the supply voltage shall be 60 Hz, plus or minus 5 percent.

4.2.11 Tests shall be conducted under the atmospheric conditions prevailing at the time and place of test.

NEMA Standard 3-5-1990.

It is recommended that tests be avoided when the vapor pressure is below 0.2 or exceeds 0.6 inches of mercury. Since the effects of humidity and air density upon radio influence voltage are not definitely known,

Copyright National Electrical Manufacturers Association
Provided by IHS under license with NEMA
No reproduction or networking permitted without license from IHS
Not for Resale

no correction factors are recommended for either at the present time. However, it is recommended that barometric pressure and dry -and wet-bulb thermometer readings be recorded so that, if suitable correction factors should be determined, they can be applied to previous measurements.

Authorized Engineering Information 3-5-1990.

4.2.12 It shall be permissible to connect conductors of the largest size intended for use with the test piece to each terminal. The length of the conductors, when used, shall be equal to or greater than the longest overall dimension of the test piece, except that the length need not exceed 6 feet. The free end of such conductor shall terminate in a sphere having a diameter of twice the diameter of the conductor plus or minus 10 percent or shall be shielded in some other suitable manner to eliminate the effect of the end of the conductor as a source of radio influence voltage.

4.2.13 The test shall be made without removing any component part, and the test voltage shall be determined by the lowest rated voltage of any component part. The limiting radio influence voltage shall be identical with the highest value fixed for any of the component parts that determine the test voltage.

4.2.14 The following precautions shall be observed when making radio influence tests:

4.2.14.1 The circuit breaker shall be at approximately the same temperature as the room in which the test is made.

4.2.14.2 The circuit breaker shall be dry and clean.

4.2.14.3 The circuit breaker shall not be subjected to dielectric tests within 2 hours prior to the radio influence voltage test.

NEMA Standard 3-5-1990.

4.2.14.4 If the radio influence voltage falls off rapidly after the 60-Hz voltage has been applied for a short time, the circuit breaker may be pre-excited at normal operating voltage for a period not exceeding 5 minutes before proceeding with the tests.

Authorized Engineering Information 3-5-1990.

4.3 BUSHING POTENTIAL DEVICE TEST (PRODUCTION TEST)

Bushing potential devices shall be given both a dielectric and electrical test.

The dielectric tests shall consist of the following low-frequency 1-minute tests.

The primary windings of the potential device network transformer, lead-in cable, the shunt or auxiliary capacitor (when used), and other equipment in the tap circuit, exclusive of the protective gap, shall be given a low-frequency test having a value of four times the maximum operating tap voltage at rated voltage, burden and frequency.

The protective gap shall withstand a 60-Hz flashover test within the limits of its setting as specified in 3.7.2.2.

The power-factor-correction capacitor, phase angle capacitor (if used), and other equipment in the secondary circuit of the potential device network shall be given a low-frequency test having a value of four times the maximum operating voltage impressed between terminals on the respective component parts when the potential device is operated at rated voltage, burden, and frequency. The secondary circuits and associated windings shall also be given a low-frequency test of 2500 volts between the terminals on the adjusting panel and ground.

The electrical tests shall consist of the necessary electrical measurements on the potential device network or its component parts to insure proper operation of the potential device. Measurements of the electrical constants of the component parts of the potential network, such as resistances, inductive and capacitive reactances, turn ratios, and tap locations shall be made at the adjusting panel, insofar as practical, to insure that the parts are correctly connected in accordance with the connection diagram.

NEMA Standard 3-5-1990.

4.4 NONPRESSURIZED PORCELAIN COMPONENTS (DESIGN TEST)

A representative item of each design of nonpressurized porcelain elements utilizing end flanges, which are subjected to cantilever or tensile stress in a circuit breaker application, shall withstand for 5 minutes a test stress equivalent to 2.0 times the most probable stress imposed upon it by the sum of rated line pull plus short-circuit forces within the circuit breaker length. The porcelain elements shall also withstand for 5 minutes a total test stress equivalent to 1.5 times the design stress calculated from 4.4.1 and 4.4.2, unless this total stress is less than that calculated in the preceeding sentence.

4.4.1 General-purpose Circuit Breakers (0.2g Static)

These circuit breakers shall be designed to withstand a 90-mile-per-hour wind or a 0.2g static seismic load. The design stress calculation shall be based on the greater of: (1) the sum of rated line pull plus short-circuit forces within the circuit breaker plus a 90-mile-per-hour wind or (2) the sum of a rated line pull plus

Copyright National Electrical Manufacturers Association
Provided by IHS under license with NEMA
No reproduction or networking permitted without license from IHS
Not for Resale

Table 4-2
SOUND LEVEL LIMITS

Equipment Classification, kV Range	Impulse Noise Limit		Intermittent Noise Limit		Continuous Noise Limit	
	Maximum Sound Pressure Level dB*	Horizontal Distance to Measurement Point, Feet	Maximum Sound Pressure Level dB*	Horizontal Distance to Measurement Point, Feet	Maximum Sound Pressure Level dB*	Horizontal Distance to Measurement Point, Feet
1. General-purpose Outdoor Equipment						
362 and Below	140	3† 2‡	**	50†	90	50†
Above 362	140	3† 2‡	**	100†	90	100†
2. Definite-purpose Outdoor Equipment	(The following limits are in addition to those required for general-purpose equipment.)					
362 and Below	105	150†	90	150†	85	150†
	95	500†	80	500†	75	500†
Above 362	105	300†	90	300†	85	300†
	95	1000†	80	1000†	75	1000†

*The sound level limits are based on no-load operation since personnel are not expected to stand adjacent to the circuit breaker when it is opening under fault conditions. Measurements shall be made 5 feet above ground level.

†Measured from perimeter of circuit breaker with cabinet doors closed.

‡Meaured at location of the control switch of the circuit breaker with the cabinet doors open.

**See 4.6.5 for maximum allowable sound level.

NOTE: It is considered that the routine operation of the switching station will not submit a person to continuous or intermittent exposure unless he/she is at least at or within the specified minimum distance from the noise, depending on the circuit breaker voltage rating. (Note Approved as Authorized Engineering Information.)

short-circuit forces within the circuit breaker plus 0.2g static seismic loading.

4.4.2 Definite-purpose Circuit Breakers (0.5g Dynamic)

The design stress calculation shall be based on the sum of maximum seismic dynamic response plus rated line pull plus short-circuit forces within the circuit breaker. If the design stress calculated by this 4.4.2 is less than that calculated by 4.4.1, the greater value from 4.4.1 shall be used.

NEMA Standard 3-5-1990.

4.5 PRESSURIZED COMPONENTS

4.5.1 Pressurized Porcelain Components (Design Test)

A representative item of each design of potential insulators, porcelain tubes having an internal, or external, gas pressure exceeding 15 psig (with no limitation on size) shall withstand for 5 minutes 4.25 times the maximum allowable working pressure after all glazing, firing, and grinding operations are completed. When the porcelain element utilizes end flanges, the test pressure shall be applied on a complete assembly, using bolted end plates and loading the flanges in tension. If the porcelain element does not have end flanges and is used in an assembly that is held together by longitudinal compression (center clamping), the end plates shall be restrained by the test fixture and the porcelain element loaded only in hoop stress.

A representative item of each design of pressurized porcelain elements that are subjected to cantilever stress in a circuit breaker application, after all glazing, firing, grinding, and cementing operations are completed, shall withstand for 5 minutes a total test stress equivalent to the end load from maximum allowable working pressure plus a test cantilever stress equal to a multiple of the design cantilever stress as follows:

4.5.1.1 General-purpose Circuit Breakers (0.2g Static)

A multiple of three times the design cantilever stress shall be used. The design cantilever stress shall be based on the greater of:

1. The sum of rated line pull plus short-circuit forces within the circuit breaker plus a 90 mile-per-hour wind; or
2. The sum of rated line pull plus short-circuit forces within the circuit breaker plus 0.2g static seismic loading.

Copyright National Electrical Manufacturers Association
Provided by IHS under license with NEMA
No reproduction or networking permitted without license from IHS
Not for Resale

4.5.1.2 Definite-purpose Circuit Breakers (0.5g Dynamic)

A multiple of 1.5 times the design cantilever stress shall be used. The design cantilever stress shall be based on the sum of rated line pull plus short-circuit forces within the circuit breaker plus maximum seismic dynamic response. If the test cantilever stress calculated by this 4.5.1.2 is less than either of those calculated by 4.5.1.1, the greater value from 4.5.1.1 shall be used.

4.5.2 Pressurized Fiberglass-reinforced-plastic Components (Design Tests)

Components that neither electrically isolate nor separate high-voltage elements of 1000 volts or higher shall be tested in accordance with the requirements of the ASME "Boiler and Pressure Vessel Code," Section X, "Fiberglass-Reinforced Plastic Pressure Vessels" and of any state or local codes that apply at the point of original installation.

Components that electrically isolate or separate high-voltage elements of 1000 volts or higher shall be given design cyclic pressure and burst tests in accordance with 4.5.2.1, 4.5.2.2, or 4.5.2.3. These tests shall be made on a prototype of each design of fiberglass-reinforced-plastic vessel, insulator, or tube having an internal or external gas pressure exceeding 15 psig and having an inside diameter exceeding 6 inches (15.2 cm), after all coating, curing, and fabrication operations are completed. When the plastic element utilizes end flanges or fastenings loaded in tension or cantilever, cyclic and burst tests at 4.25 times the maximum allowable working pressure shall be applied on a complete assembly, using bolted end plates and loading the flanges or fastenings in tension or cantilever. If the plastic element does not have end flanges or fastenings loaded in tension or cantilever and is used in an assembly that is held together by longitudinal compression (center clamping), the end plates shall be restrained by the test fixture and the plastic element loaded only in hoop stress.

The maximum rated cantilever stress shall be based on the load on the plastic element resulting from: (1) combination of the short-circuit forces internally within the circuit breaker, plus the rated line pull, plus a 90 mile-per-hour wind or (2) the combination of the short-circuit forces internally within the circuit breaker, plus the rated line pull, plus 0.2g (static) earthquake shock, whichever is the more severe duty.

Cyclic and burst tests shall be carried out on a representative sample of each design element as follows:

4.5.2.1 Vessels Intended for Internal Pressure Only

At least one prototype vessel shall be subjected to a cyclic pressure test followed by a hydrostatic pressure burst test at the maximum working temperature but not less than 150°F (65.6°C). The pressure shall be cycled from atmospheric pressure to the maximum allowable working pressure and back 50,000 times; except that vessels with internal liners or external jackets, whether integral or not, shall be cycled for 5000 cycles at the minimum working temperature and for 45,000 cycles at the maximum working temperature.

The vessel shall then be burst, using an appropriate liquid, at the maximum working temperature but not less than 150°F (65.6°C), with the pressure applied at a uniform rate so that failure occurs in not less than 1 minute.

The minimum burst pressure shall be 4.25 times the pressure required to stress the plastic vessel to its maximum allowable working pressure plus the magnitude of any end loading or cantilever stress, or both, expected to occur under service conditions. The end loading or cantilever stress, or both, may be applied by means other than pressure. However, if the first vessel tested fails at not less than 90 percent of this value, the manufacturer may burst more vessels that have been subjected to cyclic pressure tests. The average burst pressure of these additional vessels, including that of the first vessel, shall be 4.25 times the design test pressure and no others shall burst below the value of the first vessel.

4.5.2.2 Vessels Intended for Both Internal and External Pressure

At least one prototype vessel intended for both internal and external pressure service shall be subjected to a cyclic pressure test in accordance with the requirements of 4.5.2.1, except that the pressure shall be cycled from the external maximum allowable working pressure to the internal maximum allowable working pressure and back 50,000 times. At the manufacturer's option, the cyclic pressure test may be carried out in two steps, as follows:

1. The pressure shall be cycled from the external maximum allowable working pressure to atmospheric pressure and back 50,000 times.
2. The pressure shall be cycled from the external maximum allowable working pressure to atmospheric pressure and back 50,000 times.

The prototype vessel, after being subjected to the external hydrostatic pressure test, shall then be subjected to an internal hydrostatic burst test in accordance with the requirements of 4.5.2.1.

Copyright National Electrical Manufacturers Association
Provided by IHS under license with NEMA
No reproduction or networking permitted without license from IHS
Not for Resale

4.5.2.3 VESSELS INTENDED FOR EXTERNAL PRESSURE SERVICE ONLY

At least one prototype vessel shall be subjected to a cyclic external pressure test followed by a buckling test at the maximum working temperature but not less than 150°F (65.6°C) with the external pressure applied to a uniform rate and having an internal pressure of 15 psig. The external pressure shall be cycled from atmospheric pressure to the maximum and back 50,000 times. The minimum buckling pressure shall be 4.25 times the pressure required to stress the plastic vessel to its maximum allowable working differential pressure plus the magnitude of any end loading or cantilever stress, or both, expected to occur under service conditions. The end loading or cantilever stress, or both, may be applied by means other than pressure. However, if the first vessel tested fails at not less than 90 percent of this value, the manufacturer may test additional vessels. The average rupture pressure of these additional vessels, including that of the first vessel, shall be 4.25 times the design test pressure and no others shall rupture below the value of the first level.

4.5.3 Pressurized Fiberglass-reinforced-plastic Components (Production Tests)

Components that neither electrically isolate nor separate high-voltage elements of 1000 volts or higher shall be tested in accordance with the requirements of the ASME "Boiler and Pressure Vessel Code," Section X, "Fiberglass-Reinforced Plastic Pressure Vessels" and of any state or local codes that apply at the point of original installation.

The manufacturer shall establish design and process procedures prior to production work on fiberglass reinforced plastic pressure vessels which electrically isolate or separate high-voltage elements of 1000 volts or higher to insure units of uniform characteristics.

All production vessels having an internal or external gas pressure exceeding 15 psig and having an inside diameter exceeding 6 inches (15.2 cm) shall individually withstand for 1 minute, without leaking, a hydrostatic pressure test at 1.5 times the maximum working pressure, or a pneumatic pressure test at 1.25 times the maximum working pressure, after all coating, curing, and fabrication operations are completed. No permanent distortion shall result from this pressure test. If the pneumatic test is made, it is recommended that the test pressure be lowered after 1 minute to a value equal to the maximum working pressure before examination for leakage is begun. (This sentence approved as Authorized Engineering Information.) When the plastic element utilizes end flanges or fastenings loading the element in tension or cantilever, the test pressure shall be applied on a complete assembly, using bolted end plates and loading the flanges or fastenings in tension. If the plastic element is used in an assembly that is held together by longitudinal compression (center clamping), the end plates shall be restrained by the test fixture and the plastic element loaded only in hoop stress.

At least one vessel of each design of 2000 duplicate production vessels shall be subjected to design cyclic and burst tests, but a minimum of one such vessel produced in three years shall be so tested.

The determination of the weight of resin and fiberglass shall be made on at least one of each 1000 duplicate production vessels, with a minimum of one test each year. The weight shall be not less than 90 percent of that tested in the cyclic and burst tests.

The under-thickness deviation in any area of a production vessel shall not exceed 10 percent of the vessel, or 10 percent of the average of the vessel, given cyclic and burst tests.

The weight of each production vessel shall be determined and shall be not less than 90 percent of that tested in the cyclic and burst tests.

4.5.4 Assembled Pressurized Fiberglass-reinforced-plastic Components (Production Tests)

If the circuit breaker is not completely assembled at the factory prior to shipment, each major assembly shall be tested in the factory by raising the pressure to the maximum allowable working pressure and holding it for 5 minutes.

These assembled component tests are not required if the circuit breaker is completely assembled at the factory and the pressure test described in 5.5 of ANSI C37.09 is made.

NEMA Standard 3-5-1990.

4.6 NOISE REQUIREMENTS

The purpose of this standard is to establish guidelines to provide protection against excessive environmental disturbance from outdoor switchyard circuit breakers. This standard does not apply to circuit breakers used in gas-insulated substations and metal-enclosed equipment.

4.6.1 Equipment Classification

4.6.1.2 GENERAL-PURPOSE EQUIPMENT

This type of equipment shall be designed to comply with the noise regulations of OSHA that set forth measurements and practices with regard to noise levels that are deemed acceptable in occupational environments without personal protective equipment to reduce the noise level.

Copyright National Electrical Manufacturers Association
Provided by IHS under license with NEMA
No reproduction or networking permitted without license from IHS
Not for Resale

4.6.1.2 DEFINITE-PURPOSE EQUIPMENT

This type of equipment shall be designed to meet lower noise levels than those of general-purpose equipment because of additional environmental factors concerned with noise disturbances. (See Table 4-2.)

4.6.2 Terminology and Definitions

All terms and definitions not modified by this standard shall be in accordance with the ANSI S1.1 and S1.13.

4.6.3 Noise Exposure Conditions

Noise exposure conditions cover the exposure under the following circumstances:

1. Personnel at, or very close to, the circuit breaker during installation, maintenance, or inspection periods.
2. Personnel at control stations.
3. Persons in the proximity of the equipment as permitted by limiting boundaries.

4.6.4 Noise Classification

4.6.4.1 IMPULSE NOISE

The noise produced by a closing, opening, or close-open operation of the circuit breaker is classified as impulse noise.

4.6.4.2 CONTINUOUS NOISE

The noise produced by vibrations, fans, blowers, and such, is classified as continuous noise.

4.6.4.3 INTERMITTENT NOISE

The noise produced by periodic operation (occurring one or more times per day or per week) of such devices as compressors or hydraulic pumps, compressor unloader exhausts, air regulator valves, air drains, and such, is classified as intermittent noise.

4.6.5 Noise Level

The noise level shall not exceed those given in Table 4-2 for the different equipment and noise classifications. Where intermittent noise recurs several times daily, with each noise level enduring for 1 second or as long as several hours per day, the accumulated intermittent noise shall be calculated as follows, using the permissible sound levels and times given in Table 4-3.

NEMA Standard 3-5-1990.

Table 4-3
PERMISSIBLE NOISE EXPOSURE

Duration per Day, Hours	Sound Level, dBA
8	90
6	92
4	95
3	97
2	100
1½	102
1	105
½	110
¼ or less	115

When the daily noise exposure is composed of two or more periods of exposure to different sound levels, their combined effect should be considered, rather than the individual effect of each. If the sum of the following fractions: $C1/T1 + C2/T2 \ldots Cn/Tn$ exceeds unity, then, the mixed exposure should be considered to exceed the limit value. Cn indicates the total time of exposure at a specified sound level, and Tn indicates the total time of exposure permitted at that level. If the period between repeating (intermittent) noise is less than 1 second, the noise is considered to be continuous. Exposure to impulsive or impact noise should not exceed 140 dB peak sound pressure level.

Authorized Engineering Information 3-5-1990.

4.6.6 Noise Measurement Equipment

Noise measurements shall be made with a sound-level meter meeting the requirements of ANSI S1.4. The reference pressure for all measurements shall be 0.0002 microbars. ANSI S1.13 shall apply unless otherwise modified by this standard. Impulse noise limits shall be specified as peak values without weighting. The peak sound pressure level shall be measured with a sound-level meter in combination with either an impact noise analyzer or an octaveband noise analyzer using the all pass range.

Continuous and intermittent noise measurements shall be made with a sound level meter giving an rms response, using the A scale and a "slow" meter speed.

Care shall be taken so that measurements will not be influenced by noise reflection, focus, or amplification from walls, buildings, or other surfaces.

4.6.7 Design Tests

Design tests to determine the levels of impulse, continuous, and intermittent noise shall be made under

Copyright National Electrical Manufacturers Association
Provided by IHS under license with NEMA
No reproduction or networking permitted without license from IHS
Not for Resale

no-load conditions on a completely assembled circuit breaker.

If a complete three-phase circuit breaker is not assembled at the place of manufacture, the tests shall be made at the installation site.

NEMA Standard 3-5-1990.

Factors over which the manufacturer does not have control should be considered when making noise measurements at installations. The tests should be carried out at maximum rated operating conditions and corresponding operating speeds. If the circuit breaker is operated for test purposes without its normal interrupting fluid, the design tests should be performed under this condition.

Authorized Engineering Information 3-5-1990.

Copyright National Electrical Manufacturers Association
Provided by IHS under license with NEMA
No reproduction or networking permitted without license from IHS
Not for Resale

Section 5
APPLICABLE STANDARDS

5.1 APPLICABLE AMERICAN NATIONAL STANDARDS

ANSI C37.010, approved by NEMA, and the following additions, constitute Section 5 of this publication.

NEMA Standard 3-5-1990.

5.2 CIRCUIT BREAKERS FOR AC MOTOR STARTING

The following information is provided for the application of circuit breaker to the control of motors.

Circuit breakers for ac motor starting and running service shall be applied so that their ratings as listed in ANSI C37.06 shall be adequate to meet the requirements as determined by location of the circuit breakers in the ac system and circuit. Figure 5-1 illustrates typical methods of ac motor starting.

NEMA Standard 3-5-1990.

In addition, the following specific provisions should be considered in connection with this application of circuit breakers in order to provide satisfactory service.

5.2.1 Voltage

The voltage rating of all circuit breakers, including the circuit breakers in the reduced voltage starting and neutral circuits as well as the line and running circuit breakers, should correspond to the voltage rating of the motor.

5.2.2 Continuous Current

The continuous-current rating of each circuit breaker should be not less than the full-load current of the motor except that, in the case of part winding started motors, it should be not less than the full-load current of that winding in which the circuit breaker is located.

Circuit breakers used during the starting period only, with autotransformer or reactor starting, may have a continuous rating not less than two-thirds of the current requirement of the main circuit breaker.

If the motor has a service factor so that it can carry some percentage of the rated load current, such as 15 percent above normal, continuously or has a short-time overload rating, such as 25 percent for 2 hours, then the continuous current rating of the circuit breaker should be not less than the value determined by the service factor or by the overload rating.

5.2.3 Short-time Current and Short-circuit Current

All circuit breakers, except neutral starting circuit breakers (designated as "N" in Figure 5-1) should meet the system short-time and short-circuit current requirements.

Since they have the reactance of the motor or autotransformer windings interposed between them and the ac system, the neutral starting circuit breakers (designated as "N" in Figure 5-1) used for neutral reactor, neutral part winding, wye-delta and autotransformer started motors, should meet the reduced short-time and short-circuit current requirements as determined by the sum of the interposing and system reactances.

5.2.4 Starting Current

The maximum amount of starting currents in rms symmetrical amperes that each electrically operated circuit breaker should be required to make at any time during the motor starting cycle should not exceed 30 percent of the short-circuit current rating of the circuit breaker at circuit voltage. The circuit breaker should not be required to carry this value of starting current for longer than 1 minute.

The above percentages should apply to circuit breakers with electrical operation of "quick make and break" manual operating mechanisms but, for circuit breakers with other types of manual operating mechanisms, the percentages should be reduced to 7½ percent.

The starting current values for the various methods of motor starting as shown in Figure 5-1 should be determined as follows:

Authorized Engineering Information 3-5-1990.

5.2.4.1 With full voltage starting (Figure 5-1.a), the starting current is equal to the locked rotor current at full voltage.

5.2.4.2 With wye-delta starting (Figure 5-1.m), the starting current is equal to 0.33 of the locked rotor current on the running (delta) connection.

5.2.4.3 With reactor starting (Figures 5-1.b, 5-1.c, and 5-1.d), the starting current is determined from the sum of the reactances of the starting reactor and of the motor under locked rotor conditions.

5.2.4.4 With part winding starting (Figures 5-1.i, 5-1.j, and 5-1.k), the starting current is determined from the reactance of the motor starting winding under locked rotor conditions.

Copyright National Electrical Manufacturers Association
Provided by IHS under license with NEMA
No reproduction or networking permitted without license from IHS

Not for Resale

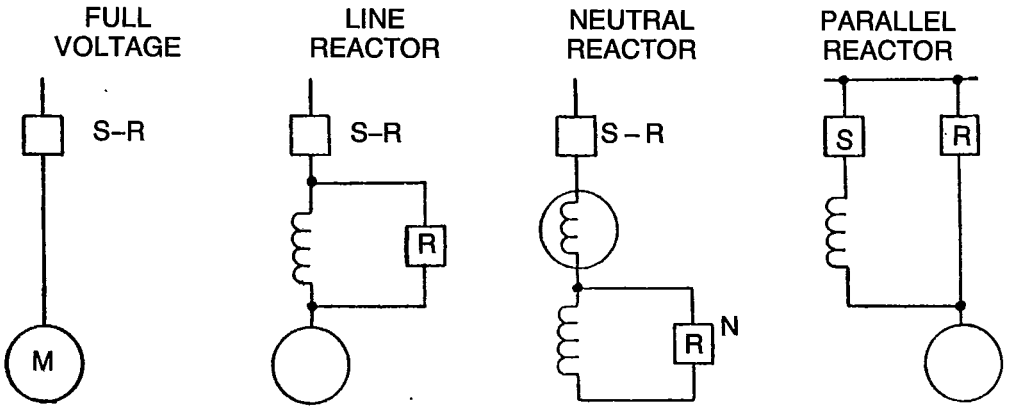

Figure 5-1.a Figure 5-1.b Figure 5-1.c Figure 5-1.d

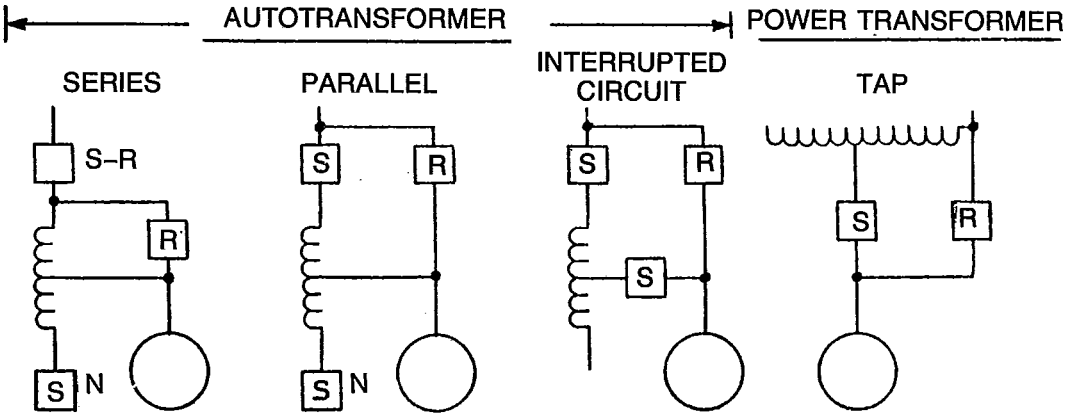

Figure 5-1.e Figure 5-1.f Figure 5-1.g Figure 5-1.h

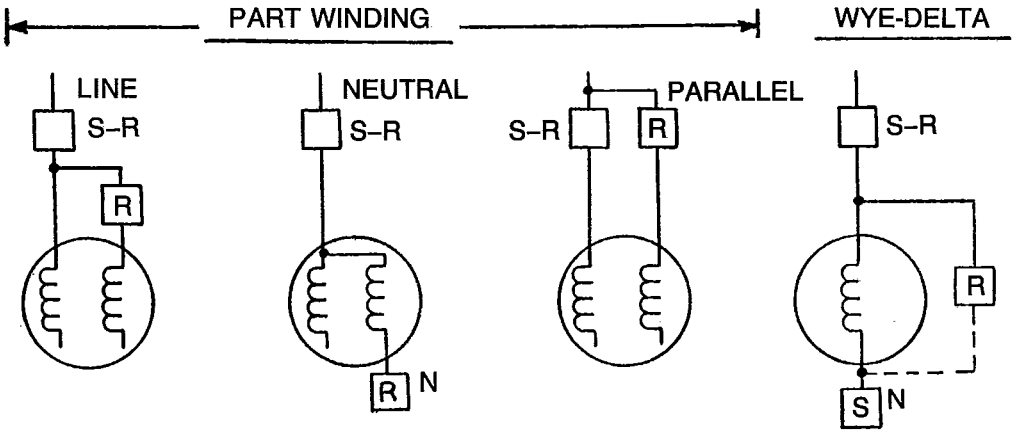

Figure 5-1.i Figure 5-1.j Figure 5-1.k Figure 5-1.m

S — STARTING **R — RUNNING** **N — NEUTRAL**

Figure 5-1
METHODS OF AC MOTOR STARTING

Copyright National Electrical Manufacturers Association
Provided by IHS under license with NEMA
No reproduction or networking permitted without license from IHS
Not for Resale

5.2.4.5 With autotransformer reduced voltage starting (Figures 5-1.e, 5-1.f, and 5-1.g) the starting current is determined where:

I = Locked rotor amperes at full voltage.
P = Transformer tap used (fraction of full voltage).
Im = Rated full load current of motor.

a. The starting current drawn from the line $= I \times p^2 + 0.25\ Im.$
b. The starting current taken by the motor $= I \times p.$
c. The autotransformer neutral current $= I \times p - I \times p^2 + 0.25\ Im.$

5.2.4.6 With power transformer tap starting (Figure 5-1.h), the starting current equals I×p as covered for autotransformer reduced voltage starting.

NEMA Standard 3-5-1990.

5.3 THREE-COIL TRIP OR EQUIVALENT FAULT PROTECTION

For overcurrent fault protection of three-phase circuits, circuit breakers shall be provided with a minimum of three overcurrent relays or trip coils, one in each phase (except that no overcurrent trip is required in a grounded phase conductor.) Where overcurrent relays operated from three current transformers are used, an overcurrent relay in the residual circuit of the current transformers shall be permitted to replace one of the phase relays.

NEMA Standard 3-5-1990.

5.4 CIRCUIT BREAKERS NORMALLY DESIGNED FOR THREE-PHASE SYSTEMS WHEN APPLIED TO SINGLE-PHASE SYSTEMS BELOW 72.5 kV HAVING ONE CONDUCTOR GROUNDED

5.4.1 Voltage Rating

Circuit breakers for use on single-phase systems below 72.5 kV having one conductor grounded shall be applied on the basis of the next higher voltage rating corresponding to 1.73 times the voltage of the circuit to ground. They shall be given the dielectric tests specified for the derived voltage rating.

NEMA Standard 3-5-1990.

EXAMPLE—A circuit breaker on an 11,000-volt circuit having one conductor grounded would be designed for dielectric test based on not less than 19,000 volts and, consequently, a 25.8 kV circuit breaker would be required. (This example is approved as Authorized Engineering Information.)

5.4.2 Short-circuit Current Rating

Where two-pole circuit breakers are applied to single-phase systems below 72.5 kV in each side of the circuit, they shall be rated in rms amperes corresponding to the short-circuit current rating at the normal rated voltage of the circuit. In making such applications, refer to the limitations listed in 4.5.2.3 of ANSI C37.04.

EXAMPLE—The circuit breaker, installed as shown in Figure 5-2, will be given a short-circuit current rating corresponding to 11,000-volt operation.

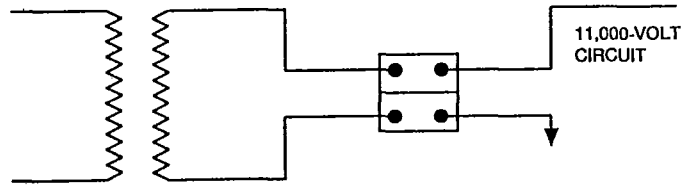

Figure 5-2
CIRCUIT BREAKER INSTALLATION
(11,000 VOLTS)

When single-pole circuit breakers are applied to single-phase systems below 72.5 kV having one conductor grounded, they shall be rated in rms amperes at 1.15 or K (whichever is smaller) times the current value corresponding to the interrupting capacity at a voltage 1.73 times the normal rated voltage of the circuit.

EXAMPLE—The circuit breaker, installed as shown in Figure 5-3, will be given an interrupting rating of 1.15 or K times its three-phase rating at 19,000 volts, whichever is smaller.

NEMA Standard 3-5-1990.

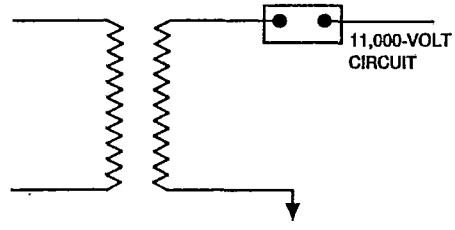

Figure 5-3
CIRCUIT BREAKER INSTALLATION
(19,000 VOLTS)

5.5 NEUTRAL GROUNDING CIRCUIT BREAKERS

5.5.1 Rated Voltage

The rated maximum voltage should at least correspond to the system nominal line-to-line voltage since the line-to-line voltage may appear across open neutral grounding circuit breakers during certain short-circuit conditions.

Copyright National Electrical Manufacturers Association
Provided by IHS under license with NEMA
No reproduction or networking permitted without license from IHS

Not for Resale

5.5.2 Rated Current

The size of neutral grounding circuit breakers should be such that their short-time current capability will not be exceeded.

5.5.3 Rated Short-Circuit Current

A circuit breaker used for neutral grounding service only may be applied up to 115 percent of its rated short-circuit current (at rated maximum voltage) or K times its rated short-circuit current, whichever is smaller (see ANSI C37.06 and C37.09). This is possible since the circuit breaker is selected on a line-to-line voltage basis but only line-to-neutral voltage appears across any such circuit breaker when opening neutral ground current.

Authorized Engineering Information 3-5-1990.

5.6 MULTIPLE SINGLE-POLE CIRCUIT BREAKERS

5.6.1 Slow-speed circuit breakers (above 8 cycles) without a mechanical interlock or connection to insure simultaneous tripping of all poles, and regardless of the relay protection scheme, shall be applied where the maximum of the system voltage range variation is no more than 87 percent of the circuit breaker rated maximum voltage. In addition, the short-circuit current shall be not greater than 87 percent of the rated short-circuit current.

5.6.2 High-speed circuit breakers (8 cycles or less) without a mechanical interlock or connection between poles and without an adequate tripping scheme to insure simultaneous tripping of all poles shall be applied where the maximum of the system voltage range variation is no more than 87 percent of the circuit breaker rated maximum voltage.

5.6.3 High-speed circuit breakers (8 cycles or less) having an adequate tripping scheme to trip all poles simultaneously and with or without a mechanical interlock or connection between poles shall be applied at their rated values.

NEMA Standard 3-5-1990.

5.7 REPETITIVE DUTY CIRCUIT BREAKERS FOR ARC FURNACE SWITCHING

Power operated circuit breakers particularly designed for arc furnace switching, when operating under usual service conditions, shall be capable of operating at least the required number of times given in Table 5-1. The operating conditions and the permissible effect upon the circuit breakers are given in the following paragraphs. For each column, all paragraphs listed shall be considered.

5.7.1 Servicing

Servicing shall consist of adjusting, cleaning, lubricating, tightening, and such, as recommended by the manufacturer. The operations listed are on the basis of servicing at intervals of 6 months or less.

NEMA Standard 3-5-1990.

5.7.2 Circuit Conditions

Each "operation" referred to in Table 5-1 consists of closing and opening the circuit breaker under the specified load conditions.

5.7.3 Operating Conditions

Frequency of operation should not exceed twenty in 10 minutes or thirty in 1 hour. Rectifiers, air systems, or other auxiliary devices may further limit the frequency of operations.

Authorized Engineering Information 3-5-1990.

Servicing shall be applied at no greater intervals than shown in the fourth column of Table 5-1.

5.7.4 Conditions of the Circuit Breaker

After the operations shown in Table 5-1, the following shall have taken place:

1. No parts shall have been replaced.
2. The circuit breaker shall meet all of its current, voltage, and short-circuit current ratings.
3. The circuit breaker shall meet all of its current and voltage ratings but not necessarily its short-circuit current rating.

NEMA Standard 3-5-1990.

Table 5-1
OPERATING CAPACITY

Circuit Breaker Rating		Arc Furance Rating Full Load, Amperes	Maximum Number of Operations Between Servicing	Number of Operations	
Rated Maximum Voltage, kV	Rated Continuous Current, Amperes			No Load Mechanical	Switching and Interrupting
15.5 25.8 38	1200/2000	Not over 200 amperes	250	20,000	See Schedule 5

Copyright National Electrical Manufacturers Association
Provided by IHS under license with NEMA
No reproduction or networking permitted without license from IHS
Not for Resale

5.7.5 Minimum Operations Under Fault Conditions

If a fault operation occurs before the completion of the permissible operations, it is not to be inferred that the circuit breaker can meet its short-circuit current rating or complete its number of operations without servicing and making replacements, if necessary. (This sentence is approved as Authorized Engineering Information.)

5.7.5.1 SCHEDULE 1

10,000 operations interrupting no load or load currents less than 100 amperes, plus 5000 operations interrupting fault currents up to 350 amperes, plus one opening operation (O) at rated short-circuit current.

5.7.5.2 SCHEDULE 2

2500 operations interrupting no load or load currents less than 1200 amperes, plus 200 operations interrupting fault currents up to 3600 amperes, plus one opening operation (O) at rated short-circuit current.

5.7.5.3 SCHEDULE 3

2000 operations interrupting no load or load currents less than 2000 amperes, plus 200 operations interrupting fault currents up to 6000 amperes, plus one opening operation (O) at rated short-circuit current.

5.7.5.4 SCHEDULE 4

1000 operations interrupting no load or load currents less than 3000 amperes, plus 50 operations interrupting fault currents up to 9000 amperes, plus one opening operation (O) at rated short-circuit current.

5.7.5.5 SCHEDULE 5

12,000 operations interrupting no load or load currents less than breaker continuous current rating, plus 3000 operations interrupting fault currents up to 4000 amperes, plus one opening operation (O) at rated short-circuit current.

NEMA Standard 3-5-1990.

Copyright National Electrical Manufacturers Association
Provided by IHS under license with NEMA
No reproduction or networking permitted without license from IHS

Not for Resale

Section 6
RECOMMENDED INSTALLATION, OPERATION, AND MAINTENANCE PROCEDURES

(This Section has been approved as Authorized Engineering Information.)

6.1 GENERAL

It is impossible to cover here in detail the complete rules for the installation of each of the different types of circuit breakers manufactured, but the following information is given relative to the most important points to be considered.

The instructions sent by the manufacturer should be carefully studied and followed in order to secure the best results.

6.2 SHIPMENT

Each circuit breaker, before leaving the factory, is carefully inspected and packed. Immediately upon arrival, circuit breakers should be examined for any damage sustained while en route. If injury is evident or indication of rough handling is visible, the carrier (transportation company) and the manufacturer should be promptly notified.

6.3 STORAGE

When a circuit breaker can be set up immediately in its permanent location, it is advisable to do so even though the circuit breaker will not be placed in service for some time. If the circuit breaker is of the oil type, the tank should be cleaned and dried and then filled with oil.

If the circuit breaker cannot be installed in the proper location immediately, and it is necessary to store the equipment, the circuit breaker should be kept in a clean, dry place. It should not be exposed to dirt, to the action of corrosive gases such as chlorine, or to possible mechanical injury.

If stored out of doors, the circuit breaker and any unassembled parts should be adequately protected from moisture, dirt, injurious gases, and mechanism injury. Air insulated circuit breakers incorporating fibrous insulation and designed for indoor service should not be stored outdoors.

Machined parts of operating mechanisms, and such, should be flushed to prevent rusting, and, if the circuit breakers are stored for any length of time, should be inspected periodically to see that rusting has not started and to insure their good mechanical condition.

Particular care should be taken to protect insulating parts which might absorb moisture. These parts should be stored in a dry room. Where possible, space heaters should be energized to minimize condensation.

6.4 UNPACKING

When unpacking a circuit breaker, the crating or boxing should be removed carefully with a nail puller. The fragile porcelain bushings and other parts are sometimes broken by driving the wrecking bar into crates or boxes carelessly.

Check all parts with the packing list.

Avoid bending, breaking, or injuring any parts.

Do not leave screws, bolts, nuts, and such, in the packing material.

Clean the parts before assembling them.

See that the manufacturer's instruction books and tags are kept with the circuit breaker.

A thorough inspection should be made to see that the packing braces used to hold moving parts during shipment are taken out.

6.5 HANDLING

Cranes are convenient for handling circuit breakers. When using cable slings to support the circuit breaker, do not allow the slings to strike the bushings or other fragile parts, as any strain on these may cause them to crack or break. Before attempting to handle circuit breakers, their weight should be determined from the circuit breaker manufacturer in order that the lifting means will be of ample strength.

If cranes are not available, the circuit breaker should be moved in any convenient way, provided proper precautions are taken for supporting the weight of the circuit breaker and preventing dangerous tilting. Special care should be exercised to see that the circuit breaker is not injured through shocks or jars due to rough handling.

6.6 SELECTION OF LOCATION FOR INSTALLATION

The circuit breaker should be installed in a clean, dry place free from the destructive action of acids, alkalis or gases, such as chlorine, and where good ventilation can be secured.

The circuit breaker should be so located that it will be readily accessible for cleaning and inspection. Sufficient space should be provided for the easy removal of the oil tanks or other parts and for manual operation.

Copyright National Electrical Manufacturers Association
Provided by IHS under license with NEMA
No reproduction or networking permitted without license from IHS
Not for Resale

6.7 MOUNTINGS

6.7.1 Mounting in Cells

The construction of the cell structure should not be attempted until the approved working drawings are fully understood. If these drawings are not furnished by the manufacturer, they should be obtained from the party responsible for this information.

Cells and barriers should be made of some noncombustible material such as steel, concrete, or brick. Steel cells are recommended.

Satisfactory operation of a circuit breaker depends upon the correct design of the structure and its parts and can only be obtained with rigid construction.

Cell structures for air insulated circuit breakers should provide striking distances to live circuit breaker parts adequate for the service voltage on which the circuit breaker is applied.

Proper anchorage of the tie rods and foundation bolts should be provided. When the cells are built upon a concrete floor, this anchorage should be securely embedded in the concrete.

If the cell walls are made of concrete, particular care should be taken to carry these walls up plumb and true. The dimensions of the walls should follow accurately the dimensions given in the approved drawings.

Removable plates or doors are recommended for cells to prevent accidental contact with live parts.

It is recommended that the design of cell doors and barriers be such as to prevent communication between compartments.

It is recommended that cells be provided with adequate ventilation in the top and bottom in order to permit free circulation of air through the cell and thus, to prevent an abnormal rise of temperature in the cell.

6.7.2 Mounting on Framework

If the circuit breaker has been shipped assembled in its framework, it will only be necessary to correctly locate and fasten the frame in position on its foundation. The foundation bolts should be left loose to permit the frame to be properly plumbed and leveled by inserting shims under floor flanges (or feet of frames) where necessary. After this has been done, the foundation bolts should be tightened and the frame securely fastened to its foundation.

Frameworks are sometimes supplied with strengthening members for shipment. These members should be removed after the framework has been placed in position and before the foundation bolts have been tightened.

The manufacturer's instructions should be carefully followed in setting up a frame-mounted circuit breaker that is shipped partly disassembled. The general procedure is:

1. Set up and properly level the frames; and
2. Inspect contacts and, if necessary, adjust them.

6.7.3 Floor Mounted

Each unit should be placed in position on the floor and leveled. It should be fastened securely to its foundation until the operating mechanism has been correctly aligned.

The manufacturer's instructions should be followed very carefully, making sure of the following points:

1. Carefully install the units on the foundation, making sure they are level, in line, and properly spaced;
2. Connect the operating mechanisms so they will work freely; and
3. Inspect contacts and, if necessary, adjust them.

6.7.4 Bushings

The bushings (insulator) should not be allowed to strike against parts of the framework, panel, or other objects, when installing or handling the circuit breaker. Bushings are often broken, cracked, or loosened in their supports by unnecessary jars due to careless handling.

Where heavy bushings have to be mounted in position by the purchaser, a rope sling will be found convenient for proper handling. The bushing should be lowered into place very carefully without letting the porcelain petticoating strike the side of the framework, and such, as this may crack or otherwise injure the bushing.

Before attempting to handle the bushings, their weight should be determined from the circuit breaker manufacturer in order that the lifting means will be of ample strength.

In the case of high-voltage bushings that should be filled with oil at the time of installation, the drain plug at the lower end of the bushings should be inspected and, if necessary, tightened so that the bushing will not leak.

6.7.5 Operating Mechanism

As the proper alignment of the links, pins, and such, of the operating mechanism is essential to the proper operation of the circuit breaker, these should be carefully checked and the manufacturer's instructions followed explicitly. A circuit breaker should not be operated until a thorough inspection is made of the operating mechanism.

For large multipole circuit breakers, the connecting rods or couplings between units should be aligned before satisfactory operation is possible. The connecting rods or couplings should be adjusted so that, in closing the circuit breaker, the contacts of each unit are made

Copyright National Electrical Manufacturers Association
Provided by IHS under license with NEMA
No reproduction or networking permitted without license from IHS
Not for Resale

at the same instant, and, in opening the circuit breaker, the contacts of each unit break at the same instant.

6.7.6 Contacts

Contacts should be adjusted in accordance with the manufacturer's instructions. Power-operated circuit breakers should have their contacts adjusted by closing the circuit breaker with the maintenance closing device.

Contacts should be kept clean of foreign material, oxides, and such. Where the contact surfaces have been plated to prevent the formation of high-resistance oxides, care should be taken not to file away the plated surface. Frequent operation of the circuit breaker is helpful in preventing the formation of high-resistance oxides. Bolted connections should be thoroughly cleaned and tightly clamped.

6.7.7 Manually Operated Circuit Breakers

The lever, handle, or crank for manual operation should be connected to the operating mechanism if this connection has not been made by the manufacturer, making sure that all parts (shafts, pins, and such) are properly aligned as shown in the manufacturer's instructions. Instead of attempting to bend or force parts together during installation, reference should be made to the manufacturer's instructions to see if they have been explicitly followed.

6.7.8 Power Operated Circuit Breakers

The connecting links, shafting, and such, between the circuit breaker pole unit mechanism and the operating mechanism (solenoid, motor, or other device) supplied for power operation should all be carefully aligned. The circuit breaker should be operated slowly by hand before it is operated with power. The operation should be observed to see that it is smooth throughout the closing and opening of the circuit breaker, that no binding occurs, and that no excessive play is noticeable between parts. The clearances at the mechanism stops should be checked to see that they are in accordance with the manufacturer's recommendations.

In the case of oil circuit breakers, the number of power operations without oil should be restricted to a minimum.

Circuit breakers using compressed air as an interrupting medium should not be operated with the maintenance closing device when there is pressure in the air receiver.

6.8 OIL

6.8.1 Sampling

A large-mouthed glass bottle should be used in sampling oil. The bottle should be cleaned, dried with benzine, and free from moisture before it is used. A cork stopper should be used.

The sample of oil for dielectric tests should be at least 1 pint (16 ounces) and, if a number of tests are to be made, 1 quart (32 ounces).

Tests samples should be taken only after the oil has settled for some time, varying from 8 hours for a barrel to several days for a large oil circuit breaker tank. Cold oil is much slower in settling. Oil samples from large oil circuit breakers should be taken from the valve at the bottom of the tank. Oil samples from small oil circuit breakers, which have no valves, and from barrels should be taken from the bottom. A brass or glass "thief" can be conveniently used for this purpose. The same method should be used for cleaning the thief as is used for cleaning the oil sample container.

When drawing samples from the bottom of a large oil circuit breaker or a large tank, sufficient oil should first be drawn off to make sure that the sample will be composed of oil from the bottom of the tank and not from the oil stored in the sampling pipe. A glass receptacle is desired so that water, if present, may be readily observed. If moisture is found, an investigation of the cause should be made and a remedy applied. If water is not present in sufficient quantity to settle out, the oil may still contain considerable moisture in a suspended state and should be tested for dielectric strength.

6.8.2 Oil Testing

The device used for testing oil for dielectric strength should have a spark gap with disc terminals 1 inch in diameter. The testing cups should be cleaned thoroughly to remove any particles of cotton fiber, and such, and rinsed out with a portion of the oil to be tested. It is advisable to check the condition of the cup occasionally with dry benzine, which should test not less than 25 kV.

The spark gap receptacle (cup) should be nearly filled with oil and allowed to stand for a few minutes to give air bubbles time to escape before making the test.

The voltage should be increased at a rate of approximately 3000 volts per second. Five breakdowns should be made on each filling, after which receptacle should be emptied and refilled with fresh oil from the original sample. The average voltage of 15 tests (5 tests on each 3 fillings) is usually taken as the dielectric strength of the oil. It is recommended that the test be continued until the averages of at least 3 fillings are essentially constant.

The dielectric strength of the oil, when shipped, is at least 26,000 volts tested in the standard gap. If the oil in an oil circuit breaker in service tests at less than 16,500 volts, it should be filtered.

New oil having a dielectric strength less than 22,000 volts should not be put into the oil circuit breaker tank.

Copyright National Electrical Manufacturers Association
Provided by IHS under license with NEMA
No reproduction or networking permitted without license from IHS
Not for Resale

The oil should be checked for acidity and, if necessary, treated to remove acids or replaced.

6.8.3 Oil Drying

In removing moisture from the oil, it is preferable to filter the oil from one tank or barrel and discharge it to another. If necessary, the oil may be drawn from the bottom of a tank or barrel and discharged at the top. If there is much water in the oil, the oil should be allowed to settle, the moisture should be drawn off, and any moisture remaining should be treated separately. It should be noted that the usual methods of drying oil do not remove acid.

Before draining the oil from the circuit breaker or circulating the oil through a pipe line connected to a filter press, the oil circuit breaker should be disconnected from all electric power and the terminals should be grounded.

6.8.4 Filling Tanks With Oil

Before the oil circuit breaker is filled with oil, all accessories, such as valves and gauges should be fitted to the circuit breaker and made oil tight. The threads should be filled with shellac or its equivalent before being put in place.

When drums of oil are brought into a room which is warmer than they are, they should be allowed to stand before they are opened until there is no condensation on the outside and until they are thoroughly dry. In outdoor installations, the preparation and filling of the circuit breaker tank should be done on a clear, dry day or protection of some kind should be provided to prevent the absorption of moisture by the oil during the filling process.

Metal or oilproof rubber should be used. (Rubber hose containing sulphur should not be used as oil dissolves the sulphur. This may cause trouble as sulphur attacks copper.)

It is very important that the surface of the oil when cold (77°F (25°C) American National Standard; 68°F (20°C) International Standard*) be at the proper oil level as indicated by the gauge or marking on the tank.

*See paragraph 3-15 of ANSI/IEEE 3

6.8.5 Filling a De-energized Breaker with SF_6

SF_6 breakers are generally shipped with a positive pressure of approximately 5 psig of SF_6, therefore, evacuation is not required before filling. Before filling with SF_6 check the pressure gauge to confirm that the pressure has not been lost due to damage or leakage and then pull a vacuum to approximately 2 mm of hg before filling with SF_6. Maintaining the vacuum for a period of time is not required unless there has been exposure of the interior pole unit assemblies to the atmosphere in which case the procedures in the maintenance section should be followed.

Before the breaker is operated or placed into service it must be filled with sulfur hexafluoride gas to the proper pressure taking into consideration the ambient temperature.

6.8.5.1 Equipment Required

1. SF_6 pressure regulator (preferred) on the SF_6 cylinder adapter supplied with the tool kit.
2. Hose supplied with the tool kit.
3. Female Quick Disconnect Fitting supplied with the tool kit.
4. Wrenches.

Thermometer for ambient temperature measurement. The manufacturer's installation manual will specify the amount of SF_6 gas that will be required to completely fill a breaker.

6.8.5.2 Filling of Breaker

To fill breaker proceed as follows:

1. Remove cap from the SF_6 cylinder fitting and attach the SF_6 pressure regulator or the special adapter.
2. Attach and tighten hose to regulator or adapter.
3. Attach female quick disconnect to the end of hose loosely.
4. "Crack" SF_6 cylinder valve and allow SF_6 gas to flow through hose exhausting at the loose fitting, thereby purging air form hose.
5. Shut off cylinder valve and tighten quick disconnect to the hose.
6. Remove cap from the breaker fill valve fitting and attach the quick disconnect with hose.
7. Open SF_6 cylinder valve slowly and fill to proper SF_6 pressure determined by ambient temperature measurement and the gas dynamics curve provided by the manufacturer.
8. After proper pressure is obtained, shut cylinder valve and disconnect the female quick disconnect from the breaker fill valve fitting first before any other fitting is loosened. Replace the cap on the breaker fill valve.

6.8.5.3 Moisture

The maximum permissible moisture content of the SF_6 shall be as specified by the manufacturer. If the pole units have not been open or exposed to a humid atmosphere, it will not be necessary to check for moisture after filling from an SF_6 bottle. If there is reason to suspect high moisture, do not use the rubber filling hose for checking. Use stainless steel tubing for this purpose.

Copyright National Electrical Manufacturers Association
Provided by IHS under license with NEMA
No reproduction or networking permitted without license from IHS
Not for Resale

6.8.6 Connections

Before making any electrical connections, every precaution should be taken to see that all leads to be connected to the circuit breaker are deenergized with proper safety grounds applied.

All terminals should be fastened to the leads and tightly clamped to the connection studs.

Connections to the circuit breaker are made by terminals or connection bars fastened to the end of the bushing. When tightening the terminal or clamp bolts, care should be taken not to turn the stud in the bushing (insulator).

All joints should be clean, bright, free from dents or burns and, preferably, silver plated or the equivalent.

All nuts on the current-carrying stud should be set up firmly against the terminal lugs to obtain good contact. The nut should turn freely on the stud. If the nut does not turn freely, it should not be forced down with a wrench but should be tapped lightly on its outer surfaces with a hammer and at the same time turned by hand. A nut that cannot be worked down in this manner will ruin the thread if any attempt is made to force it. If the joints are not made correctly, dangerous heating of the circuit breaker may result.

Cables and bars should be properly supported so that the circuit breaker is not subjected to unnecessary strains. The studs should not carry cable or bus-bar strains. Any strain that at first has no apparent effect on the stud alignment will, in time, misalign the studs and closing of the circuit breaker, and poor contact may result.

To avoid heating, the connecting leads should have a current-carrying capacity at least equal to that of the current-carrying parts of the circuit breaker.

To prevent weakening of the insulation, sharp turns, corners, and edges should be avoided for insulated wiring. Care should be observed in installing cables so that bends are not used with a radius shorter than that recommended by the cable manufacturer.

Cables, bars, or other conductors should be properly designed, supported, and braced so as not to exert strains on the bushing or other circuit breaker parts. The use of bends, loops, or flexible connections is recommended.

6.8.6.1 Secondary and Control Wiring

All wires should be run in conduit. Wires should be separate and remote from high-voltage leads and should not be in the same duct or even parallel to the high-voltage leads unless the distance separating the two sets of wiring is sufficient to prevent possible communication between them as a result of short circuits.

The wiring should be so installed that trouble on one circuit breaker cannot be communicated to the wiring of another circuit breaker.

Wiring of adequate size should be used for electrically operated circuit breakers so that, with the full operating current flowing to the operating mechanism, the voltage across the terminals of the operating mechanism will be not less than the minimum voltage of the range given in Table 8 of ANSI C37.06.

6.8.6.2 Pneumatically Operated Circuit Breakers

For pneumatically operated circuit breakers, the piping should be of adequate size and arranged to pass air at a sufficient rate when the pressure in the circuit breaker storage tank has been reduced by previous operations. (See manufacturer's instructions.)

6.8.6.3 Ground Connections

The frame of each unit of a circuit breaker should be permanently grounded. The usual practice is to connect a heavy cable or solid copper bar to the frame and to the ground at two diametrically opposite sides of the circuit breaker. The ground connections should be adequate to carry maximum line-to-ground fault current.

A good permanent low-resistance ground is very important for adequate protection. A poor ground may be worse than no ground at all, since it gives a false feeling of safety to those working around equipment and may also result ultimately result in loss of life or damage to the apparatus.

6.9 AUXILIARIES

6.9.1 Tank Lifters

Tank lifters for raising or lowering the oil tank are generally used when the weight of the tank is too great to allow ready handling by hand. One tank lifter in a station is usually sufficient for all oil circuit breakers of the same type and capacity. It may be operated to lower or raise a tank of one circuit breaker (or unit) and then be moved to another circuit breaker (or unit).

When it is necessary to remove the oil tank, care should be taken that the bushings or contacts are not forced or jarred out of alignment. The tank should contain sufficient oil before it is replaced, except in the case of tanks that have oil filling connections. It is necessary to have the oil at the correct level to keep the contacts covered properly and also to have the proper air chamber above the oil for best operation of the circuit breaker.

6.9.2 Other Lifters

In the case of oilless circuit breakers, care should be used in removing heavy parts necessary for maintenance and inspection to prevent injury to the contacts or other

Copyright National Electrical Manufacturers Association
Provided by IHS under license with NEMA
No reproduction or networking permitted without license from IHS
Not for Resale

parts. Where the parts are so heavy that they are difficult to handle by hand, suitable lifters should be used.

6.9.3 Time Element Dashpots

Oil dashpots should be examined periodically to see that they are properly filled with suitable oil in accordance with the manufacturer's instructions. By-pass and check valves should be examined and cleared. Dirty or gummy oil should be replaced. Substitution of oils other than those specified or furnished by the manufacturer should be avoided. Only in extreme emergencies should substitutions be made and, then, only by authorized and competent persons. If it is necessary to supply oil temporarily for dashpots, oil should be chosen which will not become thick at the lowest temperature to which it will be subjected. Clean oil having the proper characteristics is important for correct operation.

6.9.4 Tripping Coils—Automatic Trip Operation

Tripping coils used in the secondary of instrument and bushing-type current transformers are calibrated in secondary current values, which, when multiplied by the ratio of the transformer used, give the corresponding primary or line current values. The markings on the calibrating tubes represent the ampere values required to lift the plunger and trip the circuit breaker.

Series trip coils are calibrated in primary current values, and the markings on the calibrated tubes represent the line current values required to trip the circuit breaker.

6.9.5 Undervoltage Trip Device

The proper holding and releasing action of undervoltage coils and mechanisms is dependent upon both mechanical adjustment and upon the application of the voltage (and frequency for ac systems) specified on the nameplate. These devices should be inspected periodically to insure that their operation is not too violent since such operation would cause unnecessary strains on them.

AC release mechanisms should be examined periodically to see that the iron circuit is properly sealed and that the pole pieces are cleaned of rust and make a true flat contact. Care on this point will prevent or lessen humming and failure of coils from excessive current due to open iron circuits.

When undervoltage devices are supplied for use in series with resistors, the connections should be carefully checked before full voltage is thrown across the operating coils.

6.9.6 Auxiliary Switches

The bearings of auxiliary switches should be oiled occasionally. A thin coat of petrolatum should be applied to the contact surfaces. A periodic inspection of the contacts for wear is recommended.

6.9.7 Resistors and Rectifiers

All connections to resistors and rectifiers should be kept tight. Each was designed for a specific duty, and the longest life will be obtained if overloading is avoided. Resistors or rectifiers should be kept free from dirt and other foreign matter and should be allowed adequate space for ventilation. The full value of each resistor or rectifier is needed for its particular duty. Short-circuiting a broken-down resistor is not advisable. In making replacements of broken-down or burnt-out resistors or rectifiers, the manufacturer's specifications should be followed explicitly.

6.10 FINAL INSTALLATION INSPECTION

After a circuit breaker has been installed and all mechanical and electrical connections have been completed, the following inspections and tests should be made:

1. See that the circuit breaker is properly set up and leveled on its supporting structure (panel, pipes, structural iron or steel frame, and such).
2. See that heaters, where used, are operating correctly.
3. See that all bearing surfaces of the operating mechanism have been lubricated, where required.
4. Close the circuit breaker slowly by hand (when it is disconnected from the line) noting that the operating rod (or rods) and contacts are properly adjusted for correct alignment. Good contact should be made with the circuit breaker closed. Circuit breakers using compressed air as an interrupting medium should not be operated with the maintenance closing device if there is pressure in the air receiver.
5. See that the tanks of oil circuit breakers are filled with clean, dry oil to the proper level (oil line or gauge).
6. Inspect all insulated wiring to see that no damage has resulted during installation and that connections are tight.
7. Test the wiring for possible grounds, short circuits, or open circuits.
8. See that all connections of control and secondary wiring are tight.
9. See that all current-carrying parts are correctly insulated.
10. See that all joints, whether bolted joints of copper bars of soldered (or clamped) joints made with wires and cables, are made correctly.
11. See that all covers and bolted connections of outdoor circuit breakers are securely tightened so as

Copyright National Electrical Manufacturers Association
Provided by IHS under license with NEMA
No reproduction or networking permitted without license from IHS
Not for Resale

to prevent the entrance of moisture and that tanks of all oil circuit breakers are drawn tightly against their gaskets.

12. In the case of circuit breakers, blow out all foreign material with dry air.

6.11 POWER OPERATED CIRCUIT BREAKERS

Power operated circuit breakers should be operated manually (by hand) first, to ensure that all parts move freely and without binding. After careful inspection has shown all parts to be in proper working order during the manual operation, the circuit breaker may be operated with power at normal operating voltage or air pressure.

6.12 MAINTENANCE

The safety and the successful functioning of connected apparatus depend upon the proper operation of the circuit breaker. Therefore, the circuit breaker should have regular systematic maintenance and inspection.

The following points require special attention:

1. Be sure that the circuit breaker and its mechanism is disconnected from all electric power, both high voltage and control voltage, before it is inspected or repaired.
2. Exhaust the pressure from air receiver of any compressed air circuit breaker before it is inspected or repaired.
3. After the circuit breaker has been disconnected from power lines, attach the grounding leads properly before touching any of the circuit breaker parts.
4. Inspect the operating mechanism periodically and keep the bearing surfaces of the toggles, rods and levers adequately lubricated where required.
5. Keep the mechanism clean.
6. Maintain contacts in good operation condition, as described by the manufacturer.
7. Be sure the circuit breaker is well grounded.
8. See that bolts, nuts, washers, cotter pins and all terminal connections are in place and tight.
9. Inspect the bushing (insulator) supports, as the vibration due to the operation of the circuit breaker may cause the bushings to move slightly and result in misalignment of contacts.
10. Clean the bushings at regular intervals where abnormal conditions, such as salt deposits, cement dust or acid fumes, prevail to avoid flashovers resulting from the accumulation of foreign substances on bushing surfaces.
11. See that the oil is kept at the proper level in the tank (or tanks) and that the proper dielectric strength of the oil is maintained. (See 6.8.2 for instructions for testing oil.)

    See that the moisture content in SF_6 circuit breakers is within manufacturer's specification and that the breaker has proper SF_6 pressure.
12. Test the circuit breaker oil every six months, change or filter the oil, if necessary.
13. Filter the oil after successive openings under load, short circuit, and such, if it shows carbonization or if its dielectric strength is lowered because of dirt or suspended matter. Test the oil before replacing it in the tank. Carbonization is indicated by a flaky, black precipitate that floats in the oil when disturbed.

    See that the compartment heaters of air magnetic and vacuum circuit breakers are operating. Perform megger or Hi-potential test to check dielectric strength as prescribed by the manufacturer.
14. Do not allow moisture to come into contact with the oil during filtering.
15. Remove all oil at least once a year and thoroughly clean the tank (or tanks) and other parts that have been in contact with the oil, e.g., liners, bushings, lift rods, guides, and such.
16. On all indoor oil and gas-tight circuit breakers equipped with separating chambers to exhaust the circuit breaker during and after an operation, an exhaust header and necessary pipe lines should be provided to exhaust the gases out of doors.
17. Before entering large oil circuit breaker tanks after the oil has been drained, care should be taken to see that sufficient time has elapsed to permit the gas residue remaining in the circuit breaker to escape.
18. Clean and, if necessary, dry the insulating materials across the interrupter to ground or parts of different potential on all air or oilless circuit breakers (refer to the manufacturer's instruction book for specific instructions for each type of circuit breaker).
19. At all inspections operate the circuit breaker by hand to see that the mechanism works smoothly and correctly before operating it with power.
20. Circuit breakers with stored energy mechanisms (compressed air, hydraulic, spring) should not be operated with the maintenance closing devices when there is stored energy in the mechanism.
21. A circuit breaker with oil tanks removed should not be operated with power any more often than is absolutely necessary. For certain compressed gas (SF_6) circuit breakers, power operations without sufficient gas are not permitted.
22. When servicing circuit breakers having vacuum interrupters, be certain to ground the opposite ends of the interrupter and the midband rings, if

Copyright National Electrical Manufacturers Association
Provided by IHS under license with NEMA
No reproduction or networking permitted without license from IHS
Not for Resale

any, following the removal of the circuit breaker from service or following dielectric testing before attempting to handle interrupters.

23. It is again strongly urged that the manufacturer's instructions for each circuit breaker be carefully read and followed.

6.13 SPARE PARTS

It is recommended that sufficient spare parts be carried in stock to enable the operators of circuit breakers to promptly replace any worn, broken, or damaged parts. The manufacturer will provide the purchaser with a list of recommended spare parts upon request.

Copyright National Electrical Manufacturers Association
Provided by IHS under license with NEMA
No reproduction or networking permitted without license from IHS

Not for Resale

NEMA STANDARDIZATION

The purpose of NEMA Standards, their classification and status, are set forth in certain clauses of the NEMA *Standardization Policies and Procedures* manual and are referenced below.

Purpose of Standards

National Electrical Manufacturers Association standards are adopted in the public interest and are designed to eliminate misunderstandings between the manufacturer and the purchaser and to assist purchasers in selecting and obtaining the proper product for their particular needs. Existence of a National Electrical Manufacturers Association standard does not in any respect preclude any member or nonmember from manufacturing or selling products not conforming to the standard. *(Standardization Policies and Procedures, p. 1)*

Definition of a Standard

A standard of the National Electrical Manufacturers Association defines a product, process, or procedure with reference to one or more of the following: nomenclature, composition, construction, dimensions, tolerances, safety, operating characteristics, performance, rating, testing, and the service for which they are designed.

(Standardization Policies and Procedures, p. 2)

Dimensions

Where dimensions are given for interchangeability purposes, alternate dimensions satisfying the other provisions of the Standards Publication may be capable of otherwise equivalent performance.

(Standardization Policies and Procedures, p.8)

Categories of Standards

National Electrical Manufacturers Association Standards are of three classes:

1. NEMA Standard, which relates to a product, process, or procedure commercially standardized and subject to repetitive manufacture, which standard has been approved by at least 90 percent of the members of the Subdivision eligible to vote thereon;
2. Suggested Standard for Future Design, which may not have been regularly applied to a commercial product, but which suggests a sound engineering approach to future development, which standard has been approved by at least two-thirds of the members of the Subdivision eligible to vote thereon.
3. Adoptive Standard, which is adopted in whole or in part from the standards of another organization, either domestic, regional, or international.

(Standardization Policies and Procedures, pp. 7 & 16)

Authorized Engineering Information

Authorized Engineering Information consists of explanatory data and other engineering information of an informative character not falling within the classification of NEMA Standard or Suggested Standard for Future Design, which standard has been approved by at least two-thirds of the members of the Subdivision eligible to vote on the standard.

(Standardization Policies and Procedures, pp. 7 & 16)

Official Standards Proposal

An Official Standards Proposal is an official draft of a proposed standard which is formally recommended to an outside organization(s) for consideration, comment, and/or approval, and which has been approved by at least 90 percent of the members of the Subdivision eligible to vote thereon.

(Standardization Policies and Procedures, pp. 7 & 16)

Identification of Status

Standards in NEMA Standards Publications are identified in the foreword or following each standard as "NEMA Standard" or "Suggested Standard for Future Design." These indicate the status of the standard. These words are followed by a date which indicates when the standard was adopted in its present form by the Association.

The material identified as "Authorized Engineering Information" and "Official Standards Proposal" is designated similarly.

Copyright National Electrical Manufacturers Association
Provided by IHS under license with NEMA
No reproduction or networking permitted without license from IHS
Not for Resale

Outdoor High Voltage Switches Voting Classification of the SWITCHGEAR SECTION of the NATIONAL ELECTRICAL MANUFACTURERS ASSOCIATION

MEMBER COMPANIES

A.B. Chance Company
Centralia, MO 65240

Cooper Power Systems
Olean, NY 14670

Kearney
Division of Kearney-National, Inc.
Atlanta, GA 30359

Power Controls, Inc.
Commerce, CA 90040

Powercon Corporation
Severn, MD 21144

The Pringle Electrical Manufacturing Company
Fort Washington, PA 19034

Siemens Energy & Automation, Inc.
Jackson, MS 39208

USCO Power Equipment Corporation
Birmingham, AL 35202

Westinghouse Electric Corporation
Pittsburgh, PA 15220

Copyright National Electrical Manufacturers Association
Provided by IHS under license with NEMA
No reproduction or networking permitted without license from IHS
Not for Resale