9009279 0004101 295

STANDARDS PUBLICATION / NO. SG 2-1981

nema

High-Voltage Fuses

NEMA

NATIONAL ELECTRICAL MANUFACTURERS ASSOCIATION ■ 2101 L STREET, N.W., WASHINGTON, D.C. 20037

Copyright National Electrical Manufacturers Association
Provided by IHS under license with NEMA
No reproduction or networking permitted without license from IHS
Not for Resale

TABLE OF CONTENTS

		Page
	FOREWORD	i
	SCOPE	ii
Section 40	Service Conditions and Definitions	1
Section 41	Design Tests	1
Section 42	Distribution and Fuse Links	1
Section 44	Distribution Oil Cutouts and Fuse Links	2
Section 45	Distribution Enclosed Single-Pole Air Switches	2
Section 46	Power Fuses and Fuse Disconnecting Switches	2
Section 46A	Current-Limiting Resistors for Use With Power Fuses	2
Section 47	Distribution Fuse Disconnecting Switches, Fuse Supports, and Current-Limiting Fuses	4
Section 48	Guide for Application, Operation, and Maintenance	4

• Section numbers 1 through 39 have not been assigned.

© 1982 by National Electrical Manufacturers Association

Copyright National Electrical Manufacturers Association
Provided by IHS under license with NEMA
No reproduction or networking permitted without license from IHS
Not for Resale

9009279 0004103 068

Foreword

This is one of six NEMA Standards Publications covering the range of low- to high-voltage switchgear products. Such products are generally applied to utility and industrial use with a portion going to commercial applications. User and general interest input played a significant part in the development of the product requirements carried by this publication. It, as well as these other five NEMA Standards Publications, is not intended to stand alone for without exception:

1. It adopts by reference the appropriate American National Standards (approved by American National Standards Committee C37) as the main body of this NEMA publication.
2. It offers a vehicle for getting into print the proposed NEMA revisions of the pertinent C37 Standards, until such time as those revisions can be evaluated, approved, and published as a revision of the particular American National Standard.
3. It covers additional information about a product of specific interest to the manufacturing community, which the American National Standards Committee does not include in its scope.

Within this NEMA publication, therefore, the main focus is on American National Standards and the consensus method of standards approval used by ANSI.

Switchgear standards are, for the most part, developed through the combined and separate efforts of the Institute of Electrical and Electronics Engineers, the Association of Edison Illuminating Companies, and NEMA. American National Standards Committee C37 serves as the administrator through which are channeled all switchgear proposals intended for eventual publication as American National Standards. It is within these organizations that the principal manufacturer-user exchange is accomplished. This exposes product requirements to those people having the direct responsibility for the use, design, application, maintenance, and acceptance of the products and thus assures a most objective and critical review within the voluntary standards program. The NEMA Standards Publications in this series include:

SG 2-1981	High-Voltage Fuses
SG 3-1980	Low-Voltage Power Circuit Breakers
SG 4-1975 (R 1980)	Alternating-Current High-Voltage Circuit Breakers
SG 5-1980	Power Switchgear Assemblies
SG 6-1974 (R 1979)	Power Switching Equipment
SG 13-1977	Automatic Circuit Reclosers, Automatic Line Sectionalizers and Oil-Filled Capacitor Switches for Alternating-Current Systems

These standards are periodically reviewed by the High-Voltage Fuse Voting Classification of the Switchgear Section of NEMA for any revisions necessary to keep them up to date with advancing technology. Proposed or recommended revisions should be submitted to:

Manager, Engineering Department
National Electrical Manufacturers Association
2101 L Street, N.W.
Washington, D.C. 20037

Copyright National Electrical Manufacturers Association
Provided by IHS under license with NEMA
No reproduction or networking permitted without license from IHS
Not for Resale

Scope

This standard applies to high-voltage fuses (above 600 volts), distribution enclosed single-pole air switches, fuse disconnecting switches, and accessories for alternating-current distribution systems, as follows:

1. Enclosed, open, and open-link types of distribution cutouts and fuses.
2. Distribution current limiting fuses.
3. Distribution oil cutouts.
4. Distribution enclosed single-pole air switches.
5. Power fuses, including current-limiting types.
6. Outdoor and indoor fuse disconnecting switches.
7. Fuse supports, fuse mountings, fuse hooks, fuse tongs, and fuse links, all of the type used exclusively with products listed in 1 through 6 above.
8. Removable switch blades for products listed in 1 through 3 above.
9. Enclosed single-pole distribution air switches.

ANSI STANDARDS

The following ANSI Standards are referenced in this publication. Copies are available directly from the American National Standards Institute, 1430 Broadway, New York, N.Y. 10018.

C37.40-1981 Service Conditions and Definitions for High-Voltage Fuses, Distribution Enclosed Single-Pole Air Switches, Fuse Disconnecting Switches and Accessories

C37.41-1981 Design Tests for Distribution Cutouts and Fuse Links, Secondary Fuses, Distribution Enclosed Single-Pole Air Switches, Power Fuses, Fuse Disconnecting Switches, and Accessories

C37.42-1981 Specifications for Distribution Cutouts and Fuse Links

C37.44-1981 Specifications for Distribution Oil Cutouts and Fuse Links

C37.45-1981 Specifications for Distribution Enclosed Single-Pole Air Switches

C37.46-1981 Specifications for Power Fuses and Fuse Disconnecting Switches

C37.47-1981 Specifications for Distribution Fuse Disconnecting Switches, Fuse Supports, and Current-Limiting Fuses

C37.48-1969 Guide for Application, Operation and Maintenance of Distribution Cutouts and Fuse Links, Secondary Fuses, Distribution Enclosed Single-Pole Air Switches, Power Fuses, Fuse Disconnecting Switches and Accessories

Copyright National Electrical Manufacturers Association
Provided by IHS under license with NEMA
No reproduction or networking permitted without license from IHS
Not for Resale

9009279 0004105 930

HIGH-VOLTAGE FUSES

Section 40

SERVICE CONDITIONS AND DEFINITIONS

40.100 APPLICABLE ANSI STANDARD

American National Standard C37.40-1981 has been approved by NEMA for inclusion in Section 40, with the addition of the definitions shown below.

40-3.11.12 Current-Limiting Resistor

A current-limiting resistor is a resistor which is inserted in a circuit to limit the flow of short-circuit current to some predetermined value under a specified condition.

40-3.11.13 Current-Limiting Resistor Assembly

A current-limiting resistor assembly includes a base, insulators and a resistor unit or units. It may or may not include fittings for supporting a fuse.

40-3.11.14 Current-Limiting Resistor Unit

A current-limiting resistor unit is an assembly consisting of a resistor core, resistor element, resistor housing, and all necessary parts for making mechanical and electrical connections.

40-3.11.15 Resistor Core

The resistor core of a current-limiting resistor is the insulating member on which the resistor element is supported.

40-3.11.16 Resistor Housing

The resistor housing of a current-limiting resistor is an enclosing member which surrounds the resistor element and the core.

NEMA Standard 11-12-1981.

Section 41

DESIGN TESTS

41.100 APPLICABLE ANSI STANDARD

The following American National Standard has been approved as NEMA Standard and should be inserted in this section: C37.42-1981.

NEMA Standard 11-12-1981.

Section 42

DISTRIBUTION CUTOUTS AND FUSE LINKS

42.100 APPLICABLE ANSI STANDARD

The following American National Standard has been approved as NEMA Standard and should be inserted in this section: C37.42-1981.

NEMA Standard 11-12-1981.

Copyright National Electrical Manufacturers Association
Provided by IHS under license with NEMA
No reproduction or networking permitted without license from IHS
Not for Resale

Section 44

DISTRIBUTION OIL CUTOUTS AND FUSE LINKS

44.100 APPLICABLE ANSI STANDARD

The following American National Standard has been approved as NEMA Standard and should be inserted in this section: C37.44-1981.

NEMA Standard 11-12-1981.

Section 45

DISTRIBUTION ENCLOSED SINGLE-POLE AIR SWITCHES

45.100 APPLICABLE ANSI STANDARD

The following American National Standard has been approved as NEMA Standard and should be inserted in this section: C37.45-1981.

NEMA Standard 11-12-1981.

Section 46

POWER FUSES AND FUSE DISCONNECTING SWITCHES

46.100 APPLICABLE ANSI STANDARD

The following American National Standard has been approved as NEMA Standard and should be inserted in this section: C37.46-1969.

NEMA Standard 11-12-1981.

Section 46A

CURRENT-LIMITING RESISTORS FOR USE WITH POWER FUSES

46A-200 RATING STANDARDS

46A.201 Rating Information

A. The rating of a current-limiting resistor unit shall include:

1. Continuous current rating.
2. Resistance of the unit.
3. Rms voltage which it is designed to withstand across its terminals during short-circuit conditions.
4. Rms system voltage.
5. System frequency.
6. Length of time in seconds during which it will carry the rms current obtained with rated voltage (see item 3) applied across its terminals.

B. The rating of a current-limiting resistor assembly shall include:

1. Continuous current rating.
2. Rms system voltage.
3. System frequency.
4. Total resistance of the current-limiting resistor unit or units.

NEMA Standard 4-22-1948.

Copyright National Electrical Manufacturers Association
Provided by IHS under license with NEMA
No reproduction or networking permitted without license from IHS
Not for Resale

46A.202 Basis of Continuous Current Rating

The continuous current rating shall be the rms amperes which current-limiting resistors are capable of carrying continuously with a temperature rise of 30 °C on the terminals above an ambient of 40 °C or 55 °C as specified in SG 2-46A.401, with the exception of the resistor element, when tested under the usual service conditions specified in C37.40-2.1 and SG 2-46A.401.

NEMA Standard 8-26-1948, revised 1-22-1954.

46A.203 Continuous Current Rating

The continuous current ratings of current-limiting resistors shall be: 0.5, 1, 2, 3 and 5 amperes.

NEMA Standard 4-22-1948.

46A.204 Basis of Voltage Rating

A. Current-Limiting Resistor Units

The voltage rating shall be the rms volts at which current-limiting resistor units are designed to be operated, based on their ability to meet the test conditions described in SG 2-46A.301.

B. Current-Limiting Resistor Assemblies

The voltage rating shall be the rms volts which current-limiting resistor assemblies are capable of withstanding, based on the dielectric test voltages specified in C37.41-1981. The dielectric tests shall be made between live parts with the resistor unit or units removed and between live parts and base of the completely assembled current-limiting resistor assembly.

NEMA Standard 8-26-1948.

46A.205 Nominal Voltage Ratings

The nominal voltage ratings of current-limiting resistor units and assemblies shall be:

2.4 kV	14.4 kV	46.0 kV	115.0 kV
4.8 kV	23.0 kV	69.0 kV	138.0 kV
7.2 kV	34.5 kV	92.0 kV*	161.0 kV

NEMA Standard 4-22-1948, revised 9-17-1958; 1-26-1960.

46A.206 Basis of Resistance Rating

The resistance rating shall be the resistance in ohms of the current-limiting resistor, based on direct-current resistance measurements made at 20 °C to 30 °C.

NEMA Standard 4-22-1948.

46A.207 Basis of Short-time Rating

The short-time ratings shall be the length of time in seconds during which the current-limiting resistor will carry the rms current obtained by placing rated voltage across the resistor, without deterioration of any component material.

NEMA Standard 4-22-1948.

46A-300 TESTING STANDARDS—DESIGN TESTS

46A.301 Short-Time Rating Tests

Tests to establish the short-time rating shall be made immediately after the current-limiting resistor has been carrying 150 percent of rated current for at least 2 hours in an ambient temperature of 20 °C to 30 °C.

NEMA Standard 4-22-1948.

46A.302 Radio Influence Tests

Current-limiting resistors shall meet the requirements of C37.41-1981 and C37.46-1981.

NEMA Standard 11-12-1981.

46A-400 APPLICATION STANDARDS

46A.401 Usual Service Conditions

In addition to the usual service conditions specified in C37.40-1981, current-limiting resistors shall be suitable for operation at their standard rating:

1. Where the temperature of the cooling medium does not exceed 40 °C if the unit is designed so that, when carrying rated current, the temperature rise at the terminals will not exceed 30 °C if conducting parts, excluding the resistor element, are of copper or similar material, and so that insulation material will not be subjected to temperatures exceeding the limits for the class of insulation involved.
2. Where the temperature of the cooling medium does not exceed 55 °C if the unit is designed so that, when carrying rated current continuously, the temperatures of insulation material and of terminal parts will not exceed the limits specified in item 1 and, in addition, all contacts are silver-surfaced or equivalent, and all joints, including terminals, are either:
   a. Separately held mechanically and soldered or silver-surfaced, or
   b. Brazed, welded or silver soldered.

NEMA Standard 8-26-1948, revised 11-12-1981.

46A.402 Resistors in Primary Circuits of Potential Transformers and Auxiliary Power Transformers

Where fuses are used in the primary of a voltage transformer, resistors shall be used in series with the fuses when the interrupting rating of the latter is less than the short-circuit current which the system

* There are no insulator units rated 92 kV. Therefore, insulators of the next higher voltage class shall be used.

Copyright National Electrical Manufacturers Association
Provided by IHS under license with NEMA
No reproduction or networking permitted without license from IHS
Not for Resale

can deliver to the fuses. It is recognized that it may be practical to use a resistor which will reduce the fuse duty to a value well within its interrupting rating.

NEMA Standard 4-22-1948.

46A.403 Resistor and Fuse in Combination

In applying a resistor and fuse combination, the short-time rating of the resistor unit (see par. A.6 of SG 2-46A.201) must be in excess of the clearing time of the associated fuse (C37.40-3.4.7.2).

NEMA Standard 4-22-1948.

46A- 500 MANUFACTURING STANDARDS

46A.501 Nameplate Marking

A. The following minimum amount of information shall be placed on the current-limiting resistor unit:

1. Manufacturer's name or trademark (or logo).
2. Manufacturer's type or identification number.
3. Continuous current rating in amperes.
4. Resistor rating in ohms.
5. Nominal voltage rating in rms volts which the resistor unit is designed to withstand across its terminals.
6. Nominal voltage rating in system rms volts.
7. System frequency rating in cycles per second.
8. Short-time rating in seconds.

B. The following minimum amount of information shall be placed on the current-limiting resistor assembly:

1. Manufacturer's name or trademark (or logo).
2. Manufacturer's type or identification number.
3. Continuous current rating of resistor unit or units in rms amperes.
4. Nominal voltage rating in rms volts.
5. System frequency rating in cycles per second.
6. Total resistance of current-limiting resistor unit or units in ohms.
7. Full-wave impulse withstand voltage rating.

NEMA Standard 4-22-1948, revised 7-21-1954; 11-12-1981.

46A.502 Shipment of Current-Limiting Resistors

Current-limiting resistors shall be shipped completely assembled with insulators if the supports are rated 46kV or below. The insulators for supports rated above 46 kV shall be shipped separately.

NEMA Standard 1-22-1954.

Section 47

DISTRIBUTION FUSE DISCONNECTING SWITCHES, FUSE SUPPORTS, AND CURRENT-LIMITING FUSES

47.100 APPLICABLE ANSI STANDARD

The following American National Standard has been approved as NEMA Standard and should be inserted in this section: C37.47-1969.

NEMA Standard 11-12-1981.

Section 48

GUIDE FOR APPLICATION, OPERATION, AND MAINTENANCE

48.100 APPLICABLE ANSI STANDARD

American National Standard Guide C37.48-1969 has been approved by NEMA for inclusion in Section 48, with the revisions shown below.

48-3 Application, 48-4 Operation and 48-5 Maintenance—These sections should be replaced in their entirety by the correspondingly numbered sections in this NEMA Standards Publication.

Authorized Engineering Information 9-8-1976, revised 11-12-1981.

48-3 Application

48-3.1 Clearance for Vented Fuses (Distribution Cutouts and Power Fuses)

Vented fuses should be provided with good clearance in the direction or directions in which they are vented, and facilities should be provided for operating them without requiring the operator to approach the vented end.

Copyright National Electrical Manufacturers Association
Provided by IHS under license with NEMA
No reproduction or networking permitted without license from IHS
Not for Resale

48-3.1.1 NOISE LEVEL

The height, location, and exhaust control of vented fuses should be sufficient to keep the noise level to a minimum at any location normally occupied by personnel.

48-3.2 BASIS FOR SELECTION OF RATED VOLTAGE OF DISTRIBUTION CUTOUTS

The selection of the rated voltage of distribution cutouts should be based on the following considerations:

1. The maximum normal-frequency recovery voltage (as defined in 40-3.10.3.3.1 of American National Standard C37.40-1969) impressed across the cutout terminals should not exceed the rated maximum voltage of the cutout. Specific applications are:

a. For single-phase applications [from phase-to-neutral taps off of a multiphase system with effectively (solidly) grounded neutral (see Figure 48-1a)], the rated voltage of the cutout may be on the basis of the single-phase voltage (that is, the phase-to-neutral voltage) provided the cutout is so located that phase-to-phase voltage cannot be impressed on the cutout.

b. For all other single-phase (see Figures 48-1b and 48-1c) or multiphase (see Figure 48-1d) applications, the rated voltage of the cutout should be on the basis of full phase-to-phase circuit voltage. A phase-to-phase fault not involving ground can impress full phase-to-phase voltage on the first cutout to operate, even though two or more cutouts are available in the circuit to clear the fault. This is caused by such conditions as unbalanced loading on the phases or a very slight differential between melting and clearing times on two identically rated fuse links.

2. The basic impulse insulation level of the cutout is coordinated with the line-to-ground insulation of the line and the insulation of other connected apparatus. Consideration should also be given to the service conditions given in 40-2 of American National Standard C37.40-1969 as they apply to dielectric strength.

48.3.3 GUIDE FOR SELECTION OF RATED VOLTAGE OF DISTRIBUTION CUTOUTS

Table 48-1 provides a guide for the selection of the rated voltage of the cutout. It is based on the considerations given in 48-3.2, application under usual service conditions in accordance with 40-2.1 of American National Standard C37.40-1969, and the system voltages within the tolerable zone (Range 'B') of Table 48-1, Standard Nominal System Voltages, in American National Standard C84.1-1970.

48-3.4 SELECTION OF RATED CONTINUOUS CURRENT (FUSE LINKS FOR DISTRIBUTION CUTOUTS AND POWER FUSES)

The rated continuous current of distribution fuse links or power fuse units or fuse links should be selected with due regard to:

1. Normal and possible overload currents of the circuit, including sustained harmonics.

2. Transient currents of the circuit, such as transformer magnetizing inrush current, motor starting current, and capacitor inrush current.

3. Coordination with other protective devices.

48-3.5 COORDINATION FACTOR FOR OPERATING VARIABLES

48-3.5.1 DISTRIBUTION FUSE LINKS IN ENCLOSED, OPEN, OPEN-LINK AND OIL-FUSE CUTOUTS

Coordination factors for operating variables are generally published by each manufacturer for use with its fuse links. However, in the absence of such data, the following general procedures can be used:

In comparing time-current curves for coordination purposes, a value of 75 percent of the minimum melting time of the protected fuse link should be used to make allowance for most operating variables, such as preheating of the fuse link by load and normal variations in ambient temperature.

48-3.5.2 HOW TO USE MELTING AND TOTAL CLEARING TIME-CURRENT CURVES TO APPLY THE COORDINATION FACTOR

Coordination is achieved between the protected link and the protecting link when, in response to a fault current, the protecting link melts and interrupts the flow of fault current before the protected link melts or is damaged by that fault current. The maximum level at which coordination can be achieved is determined by the intersection of the minimum melting time-current curve of the protected link, suitably adjusted for coordinating factors, and the total clearing time-current curve of the protecting link. Normally, this maximum value should be greater than the available fault current at the location of the protecting link.

In accordance with 48-3.5.1, the 75 percent value is used in the absence of coordinating data furnished by the manufacturer, and a comparison of time-current data can be made in the following manner:

Seventy-five percent of the melting time can be obtained in comparing curves for any apparatus for which the standard curve sheets as specified in 41-12.3.1 of American National Standard C37.41-1969

Copyright National Electrical Manufacturers Association
Provided by IHS under license with NEMA
No reproduction or networking permitted without license from IHS
Not for Resale

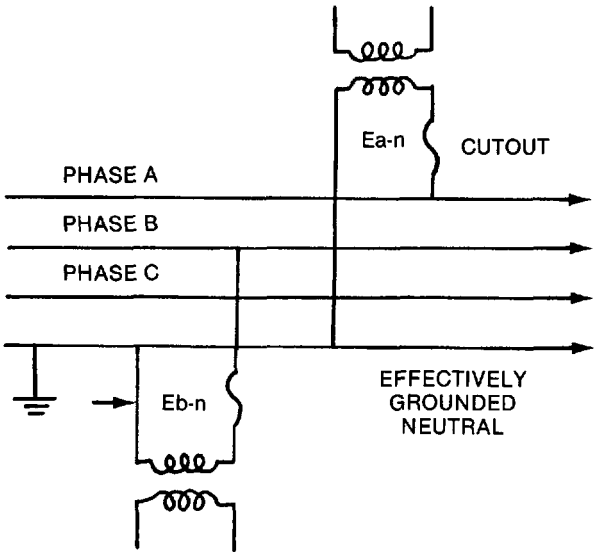

Ea-n = voltage between Phase A and neutral
Eb-n = voltage between Phase B and neutral

Figure 48-1a

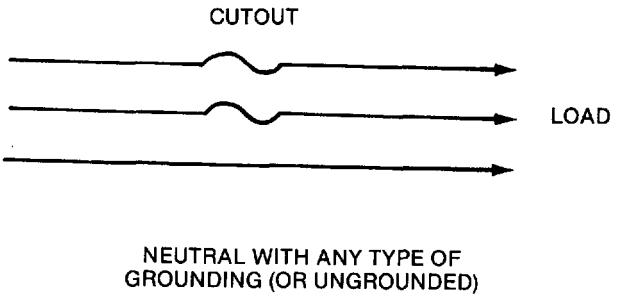

Figure 48-1b

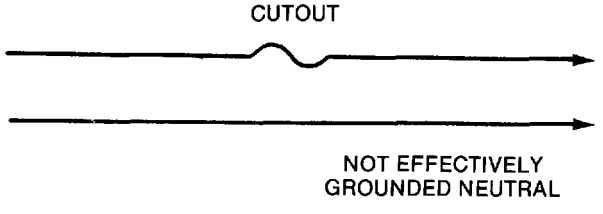

Figure 48-1c

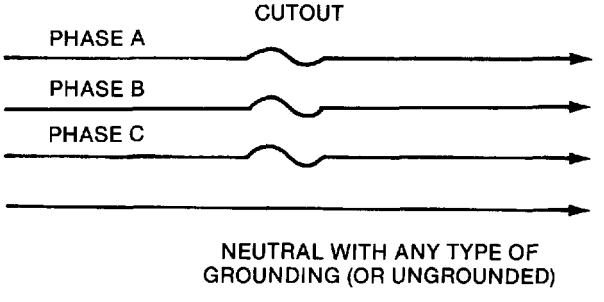

Figure 48-1d

Figure 48-1
LOCATION OF DISTRIBUTION CUTOUTS

are available by the following procedure. Place the curve sheets so the current scales line up exactly and so the 1-second line on the sheet for the melting time-current curve coincides with the 0.75-second line on the sheet for the total clearing time-current curves for the protecting device (or so 4 on the melting time coincides with 3 on the total clear time). Compare the curves on the two sheets, reading the time values on the total clearing time scale.

48-3.5.3 Coordinating Factor for Operating Variables for Power Fuses

Factors for operating variables applicable to power fuses are generally published by each manufacturer for each power fuse type. No single coordinating factor can be established because of the diversity of constructions and conditions.

Operating variables to be considered in determining correction factors to the manufacturer's published time-current characteristics of power fuses include:

1. Ambient temperature
2. Short-time overloads
3. Preloading.

48-3.6 Marking of Spare Fuses and Parts

If several types and ratings of fuses are used in a given location, spare fuse units should be suitably marked, coded or indexed to show the mountings, circuits or equipment with which they are to be used to prevent interchanging links improperly and thus to minimize the likelihood of improper application.

Copyright National Electrical Manufacturers Association
Provided by IHS under license with NEMA
No reproduction or networking permitted without license from IHS
Not for Resale

Table 48-1

GUIDE FOR SELECTION OF RATED VOLTAGE OF DISTRIBUTION CUTOUTS

Nominal System Voltage	Maximum Voltage Range 'B' System Voltage	Recommended Cutout Ratings: Phase-to-neutral on Effectively (Solidly) Grounded Applications (See Fig. 48-1a) — Rated Maximum Voltage, Volts	Recommended Cutout Ratings: All Other Single-phase (See Figs. 48-1b and 1c) or Multi-phase (See Fig. 48-1d) Applications — Rated Maximum Voltage, Volts
2400	2540	...	5200
4160Y/2400	4400Y/2540	5200	5200
4800	5080	...	5200
6900	7260	...	7800
8320Y/4800	8800Y/5080	5200	15000
12000Y/6930	12700Y/7330	7800	15000
12470Y/7200	13200Y/7620	7800	15000
13200Y/7620	13970Y/8070	15000	15000
13800	14520	15000	15000
24940Y/14400	26400Y/15240	18000	27000
34500Y/19920	36510Y/21080	27000	38000

48-4 OPERATION

48-4.1 Disconnecting or Connecting Operation

Any of the devices which are used to disconnect or close an energized circuit should be operated in a rapid, positive manner since the success of this function may be dependent upon the use of proper procedures and techniques as established by the manufacturer.

48-4.2 Locking or Latching of Fuses, Blades or Links in Closed Position

Special care should be taken to see that the fuse, blade, or link is securely locked, latched, or held fast in the closed position as recommended by the manufacturer. The fuse carrier assembly of distribution oil fuse cutouts or other devices applied in sealed enclosures should be locked and sealed; therefore, the sealing gaskets should be maintained in good condition for satisfactory operation.

48-4.3 Replacement of Fuses

48-4.3.1 Fuses Subject to Partial Melting or Deterioration

There are fuse constructions which are subject to partial melting or damage by current that is not of sufficient magnitude and duration to cause total melting of the fuse. For such fuses it is important that the following precautions be observed:

1. In two- or three-phase applications, it is advisable to replace the fuse units (or fuse links) in all phases when the fuses in one or more phases are found to have blown or to follow carefully the manufacturer's instruction for determining the suitability of the fuse(s) for continued service.
2. In applications where these fuses are used in series with other fuses or interrupting devices in the same phase in such a manner that their melting and/or clearing curves cross one another, it is advisable after an operation to follow carefully the manufacturer's instructions for determining the suitability of the fuse(s) for continued service.

48-4.3.2 Reenergization After Fuses Have Operated

It is advisable to locate and correct the situation which caused the fuse to operate before reenergizing. The operator should be aware that a potential hazard may exist if the circuit is reenergized with the fault condition still present.

48-4.4 Operation of Energized Fuses

48-4.4.1 When a fuse or fused equipment not equipped with a load-break device is used to energize a circuit following fuse replacement, it should not be opened unless the fuse has blown.

48-4.4.2 When a fuse or fused equipment with a load-break device is used to energize a circuit following fuse replacement, it should not be immediately reopened. The safe time delay before reopening will vary considerably, depending upon

Copyright National Electrical Manufacturers Association
Provided by IHS under license with NEMA
No reproduction or networking permitted without license from IHS
Not for Resale

the continuous current rating of the fuse, but should be adequate to allow the fuse to interrupt any following current which might exceed the loadbreak rating of the device. For large size fuse links above 100 amperes, this time delay could be as long as 10 minutes.

48-4.5 Open Fuse Holder

Outdoor fuses should not be left hanging in the open position for an extended period of time. If they are left this way, they should be inspected to insure there is no water damage and that no warpage has occurred prior to reclosing into the circuit.

48-4.6 Use of Solid Cap on Expendable Cap Cutouts

Installation of a solid cap on an expendable cap cutout results in a reduction of the expendable cap cutout interrupting capability. The manufacturer's instructions as to the reduction in rating should be consulted.

48-4.7 Storing Spare Fuse Units and Replaceable Parts

Spare fuse units and replaceable parts of fuse units should be stored in such a manner that they will not be damaged and so that they will be readily available when needed.

48-4.8 Replacing Fuses on Capacitor Installations

Fuses used on capacitors should not be removed or replaced by hand unless due precautions are taken beforehand to discharge the capacitors.

Capacitors used in power applications have a discharge resistor to reduce the voltage to a specified value in a specified time after being disconnected. Sole reliance on this feature for safety is not advisable.

The entire capacitor bank should be disconnected and grounded while replacing the fuses unless the fuse link and/or its mounting can be removed safely and completely from the circuit using hot line tools.

48-5 MAINTENANCE

48-5.1 Inspection of Air-Insulated Fused or Switching Devices

A fused or switching device consists of many parts, some current carrying and some non-current carrying, which are subject to varying degrees of deterioration dependent upon the atmospheric conditions.

The frequency of inspection will necessarily be a function of the conditions at a given fuse location and should be determined by the user.

The following points require special consideration:

1. Be sure that the fuse is disconnected from all power sources before servicing.
2. Inspect insulators for breaks, cracks, or burns. Clean the insulators where abnormal conditions such as salt deposits, cement dust, or acid fumes prevail to avoid flashover as a result of the accumulation of foreign substances on their surfaces.
3. Inspect contact surfaces for pitting, burning, alignment, and pressure. Badly pitted or burned contacts should be replaced.
4. Examine the fuse unit or fuse tube and renewable element for corrosion of the fuse element or connecting conductors, excessive erosion of the inside of the fuse tubes, discharge (tracking) and dirt on the outside of the fuse tube, and improper assembly that may prevent proper operation. Replace fuse tubes or units showing signs of deterioration.
5. See that bolts, nuts, washers, pins, and terminal connectors are in place and in good condition. Check lock or latch.
6. Refinish fuse tubes made of organic (Class 105 °C) material as required and specified by the manufacturer.

48-5.1.1 Periodic Inspection of Fuse Links in Distribution Cutouts

Fuse links in distribution cutouts may require periodic replacement since corrosion of the lower terminal of the fuse link (generally a flexible cable) at the lower open end of the fuse holder may cause breakage or melting at this point rather than at the current-responsive element. Link-break cutouts are more susceptible to this problem because of the mechanical strain placed upon the fuse link by the link-break mechanism.

Copyright National Electrical Manufacturers Association
Provided by IHS under license with NEMA
No reproduction or networking permitted without license from IHS
Not for Resale

48-5.2 Inspection of Distribution Oil Fuse Cutouts

In addition to 48-5.1, items 1, 2, 3, and 5, the following points should be considered:

1. A sample of the insulating oil should be tested for dielectric breakdown strength periodically even though no overload interruptions have been experienced. Oil in cutouts which experience regular load-break or fuse interruption duty should be tested on a more frequent basis.

2. The fuse carriers of nonvented distribution oil fuse cutouts generally incorporate insulating materials which may be damaged dielectrically by excessive exposure to moisture or humid atmosphere. The cutout should be kept sealed or the components and oil suitably protected from the contaminating exposure.

3. The fuse elements of these cutouts are generally not interchangeable and any substitution for the manufacturer's fuses may seriously affect the interrupting characteristics of the devices.

4. The cutouts should be examined for any evidence of oil leakage and to ascertain that the prescribed oil level is maintained.

5. Moveable bearings or gasket surfaces and yoke compression or interlocking features should be checked for satisfactory operation.

Copyright National Electrical Manufacturers Association
Provided by IHS under license with NEMA
No reproduction or networking permitted without license from IHS

Not for Resale

9009279 0004114 943

NEMA STANDARDIZATION

The purpose of NEMA Standards, their classification and status are set forth in certain clauses of the NEMA Bylaws, which are quoted below:

Purpose of Standards

National Electrical Manufacturers Association Standards are adopted in the public interest and are designed to eliminate misunderstandings between the manufacturer and the purchaser and to assist the purchaser in selecting and obtaining the proper product for its particular need. Existence of a National Electrical Manufacturers Association Standard does not in any respect preclude any member or nonmember from manufacturing or selling products not conforming to the standard.

(Bylaw—Art. V, Sec. 1)

Definition of a Standard

A standard of the National Electrical Manufacturers Association defines a product, process or procedure with reference to one or more of the following: nomenclature, composition, construction, dimensions, tolerances, safety, operating characteristics, performance, rating, testing, and the service for which they are designed.

(Bylaw—Art. V, Sec. 2, Subsection A)

Dimensions

Where dimensions are given for interchangeability purposes, alternate dimensions satisfying the other provisions of the standards publication may be capable of otherwise equivalent performance.

(NEMA Policy Memorandum 84-2, dated June 7, 1984)

Classes of Standards

National Electrical Manufacturers Association Standards are of two classes:

1. NEMA Standard, which relates to a product commercially standardized and subject to repetitive manufacture, which standard has been approved by at least 90 percent of the members of the Subdivision eligible to vote thereon;
2. Suggested Standard for Future Design, which may not have been regularly applied to a commercial product, but which suggests a sound engineering approach to future development, which standard has been approved by at least two-thirds of the members of the Subdivision eligible to vote thereon.

(Bylaw—Art. V, Sec. 2, Subsection B)

Authorized Engineering Information

Authorized Engineering Information consists of explanatory data and other engineering information of an informative character not falling within the classification of NEMA Standard or Suggested Standard for Future Design.

(Bylaw—Art. V, Sec. 6, 1st Sentence)

Official Standards Proposal

An Official Standards Proposal is an official draft of a proposed standard which is formally recommended to an outside organization(s) for consideration, comment and/or approval.

(Bylaw—Art. V, Sec. 4, Subsection A)

Identification of Status

Standards in NEMA Standards Publications are identified in the foreword or following each standard as "NEMA Standard" or "Suggested Standard for Future Design." These indicate the status of the standard. These words are followed by a date which indicates when the standard was adopted in its present form by the Association.

The material identified as "Authorized Engineering Information" and "Official Standards Proposal" is designated similarly.

Copyright National Electrical Manufacturers Association
Provided by IHS under license with NEMA
No reproduction or networking permitted without license from IHS
Not for Resale

9009279 0004115 88T

HIGH-VOLTAGE GROUP
OF THE
SWITCHGEAR SECTION
OF THE
NATIONAL ELECTRICAL MANUFACTURERS ASSOCIATION

MEMBER COMPANIES

Brown-Boveri Electric, Inc.
Spring House, PA 19477

A. B. Chance Company
Centralia, MO 65240

Nelson Electric, A Unit of
General Signal Corporation
Tulsa, OK 74101

Gould, Incorporated
Electric Fuse Division
Newburyport, MA 01950

G & W Electric Specialty Company
Blue Island, IL 60406

Joslyn Manufacturing & Supply Co.
Chicago, IL 60609

Kearney, Division of
Kearney-National, Inc.
Atlanta, GA 30359

McGraw-Edison Company
Olean, NY 14760

Siemens-Allis, Inc.
Wichita Falls, TX 76307

Westinghouse Electric Corporation
East Pittsburgh, PA 15112

Printed in U.S.A.

Copyright National Electrical Manufacturers Association
Provided by IHS under license with NEMA
No reproduction or networking permitted without license from IHS
Not for Resale