NEMA STANDARDS PUBLICATION NO. SG 2

nema

High Voltage Fuses

NEMA

NATIONAL ELECTRICAL MANUFACTURERS ASSOCIATION ■ 2101 L STREET, N.W., WASHINGTON, D.C. 20037

Copyright National Electrical Manufacturers Association
Provided by IHS under license with NEMA
No reproduction or networking permitted without license from IHS
Not for Resale

NEMA Standards Publication No. SG 2-1993

HIGH VOLTAGE FUSES
Reaffirmed with Revisions

Published by

National Electrical Manufacturers Association
2101 L Street, N.W.
Washington, DC 20037

©1994 by National Electrical Manufacturers Association

Copyright National Electrical Manufacturers Association
Provided by IHS under license with NEMA
No reproduction or networking permitted without license from IHS

Not for Resale

TABLE OF CONTENTS

		Page
	FOREWORD	i
	SCOPE	ii
Section 1	REFERENCED STANDARDS	1
Section 40	SERVICE CONDITIONS & DEFINITIONS	2
Section 41	DESIGN TESTS	3
Section 42	DISTRIBUTION CUTOUTS AND FUSE LINKS	18
Section 44	DISTRIBUTION OIL CUTOUTS AND FUSE LINKS	18
Section 45	DISTRIBUTION ENCLOSED SINGLE-POLE AIR SWITCHES	18
Section 46	POWER FUSES AND FUSE DISCONNECTING SWITCHES	18
Section 46A	CURRENT-LIMITING RESISTORS FOR USE WITH POWER FUSES	19
Section 47	DISTRIBUTION FUSE DISCONNECTING SWITCHES, FUSE SUPPORTS, AND CURRENT-LIMITING FUSES	21
Section 48	GUIDE FOR APPLICATION, OPERATION, AND MAINTENANCE	22
Section 48A	GUIDE FOR APPLICATION OF CURRENT-LIMITING FUSES IN ENCLOSURES	31
Appendix A	Recommended Methods for Determining the Value of a Sinusoidal Current Wave and a Normal-Frequency Recovery Voltage	33
Appendix B	Recommended Method of Determining the Equivalent Steady-State RMS Current for Plotting Time-Current Curves	37
Appendix C	Fault Current Calculation	38
Appendix D	Transient Recovery Voltage Parameters	39

Copyright National Electrical Manufacturers Association
Provided by IHS under license with NEMA
No reproduction or networking permitted without license from IHS
Not for Resale

Foreword

This is one of six NEMA Standards Publications covering the range of low- to high-voltage switchgear products. Such products are generally applied to utility and industrial use with a portion going to commercial applications. User and general interest input played a significant part in the development of the product requirements carried by this publication. It, as well as these other five NEMA Standards Publications, is not intended to stand alone for without exception:

1. It adopts by reference the appropriate American National Standards (approved by Accredited National Standards Committee C37) as the main body of this NEMA Publication.
2. It offers a vehicle for getting into print the proposed NEMA revisions of the pertinent C37 Standards, until such time as those revisions can be evaluated, approved, and published as a revision of the particular American National Standard.
3. It covers additional information about a product of specific interest to the manufacturing community, which the American National Standards Committee does not include in its scope.

Within this NEMA Publication, therefore, the main focus is on American National Standards and the concensus method of standards approval used by ANSI.

Switchgear standards are, for the most part, developed through the combined and separate efforts of the Institute of Electrical and Electronics Engineers, the Association of Edison Illuminating Companies, EEI, and NEMA. Accredited National Standards Committee C37 serves as the administrator through which are channeled all switchgear proposals intended for eventual publication as American National Standards. It is within these organizations that the principal manufacturer-user exchange is accomplished. This exposes product requirements to those people having the direct responsibility for the use, design, application, maintenance, and acceptance of the products and thus assures a most objective and critical review within the voluntary standards program. The NEMA Standards Publications in this series include:

SG 2-1986	*High-Voltage Fuses*
SG 3-1981	*Low-Voltage Power Circuit Breakers*
SG 5-1981	*Power Switchgear Assemblies*
SG 13-1983	*Automatic Circuit Reclosers, Automatic Line Sectionalizers and Oil-Filled Capacitor Switches for Alternating-Current Systems*

These standards are periodically reviewed by the High-Voltage Fuse Voting Classification of the Switchgear Section of NEMA for any revisions necessary to keep them up to date with advancing technology. Inquiries, comments, and proposed or recommended revisions should be submitted to the concerned NEMA product subdivision by contacting:

Manager, Engineering Department
National Electrical Manufacturers Association
2101 L Street, N.W.
Washington, DC 20037

Copyright National Electrical Manufacturers Association
Provided by IHS under license with NEMA
No reproduction or networking permitted without license from IHS
Not for Resale

Scope

This standard applies to high-voltage fuses (above 1000 volts)*, distribution enclosed single-pole air switches, fuse disconnecting switches, and accessories for alternating-current distribution systems, as follows:

1. Enclosed, open, and open-link types of distribution cutouts and fuses.
2. Distribution current limiting fuses.
3. Distribution oil cutouts.
4. Distribution enclosed single-pole air switches.
5. Power fuses, including current-limiting types.
6. Outdoor and indoor fuse disconnecting switches.
7. Fuse supports, fuse mountings, fuse hooks, fuse tongs, and fuse links, all of the type used exclusively with products listed in 1 through 6 above.
8. Removable switch blades for products listed in 1 through 3 above.
9. Enclosed single-pole distribution air switches.

* Included are fuses rated 601 to 1000 volts which were designed and tested prior to 1985.

Copyright National Electrical Manufacturers Association
Provided by IHS under license with NEMA
No reproduction or networking permitted without license from IHS
Not for Resale

HIGH-VOLTAGE FUSES

Section 1
REFERENCED STANDARDS

The following ANSI standards are referenced in this publication. Copies are available directly from the sources indicated.

American National Standards Institute
11 West 42nd St.
New York, NY 10036

C37.05-1964 (R1976)	*Values of a Sinusoidal Current Wave and a Normal-Frequency Recovery Voltage for AC High-Voltage Circuit Breakers*
C35.3-1979	*Definitions for AC High-Voltage Circuit Breakers*
C37.40-1981 (R 1988) (IEEE)	*Service Conditions and Definitions for High-Voltage Fuses, Distributions Enclosed Single-Pole Air Switches, Fuse Disconnecting Switches and Accessories*
C37.41-1988 (IEEE)	*Design Tests for Distribution Cutouts and Fuse Links, Secondary Fuses, Distribution Enclosed Single-Pole Air Switches, Power Fuses, Fuse Disconnecting Switches, and Accessories*
C37.42-1989 (NEMA)	*Specifications for Distribution Cutouts and Fuse Links*
C37.44-1981 (R1987)	*Specifications for Distribution Oil Cutouts and Fuse Links*
C37-45.1981 (R1987)	*Specifications for Distribution Enclosed Single-Pole Air Switches*
C37.46-1981 (R1987)	*Specifications for Distribution Fuse Disconnecting Switches*
C37.47-1981 (R1988)	*Specifications for Distribution Fuse Disconnecting Switches, Fuse Supports, and Current-Limiting Fuses*
C37.48-1987 (IEEE)	*Guide for Application, Operation and Maintenance of Distribution Cutouts and Fuse Links, Secondary Fuses, Distribution Enclosed Single-Pole Air Switches, Power Fuses, Fuse Disconnecting Switches and Accessories*
C.55.1	*Shunt Capacitors*

American Society for Testing and Materials
1916 Race Street
Philadelphia, PA 19103

ASTM E498-73 (R 1980)	*Methods for Testing for Leaks Using the Mass Spectrometer Leak Detector or Residual Gas Analyzer in the Tracer Probe Mode*

Copyright National Electrical Manufacturers Association
Provided by IHS under license with NEMA
No reproduction or networking permitted without license from IHS
Not for Resale

Section 40

SERVICE CONDITIONS AND DEFINITIONS

40.1 APPLICABLE ANSI STANDARD

American National Standard C37.40-1981 has been approved by NEMA and shall be included in Section 40, with the addition of the definitions shown below.

NEMA Standard 8-20-1986.

40.2 DEFINITIONS*

Current-Limiting Resistor

A resistor inserted in an electric circuit to limit the flow of current to some predetermined value.

Current-Limiting Resistor Assembly

A current-limiting resistor assembly includes a base, insulators and a resistor unit or units. It may or may not include fittings for supporting a fuse.

Current-Limiting Resistor Unit

A current-limiting resistor unit is an assembly consisting of a resistor core, resistor element, resistor housing, and all necessary parts for making mechanical and electrical connections.

Resistor Core

The resistor core of a current-limiting resistor is the insulating member on which the resistor element is supported.

Resistor Housing

The resistor housing of a current-limiting resistor is an enclosing member which surrounds the resistor element and the core.

Slant-Voltage-Rated (Multiple-Voltage-Rated) Distribution Cutout

A distribution cutout intended primarily for application on three-phase solidly-grounded-neutral (multi-grounded) systems where prescribed conditions exist. [See Slant-Voltage (Multiple-Voltage) Ratings of a Distribution Cutout.]

Slant-Voltage (Multiple-Voltage) Ratings of a Distribution Cutout

A pair of maximum voltage ratings assigned to a distribution cutout intended primarily for application on three-phase solidly-grounded-neutral (multi-grounded) systems[1] where construction conditions are such that two cutouts will normally operate in series to clear phase-to-phase faults. In applying these cutouts, the system line-to-line voltage must be equal to or less than the maximum voltage rating to the right of the slant (/), and the system line-to-ground voltage must be equal to or less than the maximum voltage rating to the left of the slant (/).

For application in other systems and for more complete application guidance, refer to 48.8.1.2.2.2.

Normal-Frequency Recovery Voltage

Determination of Normal-Frequency Recovery Voltage. Normal-frequency recovery voltage shall be determined from the envelope of each voltage wave at a point in time coincident with that peak which occurs more than ½ cycle, and not more than 1 cycle, after final arc extinction in the last phase to clear. The normal-frequency recovery voltage for a 3-phase short circuit shall be taken as the average of the three values obtained in this manner for the three voltage waves. See Figure A-6.

NEMA Standard 8-20-1986.

*Permission has been granted for NEMA to reprint definitions from ANSI/IEEE Standard 100-1984, *IEEE Standard Dictionary of Electrical and Electronics Terms.*

[1]Slant-voltage-rated cutouts may be used in single-phase applications where the normal-frequency recovery voltage across the cutout does not exceed the maximum voltage rating to the left of the slant (/). (This note is approved by NEMA as Authorized Engineering Information.)

Copyright National Electrical Manufacturers Association
Provided by IHS under license with NEMA
No reproduction or networking permitted without license from IHS

Not for Resale

Section 41

DESIGN TESTS

41.1 APPLICABLE ANSI STANDARD

American National Standard C37.41 has been approved by NEMA and shall be included in Section 41, with the exception of the addition of Section 41.16 and the entire Section 6 shall be replaced by the Section 41.6 that follows.

NEMA Standard 8-20-1986.

41.6 INTERRUPTING TESTS

41.6.1 Test Practices

Interrupting test practices shall be as specified in Section 3 of ANSI C37.41 and as follows.

NEMA Standard 8-20-1986.

41.6.2 Test Samples

In making tests on renewable fuses, use fuse links or refill units of the same manufacturer as the fuses, fuse links, or fuse units or as recommended by the manufacturer.

NEMA Standard 8-20-1986.

41.6.3 CHARACTERISTICS OF THE TEST CIRCUIT

The interrupting tests shall be made on a single phase alternating current circuit. The circuit elements used to control the current and X/R ratio shall be in series with each other and the fuse. The test circuit frequency shall be rated frequency ± 2 Hz. If 60 Hz test facilities are not available, tests at 50 Hz ± 2 shall be acceptable for verifying 60 Hz ratings.

NEMA Standard 8-20-1986.

NOTE: 50 Hz tests may produce lower peak let-through currents but may let through more I^2t than 60 Hz tests.

Authorized Engineering Information 8-20-1986.

The parameters of the test circuits are specified in Tables 1 through 10. Typical test circuits are shown in Appendix D, Figure D1a & D1b. Methods of determining TRV parameters are shown in Appendix D. Overvoltage protective equipment used on the test circuit shall be such that no sparkover occurs during the normal interrupting operation of the fuse.

NEMA Standard 8-20-1986.

41.6.4 Determination of Available Short-Circuit Current of Test Circuit

The available short-circuit current of the test circuit shall be determined by one of the following means:

1. *Short-Circuit Test Circuit.* Short-circuiting the device properly connected in the test circuit with a connection[1] having approximately zero impedance and applying the power at the point of the voltage wave that produces maximum offset in the first loop. Where this is done, the available current shall be equal to the measured current in the test circuit multiplied by the ratio of normal-frequency recovery voltage to measured reduced voltage.

   NEMA Standard 8-20-1986.

   Where desirable, and where the circuit will be cleared within the first loop of available current, the power applied may be with reduced voltage.

   Authorized Engineering Information 8-20-1986.

2. *Calculated RMS Current.* The rms total current, including the direct-current component, shall be calculated in accordance with curve M of Appendix A in this standard. The symmetrical current for the test shall be the available asymmetrical value divided by the multiplying factor corresponding to the X/R used in the test circuit. (See Figure C-1 of Appendix C and the following note.)

   NEMA Standard 8-20-1986.

NOTE: If tests are made at an X/R ratio higher than specified in the appropriate table, the available asymmetrical current should be equal to or greater than the rated symmetrical interrupting current multiplied by the appropriate multiplying factor.

Authorized Engineering Information 8-20-1986.

41.6.5 Tests on the Device

The interrupting ability of distribution and power fuses shall be determined by the available short-circuit current of the test circuit in which they are tested. The device shall be tested in the circuit described in 41.6.4 with the zero impedance connection removed. Power shall be applied at the point on the voltage wave to produce the conditions specified in the appropriate Table 1, 4, 7, or 9 covering the particular device being tested.

NEMA Standard 8-20-1986.

[1] A fuse link may be used as the short-circuiting means, provided it is of sufficient capacity so that melting does not occur in the first major current loop. (This note is approved by NEMA as Authorized Engineering Information 8-20-1986.)

Copyright National Electrical Manufacturers Association
Provided by IHS under license with NEMA
No reproduction or networking permitted without license from IHS

Not for Resale

41.6.6 Description of Interrupting Performance Tests

41.6.6.1 Power Fuses (Except Current-Limiting)

Tests shall be made in accordance with Table 1 and shall consist of six series of tests. The six series are:

Series 1: Verification of the operation with available currents equal to the rated interrupting current at 0.87 times rated maximum voltage.

Series 2: Verification of the operation with available currents ranging from 0.87 to 0.91 times rated interrupting current at rated maximum voltage.

Series 3: Verification of the operation with available currents ranging from 0.60 to 0.70 times rated interrupting current at rated maximum voltage.

Series 4: Verification of the operation with available currents ranging from 0.20 to 0.30 times rated interrupting current at rated maximum voltage.

Series 5: Verification of the operation with available currents in the 400 A to 500 A range at rated maximum voltage.

Series 6: Verification of the operation on small overload currents at rated maximum voltage.

NEMA Standard 8-20-1986.

Table 1
INTERRUPTING PERFORMANCE TEST: POWER FUSES (EXCEPT CURRENT LIMITING)
(PARAMETERS OF TEST CIRCUITS AND TESTS)

Parameters	Test Series									
	1		2[4]		3		4		5	6
Power Frequency Recovery Voltage	87% of Rated Maximum +5% Voltage −0%		Rated Maximum Voltage +5% −0%							
Transient Recovery Voltage	SEE TABLE 2									NOT APPLIC.
Prospective (available current—rms symmetrical)	Rated Interrupting Current +5% −0%		From 87% to 91% Rated Interrupting Current		From 60% to 70% Rated Interrupting Current		From 20% to 30% Rated Interrupting Current		From 400 A to 500 A[1,2]	From 2.7 to 3.3 Times Link or Fuse Unit Rating[2]
X/R Ratio (power factor)	*X/R* Not less than 15; Power Factor not More than 6.7%								SEE TABLE 3	From 1.3 to 0.75 (From 0.6 to 0.8)
Making angle related to voltage zero—degrees	1st Test—From −5 to +15 2nd Test—From 85 to 105 3rd Test—From 130 to 150						From 85 to 105		Random Timing	
Current Rating of Fuse Link or Fuse Unit	Minimum	Maximum	Minimum	Maximum	Minimum	Maximum	Minimum	Maximum	Minimum	Minimum
Number of tests[3]	3	3	3	3	3	3	1	1	2	2
Number of tests on each fuse employing refill units or fuse links	3	3	3	3	3	3	2		4	
Number of tests on each nonrenewable fuse	1	1	1	1	1	1	1	1	1	1
Duration of normal frequency recovery voltage after interruption — Dropout Fuses	Not Less than Dropout Time or 0.1 Second, Whichever is Greater									
Duration of normal frequency recovery voltage after interruption — Nondropout Fuses	Not less than 10 Minutes								Not less than 1 Minute	

[1]If the values are lower than those of Series 6, test Series 5 need not be made.
[2]If the test involves a melting time appreciably higher than 2 seconds, the current shall be increased to obtain a melting time of approximately 2 seconds.
[3]After each test, the refill unit or fuse link and expendable cap (if used) shall be replaced. Any exhaust control device normally field replaceable shall be replaced as follows:
Test Series 1, 2, and 3: Replace after each test
Test Series 4, 5, 6: Replace after each series of tests
[4]If Series 1 tests are made at 100% of rated maximum voltage, Series 2 tests need not be made.

Copyright National Electrical Manufacturers Association
Provided by IHS under license with NEMA
No reproduction or networking permitted without license from IHS
Not for Resale

Table 2
USE WITH TABLE 1: INTERRUPTING PERFORMANCE TESTS—POWER FUSES (EXCEPT CURRENT-LIMITING)

Rated Maximum Voltage kV* (E_{max})	Inherent TRV Parameters of the Test Circuit			
	Test Series 1, 2, 3, 4		Test Series 5	
	kHz $^{+10\%}_{-0\%}$ (f)	Peak Factor $^{+10\%}_{-0\%}$[1]	kHz $^{+10\%}_{-0\%}$ (f)	Peak Factor $^{+10\%}_{-0\%}$[1]
2.8	8.5	1.4	38	1.45
5.5	6.0	1.4	29	1.55
8.3	4.7	1.4	19	1.65
15.5	3.2	1.4	18	1.65
25.8	2.1	1.4	12	1.65
38	1.6	1.4	8	1.65

*For rated maximum voltages above 38 kV, the TRV parameters of the test circuit are not specified. Appropriate values may be selected by mutual agreement between user and manufacturer.

[1]Peak factor $= \dfrac{\text{TRV Peak}}{\sqrt{2}\, E_{max} \times \text{Sin}\,(\text{Tan}^{-1}\, X/R)}$

X/R is not less than 15 for Test Series 1, 2, 3, 4
X/R is value from Table 3 for Test Series 5

Note: Peak factor should be determined based upon a symmetrical fault (Symmetrical Current) (This note is approved by NEMA as Authorized Engineering Information.)

TRV envelope specified is 1-COS shape, with Time-to-peak $= \dfrac{10^1}{2 \times f}$ Microsecond

RRRV, Volts/microsecond $= \dfrac{\text{TRV Peak}}{\text{Time-to-peak}} = 2\sqrt{2}\, E_{max} \times \text{Sin}\,(\text{Tan}^{-1} X/R) \times \text{Peak Factor} \times f$

Table 3
Minimum X/R Ratio of Test Series 5 for Power Fuses (Except Current Limiting)
(See Table 1)

Test Voltage (kV)	Minimum X/R Ratio
2.8	1.1
5.5	1.1
8.3	1.2
15.5	6.0
25.8	6.0
38.0	7.0
48.3	8.0
72.5	10.0
121.0	13.0
145.0	14.0
169.0	15.0

Copyright National Electrical Manufacturers Association
Provided by IHS under license with NEMA
No reproduction or networking permitted without license from IHS

Not for Resale

41.6.6.2 DISTRIBUTION CUTOUTS (EXCEPT OIL CUTOUTS AND OPEN LINK CUTOUTS)

41.6.6.2.1 CUTOUTS WITH SINGLE VOLTAGE RATING

Tests shall be made at rated maximum voltage in accordance with Table 4 and shall consist of 5 series of tests. The five series which are conducted at rated maximum voltage are:

Series 1: Verification of the operation with available currents equal to the rated interrupting current.

Series 2: Verification of the operation with available currents ranging from .70 to .80 times the rated interrupting current.

Series 3: Verification of the operation with available currents ranging from .20 to .30 times the rated interrupting current.

Series 4: Verification of the operation with available current in the range of 400 to 500 amperes.

Series 5: Verification of the operation with small overload currents.

NEMA Standard 8-20-1986.

Table 4
INTERRUPTING PERFORMANCE TESTS
SINGLE VOLTAGE RATED DISTRIBUTION CUTOUTS
(EXCEPT OIL CUTOUTS AND OPEN LINK CUTOUTS)
(PARAMETERS OF TEST CIRCUITS AND TESTS)

Parameters		Test Series							
		1		2		3		4	5
Power frequency recovery voltage		Rated Maximum Voltage $^{+5\%}_{-0\%}$							
Transient recovery voltage		See Table 5							Not Applicable
Prospective (available) current—rms symmetrical		Rated Interrupting Current +5% −0%		From 70% to 80% Rated Interrupting Current		From 20% to 30% Rated Interrupting Current[6]		From 400 A to 500 A[3]	From 2.7 to 3.3 Times Fuse Link Rating[4]
X/R ratio (power factor)		See Table 6							From 1.3 to 0.75 (From 0.6 to 0.8)
Making angle related to voltage zero—degrees		1st Test—From −5 to +15 2nd Test—From 85 to 105 3rd Test—From 130 to 150				From 85 to 105		Random Timing	
Fuse Link Rating		Minimum[1]	Maximum[2]	Minimum[1]	Maximum[2]	Minimum[1]	Maximum[2]	Minimum[1]	Minimum[1]
Number of Tests		3	3	3	3	1	1	2	2
Number of tests on each cutout[5]		3	3	3	3	2		4	
Duration of normal frequency recovery voltage after interruption	Dropout Fuses	Not less than 0.5 Second							
	Non-dropout fuses	Not Less than 0.5 Second							

[1]The minimum fuse link rating is 6 k for cutouts rated 50 A and 100 A and 140 k for cutouts rated 200 A.
[2]The maximum fuse link rating is 50 T for cutouts rated 50 A, 100 T for cutouts rated 100 A, and 200 T for cutouts rated 200 A.
[3]For cutouts rated 200 A test Series 4 need not be made.
[4]If the test involves a melting time appreciably higher than 2 seconds, the current shall be increased to obtain a melting time of approximately 2 seconds.
[5]After each test, only the parts normally field replaceable shall be replaced. These include the fuse link and expendable cap (if used).
[6]For cutouts with an interrupting rating of 2800 A or less, test Series 3 need not be made.

Copyright National Electrical Manufacturers Association
Provided by IHS under license with NEMA
No reproduction or networking permitted without license from IHS
Not for Resale

Table 5
USE WITH TABLE 4: INTERRUPTING PERFORMANCE TESTS, SINGLE VOLTAGE RATED DISTRIBUTION CUTOUTS (EXCEPT OIL CUTOUTS AND OPEN LINK CUTOUTS)

Rated Maximum Voltage kV (E_{max})	Inherent TRV Parameters of the Test Circuit			
	Test Series 1, 2, 3		Test Series 4	
	kHz $^{+10\%}_{-0\%}$ (f)	Peak Factor $^{+10\%}_{-0\%}$[1]	kHz $^{+10\%}_{-0\%}$ (f)	Peak Factor $^{+10\%}_{-0\%}$[1]
5.2	4.3	1.3	37	1.45
7.8	3.3	1.3	31	1.55
15	2.3	1.3	24	1.6
27	1.7	1.3	15	1.6
38	1.5	1.3	10	1.6

[1] Peak factor $= \dfrac{\text{Peak TRV}}{\sqrt{2}\, E_{max} \times \text{Sin}\,(\text{Tan}^{-1}\, X/R)}$

X R is value from Table 6

Note: Peak factor should be determined based upon a symmetrical fault (Symmetrical Current) (This note is approved by NEMA as Authorized Engineering Information.)

TRV envelope specified is 1-COS shape, with Time-to-crest $= \dfrac{10^3}{2 \times f}$ Microsecond

RRRV, Volts/microsecond $= \dfrac{\text{TRV Peak}}{\text{Time-to-peak}} = 2\sqrt{2}\, E_{max} \times \text{Sin}\,(\text{Tan}^{-1} X/R) \times \text{Peak Factor} \times f$

Copyright National Electrical Manufacturers Association
Provided by IHS under license with NEMA
No reproduction or networking permitted without license from IHS
Not for Resale

NEMA SG*2 93 ■ 6470247 0504604 620 ■

Table 6
MINIMUM X/R RATIOS FOR DISTRIBUTION CUTOUT INTERRUPTING TESTS

RATED MAXIMUM VOLTAGE		RATED INTERRUPTING CURRENT SYMMETRICAL RMS AMPERES	MINIMUM X/R RATIO	
Single-Voltage-Rated Cutouts	Slant-Voltage-Rated Cutouts[1]		Test Series 1, 2, 3, & 6 Tables 4 & 7	Test Series 4 Tables 4 & 7
2.6	—	1000–16000	5	1.1
5.2	—	1000–12500	5	1.1
7.8	—	1000–10000	8	1.2
7.8	—	11200–16000	12	1.2
15.0	7.8/15	1000– 7100	8	1.5
15.0	7.8/15	10600–13200	12	1.5
27.0	15/27	1000– 2500	8	2.0
27.0	15/27	4000– 8000	12	2.0
38.0	27/38	1300– 5000	15	3.1

[1]X/R Ratios shown in the table apply to cutouts with rated maximum voltages within ±20% of the values shown.

MINIMUM X/R RATIOS FOR DISTRIBUTION OIL CUTOUTS

Rated Maximum Voltage (kV)	Rated Interrupting Current Symmetrical RMS Amperes	Minimum X/R Ratio for Symmetrical RMS Current	
		Above 200 Amperes	200 Amperes and Below
2.6–5.2	1000–8000	9	2.3
7.8	1000–4000	9	2.3
15.0	1000–2500	10	2.3
15.0	2500–4000	12	2.3

41.6.6.2.2 CUTOUTS WITH SLANT-VOLTAGE (MULTIPLE-VOLTAGE) RATING

Tests shall be made in accordance with Table 7 and shall consist of six series of tests. The six series are:

Series 1: Verification of the operation with available currents equal to the rated interrupting current and at rated maximum voltage to left of slant.

Series 2: Verification of the operation with available currents ranging from .70 to .80 times the rated interrupting current and at rated maximum voltage to left of slant.

Series 3: Verification of the operation with available currents ranging from .20 to .30 times the rated interrupting current and at rated maximum voltage to right of slant.

Series 4: Verification of the operation with available currents in the range of 400 A to 500 A and at rated maximum voltage to right of slant.

Series 5: Verification of the operation with small overload currents and at rated maximum voltage to right of slant.

Series 6: Verification of the operation of two cutouts in electrical series connection with available currents equal to the rated interrupting current and at rated maximum voltage to right of slant.

NEMA Standard 8-20-1986.

Copyright National Electrical Manufacturers Association
Provided by IHS under license with NEMA
No reproduction or networking permitted without license from IHS
Not for Resale

Table 7
INTERRUPTING PERFORMANCE TESTS
SLANT-VOLTAGE-RATED (MULTIPLE-VOLTAGE-RATED) DISTRIBUTION CUTOUTS
(Parameters of Tests Circuits and Tests)

Parameters	Test Series									
	1		2		3		4		5	6[7]
Power frequency recovery voltage	Rated Maximum Voltage to the left of the slant				Rated Maximum Voltage to the right of the slant					
Transient recovery voltage	See Table 8								Not Applicable	See Table 8
Prospective (available) current—rms symmetrical	Rated Interrupting Current +5% −0%		From 70% to 80% Rated Interrupting Current		From 20% to 30% Rated Interrupting Current[6]		From 400 A to 500 A[3]		From 2.7 to 3.3 Times Fuse Link Rating[4]	Rated Interrupting Current +5 −0
X/R ratio (power factor)	See Table 6								From 1.3 to 0.75 (from 0.6 to 8.0)	See Table 6
Making angle related to voltage zero—degrees	1st Test—From −5 to +15 2nd Test—From 85 to 105 3rd Test—From 130 to 150				From 85 to 105		Random Timing			1st Test—From −5 to +15 2nd Test—From 85 to 105 3rd Test—From 130 to 150
Fuse Link Rating	Minimum[1]	Maximum[2]	Minimum[1]	Maximum[2]	Minimum[1]	Maximum[2]	Minimum[1]	Minimum[1]	Minimum[1] [8]	Maximum[2] [8]
Number of Tests	3	3	3	3	1	1	2	2	3	3
Number of tests on each cutout[5]	3	3	3	3	2		4		3	3
Duration of normal frequency recovery voltage after interruption		Dropout Fuses	Not less than 0.5 Second							
		Non-dropout fuses	Not Less than 0.5 Second							

[1]The minimum fuse link rating is 6 k for cutouts rated 50 A and 100 A and 140 K for cutouts rated 200 A.
[2]The maximum fuse link rating is 50 T for cutouts rated 50 A, 100 T for cutouts rated 100 A, and 200 T for cutouts rated 200 A.
[3]For cutouts rated 200 A test Series 4 need not be made.
[4]If the test involves a melting time appreciably higher than 2 seconds, the current shall be increased to obtain a melting time of approximately 2 seconds.
[5]After each test, only the parts normally field replaceable shall be replaced. These include the fuse link and expendable cap (if used).
[6]For cutouts with an interrupting rating of 2800 or less, test Series 3 need not be made.
[7]Test Series 6 uses two identically rated cutouts in electrical series connection.
[8]Use same fuse link rating in both cutouts.

41.6.6.3 DISTRIBUTION OIL CUTOUTS

Five tests shall be made at maximum rated voltage with available current equal to the rated interrupting current. The *X/R* ratio of the test circuit shall be in accordance with Table 6.

NEMA Standard 8-20-1986.

41.6.6.4 DISTRIBUTION OPEN LINK CUTOUT

A sufficient number of tests shall be made at maximum rated voltage to ascertain the specified interrupting requirements. The *X/R* ratio of the test circuit shall be 1.33 for all values of test current.

NEMA Standard 8-20-1986.

A lumped capacitance not exceeding 0.65 microfarads may be shunted across the fuse during the test.

Authorized Engineering Information 8-20-1986.

41.6.6.5 CURRENT LIMITING POWER AND DISTRIBUTION FUSES

Tests shall be made in accordance with Table 9 and shall consist of three series of tests. The three series are listed below. It is not necessary to make interrupting tests on fuse units of all current ratings of a homogeneous series (see 41.6.6.5.2 for requirements to be met and tests to be performed).

Series 1:

a. Power Fuses: Verification of the operation with available currents equal to the rated interrupting current, I_1, at 0.87 times rated maximum voltage and with available currents equal to 0.87 rated interrupting current, I_1, at rated maximum voltage.
b. Distribution Fuses: Verification of operation with prospective currents equal to rated interrupting current, I_1, at rated maximum voltage.

Copyright National Electrical Manufacturers Association
Provided by IHS under license with NEMA
No reproduction or networking permitted without license from IHS
Not for Resale

NEMA SG*2 93 ■ 6470247 0504606 4T3 ■

Table 8
USE WITH TABLE 7: INTERRUPTING PERFORMANCE TESTS SLANT-VOLTAGE-RATED (MULTIPLE-VOLTAGE-RATED) DISTRIBUTION CUTOUTS

Rated Maximum Voltage kV (E_{max})[1]	INHERENT TRV PARAMETERS OF THE TEST CIRCUIT				
	Test Series 1, 2, 3, 6			Test Series 4	
	kHz +10% − 0% (f)		Peak Factor +10%[2] − 0%	kHz +10% − 0% (f)	Peak Factor +10%[2] − 0%
	Series 1, 2	Series 3, 6			
7.8/15	3.3	2.3	1.3	24	1.6
15/27	2.3	1.7	1.3	15	1.6
27/38	1.7	1.5	1.3	10	1.6

[1]TRV Parameters shown in the table apply to cutouts with rated maximum voltages within ±20% of the values shown.

[2]Peak factor $= \dfrac{\text{TRV Peak}}{\sqrt{2}\, E_{max} \times \text{Sin}\,(\text{Tan}^{-1}\, X/R)}$

X/R is not less than 15 for Test Series 1, 2, 3, 4

X/R is value from Table 3 for Test Series 5

Note: Peak factor should be determined based upon a symmetrical fault (Symmetrical Current)
(This note is approved by NEMA as Authorized Engineering Information.)

TRV envelope specified is 1-COS shape, with Time-to-crest $= \dfrac{10^3}{2 \times f}$ Microsecond

RRRV, Volts/microsecond $= \dfrac{\text{TRV Peak}}{\text{Time-to-peak}} = 2\sqrt{2}\, E_{max} \times \text{Sin}\,(\text{Tan}^{-1} X/R) \times \text{Peak Factor} \times f$

Series 2: Verification of the operation with available current I_2 in the region producing the maximum arc energy.

NEMA Standard 8-20-1986.

1. If in making tests in accordance with Series 1, the requirements of Series 2 are completely met on one or more tests, then these tests need not be repeated as part of Series 2.
2. If the available current necessary to comply with the requirements of Series 2 is greater than the rated interrupting capacity, tests with Series 2 need not be made.
3. I_2 may be determined approximately from the following equation if one test in Series 1 has been made at a current at least 150 times rating under substantially symmetrical fault initiation.

$$I_2 = i_1 \sqrt{\frac{I_1}{I_1}}$$

where: I_2 = available curent for Series 2 (rms symmetrical)
i_1 = instantaneous cutoff current
I_1 = available current for Series 1 test (rms symmetrical)

Authorized Engineering Information 8-20-1986.

Series 3: Verification of the operation at low current, I_3. For back-up fuses, I_3 is the rated minimum current. For general purpose fuses, I_3 is the current that causes melting of the fuse in no less than 1 hour.

NEMA Standard 8-20-1986.

41.6.6.5.1 ALTERNATE TEST METHOD FOR SERIES 3 TESTS ON CURRENT LIMITING FUSES, TABLE 9

To avoid testing at the specified voltage for the full test period, an alternate test shall be permitted to be used for Series 3 test, specified in 41.6.6.5. The characteristics of this circuit, as illustrated in Figure 1 shall be:

1. A low-voltage power source sufficient to cause the desired current to flow through the fuse to be tested and means for adjusting the circuit to hold the current constant.
2. A high-voltage test circuit as illustrated having a voltage source equal to the rated maximum voltage of the fuse to be tested. The reactance, L, of the test circuit shall be shunted by a resistor R_1 with a value equal to approximately 40 times the reactance X_L. If this value does not result in critical damping, the resistance shall be reduced to achieve critical damping. This circuit shall be pre-adjusted to provide the same test current as for the low current part of the test, as well as the parameters as specified in Table 9.

Copyright National Electrical Manufacturers Association
Provided by IHS under license with NEMA
No reproduction or networking permitted without license from IHS
Not for Resale

Table 9
INTERRUPTING PERFORMANCE TESTS: CURRENT LIMITING POWER AND DISTRIBUTION FUSES (PARAMETERS OF TEST CIRCUITS)

Parameters		Type of Fuse	Test Series 1		2	3[4,6]
Power frequency recovery voltage		Power	87% Rated Maximum Voltage +5% −0%	Rated Maximum Voltage +5% −0%	Rated Maximum Voltage +5% −0%	
		Distribution	Rated Maximum Voltage +5% −0%	Not Required		
Transient recovery voltage		Power	See Table 10			
		Distribution				
Prospective (available) current—rms symmetrical		Power	I_1 +5% −0%	87%I_1 +5%[1] −0%	I_2	I_3
		Distribution	I_1 +5% −0%	Not Required		
X/R ratio (power factor)		Power	*X/R* Not Less than 15; (Power factor Not More than 6.7%)			*X/R* − 2.29[7] to 1.33 p.f. − 40 to 60%[7]
		Distribution	*X/R* Not Less than 10; (Power Factor Not More than 10%)			
Making Angle after voltage zero—degrees		Both	Not Applicable		0 to 20	Random
Instantaneous current at initiation of arcing		Both	Not Applicable		0.85 I_2 to 1.06 I_2	Not Applicable
Initiation of arcing after voltage zero—degrees		Both	For One Test—From 40 to 65[2] For Two Tests—From 65 to 90		Not Applicable	Not Applicable
Duration of normal frequency recovery voltage after interruption	Dropout Fuse	Both	Not Less than Dropout Time or 1 Second, Whichever is Greater			
	Nondropout Fuse		Not Less than 1 Minute[3,5]		Not Less than 10 Minutes[3]	
Number of Tests		Power	3	3	3	2
		Distribution	3	0	3	2

[1]Tests need not be made if tests at the I_1 level are made at 100% maximum rated voltage.
[2]Since the operating conditions can produce a wide variety of stresses on the fuse and as the interrupting tests are intended in principle to produce the most severe conditions mainly as regards the arc energy and the thermal and mechanical stresses for this value of current, it is recognized that these conditions will be practically obtained at least once, when making the three tests indicated.
[4]See 41.6.6.5.1 for alternate test.
[5]If Series 2 tests are not made, duration shall be not less than 10 minutes.
[6]Series 3 tests are made with a current value corresponding to the stated point of the time-current characteristic, with a tolerance of 0% and −10% and leading to melting in not less than 1 hour for general purpose fuses. When testing station limitations prevent the maintenance of constant current, the tolerance on the current can be exceeded in either direction during not more than 20% of the total melting time.
[7]The reactance of the test circuit shall be shunted by a resistance with a value equal to approximately 40 times the value of the reactance. However, if this value does not result in at least critical damping the resistance shall be reduced to achieve critical damping. Critical damping is obtained when:

$$R = \frac{fo}{2fN} X$$

where: fo = natural frequency of test circuit without damping
fN = power frequency
x = reactance of the circuit at power frequency

Copyright National Electrical Manufacturers Association
Provided by IHS under license with NEMA
No reproduction or networking permitted without license from IHS
Not for Resale

NEMA SG*2 93 ■ 6470247 0504608 276 ■

Table 10
USE WITH TABLE 9: INTERRUPTING PERFORMANCE TESTS—CURRENT-LIMITING POWER AND DISTRIBUTION FUSES

Rated Maximum Voltage kV (E_{max})	Inherent TRV Parameters of the Test Circuit			
	Test Series 1		Test Series 2	
	kHz $^{+10\%}_{-0\%}$ (f)	Peak Factor $^{+10\%}_{-0\%}$[1]	kHz ±15% (f)	Peak Factor ±10%[1]
2.8	8.5	1.4	3.3	1.5
5.5	6.0	1.4	2.7	1.5
8.3	4.7	1.4	2.7	1.5
15.5	3.2	1.4	1.8	1.5
25.8	2.1	1.4	1.3	1.5
38	1.6	1.4	1.1	1.5

[1]Peak factor = $\dfrac{\text{TRV Peak}}{\sqrt{2}\, E_{max} \times \text{Sin}\,(\text{Tan}^{-1}\, X/R)}$

X/R is not less than 15 for Test Series 1, 2, 3, 4

X/R is value from Table 3 for Test Series 5

Note: Peak factor should be determined based upon a symmetrical fault (Symmetrical Current) (This note approved by NEMA as Authorized Engineering Information.)

TRV envelope specified is 1-COS shape, with Time-to-peak = $\dfrac{10^3}{2 \times f}$ Microsecond

RRRV, Volts/microsecond = $\dfrac{\text{TRV Peak}}{\text{Time-to-peak}} = 2\sqrt{2}\, E_{max} \times \text{Sin}\,(\text{Tan}^{-1} X/R) \times \text{Peak Factor} \times f$

Copyright National Electrical Manufacturers Association
Provided by IHS under license with NEMA
No reproduction or networking permitted without license from IHS
Not for Resale

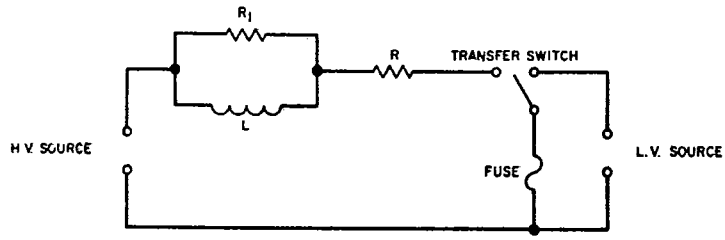

Figure 1
ALTERNATE TEST CIRCUIT FOR SERIES 3 TEST ON CURRENT LIMITING FUSES (Not to Scale)

3. A throw-over means for disconnecting the fuse under-going test from the low-voltage circuit and connecting it into the high-voltage circuit.
4. The conductor size used to connect the fuse into the test circuits (1) and (2) shall be the same as specified in Table 11. With the fuses to be tested connected in the test circuits, apply the low voltage with random timing of initiation with respect to voltage zero. Hold the current constant during both the low and high-voltage portions of the test. In the throw-over from the low-voltage to the high-voltage circuit, the current shall be permitted to be interrupted for a time interval not longer than 0.2 seconds.

NEMA Standard 8-20-1986.

41.6.6.5.2 INTERRUPTING TESTS FOR CURRENT-LIMITING FUSE UNITS OF A HOMOGENEOUS SERIES

41.6.6.5.2.1 CHARACTERISTICS OF FUSE UNITS OF A HOMOGENEOUS SERIES

Fuse-units are considered as forming a homogeneous series when their characteristics comply with the following:

1. Rated voltage, interrupting current and frequency shall be the same.
2. All material shall be the same.
3. All dimensions of the fuse-unit except the cross-section of the fuse-elements and the number of fuse-element(s) as detailed below from item (4) to (8) shall be the same.
4. In any fuse-unit all the main fuse-elements shall be identical.
5. The law governing the variation of the cross-section of individual fuse-elements along their length shall be the same.
6. All variations in thickness, width and number shall be monotonic[1] with respect to rated current. Thus, balancing an increase in cross-section by reducing the number of fuse-elements and vice versa is not allowed.
7. The variation in distance, if any, between individual fuse-elements and that in distance, if any, between fuse-elements and fuse-barrel shall be monotonic with respect to the rated current.
8. A special fuse-element used for an indicator or striker is exempt from (5) and (6) above, but this element shall be the same for all the fuse-units.

NEMA Standard 8-20-1986.

[1]Monotonic function: A function continually varying in the same direction for a given direction of the vehicle.

Table 11
SIZE AND LENGTH OF BARE CONDUCTORS FOR SPECIFIED TESTS

Rated Continuous Current of Switch, or Fuse Support (Amperes)					Size and Length of Bare Copper Leads	
Distribution Enclosed, Open, and Open-Link Cutouts when Tested as		Distribution Oil Fuse or Disconnecting Cutouts	Distribution Enclosed Air Switches	Power Fuses	Size of Leads	Minimum Length, Inches
Fuse Cutout	Disconnecting Cutout					
50	—	—	—	Up to 50	No. 6 AWG Solid	48
—	100	—	—	—	No. 2 AWG Stranded	48
100	—	—	—	100	No. 1 AWG Stranded	48
—	200	—	—	—	No. 2/0 AWG Stranded	48
—	—	100	—	—	No. 1/0 AWG Stranded	48
200	—	200	200	200	No. 4/0 AWG Stranded	48
—	300	300	300	300	250 MCM*	48
—	—	—	400	400	400 MCM*	48
—	—	—	—	-	600 MCM*	48

*Thousand circular Mils.

Copyright National Electrical Manufacturers Association
Provided by IHS under license with NEMA
No reproduction or networking permitted without license from IHS
Not for Resale

NEMA SG*2 93 ■ 6470247 0504610 924 ■

41.6.6.5.2.2 TEST REQUIREMENTS

In a homogeneous series of fuse-units, interrupting tests need only be made in accordance with Table 12. Symbols in Table 12 are defined as follows:

NEMA Standard 8-20-1986.

Table 12
INTERRUPTING TEST REQUIREMENTS FOR A HOMOGENEOUS SERIES OF FUSE UNITS

Homogeneous Series Achieved by	Test Series	Fuse-Units to be Tested (X Shows the tests to be performed) A	B	C
Progressive change in number n or cross-section s monotonic, or both, with respect to rated current $n_A < n_B < n_C$ $s_A < s_B < s_C$	1	X		X
	2[1]	X		X
	3[2]	X	X[3]	X
Constant Number n Increase of cross-section s $s_A < s_B < s_C$	1	X		X
	2[1]	X		X
	3			X
Constant cross-section s Increase of number n	1	X		X
	2			X
$n_A < n_B < n_C$	3[2]	X		X

A = Fuse unit of lowest current rating
B = Any fuse-unit of a current rating between A and C
C = Fuse-unit of highest current rating

The parameters to be considered are:

$S_AS_BS_C$ = cross section of the individual main fuse-element in A, B, C.

$N_AN_BN_C$ = number of main fuse-elements in A, B, C.

Authorized Engineering Information 8-20-1986.

[1]The test current I_2 for the fuse units A and C shall be chosen according to the current rating of the fuse-unit A and C respectively.
[2]The fuse-unit of lowest current rating shall contain at least 2 individual main fuse-elements in addition to the element, if any, used for operating the striker.
[3]This does not require that every rating must be tested, but with diminishing current ratings a test is only to be made for the current rating at which the number of elements is reduced.

41.6.6.5.2.3 INTERRUPTION OF INTERRUPTING TESTS

If the results of tests made according to Table 12 meet the requirements of 41.6.7, any current rating of fuse-units within the homogeneous series shall be deemed to comply with the interrupting requirements of this specification. If a fuse-unit does not perform satisfactorily according to 41.6.7 on one or more test series, that fuse-unit shall be rejected from the homogeneous series, but such failure does not necessarily entail rejection of any other current rating.

NEMA Standard 8-20-1986.

It should be noted that a particular range of current ratings in one barrel size may constitute one homogeneous series for one test duty, but two or more homogeneous series for the purpose of another test duty.

The values of minimum interrupting current of fuse-units not tested are determined from test Series 3 as follows:

1. Constant n, increase of s: It is assumed that the melting time at I_3 for fuse-unit A and B is not less than for the fuse-unit C. The test in accordance with Table 12 is therefore considered as proving that fuse-units A and B have a minimum interrupting current ascertained by reading from their time/current characteristics the currents corresponding to the melting time given by the minimum interrupting current of fuse-unit C and its time/current characteristic.
2. Constant s, increase of n: The minimum interrupting current I_3 of fuse-units A and C may or may not be the same. If they are the same, I_3 is deemed to apply to fuse-unit B. If they are different, a straight line is drawn through the points corresponding to the respective minimum interrupting currents on the time/current characteristics of fuse unit A and C. The intersection of this line and the time/current characteristics of fuse unit B is deemed to define the minimum interrrupting current of fuse unit B. If the manufacturer claims a value of minimum interrupting current less than that derived from either (1) or (2) above, this should be proved by a separate test.

Authorized Engineering Information 8-20-1986.

Copyright National Electrical Manufacturers Association
Provided by IHS under license with NEMA
No reproduction or networking permitted without license from IHS
Not for Resale

41.6.6.5.3 OVERVOLTAGES FOR CURRENT-LIMITING POWER AND DISTRIBUTION FUSES

Over-voltages produced during the Series 1 and 2 interrupting tests specified in 41.6.6.5 shall be recorded by a cathode ray oscillograph or other instrument having a frequency response greater than that of the waveforms being measured.

NEMA Standard 8-20-1986.

41.6.6.5.4 CUTOFF (PEAK LET-THROUGH) CURRENT FOR CURRENT-LIMITING POWER AND DISTRIBUTION FUSES

The values of the cutoff (peak let-through) current obtained from the oscillograms taken during Series 1 interrupting tests specified in 41.6.6.5 shall not exceed those given by the fuse manufacturer.

NEMA Standard 8-20-1986.

41.6.6.5.5 PRESENTAION OF DATA

The characteristic curve showing the relationship of cutoff current to prospective available current in the current limiting range shall be plotted on log-log coordinate paper with cutoff current (peak let-through) on the Y axis and prospective current (RMS symmetrical available) on the X axis, so that the cutoff (peak let-through) current for each rating of current limiting fuse can be obtained.

NEMA Standard 8-20-1986.

41.6.7 Condition After Interrupting Performance Tests

After successful completion of performance tests specified in 41.6.6 and after renewing parts normally field renewable, excluding the fuse holder, the condition of the fuse, including the fuse support, fuse carrier, or fuse holder shall be:

1. *Mechanically* in substantially the same condition as at the beginning of the test, except for the erosion of the bore of the the fuse holder employing a fuse link or a fuse carrier in an oil cutout.
2. *Electrically* capable of carrying rated current continuously at the rated maximum voltage. If there is evidence of contact deterioration, a temperature rise test shall be made on the fuse at rated current with the maximum size of fuse link or refill unit for the time it takes the temperature to stabilize. If there is visible evidence of insulator contamination from the fuse operation, a normal frequency dry withstand test shall be made at 75 percent of the rated value.

NEMA Standard 8-20-1986.

41.16 TESTS FOR CURRENT LIMITING FUSES IN ENCLOSURES

Many applications require the use of current limiting fuses in enclosures where the fuse and the associated contacts may be subjected to air temperatures above 40°C. Other applications may require the fuse to be immersed in a liquid such as transformer oil.

Authorized Engineering Information 8-20-1986.

Current limiting fuses intended for such service shall comply with the applicable design tests specified in this section and in accordance with Section 41.6 and ANSI C37.47-1981.

NEMA Standard 8-20-1986.

When current-limiting fuses are applied in enclosures of any type, the performance characteristics of the total system should be evaluated. The following test sections reflect this basic requirement for system capability and require tests of the total system.

There are five types of fuse applications covered by this standard:

Type 1:

The fuse is mounted in a compartment such that relatively free air circulation exists. Reference ambient temperature is the enclosure air temperature. (Illustration: Live front pad-mounted transformers and vaults.)

Type 2:

The fuse is inside a container which has restricted air flow surrounding the fuse, but relatively free air circulation outside of the container. Reference ambient temperature is that of the air outside the container. (Illustration: Fuse inside a canister in a vault.)

Type 3:

The fuse is inside a container which has restricted air flow surrounding the fuse, but relatively free liquid flow outside of the container. Reference ambient temperature is that of the liquid outside the container. (Illustration: Fuse inside a canister immersed in transformer oil.)

Type 4:

A combination of types (2) and (3) where the container is partially in air and partially in liquid. The reference ambient temperature is that of the liquid outside the container. (Illustration: Fuse inside a transformer bushing.)

Type 5:

The fuse is directly immersed in liquid, without the need for separate fuse enclosure, and with relatively free liquid circulating around the fuse. The reference ambient temperature is that of the liquid surrounding the fuse. (Illustration: Oil immersible fuse in transformer or switchgear oil.)

Copyright National Electrical Manufacturers Association
Provided by IHS under license with NEMA
No reproduction or networking permitted without license from IHS
Not for Resale

Because the fuse and its enclosure produce a system with interacting effects, and each component could be supplied by a different manufacturer, it is essential that sufficient data is made available to permit proper application.

Authorized Engineering Information 8-20-1986.

Suitability of a specific application of the fuse in an enclosure shall be the responsibility of the supplier of the fuse enclosure package (FEP).

NEMA Standard 8-20-1986.

NOTE: For Types 1 and 5 the FEP is the Fuse itself; for Types 2, 3, and 4, the FEP is the Container and Fuse combination.

Authorized Engineering Information 8-20-1986.

41.16.1 Reference Ambient Temperature

The tests conducted on FEP types 2, 3, or 4 in accordance with this section shall be performed with the FEP placed both in the reference ambient temperature of 25 ° ± 15 °C and at the maximum reference ambient temperature specified by the FEP supplier. FEP types 1 and 5 shall be tested at the maximum reference ambient temperature specified by the FEP supplier. Oil immersible fuses shall be tested in either air or oil.

In all cases the test specimen shall be stabilized at the reference ambient temperature before the test current is applied to the fuse.

NEMA Standard 8-20-1986.

41.16.2 Test Temperatures for Oil Immersible Fuses

Oil immersible fuses are designed for partial or total immersion in oil without the need for a separate fuse enclosure. These fuses are designed for use in various equipments, and the oil temperature to which the fuse will be subjected will depend on the the application. The specific test sections, therefore, do not specify a maximum test temperature but utilize the maximum reference ambient temperature specified by the FEP supplier.

Authorized Engineering Information 8-20-1986.

41.16.3 Test Specimen Mounting

The tests specified shall be performed with the current-limiting fuse or FEP mounted in a manner which will simulate the service conditions specified by the supplier of the FEP.

NEMA Standard 8-20-1986.

41.16.4 Interrupting Tests for FEP

Interrupting tests shall be performed in accordance with 41.6.6.5 test series 2 and 3, with the following as exceptions and additions.

Series 2: This series shall be the same as specified in 41.6.6.5.

Series 3: This series shall be the same as specified in 41.6.6.5, except as follows:

1. The test current for the FEP using a general purpose fuse shall cause fuse melting in not less than one hour. For elevated reference ambient temperature tests, this current shall be derated according to the FEP derating factors.
2. The test current for the FEP using a backup type fuse shall be the rated minimum interrupting current of the fuse.

NEMA Standard 8-20-1986.

41.16.4.1 Voltage Withstand

The FEP shall be allowed to cool naturally during the voltage period.

NEMA Standard 8-20-1986.

41.16.5 Tests for Oil Tightness

The FEP test samples (see 41.16.5.4) shall be subjected to the following tests in the sequence listed. (These tests apply to *any* FEP which is used in an oil environment such as described in 41.16, types (3), (4), and (5).)

NEMA Standard 8-20-1986.

41.16.5.1 Cycling Test in Air

The FEP shall be thermally cycled in air from −30 °C to the maximum reference ambient temperature as specified by the FEP supplier. The rate of temperature change shall be controlled to prevent thermal shock. Each thermal cycle from one temperature extreme to the other shall be accomplished in not more than eight hours, with holding periods at the temperature extreme of sufficient duration for the temperature of the FEP to stabilize at the extreme temperature limits. The test series shall consist of ten thermal cycles over any convenient time period.

NEMA Standard 8-20-1986.

41.16.5.2 Cycling Test in Oil

The FEP shall be thermally cycled in oil with current passed through the fuse for part of the cycle. The FEP shall be immersed in oil, and the oil temperature shall be raised from room temperature to the maximum referenced ambient temperature specified by the FEP supplier in not more than six hours*. The rate of rise of oil temperature shall not exceed 0.5 °C per minute. When the oil temperature reaches the maximum specified, the fuse rated current, or the maximum permissible continuous current as specified by the FEP supplier shall be maintained through the fuse for a period of two hours with

Copyright National Electrical Manufacturers Association
Provided by IHS under license with NEMA
No reproduction or networking permitted without license from IHS
Not for Resale

the oil temperature held at or above this maximum.

At the conclusion of the two-hour current period the oil shall be allowed to cool to ambient temperature (25 °C ± 5 °C [cold section of cycle]). The test series shall consist of ten thermal cycles over any convenient time period.

NEMA Standard 8-20-1986.

**NOTE:* Current may be used as a supplemental heat source during the heating cycle.

Authorized Engineering Information 8-20-1986.

41.16.5.3 Alternate Tests

The requirements of 41.16.5.1 and 41.16.5.2 can be met by a single test series made according to 41.16.5.2 with the following exceptions:

1. The test FEP shall be cycled from −30 °C to the maximum reference ambient temperature specified by the FEP supplier in not more than eight hours, with a holding period at −30 °C of sufficient duration for the temperature of the fuse or FEP to stabilize.
2. At the conclusion of the two-hour maximum temperature period, the oil shall be cooled to −30 °C in not more than eight hours.

NEMA Standard 8-20-1986.

41.16.5.4 Test Samples

A total of five FEP's with the largest current rated fuse in each of the physical fuse sizes manufactured, shall be tested. The FEP shall be mounted or supported in the oil as specified by the FEP supplier.

NEMA Standard 8-20-1986.

41.16.5.5 Test Criteria

The criteria to be used in determining whether or not a particular FEP design passes the test for oil tightness shall be maintenance of a minimum of 14 psi positive pressure differential and the absence of bubbles, while the FEP is submerged in oil (or suitable equivalent liquid) over a five-minute period.

NEMA Standard 8-20-1986.

41.16.5.6 Alternate Oil Tightness Test

Alternate but not necessarily equivalent test methods include one of the following:

1. The leak rate shall be measured using a helium detecting mass spectrometer. The maximum permissible leak rate, both before and after exposure to the the above specified test cycles, shall be 1×10^{-6} standard cc/second. (One atmosphere pressure differential.) Refer to ASTM E-498.
2. The test FEP shall be carefully inspected for oil ingress using ultraviolet light, spectrographic analysis, or another equivalent positive oil-detecting technique and oil shall not be detected.

All five FEP samples shall pass the test criteria.

NEMA Standard 8-20-1986.

NOTE: The use of ultraviolet light or another technique for detecting presence of oil inside the fuse will require further work to permit a quantizing of the test to provide a correlation with expected long time service when submersed in transformer oil. The use of a fluorescent dye in the oil, plus comparison with an unexposed fuse, are possible techniques which should be considered.

Authorized Engineering Information 8-20-1986.

Copyright National Electrical Manufacturers Association
Provided by IHS under license with NEMA
No reproduction or networking permitted without license from IHS
Not for Resale

NEMA SG*2 93 ■ 6470247 0504614 57T ■

Section 42
DISTRIBUTION CUTOUTS AND FUSE LINKS

42.1 APPLICABLE ANSI STANDARD

American National Standard C37.42 has been approved as the NEMA Standard for section 42.

NEMA Standard 8-20-1986.

Section 44
DISTRIBUTION OIL CUTOUTS AND FUSE LINKS

44.1 APPLICABLE ANSI STANDARD

American National Standard C37.44 has been approved as the NEMA Standard for section 44.

NEMA Standard 8-20-1986.

Section 45
DISTRIBUTION ENCLOSED SINGLE-POLE AIR SWITCHES

45.1 APPLICABLE ANSI STANDARD

American National Standard C37.45 has been approved as the NEMA Standard for section 45.

NEMA Standard 11-12-1981.

Section 46
POWER FUSES AND FUSE DISCONNECTING SWITCHES

46.1 APPLICABLE ANSI STANDARD

American National Standard C37.46 has been approved as the NEMA Standard for section 46.

NEMA Standard 8-20-1986.

Copyright National Electrical Manufacturers Association
Provided by IHS under license with NEMA
No reproduction or networking permitted without license from IHS
Not for Resale

Section 46A
CURRENT-LIMITING RESISTORS FOR USE WITH POWER FUSES

46A.1 APPLICABLE ANSI STANDARD

At the present time, no ANSI Standard for this section is in print, therefore, the following shall be used as the NEMA Standard.

NEMA Standard 8-20-1986.

46A.2 RATING STANDARDS

46A.2.1 Rating Information

A. The rating of a current-limiting resistor unit shall include:

1. Continuous current rating
2. Resistance of the unit
3. Rms voltage designed to withstand across its terminals during short-circuit conditions
4. Rms system voltage
5. System frequency
6. Length of time in seconds during which it will carry the rms current obtained with rated voltage (see Item 3) applied across its terminals.

NEMA Standard 8-20-1986.

B. The rating of a current-limiting resistor assembly shall include:

1. Continuous current rating
2. Rms system voltage
3. System frequency
4. Total resistance of the current-limiting resistor unit or units.

NEMA Standard 8-20-1986.

46A.2.2 Basis of Continuous Current Rating

The continuous current rating shall be the rms amperes which current-limiting resistors are capable of carrying continuously with a temperature rise of 30 °C on the terminals above an ambient of 40 °C or 55 °C as specified in 46A.4.1, with the exception of the resistor element, when tested under the usual service conditions specified in C37.40-2.1 and 46A.4.1.

NEMA Standard 8-26-1946, revised 1-22-1954.

46A.2.3 Continuous Current Rating

The continuous current ratings of current-limiting resistors shall be: 0.5, 1, 2, 3 and 5 amperes.

NEMA Standard 4-27-1948.

46A.2.4 Basis of Voltage Rating

A. *Current-Limiting Resistor Units*

The voltage rating shall be the RMS volts at which current-limiting resistor units are designed to be operated, based on their ability to meet the test conditions described in 46A.3.1.

NEMA Standard 8-20-1986.

B. *Current-Limiting Resistor Assemblies*

The voltage rating shall be the RMS volts which current-limiting resistor assemblies are capable of withstanding, based on the dielectric test voltages specified in C37.41. The dielectric tests shall be made between live parts with the resistor unit or units removed and between live parts and base of the completely assembled current-limiting resistor assembly.

NEMA Standard 8-26-1984.

46A.2.5 Nominal Voltage Ratings

The nominal voltage ratings of current-limiting resistor units and assemblies should be:

2.4kV	14.4kV	46.0kV	115.0kV
4.8kV	23.0kV	69.0kV	138.0kV
7.2kV	34.5kV	92.0kV[1]	161.0kV

Authorized Engineering Information 8-20-1986.

46A.2.6 Basis of Resistance Rating

The resistance rating shall be the resistance in ohms of the current-limiting resistor, based on direct-current resistance measurements made at 20 °C to 30 °C.

NEMA Standard 4-22-1948.

46A.2.7 Basis of Short Time Rating

The short-time ratings shall be the length of time in seconds during which the current-limiting resistor will carry the rms current obtained by placing rated voltage across the resistor, without deterioration of any component material.

NEMA Standard 4-22-1948.

46A.3 TESTING STANDARDS-DESIGN TESTS

[1]There are no insulator units rated 92 kV, therefore, insulators of the next higher voltage class shall be used. (This note is approved as NEMA Standard.)

Copyright National Electrical Manufacturers Association
Provided by IHS under license with NEMA
No reproduction or networking permitted without license from IHS
Not for Resale

NEMA SG*2 93 ■ 6470247 0504616 342 ■

46A.3.1 Short-Time Rating Tests

Tests to establish the short-time rating shall be made immediately after the current-limiting resistor has been carrying 150 percent of rated current for at least 2 hours in an ambient temperature of 20 °C to 30 °C.

NEMA Standard 4-22-1948.

46A.3.2 Radio Influence Tests

Current-limiting resistors shall meet the requirements of C37.41 and C37.46.

NEMA Standard 8-20-1986.

46A.4 APPLICATION STANDARDS

46A.4.1 Usual Service Conditions

In addition to the usual service conditions specified in C37.40, current-limiting resistors shall be suitable for operation at their standard rating:

1. Where the temperature of the cooling medium does not exceed 40 °C if the unit is designed so that, when carrying rated current, the temperature rise at the terminals will not exceed 30 °C if conducting parts, excluding the resistor element, are of copper or similar material, and so that insulation material will not be subjected to temperatures exceeding the limits for the class of insulation involved.
2. Where the temperature of the cooling medium does not exceed 55 °C if the unit is designed so that, when carrying rated current continuously, the temperatures of insulation material and of terminal parts will not exceed the limits specified in item 1 and, in addition, all contacts are silver-surfaced or equivalent, and all joints, including terminals, are either:
   a. Separately held mechanically and soldered or silver-surfaced; or
   b. Brazed, welded or silver soldered.

NEMA Standard 8-20-1986.

46A.4.2 Resistors in Primary Circuits of Potential Transformers and Auxiliary Power Transformers

Where fuses are used in the primary of a voltage transformer, resistors shall be used in series with the fuses when the interrupting rating of the latter is less than the short-circuit current which the system can deliver to the fuses.

NEMA Standard 4-22-1948.

It is recognized that it may be practical to use a resistor which will reduce the fuse duty to a value well within its interrupting rating.

Authorized Engineering Information 8-20-1986.

46A.4.3 Resistor and Fuse in Combination

In applying a resistor and fuse combination, the short-time rating of the resistor unit (see 46A.2.1, Part A6) shall be in excess of the clearing time of the associated fuse.

NEMA Standard 8-20-1986.

46A.5 MANUFACTURING STANDARDS

46A.5.1 Nameplate Marking

A. The following minimum amount of information shall be placed on the current-limiting resistor unit:
   1. Manufacturer's name or trademark (or logo)
   2. Manufacturer's type or identification number
   3. Continuous current rating in amperes
   4. Resistor rating in ohms
   5. Nominal voltage rating in rms volts which the resistor unit is designed to withstand across its terminals
   6. Nominal voltage rating in system rms volts
   7. System frequency rating in cycles per second
   8. Short-time rating in seconds

NEMA Standard 8-20-1986.

B. The following minimum amount of information shall be placed on the current-limiting resistor assembly:
   1. Manufacturer's name or trademark (or logo)
   2. Manufacturer's type or identification number
   3. Continuous current rating of resistor unit or units in rms amperes
   4. Nominal voltage rating in rms volts
   5. System frequency rating in cycles per second
   6. Total resistance of current-limiting resistor unit or units in ohms
   7. Full-wave impulse withstand voltage rating

NEMA Standard 4-22-1948, revised 7-21-1954, 11-12-1981.

46A.5.2 Shipment of Current-Limiting Resistors

Current-limiting resistors shall be shipped completely assembled with insulators if the supports are rated 46kV or below. The insulators for supports rated above 46kV shall be shipped separately.

NEMA Standard 1-22-1954.

Copyright National Electrical Manufacturers Association
Provided by IHS under license with NEMA
No reproduction or networking permitted without license from IHS

Not for Resale

Section 47
DISTRIBUTION FUSE DISCONNECTING SWITCHES, FUSE SUPPORTS, AND CURRENT-LIMITING FUSES

47.1 APPLICABLE ANSI STANDARD

American National Standard C37.47-1981 has been approved as the NEMA Standard for Section 47.

NEMA Standard 8-20-1986.

Copyright National Electrical Manufacturers Association
Provided by IHS under license with NEMA
No reproduction or networking permitted without license from IHS

Not for Resale

NEMA SG*2 93 ■ 6470247 0504618 115 ■

Section 48
GUIDE FOR APPLICATION, OPERATION, AND MAINTENANCE

48.1 APPLICABLE ANSI STANDARD

Applicable ANSI Standard, American National Standard C37.48 is to be replaced in its entirety by the following.

Authorized Engineering Information 8-20-1986.

48.2 SCOPE

This section applies to high-voltage fuses (above 1000* volts), distribution enclosed single-pole air switches, fuse disconnecting switches, and accessories for alternating-current distribution systems as follows:

1. Enclosed, open and open-link types of distribution cutouts and fuses
2. Distribution current limiting fuses
3. Distribution oil cutouts
4. Distribution enclosed single-pole air switches
5. Power fuses including current limiting types
6. Outdoor and indoor fuse disconnecting switches
7. Fuse supports, fuse mountings, fuse hooks, fuse tongs, and fuse links, all of the type used exclusively with products listed in (1) through (6), above
8. Removable switch blades for products listed in (1) through (3), above

*Included are fuses, rated 601 to 1000 volts which were designed and tested prior to 1985.

Authorized Engineering Information 8-20-1986.

48.3 GENERAL

The application, operation, and maintenance of equipment covered by this standard is the responsibility of the user who is expected to take into account his own particular requirements. As an aid in obtaining satisfactory performance of equipment, this standard provides a general guide on some of the more important features of the above functions for normal conditions of service; unusual conditions may require special measures.

Although fuses are single phase devices, they can be applied to single and/or three phase equipments or lines; however, characteristics of the power system should be considered when selecting all fuses.

A fuse, when applied in an electric circuit within the limits of its ratings, protects the circuit. Its primary function is to isolate faulty equipment from the system. When applied with other equipment in a coordinated over-current protection scheme, it may also limit service interruptions to only a predetermined section of a power system. In many applications, it is possible that the equipment connected to the system can be protected from excessive damage. In this latter application, the primary function is to remove the faulted equipment from the system, and the secondary function is to minimize the damage to the connected equipment as much as possible, considering the varying fault or overload circumstances that can occur.

Fuse performance depends upon the integrity with which it was manufactured, the correctness of its application, and the attention it receives after it is installed. If not properly applied and maintained, it might fail to perform when required, which might result in considerable damage to costly equipment or extensive interruptions in service.

It cannot be stressed too strongly that prescribed safety rules and manufacturers' recommendations and instruction should be adhered to at all times when operating or maintaining these devices near energized equipment or conductors. This is especially true for devices where air insulated blades, insulating barriers or liners or fuses are removed or replaced while mating contacts are energized.

Authorized Engineering Information 8-20-1986.

48.4 APPLICATION

48.4.1 Usual Service Conditions

Usual service conditions conforming to this standard are defined in ANSI C37.40, paragraph 2.1. These conditions specify limits in altitude and ambient temperature.

Authorized Engineering Information 8-20-1986.

48.4.2 Unusual Service Conditions

Unusual service conditions are defined in ANSI C37.40, paragraph 2.2 which gives examples of such conditions. Table 1 of ANSI C37.40 lists altitude correction factors for rated voltage, rated continuous current, and ambient temperature for altitudes above 1,000 m (3,300 ft.).

Authorized Engineering Information 8-20-1986.

Copyright National Electrical Manufacturers Association
Provided by IHS under license with NEMA
No reproduction or networking permitted without license from IHS
Not for Resale

48.5 CLEARANCES AND SPACINGS

Minimum electrical spacings and clearances for power fuse and disconnecting switch installations shall be in accordance with Table 7, 8, and 9 of ANSI C37.46. The application shall recognize the conditions prevalent during proof testing (per ANSI C37.41) and conform to the test clearances and conditions as a minimum, unless the manufacturer prescribes the minimum clearances to be observed.

NEMA Standard 8-20-1986.

Vented fuses should be provided with adequate clearances in the direction or directions in which they are vented, and facilities should be provided to insure that operators are not exposed to fuse discharges either during replacement or when working in the area. If this is not possible, the circuit should be de-energized.

Clearances for oil cutouts are generally dictated by type of cable connection and should be in accordance with manufacturer's recommendations.

Authorized Engineering Information 8-20-1986.

48.6 POSITION ON CROSSARM

The positioning of the fuses on a pole or crossarm should be such that their operation is facilitated. Fuses that are far out on a crossarm should open in a plane that is inclined toward the pole, rather than in a plane that is perpendicular to the crossarm.

Authorized Engineering Information 8-20-1986.

48.7 NOISE LEVEL

Venting type fuses may produce intense short time noise levels during fault interrupting. The height, location, and exhaust control of vented fuses should be such as to minimize the noise level at any location normally occupied by personnel.

Authorized Engineering Information 8-20-1986.

48.8 FACTORS IN SELECTION OF FUSE VOLTAGE

The selection of the proper voltage rating for power fuses, distribution cutouts, or distribution current limiting fuses, is based on consideration of the following system parameters:

1. Maximum system line-to-line or line-to-ground normal frequency recovery voltage
2. System neutral grounding
3. Single or three-phase circuits

Authorized Engineering Information 8-20-1986.

48.8.1 Guide for Selection of Fuse Voltage Rating

48.8.1.1 Power Fuses (including current limiting types)

The fuse should have a maximum voltage rating equal to or exceeding the maximum system line-to-line voltage. *NOTE:* Most power fuses are used in three phase applications.

When used in single phase line-to-ground circuits, the fuse should have a maximum voltage rating at least 1.15 times maximum system line-to-ground voltage or used so that fault currents do not exceed 0.87 times the fuse rated interrupting current.

Authorized Engineering Information 8-20-1986.

48.8.1.2 Distribution Fuses (cutouts and distribution current limiting types)

48.8.1.2.1 Ungrounded-Neutral Systems or Systems Having Grounding Less Effective than Solidly Grounded Neutral (multigrounded) System

A single-voltage-rated distribution fuse should have a maximum voltage rating equal to or exceeding the maximum system line-to-line voltage. A slant-voltage-rated (multiple-voltage-rated) cutout should have a maximum voltage rating to the left of the slant equal to or exceeding the maximum system line-to-line voltage.

Authorized Engineering Information 8-20-1986.

48.8.1.2.2 Solidly-Grounded-Neutral (multigrounded) Systems

48.8.1.2.2.1 Single-Voltage-Rated Distribution Fuses

1. In single-phase, line-to-neutral circuits, the fuse should have a maximum voltage rating equal to or exceeding the maximum system line-to-ground voltage, and a basic insulation level (BIL) coordinated with the line-to-ground insulation of other connected apparatus.
2. In three-phase circuits where multiphase faults not involving ground can occur, the fuse should have a maximum voltage rating equal to or exceeding the maximum system line-to-line voltage.
3. In three-phase circuits where multiphase faults not involving ground cannot occur or are unlikely (for example, where phase isolation is employed as in underground or cubicle construction), and the fuse is not required to protect transformers against secondary faults of the types which would impose greater than line-to-ground recovery voltage, the fuse may have a maximum voltage rating equal to or exceeding the maximum system line-to-ground voltage, and should have a basic insulation level

Copyright National Electrical Manufacturers Association
Provided by IHS under license with NEMA
No reproduction or networking permitted without license from IHS
Not for Resale

(BIL) coordinated with the line-to-ground insulation of other connected apparatus. A backup device may be required to clear such faults, should they occur.

Authorized Engineering Information 8-20-1986.

48.8.1.2.2.2 SLANT-VOLTAGE-RATED (Multiple-Voltage-Rated) CUTOUTS

1. In single-phase, line-to-neutral circuits, the cutout should have a maximum voltage rating to the left of the slant equal to or exceeding the maximum system line-to-ground voltage.
2. In three-phase circuits, the cutout should have a maximum voltage rating to the right of the slant equal to or exceeding the maximum system line-to-line voltage. Some of the criteria for using slant-voltage-rated cutouts in three-phase circuits are:
   a. Three-phase faults not involving ground, which impose 87 percent of line-to-line voltage across the first cutout to clear, seldom occur. Operation of a backup device may be required to clear such faults, but experience indicates such cases are rare.
   b. Phase-to-phase faults not involving ground generally cause two cutouts to operate in series to clear the fault. Even with differences in fuse-link melting time, both cutouts work together to clear high-current faults. On medium-current faults, the possibility exists of load current continuing to flow through one of the cutouts, after fault clearing by series operation of the two cutouts. Operation of backup devices may be required if the cutout does not clear the continuing load current, but experience indicates that such cases are extremely rare.
   c. The maximum current to be cleared by one cutout operating alone at line-to-line voltage is limited to approximately the one cycle melting current of the fuse link in the second cutout involved. Slant-voltage-rated cutouts will generally clear such relatively low currents at full line-to-line recovery voltage.
   d. The basic impulse insulation level (BIL) of a slant-voltage-rated cutout should be coordinated with the line-to-ground insulation of other connected apparatus. Consideration should also be given to service conditions listed in ANSI C37.40 Paragraph 2, as they apply to dielectric strength.
   e. Manufacturer's recommendations should be followed on the suitability of particular slant-voltage-rated cutouts for three-phase application.

Authorized Engineering Information 8-20-1986.

48.8.1.3 ALL SYSTEMS

Expulsion fuse voltage ratings may exceed the system voltage by any desired amount. Care should be taken in applying current limiting fuses with higher voltage ratings than the system voltage. Current limiting fuses can produce peak arc voltages higher than the fuse voltage rating. These over-voltages should not exceed system BIL. The sparkover voltage of source side connected surge arresters should be considered. The fuse manufacturer's recommendations should be followed in this regard.

Authorized Engineering Information 8-20-1986.

48.9 SELECTION OF INTERRUPTING RATING

The interrupting rating of the fuse should be equal to or greater than the maximum fault current available on the load side of the fuse. With fuse interrupting ratings in symmetrical amperes, they are directly comparable to the calculated fault current value.

Fuses will interrupt asymmetrical fault currents associated with specified X/R ratios. These ratios are generally higher than experienced on actual power systems, so no derating is generally required. For the rare cases where system X/R is higher than that specified for fuse testing, derating may be necessary. The fuse manufacturer should be consulted.

Authorized Engineering Information 8-20-1986.

48.10 SELECTION OF CONTINUOUS CURRENT RATING

48.10.1 General

There are no generalizations as to the selection of a current rating for a high-voltage fuse since there are radically different objectives for using a fuse as an overcurrent protective device, such as, the type and rating of the equipment being protected, the nature of the loads imposed by the equipment or circuits, special operating practices of the user such as loading of transformers, special operating requirements of the user such as the ability to withstand cold load pick-up after extended outages, and coordination with other series protective devices.

This guide, therefore, will present a listing of the most commonly used applications for high-voltage fuses together with the objectives that are required and can be achieved with proper fuse ampere rating and time current characteristic (TCC) selection.

Authorized Engineering Information 8-20-1986.

Copyright National Electrical Manufacturers Association
Provided by IHS under license with NEMA
No reproduction or networking permitted without license from IHS
Not for Resale

48.10.1.1 PRIMARY DISTRIBUTION SYSTEM

48.10.1.1.1 FUSES FOR DISTRIBUTION TRANSFORMERS (RESIDENTIAL, INDUSTRIAL, INSTITUTIONAL, COMMERICAL)

Fuses for distribution transformers should accomplish the following:

a. Protect the distribution system from faults at or within the transformer, and coordinate with the next upstream overcurrent protective device up to the maximum fault current available at the transformer fuse.
b. Provide maximum protection to the transformer from through faults, with the degree of transformer protection determined by comparing the appropriate time-current curve for the fuse selected with the appropriate transformer short-time loading curve; both curves need to be properly adjusted to reflect differences between primary and secondary phase currents and winding currents associated with the specific transformer connection involved and the type of possible faults in the secondary circuit.
c. Provide earliest possible detection and clearing of internal transformer faults.
d. Permit loading the transformer to the maximum loading practice of the user.
e. Withstand combined transformer magnetizing inrush and load pickup current after short-time (up to 1 minute) or extended time (30 minutes and longer) outages.
f. Properly coordinate with over-current protection devices on the secondary of the transformer.
g. For small residential transformers (25 kVA and lower), withstand surge discharge through a grounded primary winding whose magnetic circuit has become saturated by a long-time lightning-induced surge.
h. For residential transformers with a fuse located ahead of a surge arrester at the tranformer, withstand the potential surge current that may be discharged through the arrester.

Authorized Engineering Information 8-20-1986.

48.10.1.1.2 FUSES FOR SHUNT CAPACITOR BANKS

Fuses for shunt capacitor banks should accomplish the following:

a. Protect the distribution system from major faults at or within the capacitor bank, and coordinate with the next upstream overcurrent protective device up to the maximum fault current available at the capacitor bank fuse.
b. Provide earliest possible detection of internal faults in individual capacitor units.
c. Permit loading associated with: larger-than-rated capacitance of units; operating voltage in excess of nameplate rating; and presense of harmonic currents.
d. Operate, when one unit in one phase of an ungrounded wye-bank becomes faulted, within a time span that will not damage capacitor units in the unfaulted phases due to their operating at 1.73 times rated voltage for the duration of the fault.
e. Withstand transient currents from the distribution system and from adjacent banks. Withstand or operate (user choice) on discharge current from the capacitor bank into a fault on the distribution circuit near the capacitor bank.

Authorized Engineering Information 8-20-1986.

48.10.1.1.3 FUSES FOR RECLOSER OR CIRCUIT BREAKER BY-PASS

Fuses for recloser or circuit breaker by-pass should accomplish the following:

a. Protect the substation transformer from feeder faults in the zone from the bypassed device to the next main circuit downstream overcurrent protective device, and coordinate with the next upstream overcurrent protective device up to the maximum through fault current available at the bypass fuse.
b. Permit loading of the feeder to the maximum loading practice of the user.
c. Properly coordinate with main circuit downstream overcurrent protective devices.

Authorized Engineering Information 8-20-1986.

48.10.1.1.4 FUSES FOR SECTIONALIZING

Fuses for sectionalizing should accomplish the following:

a. Protect conductors from burn-down or extreme heating in the zone from the sectionalizing fuse to the next main circuit downstream overcurrent protective device, and coordinate with the next upstream overcurrent protective device up to the maximum fault current available at the sectionalizing fuse.
b. Permit loading of the circuit to the maximum loading practice of the user.
c. Properly coordinate with main circuit downstream overcurrent protective devices.

48.10.1.2 SUBTRANSMISSION SYSTEM

48.10.1.2.1 FUSES FOR DISTRIBUTION SUBSTATION TRANSFORMER PRIMARY

Fuses for distribution substation transformer primaries should accomplish the following:

Copyright National Electrical Manufacturers Association
Provided by IHS under license with NEMA
No reproduction or networking permitted without license from IHS
Not for Resale

NEMA SG*2 93 ■ 6470247 0504622 646 ■

a. Protect the substation bus from faults at or within the transformer, and coordinate with all upstream overcurrent protective devices up to the maximum fault current available on the substation bus.
b. Provide maximum protection to the transformer from through faults, with the degree of transformer protection determined by comparing the appropriate time-current for the fuse selected with the appropriate transformer short-time loading curve; both curves need to be properly adjusted to reflect differences between primary and secondary phase currents and winding currents associated with the specific transformer connection involved and the types of possible faults in the secondary circuit.
c. Provide earliest possible detection and clearing of internal transformer faults.
d. Permit loading the transformer to the maximum loading practice of the user.
e. Withstand combined transformer magnetizing inrush and load pickup current after short-time (up to 1 minute) voltage interruption on the substation bus.
f. Properly coordinate with overcurrent protective devices on the secondary of the transformer.

Authorized Engineering Information 8-20-1986.

48.10.1.2.2 FUSES FOR SUBSTATION SHUNT CAPACITOR BANKS

Fuses for substation capacitor banks should accomplish the following:

a. *Bank Fuses*

1. Protect the substation bus from faults at the capacitor bank, and coordinate with all upstream overcurrent protection devices up to the maximum fault current available at the substation bus;
2. Permit maximum normal loading associated with: larger-than-rated capacitance of units, operating voltage in excess of nameplate rating, and presence of harmonic currents;
3. Withstand energizing transient currents from the source(s) and from other energized capacitor banks connected to the substation bus.

Authorized Engineering Information 8-20-1986.

b. *Capacitor Unit Fuses*

1. Provide earliest possible detection of internal faults in individual capacitor units;
2. Permit maximum normal loading associated with: larger-than-rated capacitance of units, operating voltage in excess of nameplate rating, and presence of harmonic currents;
3. Withstand discharge transient current from an individual capacitor unit into an adjacent faulted unit within the same parallel-capacitor group;
4. Withstand currents 10 percent greater than maximum normal loading in the remaining capacitor units within a group of parallel units, until phase unbalance is detected and the capacitor bank de-energized.

Authorized Engineering Information 8-20-1986.

48.11 FUSE TO FUSE COORDINATION PROCEDURE

For the fuses on an electrical system to operate properly and provide the desired system protection, consideration of voltage, continuous current, and interrupting ratings is not sufficient to select the proper fuse for a particular application. One should also ensure that the fuse being selected will operate correctly relative to the other fuses being used. The procedure by which this is accomplished is called the fuse to fuse coordination procedure.

The information required to select fuses that coordinate with one another is usually provided in the form of two curves related to the melting and clearing characteristics of the fuse. The minimum melting time-current curve shows the minimum time, expressed in seconds, required to melt the fusible element(s) for a particular value of symmetrical sinusoidal current. The total clearing time-current curve shows the maximum time, expressed in seconds, to complete current interruption at a particular value of symmetrical current. Both curves take into account variations resulting from manufacturing tolerances and represent performance under specific conditions (refer to ANSI/IEEE C37.41-1981).

On both the minimum melting and total clearing time-current curves for current-limiting fuses, current can usually be determined for times as short as .01 seconds. However, as noncurrent-limiting fuses do not clear in less than one loop of fault current, the total clearing curves for these fuses show a constant value of time for all currents that produce melting in less than one loop (i.e., approximately 0.8 of a cycle for typical X/R values).

Characteristic information for current-limiting fuses for times less than .01 seconds is often provided in terms of I^2T (strictly the integral $i^2 \sim dt$). Data on the minimum melting I^2T and total clearing I^2T can be presented either in tabular form or as curves showing I^2T as a function of the available fault current. As a fuse's melting time decreases, its melting I^2T approaches a fixed value which is a function of the fusible element material and geometry.

To properly coordinate noncurrent-limiting fuses keep the minimum melting curve of the upstream fuse above and to the right of the total clearing curve of any downstream noncurrent-limiting fuse within the range of

Copyright National Electrical Manufacturers Association
Provided by IHS under license with NEMA
No reproduction or networking permitted without license from IHS
Not for Resale

fault currents available at the downstream fuse. In order to allow for variables such as preloading and ambient temperature variations, there are two commonly used techniques. One is to allow a 10 percent safety margin in current for any value of time. The other utilizes a 25 percent margin in time for any value of current.

Coordination involving current-limiting fuses is dependent upon the type(s) of current-limiting fuse(s) under consideration. There are two basic types of current-limiting fuses: general purpose and back-up.[1] If a general purpose fuse is used, the coordination can be done in a similar fashion as described previously for non-current-limiting fuses. However, for melting and clearing times, less than .01 seconds, minimum melting I^2T and clearing I^2T data should be compared to be certain that the desired coordination has been achieved.[2]

Authorized Engineering Information 8-20-1986.

48.12 VOLTAGE WITHSTAND ON BLOWN FUSES

Typically, fuse cutouts are designed to incorporate a drop open action following an interrupting operation. This action quickly removes all voltage stress across the fuse holder. Many applications of non-drop open fuses, such as the back-up current limiting type, utilize a series expulsion fuse or other device coordinated to provide isolation means and prevent dielectric breakdown of a contaminated fuse if subjected to long time voltage stress. For those applications where long time voltage stress can occur across a blown fuse, and dielectric breakdown would permit current flow, the fuse manufacturer should be consulted as to the adequacy of his product for the proposed application.

Authorized Engineering Information 8-20-1986.

48.13 MARKING OF SPARE FUSES AND PARTS

If several types and ratings of fuses are used in a given location, spare fuse units should be suitably marked, coded or indexed to show the mountings, circuits or equipment with which they are to be used, thus minimizing the possibility of improper application.

Authorized Engineering Information 8-20-1986.

48.14 OPERATION

48.14.1 Operating Speed

Any of the devices which are used to disconnect or close an energized circuit should be operated in a rapid, positive manner since the success of this function may be dependent upon the use of proper procedure and technique as established by the manufacturer.

Authorized Engineering Information 8-20-1986.

48.14.2 Locking or Latching of Fuses, Blades or Links in Closed Position

Special care should be taken to see that the fuse, blade or link is securely locked, latched or held fast in the closed position as recommended by the manufacturer. The fuse carrier assembly of distribution oil fuse cutouts or other devices applied in sealed enclosures should be locked and sealed; therefore, the sealing gaskets should be maintained in good condition for satisfactory operation.

Authorized Engineering Information 8-20-1986.

48.14.3 Replacement of Fuses

48.14.3.1 Fuses Subject to Partial Melting or Melting or Deterioration

Fuses may be subject to partial melting or damage by current that is not of sufficient magnitude and duration to cause total melting of the fuse. For such fuses it is important that the following precautions be observed:

1. In two or three phase applications it is advisable to replace the fuse units (or fuse links) in all phases when the fuses in one or more phases are found to have blown, unless (a) the manufacturer's instructions are followed for determining the suitability of the fuse(s) for continued service, or (b) there is proof that no damaging current occurred in the remaining phase(s).
2. In applications where these fuses are used in series with other fuses or interrupting devices in the same phase in such a manner that their melting and/or clearing curves cross one another, after an operation, it is advisable to carefully follow the manufacturer's instructions for determining the suitability of the fuse(s) for continued service.

Authorized Engineering Information 8-20-1986.

---

[1] When a back-up current-limiting fuse is used, another protective device is used to clear all currents below the specified minimum interrupting current rating of the back-up fuse. This is accomplished by making certain that the crossover of the other protecting device's total clearing time-current curve occurs above the minimum interrupting current rating of the back-up fuse, but below the maximum interrupting current rating of the other protecting device.

[2] One method for coordinating back-up fuses is referred to as matched melt coordination and is used when the other protecting device is an expulsion fuse. With this method, the expulsion fuse always melts providing isolation of the back-up fuse after fault interruption. Coordination exists when the expulsion fuse's melting I^2T is less than or equal to the melting I^2T of the back-up current-limiting fuse for all currents. To assure this condition, refer to manufacturer's recommendations.

Copyright National Electrical Manufacturers Association
Provided by IHS under license with NEMA
No reproduction or networking permitted without license from IHS
Not for Resale

NEMA SG*2 93 ■ 6470247 0504624 419 ■

48.14.3.2 RE-ENERGIZATION AFTER FUSES HAVE OPERATED

It is advisable to locate and correct the situation which caused the fuse to operate before re-energizing. The operator should be aware that a potential hazard may exist if the circuit is re-energized with the fault condition still present.

Authorized Engineering Information 8-20-1986.

48.14.3.3 REPLACING FUSES ON CAPACITOR INSTALLATIONS

Fuses used on capacitors should not be removed or replaced by hand unless due precautions are taken beforehand to discharge and ground the capacitors.

Capacitors used in power applications have a discharge resistor to reduce the voltage to a specified value in a specified time after being disconnected.

The internal discharge device provided in capacitors should not be considered as a substitute for the recommended safety practice of manually discharging the residual stored charge before working on capacitors. Capacitors can be damaged if discharged too soon after de-energization. It is recommended that at least 5 minutes be allowed for discharge through the discharge resistor and then the capacitor terminals be connected together and grounded. Refer to ANSI C55.1-1984 for complete information in regard to discharging of capacitor units.

The entire capacitor bank should be disconnected and grounded while replacing the fuses, unless the fuse link and/or its mounting can be removed safely and completely from the circuit using hot line tools.

Authorized Engineering Information 8-20-1986.

48.14.3.4 REPLACING OF VENTED FUSES

If the replacing of vented fuses must be done from within the venting area, the circuit should be de-energized during the replacement procedure. When vented fuses, which are operable from outside their vented area, must be replaced without de-energizing the circuit, the use of hearing protectors should be considered.

Authorized Engineering Information 8-20-1986.

48.14.3.5 REPLACING OF NON-VENTED FUSES OF THE CURRENT LIMITING TYPE

High-voltage current-limiting fuses should be handled with at least the same degree of care as any other precision-made item of equipment (such as a relay). These fuses should be stored in their protective packaging until required for use. Any fuse dropped or otherwise subjected to severe mechanical shock should be checked before use. The check should include an inspection for damage of the fuse barrel and metal parts and a resistance check. A nominal resistance value may usually be obtained from the fuse manufacturer.

Authorized Engineering Information 8-20-1986.

48.14.3.6 REPLACEMENT OF EXHAUST CONTROL DEVICES

Expulsion fuses used in FEP enclosures, types 1, 2 or 3 (refer to 48A.2.2) shall always be equipped with condensers or mufflers.

NEMA Standard 8-20-1986.

These exhaust control devices may be reusable to some extent dependent upon the magnitude of and number of fault current interruptions they have endured. It is advisable, after the operation of a fuse so equipped, to inspect the exhaust control device and follow carefully the manufacturer's instructions for determining the suitability of the exhaust control device for further service.

Authorized Engineering Information 8-20-1986.

48.15 OPERATION OF ENERGIZED FUSES

48.15.1 Mechanical Stress Withstand

If a current-limiting fuse during normal installation and service will be subjected to severe mechanical stresses, shock, vibration, and such, in different directions, it should be verified that the fuse can withstand these stresses without damage or deterioration. If damaging conditions are suspected, the fuse should not be installed.

Authorized Engineering Information 8-20-1986.

48.15.2 Opening a Circuit

When a fuse or fused equipment not provided with a load-break device is used to energize a circuit following fuse replacement, it should not be opened unless the fuse has blown or the circuit has been de-energized.

Authorized Engineering Information 8-20-1986.

48.15.3 Energizing a Circuit

When a fuse or fused equipment with a load-break device is used to energize a circuit following fuse replacement, it should not be reopened immediately. The time delay before reopening will vary considerably, depending upon the continuous current rating of the fuse, but should be adequate to allow the fuse to interrupt any existing fault current which might exceed the load-break rating of the device. For large size fuse links above 100 amperes, this time delay could be as long as 10 minutes.

Authorized Engineering Information 8-20-1986.

48.16 OPEN FUSE HOLDER

Outdoor fuses should not be left hanging in the open position for an extended period of time. If they are left

Copyright National Electrical Manufacturers Association
Provided by IHS under license with NEMA
No reproduction or networking permitted without license from IHS
Not for Resale

this way, they should be inspected to ensure that there is no water damage or that no warpage has occurred prior to reclosing into the circuit.

Authorized Engineering Information 8-20-1986.

48.17 USE OF NON-EXPENDABLE CAP ON EXPENDABLE CAP CUTOUTS

Installation of non-expendable cap on an expendable cap cutout results in a reduction of the expendable cap cutout interrupting capability.

Refer to manufacturer's instructions as to the reduction in rating.

Authorized Engineering Information 8-20-1986.

48.18 STORING SPARE FUSE UNITS AND REPLACEABLE PARTS

Spare fuse units and replaceable parts of fuse units should be stored in such a manner that they will not be damaged, and will be readily available when needed.

Authorized Engineering Information 8-20-1986.

48.19 MAINTENANCE

48.19.1 Safety Precautions

Examination and maintenance of equipment which is connected to an energized circuit should be done at a safe distance from any exposed energized parts of equipment or conductors, or the circuit and equipment should be de-energized. In the case of equipment on capacitor installations, precautions should be taken to discharge the capacitors after de-energization. Alternatively, live line techniques may be employed if they are adequate to ensure safety to personnel.

Authorized Engineering Information 8-20-1986.

48.19.2 Inspection of Air Insulated Fused or Switching Devices

Equipment within the scope of this guide usually consists of several parts, some current carrying and some non-current carrying, all subject to atmospheric and other environmental conditions. The equipment is also subject to the normal and abnormal operating conditions of the system in which it is connected. The frequency and completeness of inspection will necessarily be a function of the service reliability required and the conditions at the specific equipment location and must be determined by the user. Some of the items that should be considered are as follows:

1. The equipment should be given a general examination for obvious defects and bolts, nuts, washers, pins and terminal connectors should be checked to ensure that they are securely in place and in good condition.
2. Insulators and other porcelain or plastic parts should be inspected for breaks, cracks, burns or contamination. Insulators and other insulating surfaces should be cleaned of any excessive contamination such as salt deposits, cement or road dust, and such, to avoid flashover as a result of the accumulation of foreign substances on their surfaces. Cracked or broken insulators and other insulating parts should be replaced. Consideration should be given to replacing badly burned insulating parts in order to prevent flashover.
3. Current contact surfaces should be examined for pitting, burning, alignment, and to ensure that the contacts when closed are held together with adequate pressure. Badly pitted, burned or distorted contacts should be replaced. Alignment and spring pressure should be adjusted if required.
4. When present, vent holes should be examined to ensure that they are not plugged with dirt or other foreign substances, and cleaned out if necessary.
5. If applicable to the equipment, the fuse unit or fuse tube and renewable element should be examined for corrosion of the fuse element or connecting conductors, excessive erosion of the inside of fuse tubes, tracking and dirt on the outside of the fuse tube, and improper assembly that may prevent proper operation. Components showing significant signs of deterioration should be replaced. Fuse tubes made of organic material may be refinished according to manufacturer's specifications.
6. Current carrying parts such as blades or fuse links should be examined for thermal damage resulting from heavy short circuit currents or overloads. Damaged fuse links and other parts significantly deformed should be replaced.
7. The mechanical operation should be checked per manufacturer's recommendations.

Authorized Engineering Information 8-20-1986.

48.19.3 Periodic Inspection of Fuse Links in Distribution Cutouts

Fuse links in distribution cutouts may require periodic replacement, since corrosion of the lower terminal of the fuse link (generally a flexible cable) at the lower open end of the fuse holder may cause breakage or melting at this point rather than at the current-responsive element. Link-break cutouts are more susceptible to this problem because of the mechanical strain placed upon the fuse link by the link-break mechanism.

Authorized Engineering Information 8-20-1986.

Copyright National Electrical Manufacturers Association
Provided by IHS under license with NEMA
No reproduction or networking permitted without license from IHS
Not for Resale

NEMA SG*2 93 ■ 6470247 0504626 291 ■

48.19.4 Inspection of Distribution Oil Fuse Cutouts

In addition to Items 48.19.2 (1 through 7), the following items should be included:

1. Periodically, a sample of the insulating oil should be taken and tested for dielectric breakdown strength. Oil in cutouts which experience regular load break or fuse interrupting duty should be tested on a more frequent basis.
2. The fuse carriers of non-vented Distribution Oil Fuse Cutouts generally incorporate insulating materials which may be damaged dielectrically by excessive exposure to moisture or humid atmosphere. The cutout should be kept sealed or the components and oil suitably protected from the contaminating exposure.
3. The fuse elements of these cutouts are generally not interchangeable and any substitution for the manufacturer's fuses may seriously affect the interrupting characteristics of the device.
4. The cutouts should be examined for any evidence of oil leakage and the prescribed oil level should be maintained.
5. Movable bearing gasket surfaces, yoke compression, and interlocking features should be checked for satisfactory operation.

Authorized Engineering Information 8-20-1986.

Copyright National Electrical Manufacturers Association
Provided by IHS under license with NEMA
No reproduction or networking permitted without license from IHS
Not for Resale

Section 48A

GUIDE FOR APPLICATION OF CURRENT LIMITING FUSES IN ENCLOSURES

48A.1 APPLICABLE ANSI STANDARD

At the present time, no ANSI Standard for this section is in print, therefore, the following shall be used until an ANSI Standard is available.

NEMA Standard 8-20-1986.

48A.2 APPLICATION OF CURRENT-LIMITING FUSES IN ENCLOSURES

48A.2.1 General

Many applications require the use of current-limiting fuses in enclosures where the fuse and the associated contacts can be subjected to air temperatures above 40 °C. Other applications can require the fuse to be immersed in a liquid such as transformer oil.Current limiting fuses intended for such service shall comply with the applicable design tests specified in section 41.6 and ANSI C37.47.

NEMA Standard 8-20-1986.

48A.2.2 Tests for Current Limiting Fuses in Enclosures

When current-limiting fuses are applied in enclosures of any type, the performance characteristics of the total system must be evaluated.There are five types of fuse applications covered by this standard:

Type 1

The fuse is mounted in a compartment such that relatively free air circulation exists. Reference ambient temperature is the enclosure air temperature. (Illustration: Live front pad-mounted transformers and vaults.)

Type 2

The fuse is inside a container which has restricted air flow surrounding the fuse, but relatively free air circulation outside of the container. Reference ambient temperature is that of the air outside the container. (Illustration: Fuse inside a canister in a vault.)

Type 3

The fuse is inside a container which has restricted air flow surrounding the fuse, but relatively free liquid flow outside of the container. Reference ambient temperature is that of the liquid outside the container. (Illustration: Fuse inside a canister immersed in transformer oil.)

Type 4

A combination of types (2) and (3) where the container is partially in air and partially in liquid. The reference ambient temperature is that of the liquid outside the container. (Illustration: Fuse inside a transformer bushing.)

Type 5

The fuse is directly immersed in liquid, without the need for separate fuse enclosure, and with relatively free liquid circulating around the fuse. The reference ambient temperature is that of the liquid surrounding the fuse. (Illustration: Oil immersible fuse in transformer or switchgear oil.)

Because the fuse and its enclosure produce a system with interacting effects, and each component could be supplied by a different manufacturer, it is essential that sufficient data is made available to permit proper application. Suitability of a specific application of the fuse in an enclosure shall be the responsibility of the supplier of the fuse enclosure package (FEP).

NEMA Standard 8-20-1986.

NOTE: For Types 1 and 5 the FEP is the Fuse itself; for Types 2, 3, and 4, the FEP is the Container and Fuse combination.

Authorized Engineering Information 8-20-1986.

48A.2.3 Ambient Temperature

The FEP application shall take into consideration any higher operating temperatures caused by fuse confinement or elevated ambient temperatures. The five fuse application descriptions in 48A.2.1 also define the ambient temperature to which reference is made. The supplier of the FEP shall specify the maximum reference ambient temperature (°C) allowable, preferably selected from the 20 series of preferred number. (Typically 56, 63, 71, 80, 90, 100, 112, 125, or 140.)

NEMA Standard 8-20-1986.

48A.2.4 Time Current Characteristics (TCC) Shift

The modification of the thermal environment for the fuse due to an enclosure, and the higher than normal ambient temperatures of the FEP, will cause some shift of the fuse TCC. The largest shift occurs at the long time end.

NOTE: Use of the general rule of thumb coordinating factor, that is maximum clearing time of the load side protective device should not exceed 75 percent of the minimum melt time of the source side device generally provides sufficient allowance for TCC shift in the 0.01-1000 second region.

Authorized Engineering Information 8-20-1986.

Copyright National Electrical Manufacturers Association
Provided by IHS under license with NEMA
No reproduction or networking permitted without license from IHS
Not for Resale

48A.2.5 Derating Factors

Backup type current-limiting fuses that are coordinated with other fuses (or overload sensing devices) intended to operate at low overload currents require no derating factors.

Backup current-limiting fuses that trip an interrupter switch after the fuse element melts, may require a derating factor.

Authorized Engineering Information 8-20-1986.

Application of general purpose current-limiting fuses in enclosures, subject to, or producing high ambient temperatures will result in a reduction of the current required to produce element melting. Because the fuse and enclosure have interacting effects which determine the thermal environment of the fuse, the supplier of the FEP shall provide the long time minimum melting current for each fuse size applied as described in 48A.2.2. This current will be determined at the reference ambient temperature of 25 °C ± 5 °C. Any derating factor so determined will be due to the application of the fuse in the container.

NEMA Standard 8-20-1986.

A second derating factor may be published by the FEP supplier. This factor gives the percent reduction of the long time minimum melting current as related to the reference ambient temperature above the standard 25 °C. When no specific derating factor is provided, the following derating factors for the FEP long time minimum melt current may be used as a guide.

Type (1) 0.4 %/ °C of air temperature above 25 °C
Type (2) 0.4 %/ °C of air temperature above 25 °C
Type (3) 0.2 %/ °C of top oil temperature above 25 °C
Type (4) 0.1 %/ °C of top oil temperature above 25 °C
Type (5) 0.2 %/ °C of top oil temperature above 25 °C

Authorized Engineering Information 8-20-1986.

Copyright National Electrical Manufacturers Association
Provided by IHS under license with NEMA
No reproduction or networking permitted without license from IHS

Not for Resale

APPENDICES*

Appendix A
RECOMMENDED METHODS FOR DETERMINING THE VALUE OF A SINUSOIDAL CURRENT WAVE AND A NORMAL-FREQUENCY RECOVERY VOLTAGE

A1 CURRENT WAVES

A1.1 Classification of Current Waves

The determination of the current interrupted by a circuit-interrupting device involves the measurement of the rms or effective values of sinusoidal waves. These waves may be divided into two groups, those which are symmetrical about the zero axis, and those which are asymmetrical with respect to the zero axis.

A1.2 Symmetrical Sinusoidal Wave

The symmetrical sinusoidal wave has an rms value equal to the peak-to-peak value divided by 2.828. To determine the rms value at a given instant, draw the envelope of the current wave, determine from it the peak-to-peak value at the given instant, and divide by 2.828. See Figure A-1 for example.

A1.3 Asymmetrical Sinusoidal Wave

The asymmetrical sinusoidal wave can be considered to be composed of two components, an alternating component and a direct component.

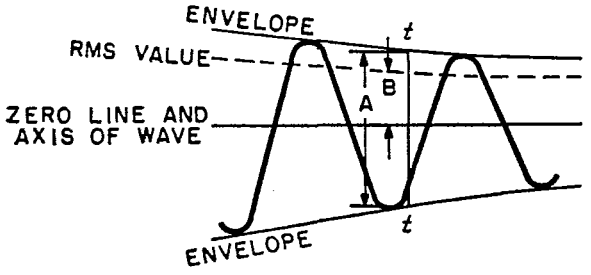

t = time for which measurement was made

A = peak-to-peak value

B = rms value $= \dfrac{A}{2.828}$

Figure A-1
SYMMETRICAL SINUSOIDAL WAVE

A1.3.1 Measurement of the RMS Value

The measurement of the rms value is simplified by this conception of an asymmetrical wave, since the rms value of the wave is a function of these two components.

A1.3.2 Alternating Component

The alternating component has a peak-to-peak value equal to the distance between the envelopes and has an axis midway between the envelopes.

A1.3.3 Direct Component

The direct component has an amplitude equal to the displacement of the axis of the alternating component. See Figure A-2 for example.

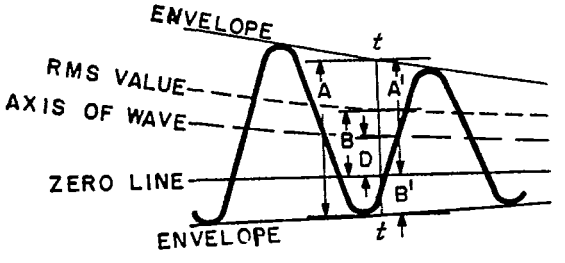

t = time for which measurement is made

A = peak-to-peak value of alternating component

D = direct component

$$B = \text{rms value} = \sqrt{\left(\frac{A}{2.828}\right)^2 + D^2}$$

A' = major ordinate

B' = minor ordinate

$$\text{rms value} = \sqrt{\left(\begin{matrix}\text{rms Value of}\\ \text{Alternating Current}\end{matrix}\right)^2 + \left(\begin{matrix}\text{Direct}\\ \text{Component}\end{matrix}\right)^2}$$

Figure A-2
DIRECT COMPONENT

*Appendixes A and C were compiled, with modifications from ANSI C37.05-1964 (R 1976), *American National Standard Methods for Determining the Values of a Sinusoidal Current Wave and a Normal-Frequency Recovery Voltage for AC High-Voltage Circuit Breakers* and ANSI C37.3-1979, *American National Guide for Calculation of Fault Currents for Application of AC High-Voltage Circuit Breakers Rated on a Total Current Basis.*

Copyright National Electrical Manufacturers Association
Provided by IHS under license with NEMA
No reproduction or networking permitted without license from IHS
Not for Resale

NEMA SG*2 93 ■ 6470247 0504630 712 ■

The direct use of this formula involves a considerable amount of calculation to determine the components and to combine them, but it may be used to develop tables, charts, and scales by which the effective values are easily and quickly obtained.

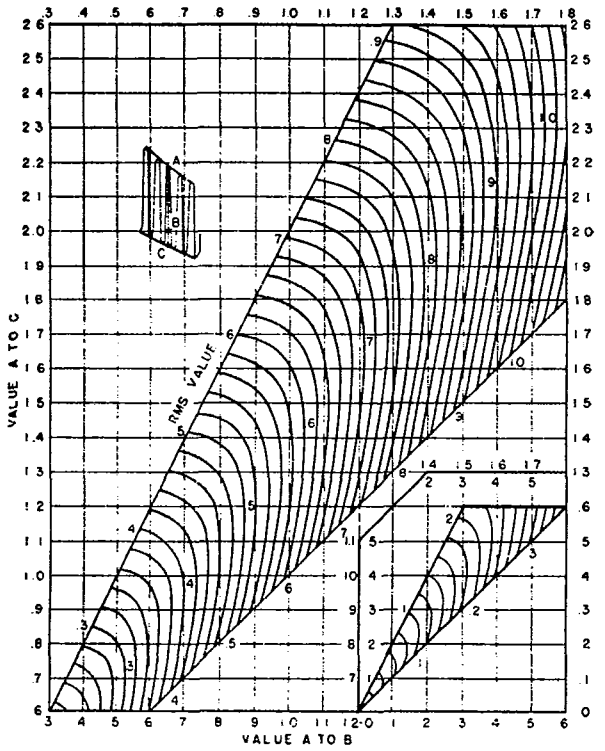

Figure A-3
CHART FOR DETERMINING THE RMS VALUE OF AN ASYMMETRICAL SINUSOIDAL WAVE

A1.3.4 Chart for Determining RMS Value

A chart which gives the rms value of the asymmetrical wave in terms of the peak-to-peak and maximum values is shown in Figure A-3. These two values are read on an oscillogram. The point, whose abscissa is the maximum value of the wave and whose ordinate is the peak-to-peak value, indicates the rms value of the asymmetrical wave. This value is multiplied by the scale of the oscillogram.

A1.3.5 Scale for Determining RMS Value

A transparent scale which can be laid over an asymmetrical sine wave and used for reading the rms value directly is shown in Figure A-4. The scale is placed over the wave with the line X–X′ parallel to the zero line and with the upper and lower edges of the scale passing through the points on the envelopes of the sinusoidal wave corresponding to the instant at which the rms value is to be obtained. The point on the zero line of the wave, corresponding to the instant at which the rms value is to obtained, then indicates the rms value on the scale. The scale in Figure A-4 is full size and is read in inches. The rms value is multiplied by the scale of the oscillogram.

A1.3.6 RMS Value for Currents of Less than One Cycle Duration

The current to be measured may flow for less than 1 cycle and make it impossible to determine the envelope of the current wave by inspection of the oscillogram. Such currents can occur with fuses, breakers operating on low-frequency circuits, breakers which have started open before the fault develops, or breakers pre-tripped on test. The rms value of the displaced sine wave integrated over complete cycle may be determined from the amplitude of the single loop, its duration, and curve M of Figure A-5. In some cases, the rms value of the current for the fraction of a cycle for which the current actually flowed may be desired. It may be determined from the amplitude of the single loop, its duration, and curve N of Figure A-5.

Copyright National Electrical Manufacturers Association
Provided by IHS under license with NEMA
No reproduction or networking permitted without license from IHS
Not for Resale

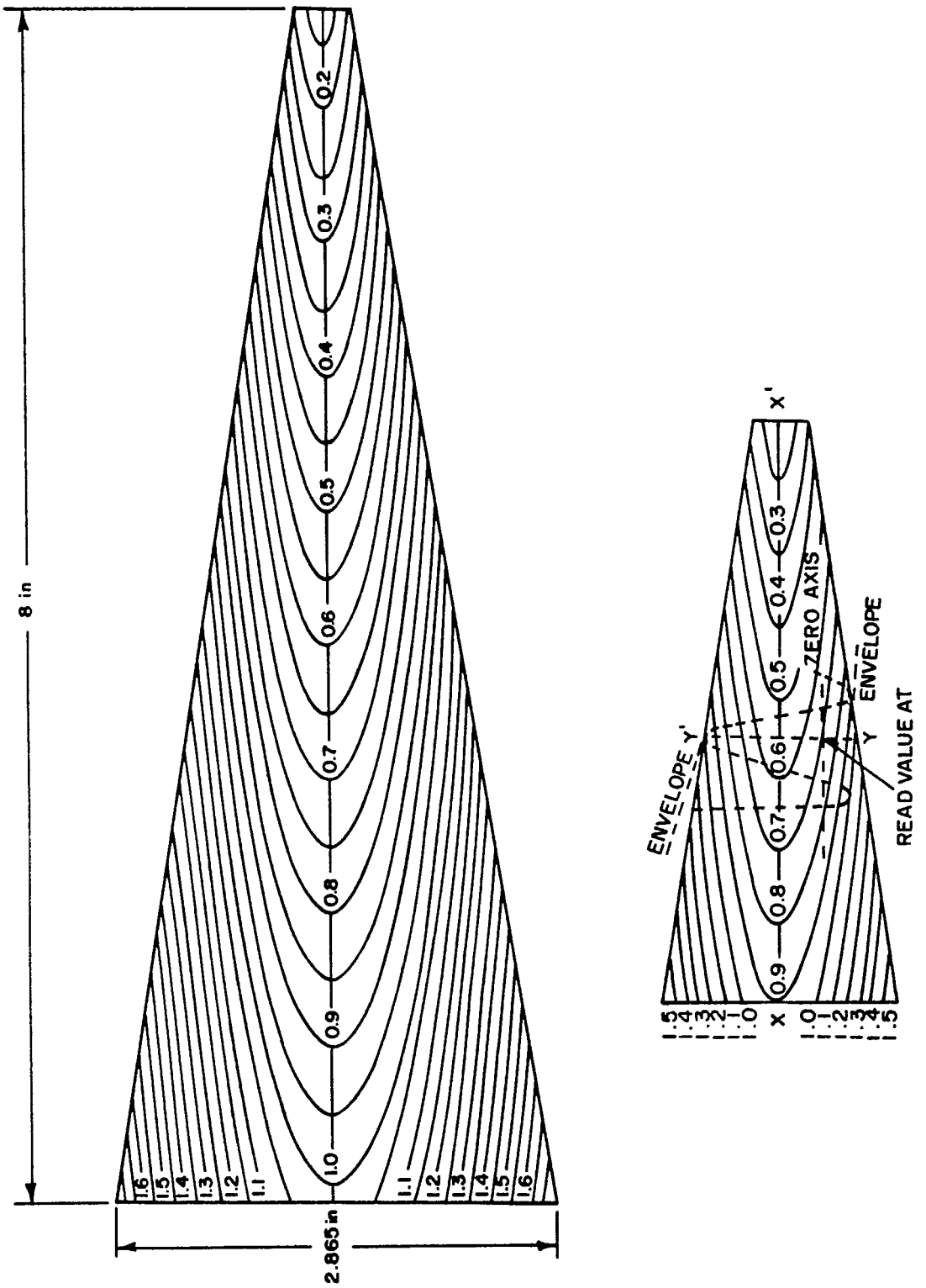

NOTE: Center line X—X' of scale parallel to zero axis of wave. Y—Y' instant for which current is to be determined.

Figure A-4
A SCALE FOR MEASURING THE RMS VALUE OF AN ASYMMETRICAL SINUSOIDAL WAVE

Copyright National Electrical Manufacturers Association
Provided by IHS under license with NEMA
No reproduction or networking permitted without license from IHS
Not for Resale

NEMA SG*2 93 ■ 6470247 0504632 595 ■

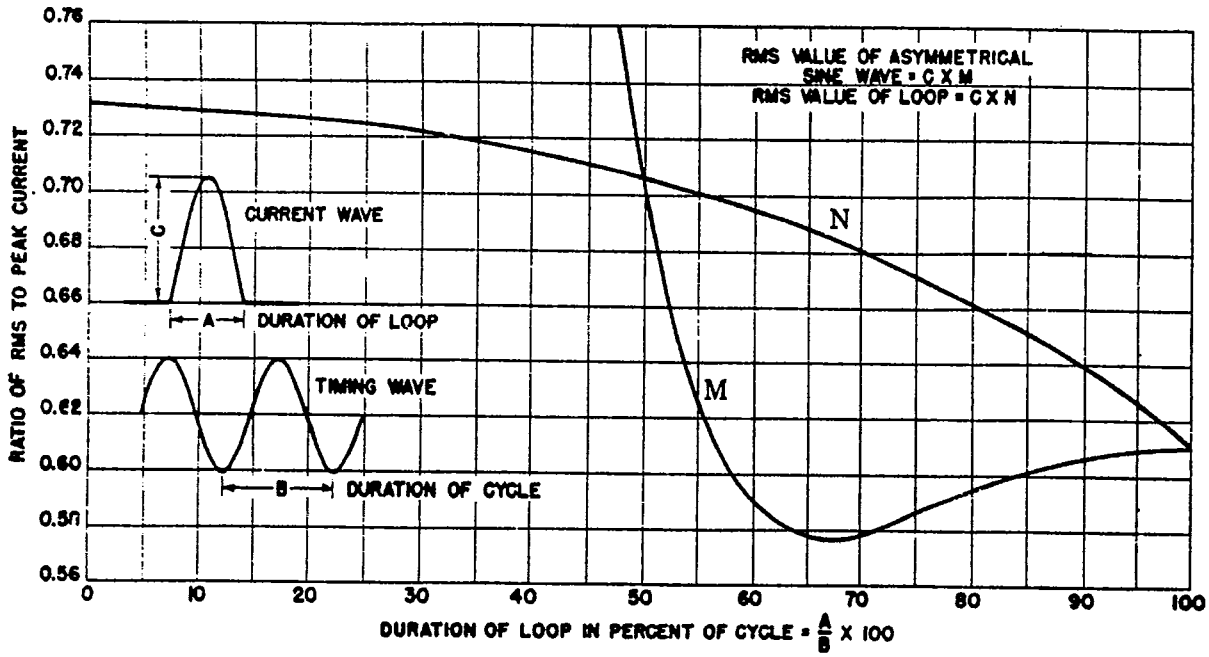

NOTE: The curves are based on the assumption of no decrement in the wave.

Figure A-5
CURVES FOR DETERMINING FROM A SINGLE LOOP OF A DISPLACED SINUDSOIDAL WAVE THE RMS VALUE OF THE WAVE INTEGRATED OVER A COMPLETE CYCLE OR OVER THE SINGLE LOOP

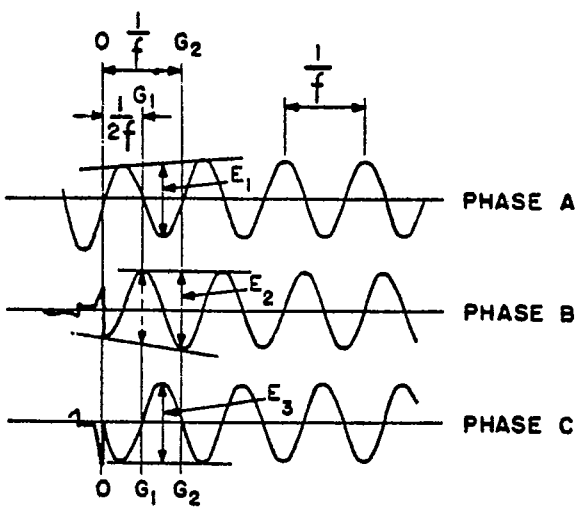

Figure A-6
DETERMINATION OF NORMAL-FREQUENCY RECOVERY VOLTAGE

Phase A = first to open circuit

OO = instant of final arc extinction

G_1G_1 = interval $\frac{1}{2f}$ from OO

G_2G_2 = interval $\frac{1}{f}$ from OO

$\frac{1}{f}$ = 1 period at system frequency

$\frac{E_1}{2.828}$ = normal-frequency recovery voltage, phase A

$\frac{E_2}{2.828}$ = normal-frequency recovery voltage, phase B

$\frac{E_3}{2.828}$ = normal-frequency recovery voltage, phase C

Average normal-frequency recovery voltage

$$= \left(\frac{E_1}{2.828} + \frac{E_2}{2.828} + \frac{E_3}{2.828}\right) \div 3$$

NOTE: In phase B, a voltage peak occurs exactly at interval G_1G_1. In such event, measurement is made at the later interval, G_2G_2.

Copyright National Electrical Manufacturers Association
Provided by IHS under license with NEMA
No reproduction or networking permitted without license from IHS
Not for Resale

Appendix B

RECOMMENDED METHOD OF DETERMINING THE EQUIVALENT STEADY-STATE RMS CURRENT FOR PLOTTING TIME-CURRENT CURVES

The current which melts a fuse in less than 1 second may contain a number of transients in the wave. The magnitude of these transients varies with each fuse operation, and the equivalent steady-state rms value of the current wave can be obtained only by evaluating each case individually. The following methods are recommended for fuse tests which fall in this class:

1. When the fuse melts during transient conditions, the area under the melting part of the current wave is integrated to determine the root-mean-square value of the wave. This value is then multiplied by the scale of the oscillogram to give the rms current.
2. When the fuse melts after transient conditions subside, the transient part of the wave is integrated as described in (1), and the crest-to-crest height of the steady-state wave measured. The two values obtained are combined as follows:

$$\text{RMS value of current wave to melting point} = \sqrt{\frac{\left(\text{rms value of transient part}\right)^2 \left(\text{time of transient part}\right) + \left(\frac{\text{crest-to-crest value of steady-state portion}}{2\sqrt{2}}\right)^2 \left(\text{time of steady state part}\right)}{\text{total time to melt}}}$$

Copyright National Electrical Manufacturers Association
Provided by IHS under license with NEMA
No reproduction or networking permitted without license from IHS

Not for Resale

NEMA SG*2 93 ■ 6470247 0504634 368 ■

Appendix C
FAULT CURRENT CALCULATION

C1 INTERRUPTING DUTY

To select the proper interrupting rating, it is necessary to calculate the maximum symmetrical fault current on the load side of the fuse and compare this value with the interrupting capability of the fuse. Most power fuses, distribution current limiting fuses, and distribution cutouts are now rated by the manufacturer in terms of symmetrical current. A direct comparison can be made between the calculated values of fault current and the fuse rating. Many power fuses and distribution cutouts of earlier manufacture (pre-1970) were rated on the basis of asymmetrical current. For those fuses, multiplying factors should be applied to the calculated fault current before a comparison can be made with the fuse ratings.

The multiplying factors to be applied depend upon the system X/R ratio on the source side of the fuse. Some representative X/R ratios for application of fuses on systems are given in Tables 1, 3, 6, and 9 in Section 41.

For specific applications, where the X/R values are known, multiplying factors can be obtained from Figure C-1. Normally, the curve labeled RMS multiplication factor will be used. Occasionally, the curve labeled peak multiplication factor is of interest during design testing of fuses.

C2 MECHANICAL AND MOMENTARY DUTY

For many purposes, it is necessary to know the maximum possible RMS current (including both AC and DC components) which can flow in a circuit. Allowing for over-excitation of generators, the RMS value of asymmetrical current as calculated for faults initiated at voltage zero, is about 1.8 times the symmetrical fault current. As there will always be some decay even in the first half cycle, however, a multiplier of 1.55 is acceptable.

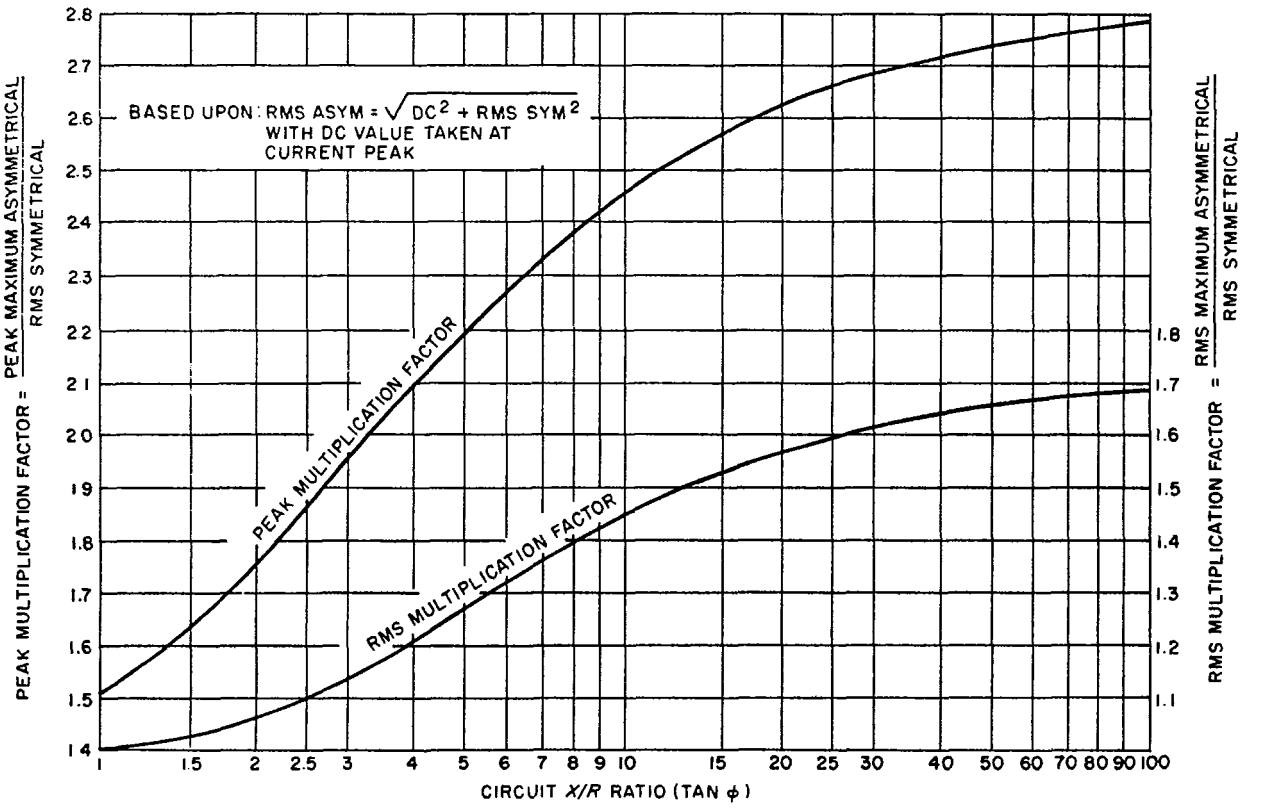

Figure C-1
RELATION OF X/R RATIO TO MULTIPLICATION FACTOR

Copyright National Electrical Manufacturers Association
Provided by IHS under license with NEMA
No reproduction or networking permitted without license from IHS
Not for Resale

Appendix D

TRANSIENT RECOVERY VOLTAGE PARAMETERS

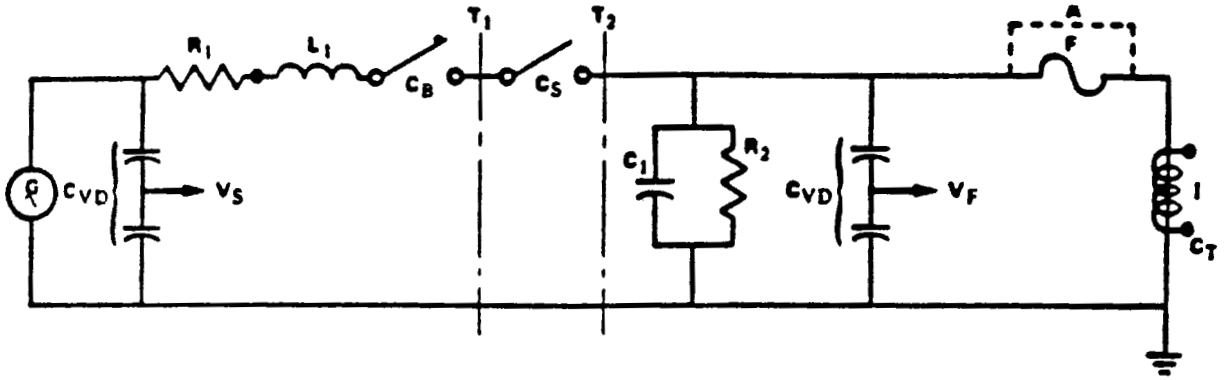

Figure D-1a
TYPICAL CIRCUIT DIAGRAM FOR TEST SERIES 1, 2, 3, 4—Table 1
TEST SERIES 1, 2, 3—Tables 4 & 7
TEST SERIES 1, 2—Table 9

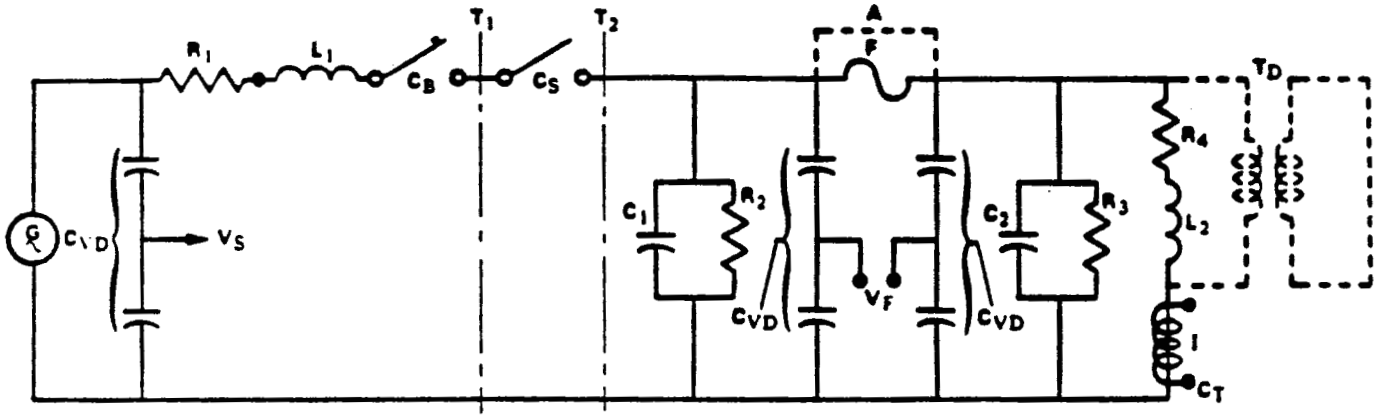

Figure D-1b
TYPICAL CIRCUIT DIAGRAM FOR TEST SERIES 5—Table 1
TEST SERIES 4—Table 4 & 7

A = removable link used for the calibration test
C_B = circuit breaker protecting the source
C_S = closing switch
C_T = current transformer or non-inductive current shunt
C_{VD} = capacitance voltage divider
C_1 = transient recovery voltage frequency control for sourece
C_2 = transient recovery voltage frequency control for load
F = Fuse Under test
G = generator
I = current measurement
L_1 = reactance for source
L_2 = reactance for load (see T_D)
R = resistance to control X/R ratio of source
R_2 = damping resistance to control peak factor of source
R_3 = damping resistance to control peak factor of load
R_4 = resistance to control X/R ratio of load
T_D = distribution transformer with short-circuited secondary terminals (alternative to L_2 and R_4)
T_1,T_2 = possible locations of transformers for tests at voltages higher than generator voltage
V_F = recovery voltage measurement
V_S = reference voltage measurement

NOTE:

Damping circuits other than shown, for controlling the inherent TRV parameters of the test circuit, may be used by mutual agreement between manufacturer and testing laboratory. Such use should be noted and explained in the test report.

Copyright National Electrical Manufacturers Association
Provided by IHS under license with NEMA
No reproduction or networking permitted without license from IHS
Not for Resale

NEMA SG*2 93 ■ 6470247 0504636 130 ■

D1 Measurement of Peak Factor

Peak factor is the ratio of the first peak of the transient recovery voltage to the instantaneous value of source voltage at the time of current zero, and is defined by

$$\text{Peak Factor} = \frac{\text{First-peak of transient recovery voltage}}{\sqrt{2}\ (\text{Source voltage}) \times \sin\ (\tan^{-1} X/R)}$$

This parameter is used in lieu of amplitude factor (the ratio of the first peak of the transient recovery voltage to the peak value of the normal-frequency recovery voltage) and is considered superior—especially when testing in circuits with low X/R ratios.

Peak factor may be measured by current-injecting the test circuit or, alternatively, by conducting an actual fault-interrupting test using a low-arc-voltage interrupting device that does not distort the transient recovery voltage. Either method can also be used to determine the frequency of the test-circuit transient recovery voltage.

The characteristics and use of current-injecting equipment should be such as not to alter the inherent TRV characteristics of the circuit during measurement. For further information on such equipment, the following references may be used:

1. *Royal Swedish Academy of Engineering Sciences*, Proceeding No. 189, 1946, Hammarlund, P.,"Transient Recovery Voltages Subsequent to Short-Circuit Interruption with Special Reference to Swedish Power Systems."
2. *JIEE*, Part II, 1949, Sing-Yui-King,"Determination of Restriking Transients on Power Networks by a Half-Wave Injection Method," p. 700.
3. *AIEE Transactions*, Vol. 74, 1955, Kotheimer, W.C.,"A Method for Studying Circuit Transient Recovery Voltage Characteristics of Electric Power Systems," pp. 1083-6.
4. *Internal Laboratory Report* No. RD/L/R 1782, February 3, 1982, Jackson, R.L., Central Electricity Research Laboratory, Leatherhead, England,"Low Voltage Injection Equipment for Determining the Transient Response of Power Systems Plant."

D1.1 Measurement of Peak Factor by Current Injection

Peak factor is graphically determined from the transient recovery voltage appearing across the open interrupting device when the circuit is current-injected at that point. (See Figure D-2.)

D1.2 Measurement of Peak Factor By Fault Interruption

Peak factor is determined from the transient recovery voltage record of an actual fault-interrupting test on a circuit employing a low-arc-voltage device that does not distort the transient recovery voltage in place of the cutout. (See Figure D-3.)(Peak factor cannot be determined from the transient recovery voltage record of a test employing a fuse cutout as the interrupting device, since cutouts typically distort the transient recovery voltage.)

For this case, the first peak of the transient recovery voltage is measured from the extinction peak as its starting point, as is the measurement of the instantaneous source voltage at the time of current zero.

$$\text{Peak Factor} = \frac{(\text{First-Peak of Transient Recovery Voltage}) + (\text{Extinction Peak})}{\sqrt{2}\ (\text{Source Voltage}) \times \text{Sin}\ (\text{Tan}^{-1} X/R) + (\text{Extinction Peak})}$$

Copyright National Electrical Manufacturers Association
Provided by IHS under license with NEMA
No reproduction or networking permitted without license from IHS
Not for Resale

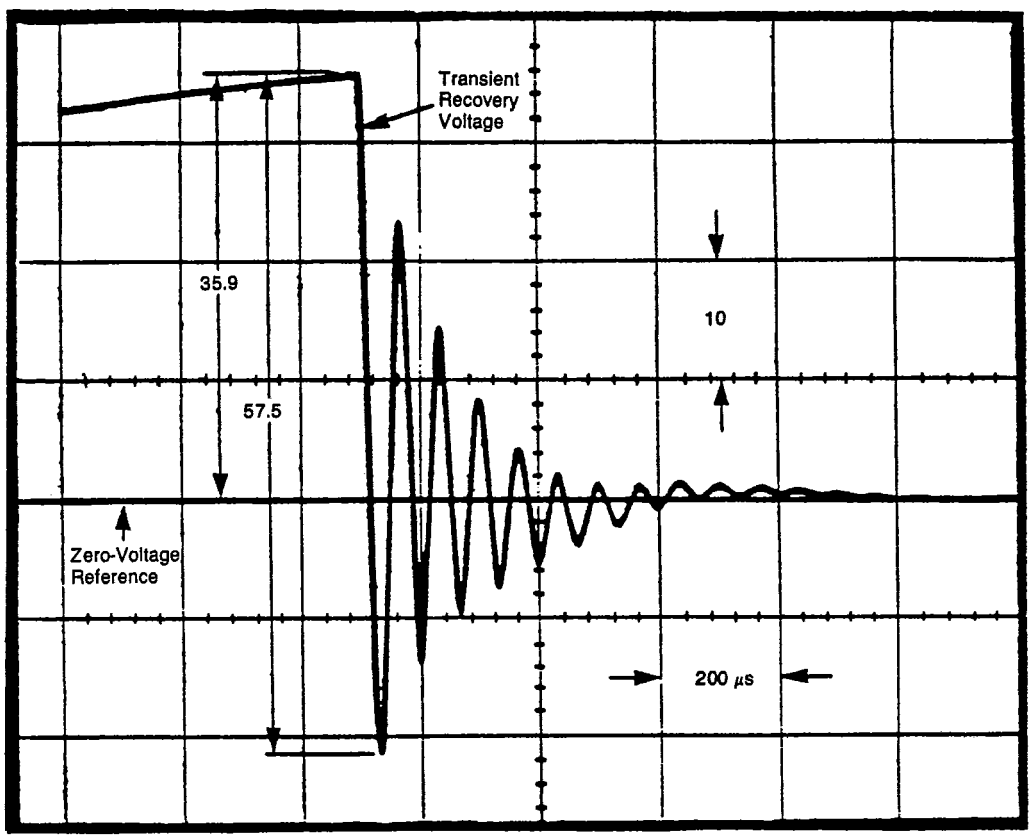

$$\text{Peak Factor} = \frac{57.5}{35.9} = 1.6$$

Figure D-2
PEAK FACTOR DETERMINATION FROM CURRENT-INJECTION TEST RECORD

Copyright National Electrical Manufacturers Association
Provided by IHS under license with NEMA
No reproduction or networking permitted without license from IHS

Not for Resale

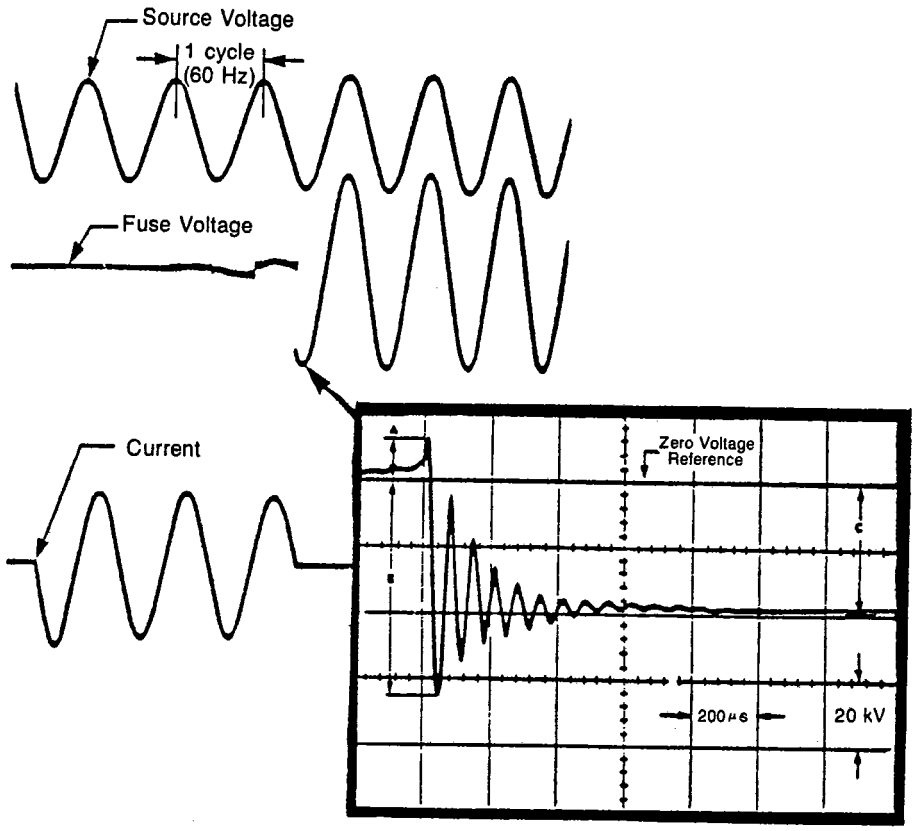

$$\text{Peak Factor} = \frac{B + A}{C \sin(\tan^{-1} X/R) + A}$$

$$= \frac{64.2 + 11.5}{38.2 \sin(\tan^{-1} 2.8) + 11.5} = 1.5$$

Figure D-3
Peak Factor Determination from Fault-Interruption Test Record

Copyright National Electrical Manufacturers Association
Provided by IHS under license with NEMA
No reproduction or networking permitted without license from IHS
Not for Resale

NEMA STANDARDIZATION

The purpose of NEMA Standards, their classification and status are set forth in certain clauses of the NEMA Bylaws, which are quoted below:

Purpose of Standards

National Electrical Manufacturers Association Standards are adopted in the public interest and are designed to eliminate misunderstanding between the manufacturer and the purchaser and to assist the purchaser in selecting and obtaining the proper product for its particular need. Existence of a National Electrical Manufacturers Association Standard does not in any respect preclude any member or nonmember from manufacturing or selling products not conforming to the standard.

(Bylaw—Art. V, Sec.1)

Definition of a Standard

A standard of the National Electrical Manufacturers Association defines a product, process or procedure with reference to one or more of the following: nomenclature, composition, construction, dimensions, tolerances, safety, operating characteristics, performance, rating, testing, and the service for which they are designed.

(Bylaw—Art. V, Sec. 2, Subsection A)

Dimensions

Where dimensions are given for interchangeability purposes, alternate dimensions satisfying the other provisions of the standards publication may be capable of otherwise equivalent performance.

(NEMA Policy Memorandum 84-2, dated June 7, 1984)

Classes of Standards

National Electrical Manufacturers Association Standards are two classes:

1. NEMA Standard, which relates to a product commercially standardized and subject to repetitive manufacture, which standard has been approved by at least 90 percent of the members of the Subdivision eligible to vote thereon;
2. Suggested Standard for Future Design, which may not have been regularly applied to a commercial product, but which suggests a sound engineering approach to future development, which standard has been approved by at least two-thirds of the members of the Subdivision eligible to vote thereon.

(Bylaw—Art. V, Sec. 2, Subsection B)

Authorized Engineering Information

Authorized Engineering Information consists of explanatory data and other engineering information of an informative character not falling within the classification of NEMA Standard or Suggested Standard for Future Design.

(Bylaw—Art. V, Sec. 6, 1st Sentence)

Official Standard Proposal

An Official Standards Proposal is an official draft of a proposed standard which is formally recommended to an outside organization(s) for consideration, comment and/or approval.

(Bylaw—Art. V, Sec. 4, Subsection A)

Identification of Status

Standards in NEMA Standards Publications are identified in the foreword or following each standard as "NEMA Standard" or "Suggested Standard for Future Design." These indicate the status of the standard. These words are followed by a date which indicates when the standard was adopted in its present form by the Association.

The materials identified as "Authorized Engineering Information" and "Official Standards Proposal" is designated similarly.

September 1984

Copyright National Electrical Manufacturers Association
Provided by IHS under license with NEMA
No reproduction or networking permitted without license from IHS
Not for Resale

HIGH VOLTAGE FUSE VOTING CLASSIFICATION OF THE SWITCHGEAR SECTION OF THE NATIONAL ELECTRICAL MANUFACTURERS ASSOCIATION

A B Chance Company
Centralia, MO

Cooper Power Systems
Franksville, WI

General Electric
Hickory, NC

Gould Shawut
Newburyport, MA

G & W Electric Company
Blue Island, IL

Kearney
Atlanta, GA

Westinghouse Electric Corporation
Pittsburgh, PA

Copyright National Electrical Manufacturers Association
Provided by IHS under license with NEMA
No reproduction or networking permitted without license from IHS

Not for Resale