9009279 0002592 182

STANDARDS PUBLICATION/NO. SB 4-1985

nema

Training Manual On Fire Alarm Systems

NEMA

NATIONAL ELECTRICAL MANUFACTURERS ASSOCIATION ■ 2101 L STREET, N.W., WASHINGTON, D.C. 20037

Copyright National Electrical Manufacturers Association
Provided by IHS under license with NEMA
No reproduction or networking permitted without license from IHS
Not for Resale

© 1985 by National Electrical Manufacturers Association

Copyright National Electrical Manufacturers Association
Provided by IHS under license with NEMA
No reproduction or networking permitted without license from IHS
Not for Resale

TABLE OF CONTENTS

		Page
	FOREWORD	i
	SCOPE	ii
Section 1	REFERENCED STANDARDS AND DEFINITIONS	
	Referenced Standards	1
	Definitions	1
Section 2	BASIC FIRE ALARM SIGNALING SYSTEMS	
	General	6
	Control Unit	6
	Noncoded System	6
	Zone Noncoded	6
	Coded System	6
	Master Coded System	6
	March Time Coded System	6
	Selective Coded System	7
	Zoned Coded System	7
	Control Unit Operation	7
	Initiating Device Circuits	8
	Indicating Appliance Circuits	10
	Power Supplies	11
	Supplementary Circuits	12
	Types of Control Systems	12
Section 3	ALARM INITIATING DEVICES	
	Manual and Automatic Devices	15
	Manual Stations	15
	Automatic Alarm Initiating Devices	16
	Switches on Automatic Fire Suppression Systems	20
	Installation Wiring	21
Section 4	ALARM INDICATING APPLIANCES	
	General	25
	Alarm Signal Appliances	25
	Audible Alarm Signal Appliances	25
	Visible Alarm Signal Appliances	26
	Audible/Visible Alarm Signal Appliances	27
	Permanent Recorders	27
	Installation Wiring	28
Section 5	INSTALLATION INSTRUCTIONS FOR FIRE ALARM SYSTEMS	
	General	30
	Location of System Components	30
	Power Supplies	31
	Requirements for Installation of Wiring and Equipment	34
	Manufacturer's Instructions	34
	Local Codes	34
	Types of Circuits	34

Copyright National Electrical Manufacturers Association
Provided by IHS under license with NEMA
No reproduction or networking permitted without license from IHS
Not for Resale

TABLE OF CONTENTS *(Cont.)*

		Page
	Intermixing of Circuits	34
	Enclosed (In Metallic) Vs. Exposed Wiring	35
	Wiring In Plenums	35
	Identification of Circuits	35
	Supervision	35
	Lightning Protection	35
	Outside Wiring	35
Section 6	SYSTEM START-UP PROCEDURE	
	General	36
	Check of Installation Wiring	36
	Normal Operation (Supervisory Condition)	39
	Supervision of Circuits	40
	Alarm Operation	41
Section 7	PROPER MAINTENANCE OF FIRE ALARM SYSTEMS	
	Periodic Maintenance	42
	Control Units	42
	Battery Maintenance	43
	Noncoded Manual Boxes	43
	Coded Manual Boxes	43
	Automatic Transmitters	44
	Automatic Heat Detectors	44
	Smoke Detectors	45
	Sprinkler Waterflow Detectors	45
	Gate-Valve Supervisory Contacts	46
	Open Stem and Yoke (OS&Y) Valve Supervisory Contacts	46
	Pressure Switches	46
	Tank Switches for High and Low Alarm Service on Gravity Tanks	46
	Differential Pressure Switches	46
	Inspector's Test Valves	46
	Alarm Horns	46
	Alarm Bells	47
	Trouble Bells and Buzzers	47
	Fire Drill Switches on Systems	47

Copyright National Electrical Manufacturers Association
Provided by IHS under license with NEMA
No reproduction or networking permitted without license from IHS
Not for Resale

Foreword

The purpose of this Training Manual is to provide text material suitable for training persons in the proper physical installation of Fire Protective Signaling systems. To that end, the Manual covers terminology, basic theory of operation, installation details, system startup techniques, and general maintenance.

While the Manual may serve as a stand alone text, it is best used as a source material for either apprentices or journeymen in a classroom environment using a qualified instructor.

The Manual places emphasis on installation of Fire Protective Signaling Systems instead of how or when to apply the myriad choices of systems or equipment available. Though the Manual focuses on installation, the reader is cautioned to follow the specific installation instructions provided by the manufacturer of systems or equipment being installed.

This publication supercedes the SB 4-1971 (R 1976) NEMA Standards Publication, *Training Manual For Local Fire Protective Signaling Systems.*

The information is a technical guide, as distinct from mandatory requirements for compliance, and is classified by NEMA as Authorized Engineering Information, except for the explanatory terms (definitions) which are classified as NEMA Standards.

As a NEMA Standards Publication, this Manual is required to be updated, and any recommendations for changes should be addressed to:

Manager of Engineering Department
National Electrical Manufacturers Association
2101 L Street, N.W.
Washington, D.C. 20037

Copyright National Electrical Manufacturers Association
Provided by IHS under license with NEMA
No reproduction or networking permitted without license from IHS
Not for Resale

Scope

This Manual, developed by the Signaling, Protection, and Communications Section, provides technical information on basic fire alarm systems in common usage.

Copyright National Electrical Manufacturers Association
Provided by IHS under license with NEMA
No reproduction or networking permitted without license from IHS
Not for Resale

TRAINING MANUAL ON FIRE ALARM SYSTEMS

Section 1

REFERENCED STANDARDS AND DEFINITIONS

1.1 REFERENCED STANDARDS

The following ANSI/NEMA Standards Publication may be obtained from the National Electrical Manufacturers Association, 2101 L Street, NW, Washington, DC 20037, Attn: Sales:

ANSI/NEMA SB 3-1969 (R 1974, 1978, 1983) *Interconnection Circuitry of Noncoded Remote-Station Protection Signaling Systems*

The following NFPA Standards may be obtained from the National Fire Protection Association, Batterymarch Park, Quincy, Massachusetts 02269:

NFPA 13-1983	*Installation of Sprinkler Systems*
NFPA 70-1984	*National Electrical Code*
NFPA 72A-1985	*Standard for Local Protective Signaling Systems*
NFPA 72B-1979	*Standard for Auxiliary Protective Signaling Systems*
NFPA 72C-1982	*Standard for Remote Station Protective Signaling Systems*
NFPA 72D-1979	*Standard for Proprietary Protective Signaling Systems*
NFPA 72E-1984	*Standard for Automatic Fire Detectors*
NFPA 72F-1985	*Standard for Emergency Voice/Alarm Communication Systems*
NFPA 72G-1985	*Guide for Notification Appliances for Protective Signaling Systems*
NFPA 72H-1984	*Guide for Testing Procedures for Protective Signaling Systems*
NFPA 78-1983	*Lightning Protection Code*
NFPA 1221	*Maintenance And Use of Public Fire Service Communications*

1.2 DEFINITIONS

Alarm Indicating Appliance. An appliance that produces an audible or visible alarm signal, or both, in response to a fire emergency.

NEMA Standard 3-8-1985.

Alarm Initiating Device. A device which, when actuated, initiates an alarm. Such devices, depending on their type, can be operated manually or actuated automatically in response to smoke, flame, heat, or waterflow.

NEMA Standard 3-8-1985.

Alarm Signal. A signal indicating an emergency requiring immediate action, such as an alarm for fire from a manual station, a waterflow alarm, or an alarm from an automatic fire alarm system.

NEMA Standard 3-8-1985.

Alarm (Signal) Indicating Appliance. An electromechanical appliance that converts energy into audible or visible form for perception as an alarm signal.

NEMA Standard 3-8-1985.

Alarm System. A combination of compatible initiating devices, control panels, and indicating appliances designed and installed to produce an alarm signal in the event of fire.

NEMA Standard 3-8-1985.

Annunciator. An electrically or mechanically operated visible signaling device having one or more target or lamp indicators to display the status of the fire alarm system.

NEMA Standard 3-8-1985.

Audible Signal. An audible signal is the sound made by one or more audible notification appliances such as bells or horns in response to the operation of an initiating device.

NEMA Standard 3-8-1985.

Automatic Fire Alarm System. A system in which all or some of the circuits are actuated by automatic devices, such as fire detectors.

NEMA Standard 3-8-1985.

Auxiliary Protective Signaling (Fire Alarm) System. A connection to the municipal fire alarm system to transmit an alarm of fire to the municipal communications center. Fire alarms from an auxiliary alarm system are

Copyright National Electrical Manufacturers Association
Provided by IHS under license with NEMA
No reproduction or networking permitted without license from IHS
Not for Resale

received at the municipal communication center on the same equipment and by the same alerting methods as alarms transmitted from municipal fire alarm boxes located on streets.

NEMA Standard 3-8-1985.

Auxiliarized Protective Signaling (Fire Alarm) System. A system utilizing a connection to a municipal fire alarm box to transmit an alarm signal from a protected premise to the municipal communications center.

NEMA Standard 3-8-1985.

Auxiliary Trip Relay. A relay used to operate a municipal master box from an auxiliarized control panel.

NEMA Standard 3-8-1985.

Bell, Single-Stroke. A bell whose gong is struck only once each time operating energy is applied.

NEMA Standard 3-8-1985.

Bell, Vibrating. A bell which rings continuously as long as operating power is applied.

NEMA Standard 3-8-1985.

Box (or Station), Fire Alarm.

a. *Noncoded.* A manually operated device which, when operated, closes or opens one or more sets of contacts and generally locks the contacts in the operated position until the box is reset.

b. *Coded.* A manually operated device in which the act of pulling a lever causes the transmission of not less than three rounds of coded alarm signals.

Similar to the noncoded type, except that instead of a manually operated switch, a mechanism to rotate a code wheel is utilized. Rotation of the code wheel, in turn, causes an electrical circuit to be alternately opened and closed, or closed and opened, thus sounding a coded alarm which identifies the location of the box. The code wheel is cut for the individual code to be transmitted by the device and can operate by clockwork or an electric motor. Clockwork transmitters can be prewound or can be wound by the pulling of the alarm lever. Usually the box is designed to repeat its code four times and automatically come to rest. Prewound transmitters must sound a trouble signal when they require rewinding. Solid state, electronic coding devices are also used in conjunction with the fire alarm control unit to produce coded sounding of the system's audible signaling appliances.

NEMA Standard 3-8-1985.

Breakglass Box (or Station). A breakglass box is one in which it is necessary to break a special element in order to operate the box.

NEMA Standard 3-8-1985.

Central Station Protective Signaling (Fire Alarm) System. A central office, connected to remote alarm and supervisory signaling devices, where personnel are in attendance at all times to monitor the system activity and investigate signals. The central station personnel take immediate and appropriate action upon receipt of an alarm signal.

NEMA Standard 3-8-1985.

Channel. A path or circuit for the electrical transmission of signals (or data) between two or more stations or channel terminations. Channel transmission can be via wires, coax cable, radio waves, or equivalent means of signal transmission.

NEMA Standard 3-8-1985.

Chimes. A single-stroke or vibrating type audible signal appliance which has a xylophone-type striking bar.

NEMA Standard 3-8-1985.

Class A Circuit. Class A refers to an arrangement of supervised initiating device, signaling line, or indicating appliance circuits that prevents a single open or ground on the installation wiring of these circuits from causing loss of the system's intended function.

NEMA Standard 3-8-1985.

Class B Circuit (See also Class A Circuit). Class B refers to an arrangement of initiating device, signaling line, or indicating appliance circuits, which does not prevent a single open or ground on the installation wiring of these circuits from causing loss of the system's intended function.

NEMA Standard 3-8-1985.

Combination Detector. A device that either (a) responds to more than one of the fire phenomena or (b) employs more than one operating principle to sense any one of these phenomena. Typical examples are (a) a combination of a heat detector with a smoke detector, or (b) a combination rate-of-rise and fixed temperature heat detector, or

Copyright National Electrical Manufacturers Association
Provided by IHS under license with NEMA
No reproduction or networking permitted without license from IHS
Not for Resale

(c) a combination photoelectric and ionization smoke detector.

NEMA Standard 3-8-1985.

Combination System. A local protective signaling system for fire alarm, supervisory or watchman service whose components can be used in whole or in part in common with a nonfire-emergency signaling system, such as a paging system, a musical program system, HVAC system, or a process monitoring service system, without degradation of or hazard to the protective signaling system.

NEMA Standard 3-8-1985.

Communication Channel. A signaling channel (usually leased from a communication utility company) having two or more terminal locations and a suitable information handling capacity depending on the characteristics of the system used. One terminal location is at the central supervising station and the other terminal location or locations are sources from which are transmitted alarm signals, supervisory signals, trouble signals, and such other signals as the central supervising station is prepared to receive and interpret.

NEMA Standard 3-8-1985.

Control Unit. A device with the control circuits necessary to (1) furnish power to a fire alarm system; (2) receive signals from alarm initiating devices and transmit them to audible alarm indicating appliances and accessory equipment; and (3) electrically supervise the system installation wiring and primary (main) power.The control unit can be contained in one or more cabinets in adjacent or remote locations.

NEMA Standard 3-8-1985.

Detector-Smoke, Ionization Type. A detector employing the principle of smoke's effect on an electrical current flowing in an ionized air chamber.

NEMA Standard 3-8-1985.

Detector-Smoke, Photoelectric Type. A detector employing the photoelectric principle of operation.

NEMA Standard 3-8-1985.

Door Release, Magnetic. An electromagnetic device used to hold doors open when energized. It is used on automatic closing doors to permit a means of closing such doors in case of fire.

NEMA Standard 3-8-1985.

Emergency Voice/Alarm Communication Systems. A system that provides dedicated manual or automatic, or both, facilities for originating and distributing voice instructions, as well as alert and evacuation signals pertaining to a fire emergency to the occupants of a building.

NEMA Standard 3-8-1985.

End of Line Device. A device used to terminate a supervised circuit.

NEMA Standard 3-8-1985.

Flame Detector. A device which responds to the appearance of radiant energy present in flame.

NEMA Standard 3-8-1985.

General Alarm. A term usually applied to the simultaneous operation of *all* the audible alarm signals on a system to indicate the need for evacuation of a building.

NEMA Standard 3-8-1985.

Ground Fault Detector. Detects the presence of a ground condition on system wiring.

NEMA Standard 3-8-1985.

Horns. An audible signal appliance in which energy produces a sound by imparting motion to a flexible component that vibrates at some nominal frequency.

NEMA Standard 3-8-1985.

Indicating Appliance Circuit. A circuit to which indicating appliances are connected.

NEMA Standard 3-8-1985.

Initiating Device Circuit. A circuit to which automatic or manual signal initiating devices are connected.

NEMA Standard 3-8-1985.

Labeled. Equipment or materials to which has been attached a label, symbol, or other identifying mark of an organization acceptable to the "authority having jurisdiction" and concerned with product evaluation, that maintains periodic inspection of the production of such labeled equipment or materials and by whose labeling the manufacturer indicates compliance with appropriate standards or performance in a specified manner.

NEMA Standard 3-8-1985.

Listed. Equipment or materials included in a list published by an organization acceptable to the "authority having

Copyright National Electrical Manufacturers Association
Provided by IHS under license with NEMA
No reproduction or networking permitted without license from IHS
Not for Resale

jurisdiction'' and concerned with product evaluation, that maintains periodic inspection of production of listed equipment or materials and whose listing states either that the equipment or material meets appropriate standards or has been tested and found suitable for use in a specified manner.

NEMA Standard 3-8-1985.

Local Energy Master Box. A municipal master box that uses electrical energy from the protected premises to energize its electromagnetic tripping mechanism. See definition for shunt master box.

NEMA Standard 3-8-1985.

Local Protective Signaling (Fire Alarm) System. A local system sounds an alarm at the protected premises as the result of the manual operation of a fire alarm box or the operation of protection equipment or systems such as water flowing in a sprinkler system, the discharge of CO_2 or Halon, or the detection of smoke or heat.

NEMA Standard 3-8-1985.

Master Box. A fire alarm box that can be operated by remote means to transmit a coded signal to a municipal fire alarm system.

NEMA Standard 3-8-1985.

Multiplexing. A signaling method using wire path, cable carrier, radio, or a combination of these techniques, and characterized by the simultaneous or sequential, or both, transmission and reception of multiple signals in a communication channel including means for positively identifying each such signal.

NEMA Standard 3-8-1985.

Positive Non-Interfering (PNI) System. A system in which the alarm initiating devices are electrically arranged so that, when one device is operated to transmit an alarm, no other device operated over the same electrical circuit can interfere with the transmission of a complete and unmutilated alarm.

NEMA Standard 3-8-1985.

Positive Non-Interfering and Successive (PNIS) Systems. A system which prevents subsequently operated stations from interfering with the transmission from a station that is in operation, and also permits any station to transmit, in turn, its assigned number of rounds of coded signal once the previously actuated station has completed its code.

NEMA Standard 3-8-1985.

Presignal System. A system in which the operation of an automatic detector or the first operation of a manual fire alarm station initially actuates only a selected group of alarm indicating appliances for the purpose of notifying key personnel and the fire department when this feature is provided.

NEMA Standard 3-8-1985.

Proprietary Protective Signaling (Fire Alarm) System. A system supervised by competent and experienced observers and operators in a central supervising station at the property protected. In addition, a proprietary system requires a secondary (standby) source of power and at least one recording device to make a permanent record of signals received.

NEMA Standard 3-8-1985.

Remote Station Protective Signaling (Fire Alarm) System. A system employing a supervised direct circuit connection between alarm initiating devices or a control unit in a protected premises and signal receiving equipment in a remote station, such as fire or police headquarters or other places acceptable to the authority having jurisdiction.

NEMA Standard 3-8-1985.

Retard, Adjustable. An adjustable time delay mechanism in a waterflow switch between the paddle-operated stem and the alarm initiating contacts to keep brief water movement (water hammer, surges, and pressure variations) from initiating an alarm signal.

NEMA Standard 3-8-1985.

Signaling Line Curcuit. A circuit over which multiple signals are transmitted and received.

NEMA Standard 3-8-1985.

Shunt Master Box. A municipal master box that uses electrical energy from the municipal fire alarm system to energize its electromagnetic tripping mechanism. See definition for Local Energy Master Box.

NEMA Standard 3-8-1985.

Shunt Non-Interfering (SNI) Coded System. A coded system in which a fire alarm station, once actuated, will transmit not less than three rounds of coded alarm signals

Copyright National Electrical Manufacturers Association
Provided by IHS under license with NEMA
No reproduction or networking permitted without license from IHS
Not for Resale

without interference from any station electrically more distant from the control unit.

NEMA Standard 3-8-1985.

Shunt Non-Interfering Successive (SNIS) Coded System. A shunt non-interfering system in which a fire alarm station when interrupted by a station electrically closer to the control panel, will complete the sending of the interrupted portion of its code when the station with higher priority has completed its transmission.

NEMA Standard 3-8-1985.

Trouble Signal. An audible signal indicating trouble of any nature, such as a circuit break or ground, occurring in the device or wiring associated with a fire alarm system.

NEMA Standard 3-8-1985.

Trunk Facility. That part of a signaling line circuit connecting two or more leg facilities to a central supervising or satellite station.

NEMA Standard 3-8-1985.

Two-Way Fire Department Communication System. An electrically supervised telephone system providing private voice communication capability between the command center or central control panel and designated remote locations. Phone or phone jacks can be installed at the remote locations.

NEMA Standard 3-8-1985.

Visible Signal. A visible signal is the response to the operation of an initiating device by one or more direct or indirect visible notification appliances. For a direct visible signal, the sole means of notification is by direct viewing of the light source. For an indirect visible signal, the sole means of notification is by reflected light within the room.

NEMA Standard 3-8-1985.

Voice Paging Protective Signaling Service. A manual or automatic supervised paging system used to transmit voice messages (information, instructions, directions) on a selective and all-call basis.

NEMA Standard 3-8-1985.

Waterflow Switch. An assembly approved for the service and so constructed and installed that any flow of water from a sprinkler system equal to or greater than that from a single automatic sprinkler head will result in activation of this switch and subsequently indicate an alarm condition.

NEMA Standard 3-8-1985.

Zone. A designated area of a building. Commonly, zones within a building are annunciated to rapidly locate a fire.

NEMA Standard 3-8-1985.

Copyright National Electrical Manufacturers Association
Provided by IHS under license with NEMA
No reproduction or networking permitted without license from IHS
Not for Resale

Section 2

BASIC FIRE PROTECTIVE SIGNALING SYSTEMS

2.1 GENERAL

All fire alarm systems consist of the following basic parts:

I. Control Unit
II. Initiating Device Circuits
III. Indicating Appliance Circuits
IV. Power Supply
V. Supplementary Circuits (Optional)

The applications of fire alarm systems can be broken down into four broad categories:

- Local Protective Signaling Systems
- Auxiliary Protective Signaling Systems
- Remote Station Protective Signaling Systems
- Proprietary Protective Signaling Systems

Each of these categories is defined in Section 1 of this manual. The specific application of these system types, while sharing common installation requirements, should be selected to meet the requirements of one or more authorities having jurisdiction. In addition, care should be taken to install equipment in accordance with manufacturer's instructions.

Authorized Engineering Information 3-8-1985.

2.2 CONTROL UNIT

The control unit is the brain of the system. It provides power to the system and electrically supervises its circuits. The control unit contains the logic circuits to receive signals from alarm initiating devices and transmit them to alarm indicating appliances and supplementary equipment. Depending on system design, the fire alarm signaling function may provide for one or more of the following:

- Notify all building occupants simultaneously
- Notify occupants in certain portions of the building who are in immediate danger
- Notify key building personnel
- Notify the fire department
- Perform supplementary functions, as required

The fire alarm signaling function falls into two broad categories: Coded and Noncoded. Within those two categories, there are a variety of system operations which are described in 2.3 through 2.9.

Authorized Engineering Information 3-8-1985.

2.3 NONCODED SYSTEM

A noncoded system is one in which a continuous fire alarm signal is transmitted for a predetermined period of time after which the alarm indicating appliances may be manually or automatically restored to normal. (NOTE: Restoring the system to normal following a fire alarm may involve the resetting of detection devices and the control unit, and is implied in all of the following descriptions.)

Authorized Engineering Information 3-8-1985.

2.4 ZONED NONCODED

A zoned noncoded system provides for the continuous transmission of the fire alarm signal as in a noncoded system, but also incorporates an annunciator to indicate the exact area, or zone, of the building from which the alarm originated.

Before continuing with the description of a variety of coded system types, it should be recognized that coded systems use a coding device, which may be electromechanical or electronic in nature, to produce a predetermined, patterned, and distinctive fire alarm signal. The coding mechanism may be integral to the control unit, or it may be employed in a coded manual station, or it may be used in a coded transmitter device to which are connected noncoded manual and automatic fire detection devices.

Authorized Engineering Information 3-8-1985.

2.5 CODED SYSTEM

A coded system is one in which not less than three rounds of coded fire alarm signals are transmitted after which the fire alarm system may be manually or automatically restored to normal.

Authorized Engineering Information 3-8-1985.

2.6 MASTER CODED SYSTEM

A master coded system is one in which the coding mechanism provides for the transmission of the same common-coded fire alarm signal in response to the initiation of an alarm from any location in the building.The common code (e.g., 4-4) should be selected to produce a distinctive pulsing of the system's alarm indicating appliances so that building occupants know unmistakenly that a fire condition exists.

Authorized Engineering Information 3-8-1985.

2.7 MARCH TIME CODED SYSTEM

A march time coded system is actually a noncoded

Copyright National Electrical Manufacturers Association
Provided by IHS under license with NEMA
No reproduction or networking permitted without license from IHS
Not for Resale

system that operates much like the master coded system except that the coding mechanism is arranged to produce a fire alarm signal at a march time rate of approximately 120 pulses per minute.

Authorized Engineering Information 3-8-1985.

2.8 SELECTIVE CODED SYSTEM

A selective coded system is one in which a number of code transmitters or remotely mounted devices, or both, are used; the coding mechanism for each coded unit is systematically selected and organized to produce its own distinctive coded alarm signal identifying its location (floor or zone) in the system. In this way, the sounding of a fire alarm signal notifies the building occupants of an alarm of fire, and, at the same time, tells key building personnel, such as an in-house fire brigade, of the location from which the alarm was initiated. Normally, four rounds of the selective code are sounded.

Authorized Engineering Information 3-8-1985.

2.9 ZONED CODED SYSTEM

A zoned coded system also alerts both the building occupants and key building personnel. While the audible alarms in a zoned coded system function identically to those in a selective coded system, zoned coded systems generally are less specific about the origin of the signal. As its name implies, the signal denotes only the general area or zone from which one or more different detection devices may have initiated the alarm.

Authorized Engineering Information 3-8-1985.

2.10 CONTROL UNIT OPERATION

A fire alarm control unit may be a simple, single-zone panel providing for one alarm initiating circuit and one or two alarm indicating circuits. However, most control units are modular in construction and are designed to accommodate multiple zones of detection and alarm signaling, as well as the selection of other modular components to perform any of the system functions listed in 2.1.

Fire alarm systems must perform in an emergency. For this reason, the control panel constantly monitors (supervises) the integrity of the primary (main) power supply and the installation wires and the connections of the alarm initiating devices and alarm indicating appliances to the initiating and indicating circuits. The control unit will sound a trouble signal to alert operating personnel when a fault condition on any of the supervised circuits which prevents normal circuit operation exists.

The trouble signal normally will sound to indicate any of the following types of faults:

- Loss of primary (main) power
- An open in a supervised wire
- A ground on a supervised wire if a ground can cause the system to be inoperative or ground detection is supplied.
- Loss of an audio amplifier, tone generator, or pre-amplifier
- A short across an alarm indicating circuit
- Loss of connection between any installation wire and any alarm initiating device wire or terminal necessary to sense an alarm
- Loss of connection between any installation wire and any alarm indicating appliance wire or terminal necessary to indicate the presence of an alarm

Any one of the above faults could interfere with the proper transmission or receipt of an automatic or manual alarm signal.

The trouble signal is an audible appliance, with a distinctive sound. A visible indication (pilot light/LED) may be provided also. Depending upon control panel design, a trouble signal silencing switch may be provided. If the trouble can be silenced in this manner, a trouble light must be provided, which remains lighted until the cause of the trouble is corrected. The audible trouble signal will sound if the switch is in the "silence" position and no trouble exists.In addition to the above trouble indications, the control panel may contain additional trouble lamps which pinpoint the particular circuits or zones which are in trouble. Trouble conditions also may be annunciated on a system printer, if used.

It should be noted here that the requirement for a fire alarm system to monitor (supervise) the integrity of its interconnecting wiring and connections is the major point of distinction between the installation of a fire alarm system and the installation of the more general wiring in a building. Most problems encountered during the start-up of a fire alarm system are traced to errors made in the installation wiring or connections, or both. It is, therefore, extremely important to follow the manufacturer's instructions when installing a fire alarm system.

More detailed information on circuits and functions that must be supervised can be found in the *National Electrical Code*, NFPA Standard 70 Article 760, and the NFPA Standard Series 72A through D and 72F for the type of system being installed.

The control panel is usually installed in a wall-mounted cabinet which may be either surface or flush mounted, a floor-mounted cabinet, or a desk-type console, depending upon the size of the system and the manufacturer. Normally, a lock is provided for security of the controls.

Authorized Engineering Information 3-8-1985.

Copyright National Electrical Manufacturers Association
Provided by IHS under license with NEMA
No reproduction or networking permitted without license from IHS
Not for Resale

2.11 INITIATING DEVICE CIRCUITS

Initiating device circuits are those to which automatic or manual initiating devices are connected. The commonly used types of circuits are:

2.11.1 Two-Wire using normally open contact initiating devices and an end-of-line device. This is termed a Class B circuit. See Figure 2-1. Supervision of this circuit is accomplished by passing a low current through the installation wires and end-of-line device. Any interruption of this current will cause the trouble signal to sound.

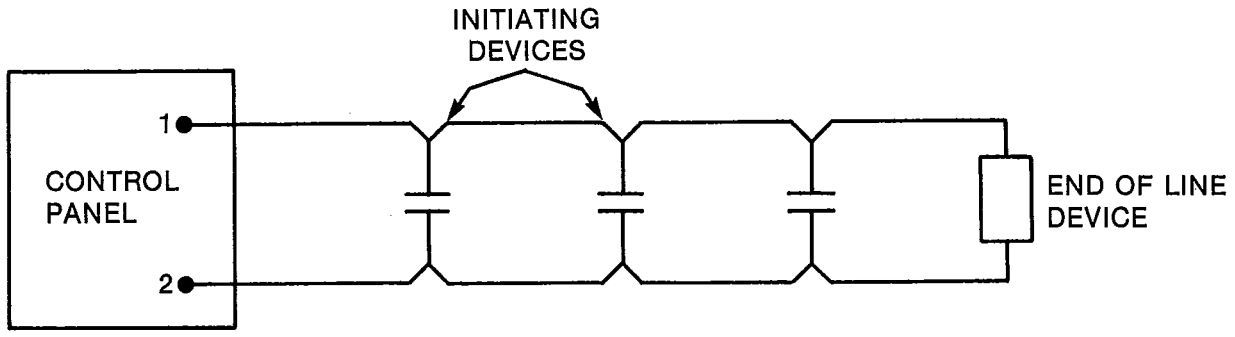

Figure 2-1
CLASS B INITIATING CIRCUIT USING NORMALLY OPEN INITIATING CONTACTS

2.11.2 Two-Wire using normally closed contact initiating devices, which use bias resistors across the contacts, and an end-of-line device in order to differentiate between alarm and trouble conditions. See Figure 2-2. This is also a Class B circuit.

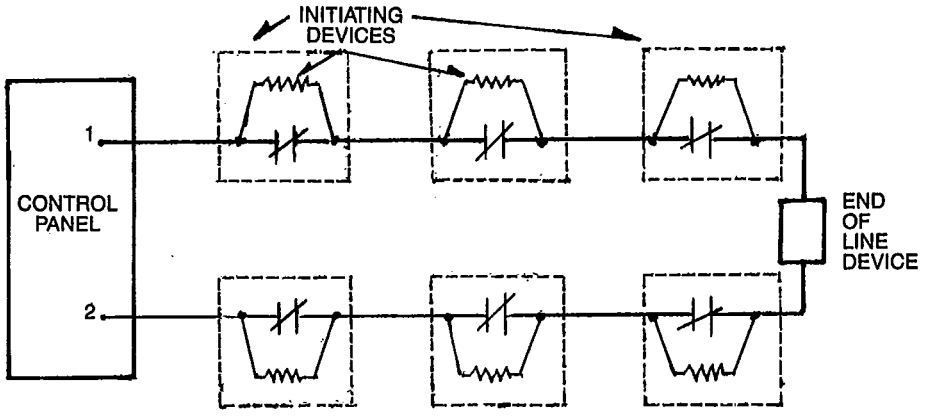

Figure 2-2
CLASS B INITIATING CIRCUIT USING NORMALLY CLOSED INITIATING CONTACTS

Copyright National Electrical Manufacturers Association
Provided by IHS under license with NEMA
No reproduction or networking permitted without license from IHS
Not for Resale

2.11.3 Two-Wire in which both polarized normally open contact initiating devices and oppositely polarized alarm indicating appliances are connected on the same circuit and terminate in an end-of-line device. See Figure 2-3. This is also a Class B circuit.

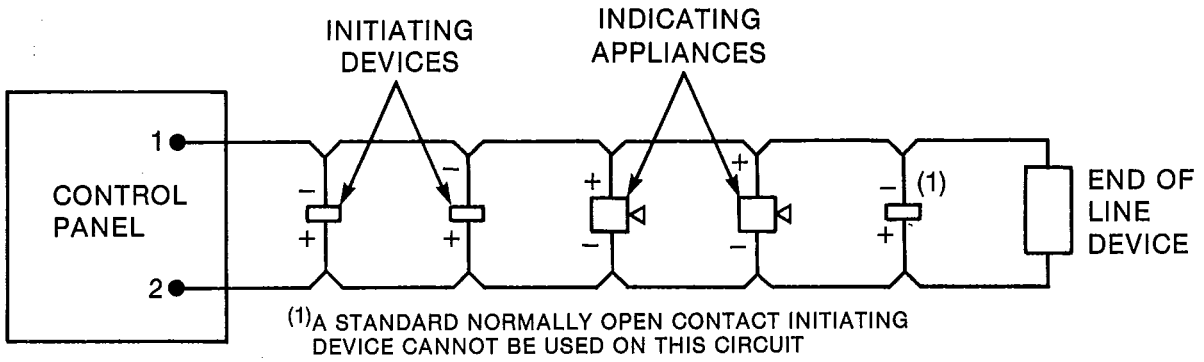

Figure 2-3
CLASS B CIRCUIT WITH BOTH POLARIZED INITIATING DEVICES AND INDICATING APPLIANCES ON SAME CIRCUIT

2.11.4 Four-Wire using normally open contact initiating device. The initiating devices are connected across two of the wires. After the last device these two wires are brought back directly to the control panel. If the wires terminate within the control panel with only an end-of-line device, the circuit is termed a Class B. Additional circuitry may be provided which allows the operation of the circuit despite the occurrence of a single open or ground in that circuit. With this additional circuitry, the circuit is termed a Class A circuit. See Figure 2-4. It may be necessary to refer to the manufacturer's operating manual or drawings to determine whether a circuit is a *four wire* "Class B" or a true "Class A" circuit.

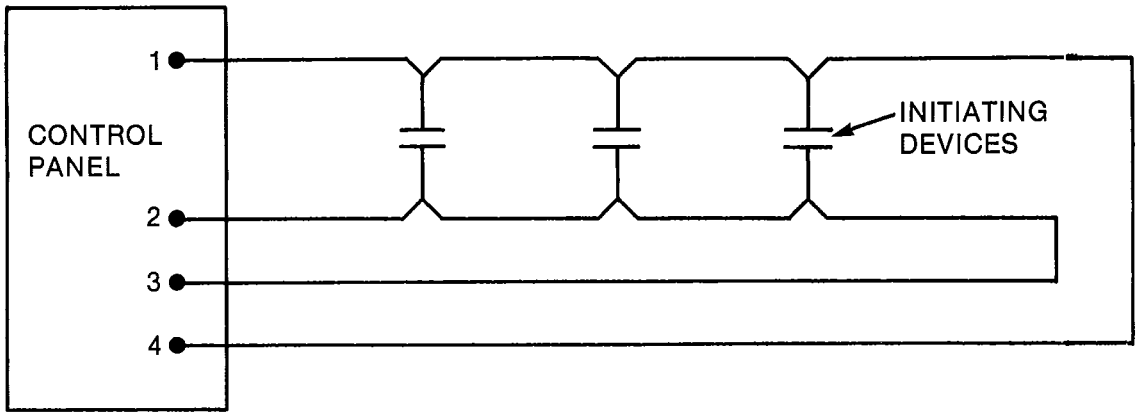

Figure 2-4
CLASS A OR B 4-WIRE INITIATING CIRCUIT USING NORMALLY OPEN CONTACTS

Copyright National Electrical Manufacturers Association
Provided by IHS under license with NEMA
No reproduction or networking permitted without license from IHS
Not for Resale

2.11.5 Four-Wire in which polarized normally open contact initiating devices and oppositely polarized alarm indicating appliances are connected on the same circuit. See Figure 2-5.

Authorized Engineering Information 3-8-1985.

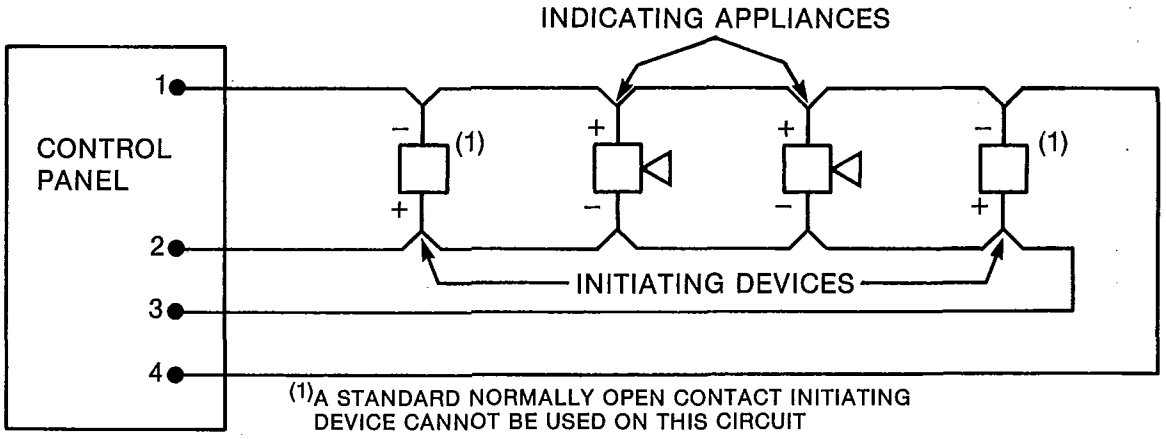

Figure 2-5
CLASS A OR B 4-WIRE CIRCUIT WITH BOTH POLARIZED INITIATING DEVICES AND INDICATING APPLIANCES ON SAME CIRCUIT

2.12 INDICATING APPLIANCE CIRCUITS

Indicating appliance circuits are those which can operate a variety of appliances such as bells, horns, chimes, buzzers, or speakers to signal an alarm condition. Visible appliances such as strobe or other lamp-types also may be used on these circuits. Appliances used in fire alarm systems should be listed for such use. Common indicating circuit types can be as follows:

2.12.1 Series Circuits in which the current flows through a continuous wire loop from the control panel through the coil of each connected signal appliance in turn and then finally back to the control panel. Supervision of this circuit is accomplished by passing a low current through the lines. Any interruption of this current will cause the trouble signal to sound. Because NFPA Standards since 1979 require a trouble signal to sound in the event of a short on an alarm indicating circuit that would short out one or more signal appliances, the series alarm indicating circuit no longer meets code requirements. See Figure 2-6.

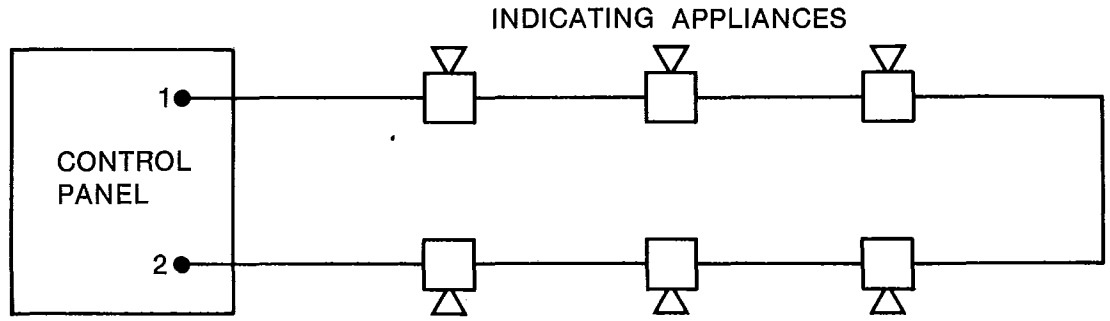

Figure 2-6
SERIES ALARM INDICATING CIRCUIT

Copyright National Electrical Manufacturers Association
Provided by IHS under license with NEMA
No reproduction or networking permitted without license from IHS
Not for Resale

2.12.2 Parallel Circuits normally have polarized alarm indicating appliances wired in parallel and equipped with diodes in series with each coil and an end-of-line device. Supervising current is allowed to flow in one direction through the end-of-line device to monitor the circuit wires. Upon reversal of the current flow, the signaling appliances are now allowed to sound while the end-of-line device limits the current flow. Starting in 1979, NFPA 72A required that line shorts be monitored also. Upon interruption of the supervisory current, or a wire to wire short, an audible trouble signal is sounded. See Figure 2-7.

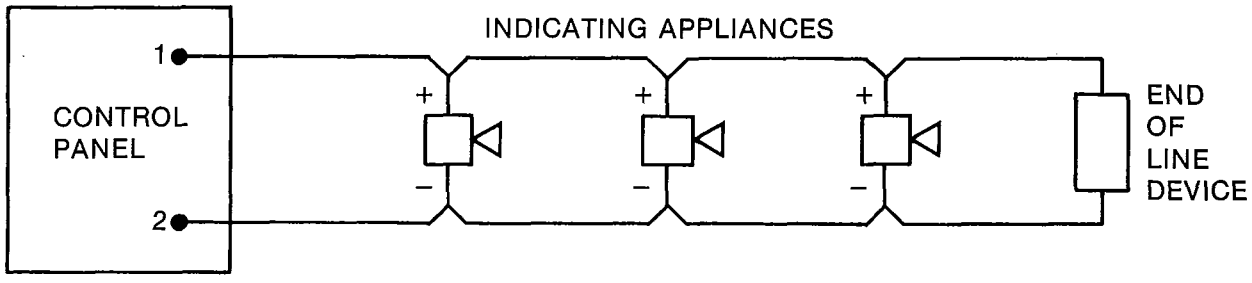

Figure 2-7
PARALLEL ALARM INDICATING CIRCUIT USING POLARIZED ALARM INDICATING APPLIANCES

2.12.3 Parallel Circuits used also for speaker circuits when the fire alarm control panel is designed to sound electronic tones or to give recorded or live voice messages. The most common method of supervision used in this application is to have a capacitor in series with each speaker transformer coil so as to block any dc voltage used for supervision. The audible signal, being ac, will pass through the capacitor and energize the speaker coil. See Figure 2-8.

Authorized Engineering Information 3-8-1985.

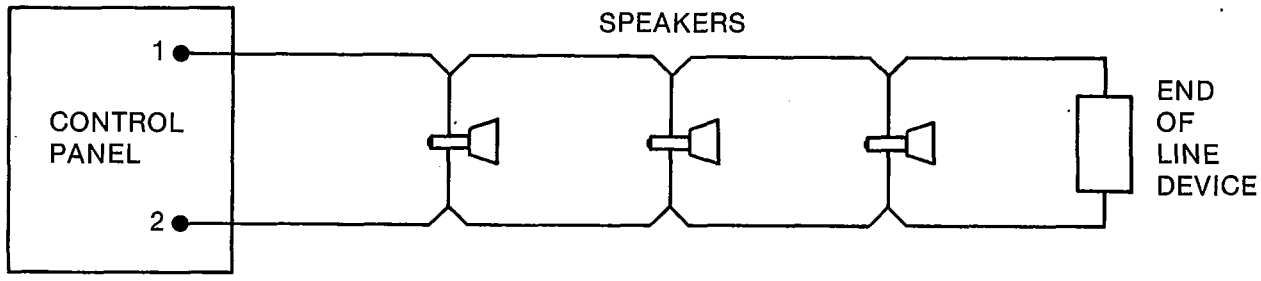

Figure 2-8
PARALLEL ALARM INDICATING CIRCUIT USING SPEAKERS

2.13 POWER SUPPLIES

Fire alarm systems are required to have three sources of electrical power, a primary (main) power supply to operate the system, a secondary (standby) power supply to operate the system in the event of failure of the primary (main) power supply, and a trouble power supply to operate trouble signals.

Copyright National Electrical Manufacturers Association
Provided by IHS under license with NEMA
No reproduction or networking permitted without license from IHS
Not for Resale

Many local fire alarm systems have been installed without a secondary (standby) power supply. NFPA 72A was revised in 1985 to require that the secondary (standby) power supply be mandatory instead of optional except when the building power supply is backed up by an approved Emergency System, Legally Required Standby System, or Optional Standby System arranged in accordance with Articles 700, 701, and 702 of the *National Electrical Code*, NFPA 70.

The trouble signal power supply must be able to sound trouble signals in the event of loss of the primary (main) power. The NFPA 72 Series does not permit a primary battery (dry cells) to be used for this purpose.

The secondary (standby) power supply may be used for the trouble signal power supply.

Power supplies are more fully described in Section 5.

Authorized Engineering Information 3-8-1985.

2.14 SUPPLEMENTARY CIRCUITS

Supplementary circuits may consist of the following:

- Annunciators
- Signal sounding appliances not required by NFPA 72A-D
- Printers
- Fan shutdown
- Motor stop
- Elevator capture

These circuits may be unsupervised, provided they are designated as supplementary by the authority having jurisdiction,and a short circuit, a break,or a ground fault does not prevent the required operation of the fire alarm system.

Authorized Engineering Information 3-8-1985.

2.15 TYPES OF CONTROL SYSTEMS

2.15.1 Local Protective Signaling System (NFPA 72A)

A local system provides alarm signal indications at the protected premises and, in addition, it provides for one or more of the following:

- Manual fire alarm service
- Automatic fire alarm service
- Automatic detection of waterflow or abnormal conditions in sprinkler systems
- Automatic discharge or abnormal conditions in extinguishing systems such as CO_2 or Halon
- Guards tour supervisory service
- Industrial process monitoring

2.15.2 Auxiliary Protective Signaling System (NFPA 72B)

There are two types of auxiliary systems in common use:

One is a local energy auxiliary alarm system which uses power from the local system to automatically trip a transmitter or master box connected to the municipal public fire service communications systems (See NFPA 1221). See Figure 2-9.

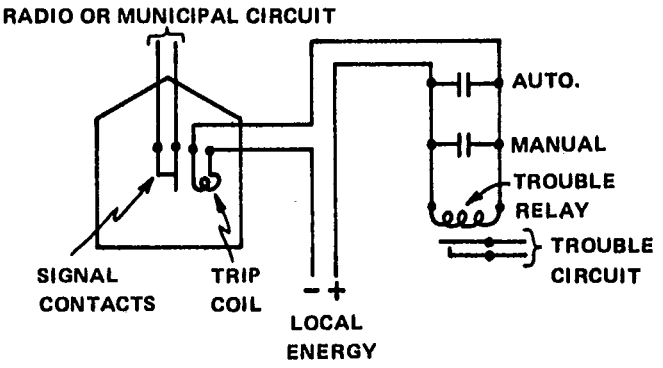

Figure 2-9
LOCAL ENERGY TYPE AUXILIARY ALARM SYSTEM

The other is a shunt auxiliary alarm system with isolated closed contacts controlled by the local fire alarm system or alarm initiating devices connected directly to a municipal transmitter or master box. Power from the municipal system loop is used to trip the transmitter. See Figure 2-10.

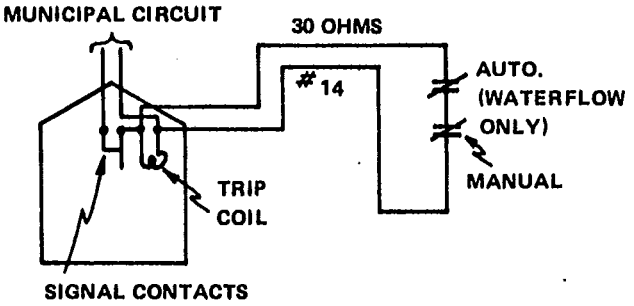

Figure 2-10
SHUNT TYPE AUXILIARY ALARM SYSTEM

Copyright National Electrical Manufacturers Association
Provided by IHS under license with NEMA
No reproduction or networking permitted without license from IHS
Not for Resale

2.15.3 Remote Station Protective Signaling System (NFPA 72C)

The remote station system provides an alternative method of connecting a fire alarm system directly to the municipal communications center over lines other than the municipal fire alarm circuits. Usually this means a separate pair of telephone wires, leased from the telephone company, between each property and the municipal communications center. Here again, permission must be obtained from the authority having jurisdiction. Generally, systems of the type described are noncoded systems, and the actuation of an individual pilot light identifies the property where the alarm originated. See Figures 2-11A and 2-11B.

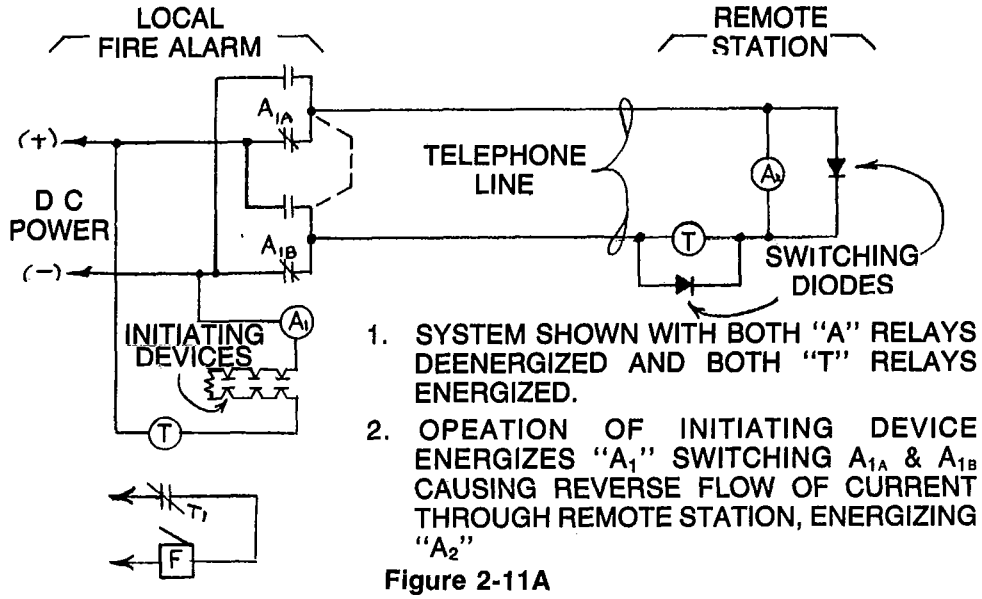

Figure 2-11A
REMOTE STATION PROTECTIVE SIGNALING SYSTEM SCHEMATIC DIAGRAM

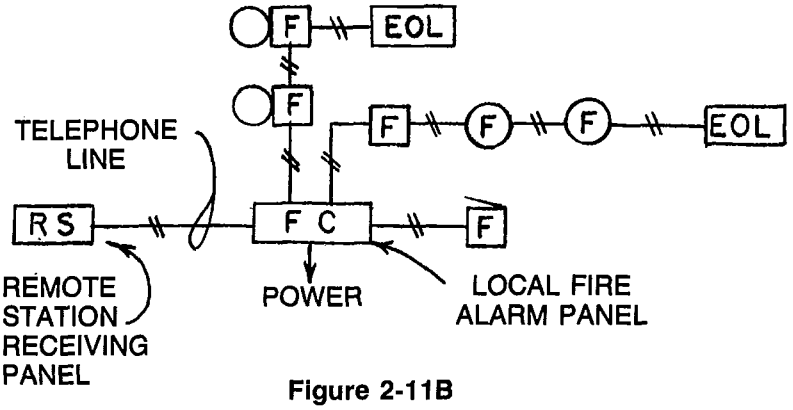

Figure 2-11B
REMOTE STATION PROTECTIVE SIGNALING SYSTEM RISER DIAGRAM

There are two types of noncoded remote station systems. The first is the "reverse-polarity" type in which power for the leased circuit originates at the fire alarm control on the protected property. In the event of an alarm, the polarity of the leased line is reversed (for example, through a relay) so that a relay is energized in a receiver at the municipal communications center, thereby lighting a light identifying the location from which the alarm originated and actuating an alarm sounding appliance. Lines are electrically supervised.

NEMA Standards Publication No. SB 3-1969 (R 1974, 1978, 1983) *Interconnection Circuitry of Noncoded Remote-Station Protective Signaling Systems*, specifies a design standard for reverse polarity noncoded remote station systems that will assure proper operation between transmitting and receiving equipment regardless of source of manufacture.

The second type utilizes differential current relays or equivalent circuits. A small supervisory current flows through the leased wire and an "end-of-line" resistor at the protected property. When an alarm is actuated, a relay contact shorts out the end-of-line resistor, causing the current to increase sufficiently to pick up or energize an alarm relay at the municipal communications center. This, in turn, lights a pilot light and sounds the alarm appliance. This system can be powered from either end of the line.

For either system, the receiving unit at the municipal

Copyright National Electrical Manufacturers Association
Provided by IHS under license with NEMA
No reproduction or networking permitted without license from IHS
Not for Resale

communications center can be a single-station or a multiple-station receiver with separate alarm indicators and individual pairs of wires for each protected property. Because of the small gauge of the leased circuit wire, loop resistance is an important factor and must be determined prior to specifying the equipment. Long lines having up to 4000 ohms loop resistance, for example, may require different equipment or power supplies, or both, from a circuit of only 500 ohms loop resistance.

2.15.4 Proprietary Protective Signaling System (NFPA 72D)

A proprietary system serves from a central supervising station either single or multiple contiguous or non-contiguous properties under one ownership. Trained operators are required to be in constant attendance on this type of system. The operator may alert an in-house fire brigade or the municipal fire department or both, as required by the authority having jurisdiction. All signals received by the central supervising station that show a change of status must be automatically and permanently recorded, including time and date of occurrence.

2.15.5 Emergency Voice/Alarm Communication Systems

Emergency Voice/Alarm Communication Systems are used to permit voice communications during fire and other emergencies.

A one way system permits emergency personnel to give voice instructions on either a selective or on an all call basis via microphone and a system of loudspeakers. Its use came about with the advent of high-rise buildings and other structures where immediate evacuation of the entire building might be impractical and the fire plan called for selective partial evacuation or the relocation of the building occupants from the fire affected zones.

A two way system, using telephone or intercom techniques, permits communication between fire service personnel while investigating or fighting a fire in the building. Most two way systems use telephones located in fire stairwells so that the fire service personnel can be assured of reliable communication from any floor to the fire command station. These telephones are also permitted to be used by other building occupants and are frequently installed on all floors for use in emergency circumstances. A notification signal, distinctive from any other alarm or trouble signal is required at the fire command station to indicate an off-hook condition of any telephone on the system.

Emergency Voice/Alarm Communication Systems take two basic forms:

a. A system which stands alone and is manually controlled. Voice or tone signals can be selected and distributed by operator choice.
b. A system which is integrated into a full fire alarm system. Voice or tone signals can be selected and distributed manually or automatically.

Authorized Engineering Information 3-8-1985.

Copyright National Electrical Manufacturers Association
Provided by IHS under license with NEMA
No reproduction or networking permitted without license from IHS
Not for Resale

Section 3

ALARM INITIATING DEVICES

3.1 MANUAL AND AUTOMATIC DEVICES

Alarm initiating devices for fire alarm systems are either manual stations (boxes) or automatic detectors and are used to initiate an alarm on a fire alarm system.

Authorized Engineering Information 3-8-1985.

3.2 MANUAL STATIONS

Manual stations may be of the following types: (1) noncoded or coded, (2) presignal or general alarm, (3) breakglass or nonbreakglass, and (4) single action or double action.

3.2.1 Noncoded Stations

A noncoded manual station contains a normally open or closed switch that is housed within a distinctive enclosure. The device may be surface, semiflush, or flush mounted. Once actuated, the station contacts transfer and are maintained until some specific resetting of the station restores the unit to normal. Contact and circuit arrangements may vary to provide a number of functions simultaneously.

3.2.2 Coded Stations

Coded stations contain a mechanically or electrically driven motor which when activated, turns a code wheel causing contacts to momentarily open or close to reproduce the code of the station. The station is required to repeat its code a minimum of three times. The device may be surface, semiflush, or flush mounted. Contact and circuit arrangements may vary to provide a number of functions simultaneously. Electronic devices may be used to produce the same effect.

3.2.3 Presignal Stations

Presignal stations initially cause alarm signals to sound only in specific areas. Actuation of a key switch on the station or the control panel will cause an evacuation signal to sound.

3.2.4 General Alarm Stations

A general alarm station (the most common), when actuated, causes evacuation signals to sound immediately.

3.2.5 Breakglass Stations

The term "breakglass" is applied to both noncoded and coded stations when the actuation of the device to cause an alarm requires the initial action of breaking a glass or other breakable element. Stations without this feature are classified as "non-breakglass." See Figure 3-1.

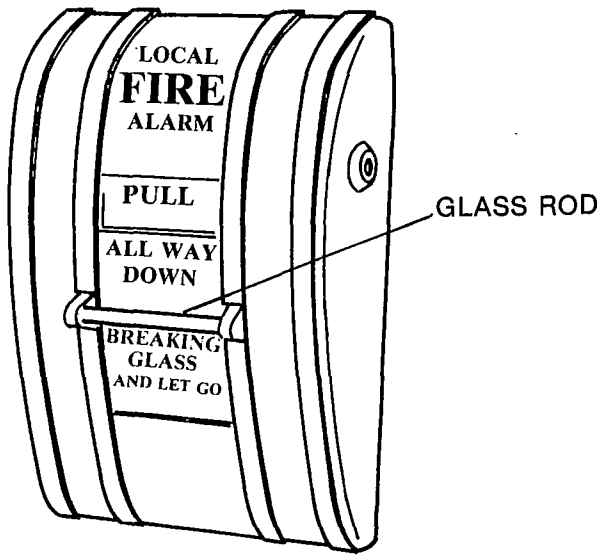

Figure 3-1
BREAKGLASS STATION

3.2.6 Single Action Stations

A station that initiates an alarm as the result of a single action by the user. The required action usually is breaking a glass element only or actuating a lever or other movable part of the station. See Figure 3-2.

3.2.7 Double Action Stations

A station that initiates an alarm as a result of two actions taken by the user. The operation of such a station normally requires the user to break a glass, open a door, or lift a cover in order to gain access to a switch or lever which must then be operated in order to initiate an alarm. See Figure 3-3.

Authorized Engineering Information 3-8-1985.

Copyright National Electrical Manufacturers Association
Provided by IHS under license with NEMA
No reproduction or networking permitted without license from IHS
Not for Resale

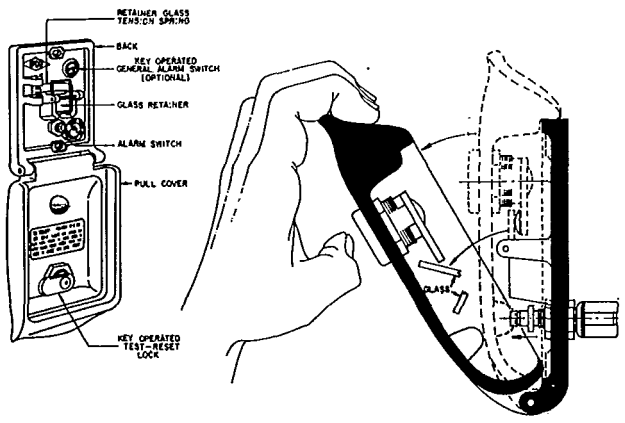

Figure 3-2
SINGLE ACTION STATION

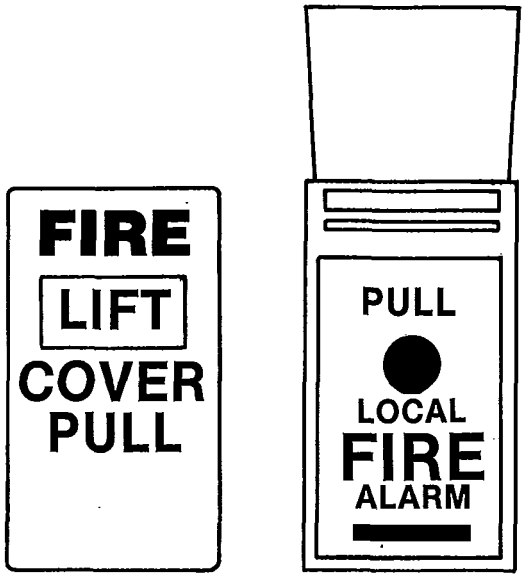

Figure 3-3
DOUBLE ACTION STATION

3.3 AUTOMATIC ALARM INITIATING DEVICES

Automatic alarm initiating devices may be actuated by various factors that may be present as the result of a fire. These factors may be direct effects such as heat, smoke, flame radiation or combinations of these effects. Devices sensing these direct effects of fire are generally referred to as automatic fire detectors. Automatic initiation may also be accomplished as the result of detecting flow of water in a sprinkler pipe, either by a vane deflected by the water or a pressure-operated switch mounted on a sprinkler system dry pipe valve. In addition, pressure switches may be mounted on fixed fire suppression systems that suppress fires by releasing such agents as halon, carbon dioxide, dry chemicals, or foam. These devices are generally referred to by their direct function (i.e., flow switch, pressure switch, and so forth).

3.3.1 Classification of Automatic Fire Detectors

3.3.1.1 By Combustion Product Detected

a. *Heat Detector.* A device which detects abnormally high temperature or rate-of-temperature rise.
b. *Smoke Detector.* A device which detects air-borne particles of combustion.
c. *Flame Detector.* A device which detects the infrared, or ultraviolet, or visible radiation produced by a fire.

3.3.1.2 By Physical Arrangement of Detector

a. *Line-Type Detector.* A device in which detection is continuous along its length. Typical examples are rate-of-rise pneumatic tubing detectors, projected beam smoke detectors, and heat-sensitive cable.
b. *Spot-Type Detector.* A device whose detecting element is concentrated at a particular location. Typical examples are bimetallic heat detectors, fusible alloy heat detectors, certain pneumatic rate-of-rise heat detectors, certain smoke detectors, and thermoelectric heat detectors.
c. *Duct Smoke Detector.* A duct smoke detector uses the velocity pressure drop across sampling tubes located in an air stream to move air past a smoke detector. A spot type detector with a velocity shield is also available for direct insertion into a duct.
d. *Air Sampling Type Detector.* A sampling type detector consists of piping or tubing distribution from the detector unit to the area(s) or zones to be protected. An air pump draws air from the protected area back to the detector through the air sampling ports and piping or tubing. At the detector, the air is analyzed for fire products. Air sampling detectors can be arranged to sequentially sample and analyze air from multiple zones.

3.3.1.3 By Operating Modes

a. *Non-Restorable Detector.* A device whose sensing element is designed to be destroyed by the process of detecting a fire.

Copyright National Electrical Manufacturers Association
Provided by IHS under license with NEMA
No reproduction or networking permitted without license from IHS
Not for Resale

b. *Restorable Detector.* A device whose sensing element is not ordinarily destroyed by the process of detecting heat. Restoration may be manual or automatic if the sensing element is not damaged by exposure to fire.

3.3.2 Heat Sensing Fire Detectors

3.3.2.1 Operating Principles

3.3.2.2 Fixed Temperature Detector

A fixed temperature detector is a device which will respond when its operating element becomes heated to a predetermined level. See Figure 3-4.

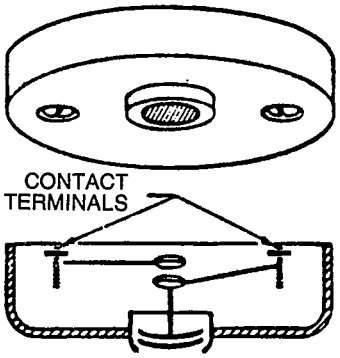

A bimetallic, snap-action disc, fixed temperature detector. Snap action disc is in the raised center portion of the device.

Figure 3-4
FIXED TEMPERATURE DETECTOR

3.3.2.2.1 Thermal Lag. When a fixed temperature device operates, the temperature of the surrounding air will always be higher than the operating temperature of the device itself. This difference between the operating temperature of the device and the actual air temperature is commonly referred to as "thermal lag," and is a function of the rate at which the temperature is rising.

3.3.2.2.2 Typical examples of fixed temperature sensing elements are:

a. *Bimetallic.* A sensing element comprised of two metals having different coefficients of thermal expansion arranged so that the effect will be deflection in one direction when heated and in the opposite direction when cooled.

b. *Electrical Conductivity.* A sensing element comprising an electrical resistor (thermistor) whose resistance varies as a function of temperature. See Figure 3-5.

c. *Fusible Alloy.* A sensing element of a special composition (eutectic) metal which melts rapidly at the rated temperature. It is employed to restrain operation of an electrical contact until the point of fusion is reached.

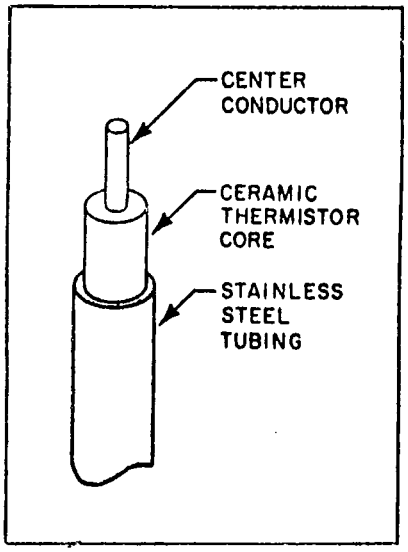

Figure 3-5
ELECTRICAL CONDUCTIVITY SENSING ELEMENT

d. *Heat-Sensitive Cable.* A line-type device whose sensing element comprises, in one type, two current-carrying wires held separated by a heat-sensitive insulation which softens at the rated temperature, thus allowing the wires to make electrical contact. In another type, a single wire is centered in a metallic tube and the intervening space filled with a substance which, at a critical temperature, becomes conductive, thus establishing electrical contact between the tube and the wire. See Figure 3-6.

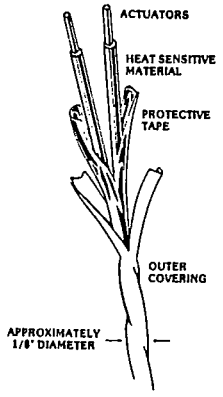

Figure 3-6
HEAT SENSITIVE CABLE

Copyright National Electrical Manufacturers Association
Provided by IHS under license with NEMA
No reproduction or networking permitted without license from IHS
Not for Resale

3.3.2.3 RATE COMPENSATION DETECTOR. A rate compensation detector is a device which will respond when the temperature of the air surrounding the device reaches a predetermined level, regardless of the rate of temperature rise. See Figure 3-7.

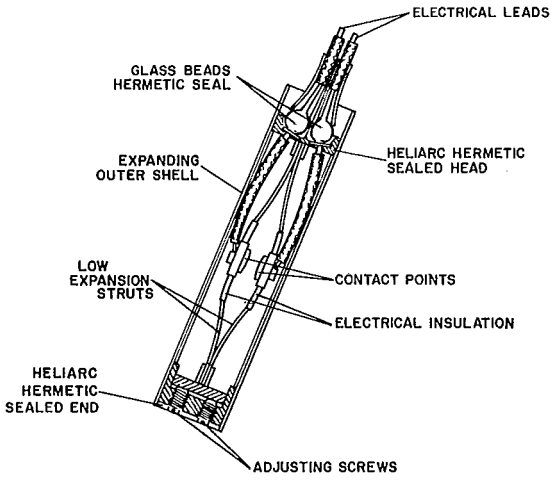

Figure 3-7
SCHEMATIC OF RATE-COMPENSATION DETECTOR

3.3.2.3.1 A typical example is a spot-type detector with a tubular casing of a metal that tends to expand lengthwise as it is heated, and an associated contact mechanism that will close at a certain point in the elongation process. A second metallic element inside the tube exerts an opposing force on the contacts, tending to hold them open. The forces are balanced in such a way that on a slow rate of temperature rise, there is more time for heat to penetrate to the inner element, which therefore inhibits contact closure until the total device has been heated to its rated temperature level. However, on a fast rate of temperature rise, there is not as much time for heat to penetrate to the inner element, which therefore exerts less of an inhibiting effect, so that contact closure is obtained when the total device has been heated to a lower level. This, in effect, compensates for thermal lag.

3.3.2.4 RATE-OF-RISE DETECTOR. A rate-of-rise detector is a device which will respond when the temperature rises at a rate exceeding a predetermined amount (usually 15 degrees F per minute).

3.3.2.4.1 Typical examples of rate-of-rise detectors are:

a. *Pneumatic Rate-of-Rise Tubing.* A line-type detector comprising small diameter tubing, usually copper, which is installed on the ceiling or high on the walls throughout the protected area. The tubing is terminated in a detector unit, containing diaphragms and associated contacts set to actuate at a predetermined pressure. The system is sealed except for calibrated vents which compensate for normal changes in ambient temperature. See Figure 3-8.

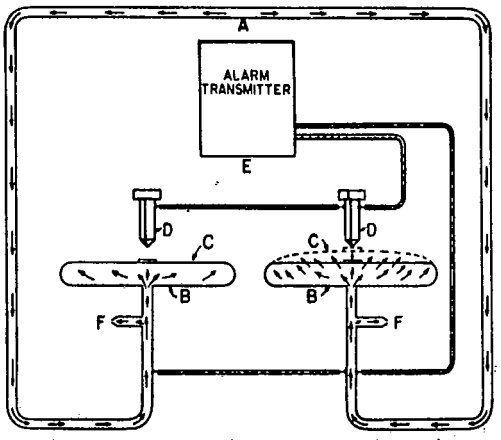

Fig. 12-3E. A pneumatic tubing system operating on the rate-of-rise principle. The copper tubing (A) is fastened to ceilings or walls in a continuous loop and terminates at both ends in chambers (B) having flexible diaphragms (C) which control electrical contacts (D). When air in the tubing expands under the influence of heat, pressure builds within the chambers causing the diaphragms to move and close a circuit to alarm transmitter (E). Vents (F) compensate for small changes in pressure in the tubing brought about by small changes in temperature in the protected spaces.

Figure 3-8
PNEUMATIC RATE-OF-RISE TUBING

b. *Spot-Type Rate-of-Rise Detector.* A device consisting of an air chamber, diaphragm, contacts, and compensating vent in a single enclosure. The principle of operation is the same as that described under (a) above. Some spot type rate-of-rise detectors also incorporate an element using eutectic solder that is arranged to melt at a fixed temperature and cause contacts to close. These detectors are referred to as fixed temperature and rate-of-rise detectors and combine the two principles of operation in a single unit. See Figure 3-9.

3.3.3 Smoke Sensing Fire Detectors

3.3.3.1 CLASSIFICATION OF DECTECTORS BY OPERATING PRINCIPLES

Copyright National Electrical Manufacturers Association
Provided by IHS under license with NEMA
No reproduction or networking permitted without license from IHS
Not for Resale

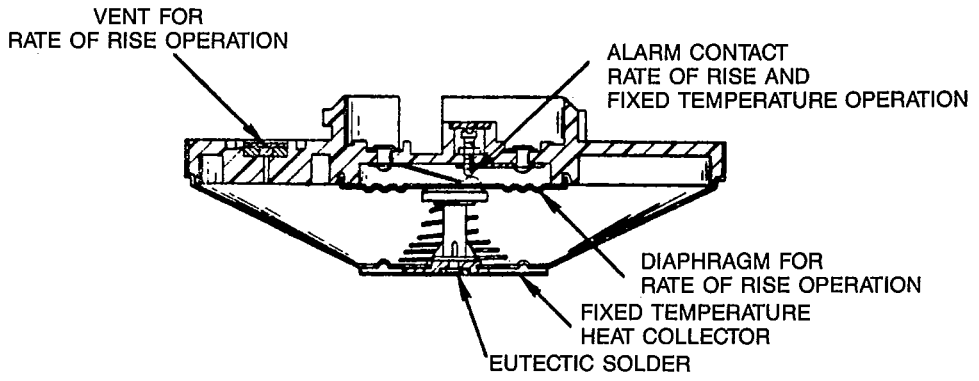

Figure 3-9
COMBINATION SPOT-TYPE RATE-OF-RISE AND FIXED TEMPERATURE DETECTOR

3.3.3.2 Ionization Smoke Detectors

Smoke detectors utilizing the ionization principle are usually of the spot-type. An ionization smoke detector has a small amount of radioactive material which ionizes the air in the sensing chamber, thus rendering it conductive and permitting a current flow through the air between two charged electrodes. This gives the sensing chamber an effective electrical conductance. When smoke particles enter the ionization area, they decrease the conductance of the air by attaching themselves to the ions, causing a reduction in mobility. When the conductance is less than a predetermined level, the detector responds. See Figure 3-10. Before detectors are placed on the market, the U.S. Nuclear Regulatory Commission performs a radiation safety analysis to determine that detectors meet safety requirements.

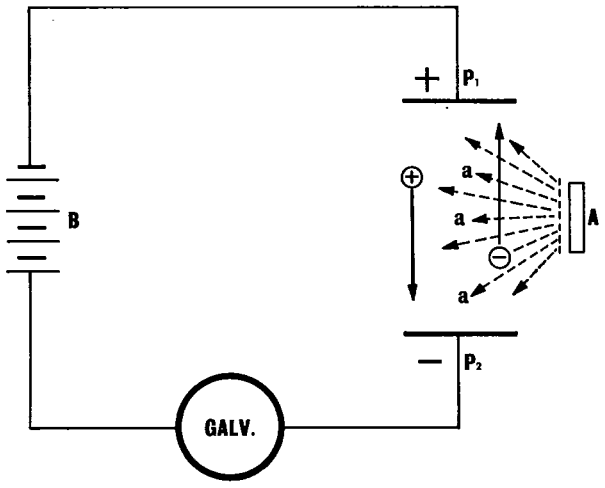

Figure 3-10
CURRENT FLOW THROUGH IONIZATION DETECTOR SENSING CHAMBER

3.3.3.3 Photoelectric Light Obscuration Smoke Detectors

Smoke detectors utilizing the photoelectric light obscuration principle consist of a light source which is projected onto a photosensitive device. Smoke particles between the light source and the photosensitive device reduce the light reaching the device, causing the detector to respond.

3.3.3.3.1 Projected Beam Smoke Detector

A line type light obscuration smoke detector where the light beam is projected across the area to be protected. See Figure 3-11.

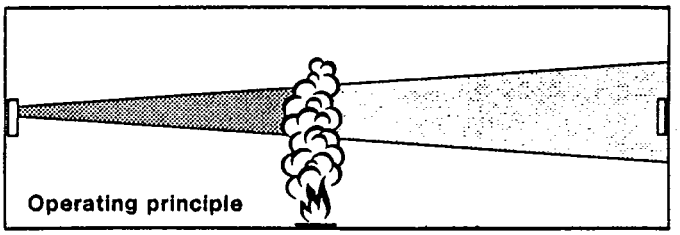

Figure 3-11
LINEAR BEAM SMOKE DETECTOR

3.3.3.4 Photoelectric Light Scattering Smoke Detectors

Smoke detectors utilizing the photoelectric light scattering principle are usually of the spot-type. They contain a light source and a photosensitive device so arranged that light rays do not normally fall onto the photosensitive device. When smoke particles enter the light path, light strikes the particles and is scattered onto the photosensitive device, causing the detector to respond. See Figure 3-12.

Copyright National Electrical Manufacturers Association
Provided by IHS under license with NEMA
No reproduction or networking permitted without license from IHS
Not for Resale

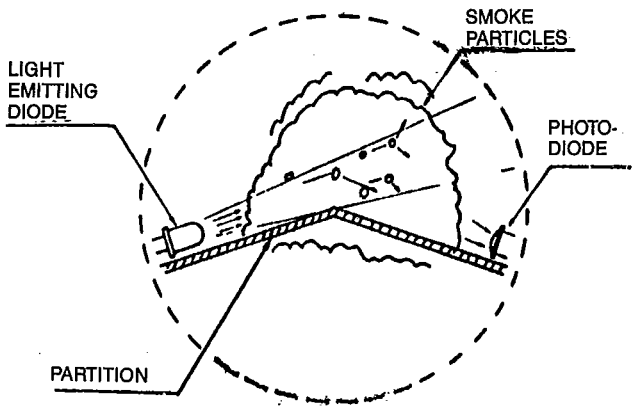

Figure 3-12
PHOTOELECTRIC LIGHT SCATTERING DETECTOR

3.4 SWITCHES ON AUTOMATIC FIRE SUPPRESSION SYSTEMS

3.4.1 Waterflow Switch on Sprinkler System

Another type of alarm initiating device which may be connected to a fire alarm system is a sprinkler waterflow switch of either the pressure or vane-type. The waterflow switches illustrated in Figure 3-13 are of the vane-type and are generally used in wet-pipe sprinkler systems. Operation of a sprinkler head causes water to flow in the system moving the vane. After an adjustable retard period to compensate for water surges, the switch or transmitter will operate. Vane-type switches should be installed in the size and type of pipe for which they are listed.

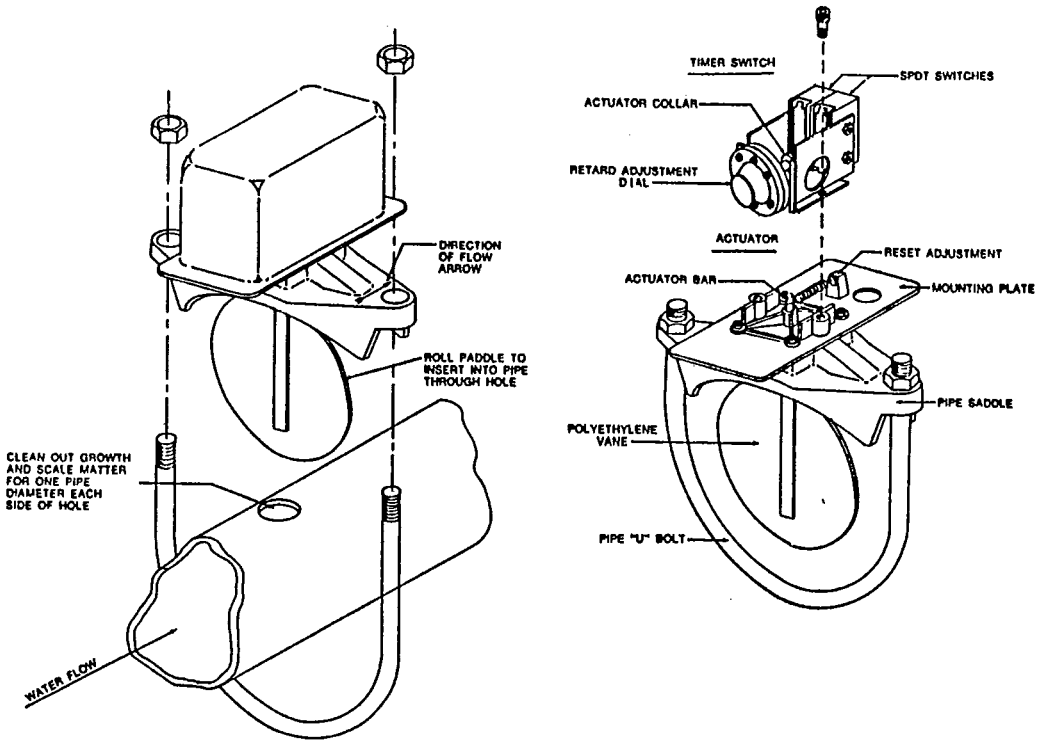

Figure 3-13
WATER FLOW SWITCH ON SPRINKLER SYSTEM

Copyright National Electrical Manufacturers Association
Provided by IHS under license with NEMA
No reproduction or networking permitted without license from IHS
Not for Resale

Vane-type waterflow switches should not be used in drypipe systems, deluge systems, or preaction systems because the vane and mechanism could be damaged by the sudden rush of water when the control valve opens. A pressure actuated waterflow switch is used on these systems.

3.4.2 Alarm Switches on Fire Suppression Systems

Fixed fire suppression systems of the halon, carbon dioxide, dry chemical, or foam type have pressure or flow switches which actuate upon operation of the suppression system.

Authorized Engineering Information 3-8-1985.

3.5 INSTALLATION WIRING

The primary rule of installation wiring is:

"Follow the manufacturer's instructions."

This rule cannot be overemphasized. As noted in Section 2, the requirement for electrical supervision of the installation wires and their connections to initiating devices and indicating appliances makes fire alarm system wiring very different from general wiring.

A manufacturer's installation wiring drawing routes wires and makes connections in a certain manner because of the supervision requirements. Any variance from the manufacturer's drawings might cause a portion of a circuit to be unsupervised and, if an open or short occurred, prevent the circuit from performing its intended function, and possibly lead to loss of life.

The rules of supervision are complex. Unless an installer specializes in fire alarm system installations, he is not likely to be familiar with them.

There are enough exceptions to the rules that an installer should not assume one particular system must be wired in the same manner as a similar system worked on previously. It is possible that hardware that appears to be identical in two different buildings is wired radically different.

This may be because one building may have used a remote annunciator that was required by some authority having jurisdiction and the other building used a similar appearing annunciator that was considered "supplementary" to a required fire alarm system. In fire alarm signaling systems, installation wiring for "supplementary" equipment is not required to be supervised. However, a set of rules requires that an open, short, or ground on such "supplementary" equipment wiring should not affect any function of the required system.

Since there are at least a dozen accepted exceptions to wire installation supervision, and not all may apply to every job, how is the installer to interpret the requirements? Simple. He uses the primary rule of installation wiring: "Follow the manufacturer's instructions."

Now, having restated the primary rule, a word of caution. Fire alarm system installation drawings take two forms. One form is where the manufacturer of a control panel or a qualified installer creates an installation wiring diagram for a particular building. The other form is where a manufacturer of the control panel or other components in the system furnishes "typical" installation drawings.

An installer that uses the "typical" drawings takes on the responsibility of applying the "typical" drawings in accordance with local code requirements. The manufacturer's drawings will show how the unit is to be connected into a system. However, how to interconnect devices on the same floor but served by a different riser may not always be shown. Nor may subtle differences about "supplementary" equipment installation wiring be shown. Generally, installers using typical drawings should be well qualified in fire alarm system installation requirements or be under the direct supervision of someone who is well qualified.

For initiating devices, Figures 3-14 and 3-16 show incorrectly connected devices. Figures 3-15 and 3-17 show them correctly connected. In both cases they will operate correctly for alarm purposes. However, note that in Figures 3-14 and 3-16, the device could become disconnected from the supervised installation wires without disturbing the supervised circuit. In Figures 3-15 and 3-17, none of the connections can be broken without breaking the supervised circuit.

The installer should note that in Figure 3-17, the manufacturer's pigtail wires on either circuit side of the device are very likely "Y" connected within the device and would seem to be a contradiction to the requirements. However, this is not *true* because the supervision requirements apply to the connections made at time of installation. The manufacturing connections are made under controlled conditions with skilled technicians, usually soldered, and inspected. In addition, approved devices are subject to quality control procedures acceptable to the approving authority.

Copyright National Electrical Manufacturers Association
Provided by IHS under license with NEMA
No reproduction or networking permitted without license from IHS
Not for Resale

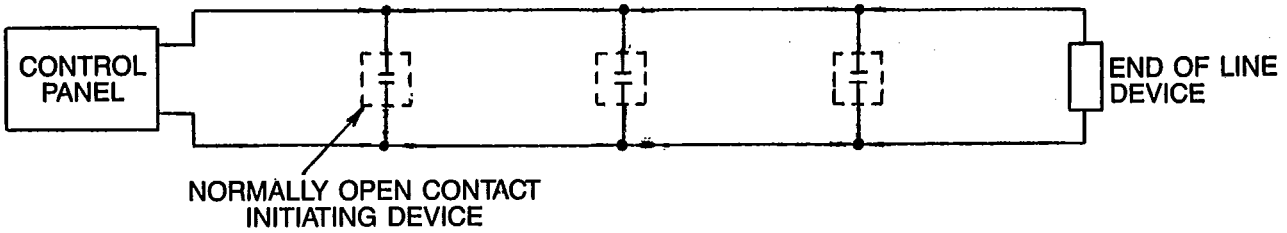

Figure 3-14
INITIATING DEVICES—INCORRECTLY WIRED

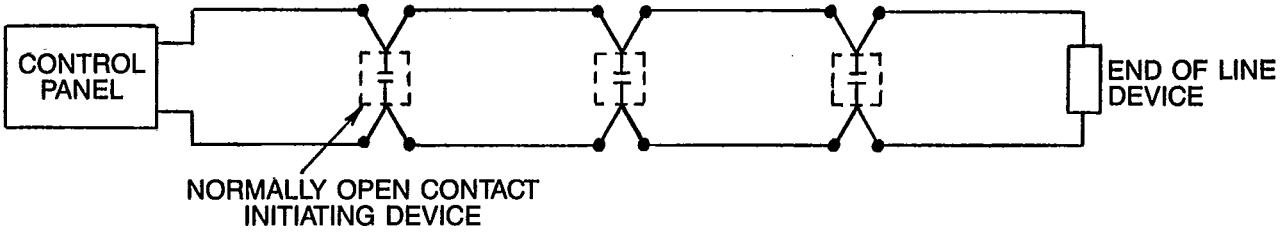

Figure 3-15
INITIATING DEVICES CORRECTLY WIRED

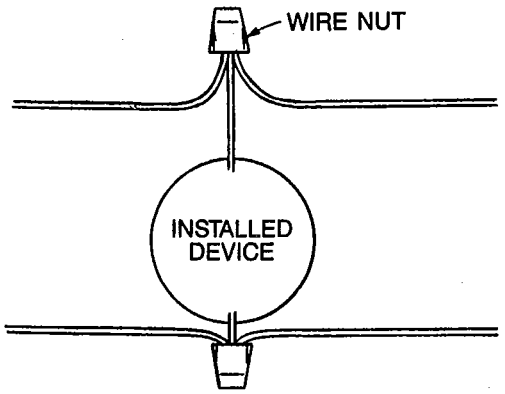

Figure 3-16
PIGTAIL CONNECTIONS—INCORRECT WIRING METHOD

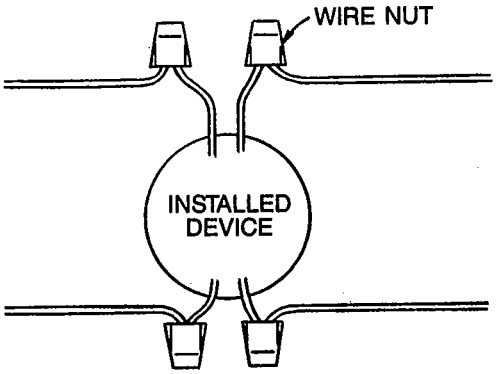

Figure 3-17
PIGTAIL CONNECTIONS—CORRECT WIRING METHOD

Copyright National Electrical Manufacturers Association
Provided by IHS under license with NEMA
No reproduction or networking permitted without license from IHS
Not for Resale

Another approach for showing the difference between incorrect and correct wiring methods is shown in Figures 3-18 and 3-19. These are shown to illustrate the effect the correct wiring method can have on the number of wires in the riser. This also illustrates the expense that could be incurred to correct a faulty installation.

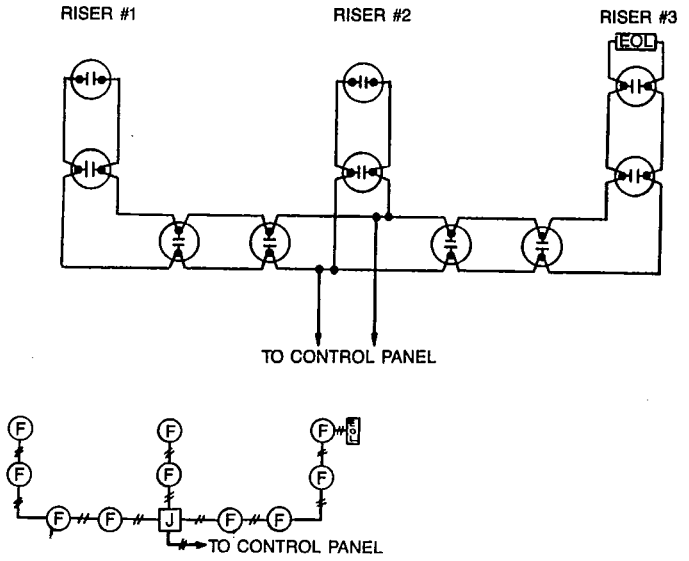

Figure 3-18
INCORRECT WIRING METHOD FOR MULTIRISER INITIATING DEVICE CIRCUIT

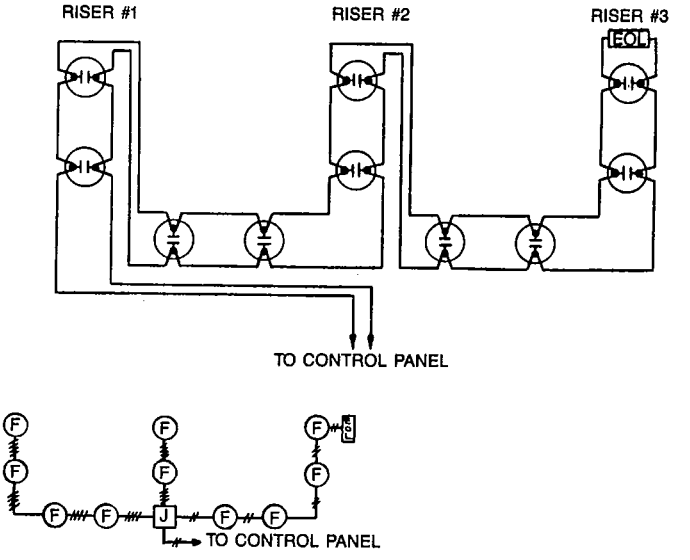

Figure 3-19
CORRECT WIRING METHOD FOR MULTIRISER INITIATING DEVICE CIRCUIT

Copyright National Electrical Manufacturers Association
Provided by IHS under license with NEMA
No reproduction or networking permitted without license from IHS
Not for Resale

The figures used show simple initiating devices. A minimum of 4 connections should be made to each device. Some initiating devices, such as smoke detectors, may require a power connection that also requires 4 connections.

Some smoke detectors have relays built in for additional functions. Depending on the application, another 4 connections may be required for the relay contacts. To show all the variations of connections to smoke detectors is beyond the scope of this manual. See NFPA 72H, *Guide for Testing Procedures for Protective Signaling Systems.*

The installer need not be fully knowledgeable of all the ramifications of wiring requirements because of supervision, but should be aware of them as they relate to why manufacturers or other system suppliers show their wiring the way they do.

As this section began, we restate the primary rule of installation wiring:

"Follow the manufacturer's instructions."

Authorized Engineering Information 3-8-1985.

Copyright National Electrical Manufacturers Association
Provided by IHS under license with NEMA
No reproduction or networking permitted without license from IHS
Not for Resale

Section 4

ALARM INDICATING APPLIANCES

4.1 GENERAL

Alarm indicating appliances provide audible or visible, or both, notification of an alarm condition to building occupants. There are several types of alarm signal appliances:

Audible alarm signal appliance
Visible alarm signal appliance
Visible alarm signal annunciators
Audible/visible (combination) alarm signal appliances

Alarm indicating appliances should be installed in the protected property in accordance with local codes, architect's plans, requirements of authorities having jurisdiction, the manufacturer's recommendations, and the basic requirements of the NFPA Standards insofar as they apply to the installation.

Authorized Engineering Information 3-8-1985.

4.2 ALARM SIGNAL APPLIANCES

All audible and visible alarm signal appliances are required by NFPA Standards to be installed on supervised circuits. In addition to the general description of supervision requirements discussed in Section 2, a wire-to-wire short on an alarm signal appliance installation wiring circuit should sound a trouble signal. There are some exceptions. One is a circuit to an alarm indicating appliance installed in the same room as the control unit where the wires are installed in conduit or equivalently protected against mechanical damage. Another is where the appliance is installed for a supplementary purpose. An example might be when an audible or visible, or both, appliance is mounted adjacent to a manual station to deter false alarms rather than to indicate a need for evacuation.

Authorized Engineering Information 3-8-1985.

4.3 AUDIBLE ALARM SIGNAL APPLIANCES

4.3.1 Bells

Bells may be used for fire alarm signals where their sound is distinctive and will not be confused with similar audible signals used for other purposes. Bells may be operated by either alternating or direct current, may be of the single-stroke or vibrating type, and may be connected in either series or parallel.

Single-stroke bells are used to provide audible coded signals. Continuous vibrating types are used primarily for noncoded, continuous-ringing applications. They also may be used to provide coded audible signals.

Bells may be provided with 4-inch through 12-inch gongs (in 2-inch increments). The 6- and 10-inch sizes are the most commonly used. Bells with 4-inch gongs are reserved for use as trouble signals, usually. Generally, the larger the diameter of the gong, the lower the frequency and the louder the audible signal (expressed in terms of decibels [dB]).

Bells are usually of the underdome type and can be mounted on standard conduit boxes. When bells must be concealed, recessed, and/or mounted flush with the wall, special boxes and grilles are necessary.

4.3.2 Horns

Horns are provided for applications which require louder or more distinctive signals, or both. Horns may be operated by either alternating or direct current and may be connected in series or parallel. Horns may require more operating power than bells, and care should be exercised to see that circuits are electrically compatible when powering both types of signals.

Horns are usually of the continuous vibrating type and may be used to provide either coded or noncoded audible alarm signals. They may be of the surface (grille), flush, semiflush, single projector, double projector, or trumpet type.

In very noisy areas, resonating, air-powered or motor-driven horns are sometimes used because of their inherently high decibel output.

Resonating horns can be operated on alternating or direct current, produce a loud piercing tone, and either coded or noncoded operation may be provided.

Air-powered horns using valves are controlled by electrical solenoids powered by alternating or direct current. Either coded or noncoded operation may be provided.

Motor-driven horns are not practical for providing coded output signals and are more widely used for continuous signals. They are particularly effective under "rolling" conditions where power is periodically applied and removed to vary the motor speed and the sound pitch.

4.3.3 Chimes

Chimes are soft-toned appliances. They normally are used in applications where panic or other undesirable actions might result from the use of loud audible alarm signals. Their use is especially adaptable to such areas as nurses' stations in hospitals to alert only authorized

Copyright National Electrical Manufacturers Association
Provided by IHS under license with NEMA
No reproduction or networking permitted without license from IHS
Not for Resale

personnel.

They may be operated by alternating or direct current, and may be connected in series or parallel in the same manner as bells and horns.

4.3.4 Buzzers

Buzzers also may be operated from an ac or dc supply. They generally are used for trouble signals, rather than alarm signals. They primarily are intended to provide a continous sound and seldom are used for coded signals. Direct current buzzers are provided with self-interrupting contacts, whereas alternating current buzzers are usually of the contactless type.

4.3.5 Sirens

Sirens usually are limited to outdoor applications but are sometimes used in extremely noisy indoor areas. Sirens are motor-driven, or electronic appliances and may be either alternating or direct current operated. They are not very practical for use as coded audible signals.

4.3.6 Speakers

Speakers are frequently used as fire alarm signaling appliances. Since they reproduce electronic signals, they can be made to sound like any mechanical signaling device and have the capability of reproducing unique sounds that are not practical on mechanical appliances. In addition, they may be used to give live or recorded voice instructions. Speakers are either direct radiating cone, or of the compression driver and horn type. Speakers are generally operated from audio amplifiers delivering standard output line levels of 70.7 or 25 volt rms. The speakers are driven by an electronic tone generator, microphone, tape player, or voice synthesizer and an electronic amplifier. Two types are in wide use:

Integral—that type in which the tone generator, amplifier, and speaker are enclosed in a common housing.

Remote—that type in which the speaker is energized from a remotely located tone generator, microphone, tape player, and/or voice synthesizer and amplifier.

Authorized Engineering Information 3-8-1985.

4.4 VISIBLE ALARM SIGNAL APPLIANCES

Visible alarm signal appliances of incandescent, strobe, or quartz Halogen variety may be used alone or in conjunction with audible alarm appliances. Visible alarm indicators are effective in high noise areas, where the deaf are to be alerted, or where attention directed to the light unit can provide additional information.

In most applications, visible alarm appliances are most effective when used in a flashing mode. The flashing effect can be accomplished by periodically interrupting current to the appliance, rotating a beam of light as is done on many emergency vehicles, using a strobe technique, or even any combination of these methods.

4.4.1 Visible Alarm Signal Annunciators

Annunciators can be used with either coded or zoned noncoded systems to provide indication of the initiating device or zone from which the alarm originated.

4.4.2 Lamp Annunciators

In lamp annunciators, the zones or areas from which alarms originate are indicated by the lighting of lamps or light emitting diodes (LEDs).

1. Lamp annunciators may be provided with different colored lenses, usually red for alarm, amber for trouble, and green or white for power-on indications.
2. Back-lighted annunciators are used to light up information on a window or to provide illumination for a graphic annunciator.
3. Graphic annunciators have lamps located in a map or floor plan to provide an easier means of identifying the particular area or zone affected. The area from which the alarm has been initiated can be indicated by a bulls-eye-type lamp located within the area or by back lighting the entire affected area or zone.

4.4.3 Drop-Type Annunciators

Drop-type annunciators use a target which drops in front of a window when the target coil is energized (or de-energized for supervisory annunciation). The target remains down until the annunciator is reset manually, thus providing a simple means of lock-in annunciation. A particular advantage of this type of annunciator lies in its low power consumption requirements because, except for the supervised application, it uses power only momentarily when operated.

4.4.4 Strobe Lights

Strobe lights operate on the energy discharge principle

Copyright National Electrical Manufacturers Association
Provided by IHS under license with NEMA
No reproduction or networking permitted without license from IHS
Not for Resale

to produce a high intensity flash of short duration. These lights are very efficient; for example, 8000 Candle-power for 1 watt input power. The short bright flash is not only attention-getting, but is effective when general visibility is low.

Strobe appliances come in a wide range of light intensities and ac or dc operating voltages. Repetition rates are usually between one and five flashes per second.

4.4.5 Incandescent Lamp

Incandescent lamp alarm appliances may be used to provide coded or noncoded visible indication. They may be used in the continuous or repetitive flashing modes.

4.4.6 Solid State Lamp

Solid state luminous devices are becoming more prevalent because of high reliability, relatively low current rating and availability in various colors. A light emitting diode (LED) lamp is an example. These are inherently low-current devices adaptable to solid state energizing circuits. Annunciator panel and indicating lamps that formerly used incandescent lamps are being replaced by solid state lamps.

4.4.7 Quartz Halogen Lamp

Quartz Halogen lamps draw relatively high current but are an efficient source of high intensity light. They may be used in repetitive or continous high-intensity operation. Quartz Halogen devices are particularly adaptable as the light source for rotating reflector flashing lamps.

4.4.8 Fluorescent Lamp

Fluorescent lamps are used primarily as sources of distributed or diffused back lighting in continous warning signals that, when activated, convey a printed warning or direction message. Because of complex starting circuits and relatively low brilliance, fluorescent signal appliances are usually not used in coded or flashing warning applications.

Authorized Engineering Information 3-8-1985.

4.5 AUDIBLE/VISIBLE ALARM SIGNAL APPLIANCES

The audible and visible functions can be combined in one unit to produce both sound and light from a single appliance. For example, the sounder can be a horn, bell, or speaker. The light can be incandescent, strobe, or other type, depending on the application. Advantages of the combined signals are:

a. The visible signal localizes the particular audible alarm appliance that is operating.
b. The visible signal produces a recognizable alarm when the audible signal may be obscured by an ambient noise level.
c. Persons having impaired hearing can see the visible portion of the alarm signals.

The combined signals are available in all voltages up to line voltage. Twenty-four volt dc units are the most prevalent. Polarized versions facilitate line supervision. Two or four-wire connected types permit application of either a common or separate power supply.

Authorized Engineering Information 3-8-1985.

4.6 PERMANENT RECORDERS

Permanent recorders are used on fire alarm systems as a means to indicate the location of an alarm as well as to provide a permanent record of the time and date an alarm occurred. As an indicator of the location of an alarm, a recorder that creates a hard-copy record performs the same function as a lamp annunciator.

In many systems, the recorder may be used to record a trouble condition, and other events that are related to the receipt of an alarm. Typically, these might be alarm indicating circuit energization, fan shut down, door closings, or other life safety functions that may have taken place either automatically or because of operator actions.

4.6.1 Punch Registers

Punch registers follow coded current pulses to either imprint or punch the code on a paper tape. During the receipt of the signal, the time and date is printed automatically on the tape by the time stamp.

The paper tape is on a reel. Usually, the used portion of the tape is stored on a motor-driven take-up reel.

4.6.2 Print Recorders

Print recorders have replaced punch recorders almost entirely in today's modern fire alarm systems. Upgrades and extension or retrofits of older systems are likely to replace the mechanical punch recorder with an electronically operated printer. New systems, using solid state electronic or microprocessor/mini-computer technology, or both, will use a wide variety of electronic printers.

Copyright National Electrical Manufacturers Association
Provided by IHS under license with NEMA
No reproduction or networking permitted without license from IHS
Not for Resale

Print recorders range from small hand size units similar to those found on small printing calculators up to large, sophisticated, high speed printers found on major computing systems.

Proprietary systems (NFPA 72D) requires two printers, one of which is reserved for fire alarm signals when no other visual means of indicating an alarm is provided.

4.6.3 Time Stamps

Time stamps can be used with punch registers and print recorders. They provide an accurate record of the time and date of receipt of the signal. They are usually automatically operated when an alarm signal is received. Most new installations using print recorders generate the time and date electronically and do not use separate time stamps.

Authorized Engineering Information 3-8-1985.

4.7 INSTALLATION WIRING

Section 3 of this manual stated the primary rule of installation wiring as:

"Follow the manufacturer's instructions."

It is repeated here again because this rule cannot be overemphasized.

The supervision requirements that affect wire counts and types of connections on indicating appliance circuits are identical to those for initiating device circuits. All that was said in Section 3 on installation wiring applies and is not repeated here. The reader, therefore, is referred to 3.5, Installation Wiring. The only difference would be in the internal construction of the connected components. Initiating devices are essentially normally open contact switches or their electronic equivalent. Indicating appliances are power-using devices. The wire counts and method of connections are identical to the diagrams in Section 2 of this manual.

Figures 4-1, 4-2, and 4-3 illustrate this equivalency and no further discussion on these points is required.

The form of alarm indicating appliance has been changing over the years. Instead of the traditional bell or horn, electricians are finding themselves installing loudspeakers. Only those speakers bearing labels from nationally recognized testing laboratories, indicating that the appliance is intended for fire alarm system use, should be installed on a fire alarm system. Such labeling is normally required by the authority having jurisdiction and indicates that the appliance has been tested to the temperature, humidity, and life cycle requirements considered necessary for use in life safety systems.

Sometimes, speaker systems are used in what are termed combination systems where the speakers are used for paging or background music. When this is the case, the nonfire use should not interfere with the fire alarm use. In addition, a fault in the non-fire alarm system components should not cause the speakers to be inoperative; the audio system should be fully operational whenever it may be needed for a fire alarm emergency. When combination systems are used, it is necessary to comply with all requirements for fire alarm installation wiring and supervision.

If an unsupervised audio system is being used to sound an evacuation signal, it is required by NFPA standards that the fire alarm system provide sufficient and supervised alarm signaling capability to perform the same function in the event the audio system was disabled.

No fire alarm installation wiring requirements are waived in such combination systems. This would not prevent an unsupervised audio system from being used to sound an evacution alarm if sufficient alarm signals were available on a required fire alarm system to perform the same function even if the audio system were disabled.

Alarm indicating circuits today are becoming quite complex. This is particularly true in high-rise buildings where each floor is usually a separate circuit. As in all fire alarm system installation wiring, the installer should follow the primary rule of installation wiring:

"Follow the manufacturer's instructions."

Authorized Engineering Information 3-8-1985.

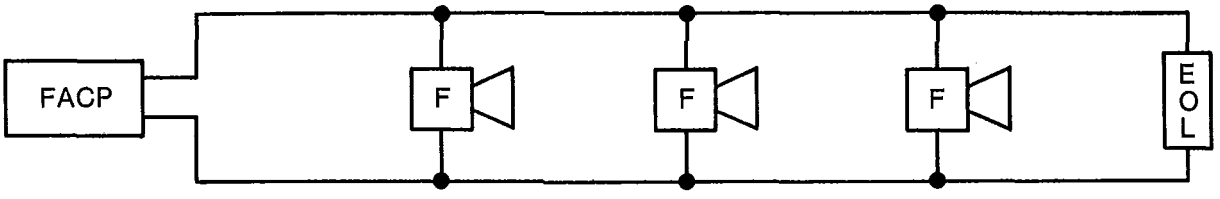

Figure 4-1
INCORRECT WIRING METHOD TYPICAL AUDIBLE SIGNAL CIRCUIT

Copyright National Electrical Manufacturers Association
Provided by IHS under license with NEMA
No reproduction or networking permitted without license from IHS
Not for Resale

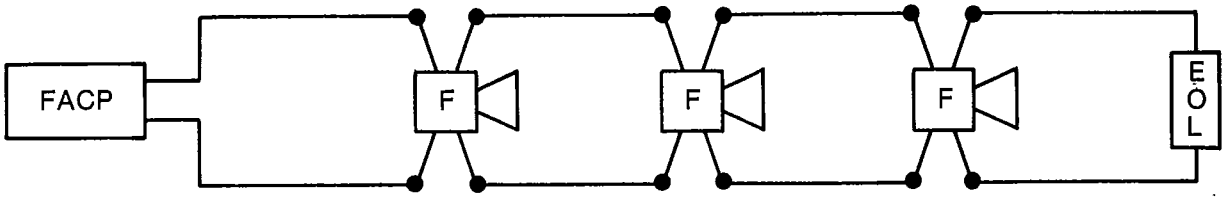

Figure 4-2
CORRECT WIRING METHOD TYPICAL AUDIBLE SIGNAL CIRCUIT

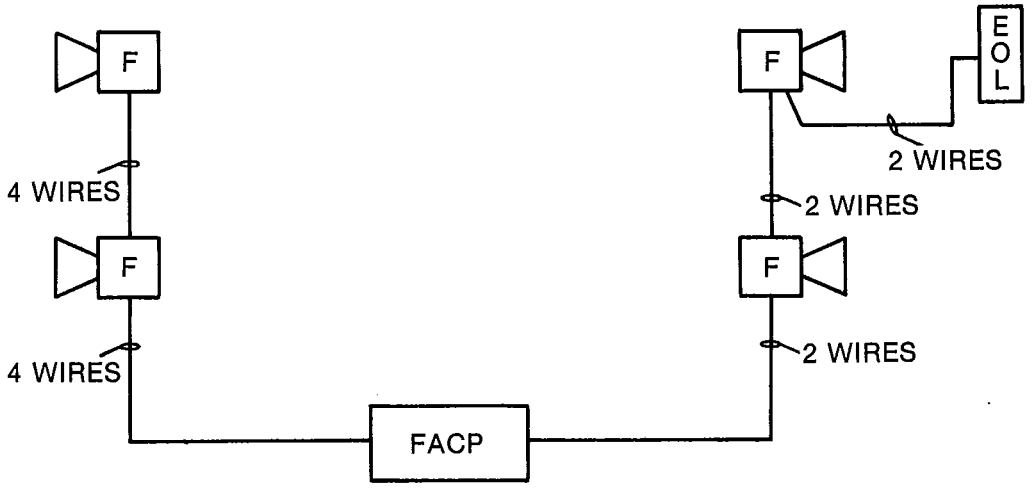

Figure 4-3
SINGLE AUDIBLE SIGNAL CIRCUIT WITH TWO RISERS

Copyright National Electrical Manufacturers Association
Provided by IHS under license with NEMA
No reproduction or networking permitted without license from IHS
Not for Resale

Section 5

INSTALLATION INSTRUCTIONS FOR FIRE ALARM SYSTEMS

5.1 GENERAL

Local codes, architects plans, or the authority having jurisdiction may specify what type of equipment can be used, where the fire alarm system components should be located, and how the circuits should be arranged. In addition, the information supplied by the manufacturer and the applicable requirements of the NFPA Standards listed in the front of this publication should be followed.

Authorized Engineering Information 3-8-1985.

5.2 LOCATION OF SYSTEM COMPONENTS

5.2.1 General

Most fire alarm systems are installed to meet requirements of applicable laws. The authorities enforcing these laws should be consulted for specific approval of installation methods and component locations. This manual may not be in total agreement with their requirements because the manual reflects NFPA Standards and trends in the industry in effect at the time of publication.

5.2.2 Control Panel

The mounting location of the fire alarm system control unit and associated peripheral indicating equipment should be carefully chosen with consideration given to system operating requirements. Preferably, the central equipment should be located in an area of low fire risk. For the safety of the operator, who may be required to remain at this post after the general evacuation of the occupants, the control unit should be located on the ground floor within easy reach of a fire exit.

The control unit cabinet(s) can be floor-mounted or installed on a vertical wall in a clean, dry, unobstructed location. The center of the cabinet should be at a convenient height from the finished floor for ease of operator usage. Consideration also should be given to the fact that some panels exhibit a slight hum which is inherent in some power supplies and certain alternating current components. These types of panels should be located where this hum would not be objectionable to the operator.

5.2.3 Alarm Initiating Devices

Manual Stations should be distributed throughout the protected area so that they are unobstructed, readily accessible, and located in the normal path of exit from the area. Where a fire alarm system is required or regulated by law, manual stations should be located as directed and approved by the local authority having jurisdiction. Since 1979, NFPA Standards have required that an adequate number of stations shall be provided on each floor so that there is at least one station on the first floor and on each succeeding alternate floor, except that one station should be provided for each floor where the area is 10,000 square feet or more. Also, additional stations should be provided so that the travel distance to the nearest station will not be in excess of 200 feet. Each station should be securely mounted and be not less than 3½ feet nor more than 5 feet from the finished floor.

Automatic Fire Detectors should be installed in all areas where required by the appropriate NFPA Standard or the authority having jurisdiction. Where total coverage is required, this should include all rooms, halls, storage areas, basements, attics, lofts, spaces above suspended ceilings, and other subdivisions and accessible spaces, and inside all closets, elevator shafts, closed stairways, dumb waiter shafts, and chutes. Inaccessible areas which contain combustible material should be made accessible and protected by detector(s).

Detectors should also be required underneath open loading docks or platforms and their covers, and for accessible under floor spaces of buildings without basements.

Exceptions to the last two paragraphs and other detailed information on automatic fire detectors is found in NFPA Standard 72E, *Automatic Fire Detectors*. Determining the exact location for automatic fire detectors is one of the most critical decisions to be made when installing any fire alarm system. Whenever possible, the type of detector to be used and the location of each detector should be determined by a qualified fire protection engineer who has made a complete survey of the premises to be protected. When this is not feasible, the recommendations of the equipment manufacturer should be followed. NFPA Standard 72E, *Automatic Fire Detectors*, gives complete information on the minimum performance, location, mounting, testing, and maintenance requirements of automatic fire detectors for the protection of occupant, building, space, structure, area, or object to be protected in accordance with the stated purpose.

Rate compensated and fixed temperature detectors having the proper set points for an area are rarely subjected to false operations. Rate-of-rise detectors should not be located where sudden temperature changes normally oc-

Copyright National Electrical Manufacturers Association
Provided by IHS under license with NEMA
No reproduction or networking permitted without license from IHS
Not for Resale

cur, such as near loading platforms, furnace doors, or school doorways.

Smoke detectors should not be located in areas where high levels of smoke are likely to occur such as airport hangars, garages, and furnace areas.

Waterflow switches should be mounted on sprinkler risers in order to sense the flow of water in a sprinkler system. The installation of waterflow switches should be in accordance with NFPA Standard 13, *Standard for the Installation of Sprinkler Systems*.

5.2.4 Audible Alarm Indicating Appliances

Audible alarm indicating appliances should be installed so as to be protected against the effects of temperature, vermin, corrosion, humidity, and physical damage. Speaker materials which are subject to moisture absorption should be suitably impregnated.

Audible alarm indicating appliances should be installed so that their sound level is at least 15 dBA above the equivalent sound level or 5 dBA above the maximum sound level to overcome ambient sound levels in all occupiable areas. The equivalent sound level is the mean square, A-weighted sound pressure measured over a 24-hour period.

Audible alarm indicating appliances should be installed on walls or ceilings in accordance with manufacturer's instructions and, where exposed to mechanical injury, should be protected by a suitable guard.

5.2.5 Visible Alarm Indicating Appliances

Visible alarm indicating appliances are available as separate devices; they are available in combination with audible alarm indicating appliances also. See Section 4 of this manual. When visible alarm indicating appliances are required, they frequently are located adjacent to audible alarm indicating appliances. In locating visible alarm indicating appliances, it is important to remember their primary purpose, which is to provide hearing-impaired occupants of a building notification of a fire emergency equivalent to that which is provided normal hearing persons by audible signaling appliances. Audible indicating appliances can be heard from around corners or on the other side of doors. To obtain the same effect visually requires more appliances, and it may be necessary to select appliances that use reflection techniques in order to achieve their useful purpose.

5.2.6 Visible Alarm Signal Annunciators

Annunciators should be mounted where they are readily accessible to responsible operating personnel. The use of an annunciator at the main entrance to a building is recommended to permit responding fire service personnel to locate the fire quickly. This is a requirement for systems designed to meet NFPA Standard 72B.

5.2.7 Permanent Recorders

Punch registers and printers normally are located adjacent to the control unit where they can be readily consulted by responsible operating personnel.

5.2.8 Trouble Signals. Should be located where they can be readily heard by responsible personnel and, unless otherwise specified, should be mounted on or near the control panel. Trouble signals should be audible and may be supplemented with a visible indicator.

Authorized Engineering Information 3-8-1985.

5.3 POWER SUPPLIES

5.3.1 Number of Sources Required

All fire alarm systems installed in accordance with NFPA Standards 72A through 72D a d 72F require three power supplies; a primary (main) power supply used to operate the system, a secondary (standby) power supply used to operate its system in the event of a failure of the primary (main) power supply, and a trouble signal power supply which is capable of sounding trouble signals in the event of interruption of the primary (main) power supply.

An exception exists for NFPA 72B, *Auxiliary Protective Signaling Systems* using shunt type master boxes and initiating devices such as sprinkler alarm switches, heat sensing fire detectors or manual fire boxes which do not require a local source of operating power to perform their function. Since the shunt master box power is supplied by the power supply of the municipal system to which it is connected, no local power supplies are required.

The trouble signal power supply is permitted to be the same as the secondary (standby) power supply.

Another exception exists for NFPA 72A, *Local Protective Signaling Systems*. No secondary (standby) power supply is required for these systems when the building power supply to which they are connected is backed up by an approved Emergency System, Legally Required Standby System, or Optional Standby System which meets the performance requirements of NFPA 70 Articles 700, 701, or 702. Refer to NFPA 72A and NFPA 70 for full details of these requirements.

Note: This exception was added to NFPA 72A in 1985 and is expected to be added to NFPA 72B,

Copyright National Electrical Manufacturers Association
Provided by IHS under license with NEMA
No reproduction or networking permitted without license from IHS
Not for Resale

NFPA 72C, and NFPA 72D when they are next revised.

Fire alarm systems suppliers frequently do not show all the details of "POWER SUPPLY" systems in their installation drawings. Most show only the power supply connections to their equipment. An exception to this general statement occurs when a particular supplier is furnishing separate power supplies such as charger, batteries, and so forth, which should be properly interconnected with other components of the fire alarm system.

This lack of complete installation detail results because reference to "power supplies" usually refers to the primary sources of power supplied to the building and not to equipment supplied as part of the fire alarm system that can also be called "power supplies."

This distinction gets somewhat murky when secondary (standby) power supplies are considered. When engine-driven generators are used for this purpose, they are frequently part of the building's system and, therefore, are not shown in detail as part of the fire alarm system. When the generator is dedicated to the fire alarm system and supplied by the same supplier, detailed installation information is usually included on the fire alarm installation drawings.

Batteries used for secondary (standby) power supplies are usually dedicated to the fire alarm system and furnished by the same supplier. Consequently the installation details of such equipment usually is supplied by the fire alarm system supplier.

5.3.2 Primary (Main) Power Supplies

The most widely used source for the primary (main) power supply is one phase of the commercial 240/120 volt ac electric light and power service available in most buildings. If necessary, a properly installed engine-driven generator or equivalent may be used instead.

While a two-wire power supply can be used to operate a system using a storage battery for the secondary (standby) power supply, most systems use two phase, three-wire supplies having a continuous unfused neutral conductor. The two individual phase conductors should be on different phases of the building power supply so that interruption of a single phase will not prevent operation of the other phase. On such power supplies, the system is operated from one phase of the building power supply and the other phase used to operate trouble signals. In this manner, trouble signals can be actuated when the phase used for system operation is interrupted.

It is important that when a three-wire power supply is used, that a separate overcurrent protection device, such as a circuit breaker, be used and connected to each phase of building power being used for the fire alarm system. When disconnecting the system operating power, the trouble signal power should not be interrupted. Gang switched breakers or disconnect switches should not be used to disconnect system operating power and trouble signal power at the same time.

Connections to the power service should be on a dedicated branch circuit. The circuit and connections should be mechanically protected. The circuit disconnecting means should be accessible only to authorized personnel and should be clearly marked FIRE ALARM CIRCUIT CONTROL.

5.3.3 Secondary (Standby) Power Supplies

Secondary (standby) power supplies should be capable of operating the connected fire alarm system in the event of failure of the primary (main) power supply for specified periods of time under maximum normal load and alarm load conditions. The specified periods of time vary depending upon the type of system and, in the case of NFPA 72D, how the system is used.

The following specified periods of time under maximum normal load and alarm load conditions required by NFPA Standards are:

		Maximum Normal Load	Alarm Loads
72A	Local Systems	24 hours	5 minutes
72B	Auxiliary Systems	60 hours	5 minutes
72C	Remote Station Systems	60 hours	5 minutes
72D	Proprietary Systems	24 hours	5 minutes
72F	Emergency Voice/Alarm Communication Systems	24 hours	2 hours

Copyright National Electrical Manufacturers Association
Provided by IHS under license with NEMA
No reproduction or networking permitted without license from IHS
Not for Resale

Maximum normal load for fire alarm systems generally includes only supervision current. The NFPA Standards require that the secondary (standby) power supply be capable of operating the system continuously for the period of 5 minutes or 2 hours under alarm load, at the end of the period of 24 or 60 hours under maximum "normal" load.

Maximum "normal" load for Proprietary Systems depends on how the system is applied. In regular fire alarm service most systems are hopefully dormant. Only supervising current and continuously energized circuits need be considered in calculating maximum "normal" loads. When, however, alarms or supervisory signals are received, lamps and peripheral equipment are frequently turned on.

Printers that might get a real fire signal once a month can get hundreds of signals an hour if guard patrols report to the system or other supervisory services are being monitored. Furthermore, what is "normal" for one installation can be below "normal" for another using the same equipment. This information should obviously be resolved between the user or specifier of the equipment and the supplier.

Emergency Voice/Alarm Communication Systems also present unique problems in calculating standby power capacity requirements. Since the function of these systems is to provide communications to people in buildings that are deemed to be impractical to totally evacuate, it is necessary to require that these systems remain functional beyond the usual five minutes of alarm. NFPA 72F requires this period to be two hours. However, the nature of the use of a voice system during an emergency condition is sporadic and the number of speaker circuits selected varies. Therefore, NFPA 72F permits 15 minutes of operation at maximum connected load to be considered the equivalent of two hours of normal use.

Secondary (standby) power supplies are used in two basic forms. In one form the secondary power supply is not directly connected to the system but is switched in when primary operating power fails. The switching can take place either in a building system switchover point or at the fire alarm system control unit. In the other form the primary (main) source of power is of an uninterruptable nature such as might be supplied from an uninterruptable power source (UPS) or a float charged battery where the battery is floated across the primary (main) power supply to the fire alarm system control unit.

In either case, the trouble signal is required to indicate loss of the primary (main) power supply. The only exception permitted by the NFPA Standards to sounding the trouble signal upon loss of primary (main) power is when the fire alarm systems get their primary (main) power by connection to a building power supply which is backed up by one of the emergency or standby systems described in 5.3.1. In this case, the loss of power is usually evident and the fire alarm system cannot monitor the loss of building power without further connections to the building system.

5.3.4 Trouble Signal Power Supply

The trouble signal power supply is rarely a true independent source of power except on systems which do not use a secondary (standby) power supply. In such systems the phase of the building power used for the trouble signal power supply should be different from the phase used for the primary (main) power supply for the fire alarm system.

Where a secondary (standby) power supply is used, it may also be used as the source of power for the trouble signals.

5.3.5 Batteries

5.3.5.1 STORAGE BATTERIES should be located or enclosed such that the equipment of the fire alarm system, including overcurrent protective devices, should not be affected adversely by battery gases. The cells should be insulated suitably against grounds and shorts and should be mounted in such a manner as not to be subject to mechanical damage. Racks and frames should be protected suitably against deterioration.

Storage batteries should be trickle-charged or float-charged from a reliable power source to keep them fully charged under all conditions of normal operation. They should be protected from damage caused by an excessive rate of charge or from the reversal or interruption of the supply current. Provisions should be made to prevent spraying of the battery electrolyte while it is being charged at the maximum rate.

When lead-acid batteries are used, transparent battery cases will facilitate inspection for excessive sedimentation.

Storage batteries should be protected by overcurrent devices having a rating of not less than 150 percent and not more than 200 percent of the maximum operating load applied to the battery.

Copyright National Electrical Manufacturers Association
Provided by IHS under license with NEMA
No reproduction or networking permitted without license from IHS
Not for Resale

5.3.5.2 PRIMARY (DRY CELL) BATTERIES

Primary (dry cell) batteries should not be used.

Authorized Engineering Information 3-8-1985.

5.4 REQUIREMENTS FOR INSTALLATION OF WIRING AND EQUIPMENT

Refer to Article 760 of the *National Electrical Code* (NFPA 70) for requirements for installation of fire alarm wiring and equipment.

Authorized Engineering Information 3-8-1985.

5.5 MANUFACTURER'S INSTRUCTIONS

Installation wiring also should be in accordance with the procedures and recommendations of the fire alarm system manufacturer. Typically, the manufacturer's instructions may recommend the use of twisted wire, coaxial cable, microphone cable, shielded cable, or a special multiconductor cable.

Authorized Engineering Information 3-8-1985.

5.6 LOCAL CODES

All fire alarm systems should be installed in accordance with local fire alarm or electrical codes, or both. Most local authorities have adopted the *National Electrical Code* (NFPA 70) as their local electrical code. Some localities have added requirements to the *National Electric Code*, or have completely written their own code. In any event, it is very important to check with the local electrical or fire inspector, or both, to determine what the code requirements are for installing fire alarm systems.

Authorized Engineering Information 3-8-1985.

5.7 TYPES OF CIRCUITS

The majority of fire alarm systems are powered by 120V, 60hz. This voltage is transformed down to, typically, 12 or 24 volts dc. In terms of the power and the type of wire that may be used, fire alarm circuits are broken into two types: nonpower-limited and power-limited. These circuits are defined in detail in the *National Electrical Code*, Article 760.

Caution: Low voltage systems, as mentioned above, are generally derived through the transformation of 120 volt sources. This higher voltage is present in most control units. In addition, fan control circuits and circuits to control other equipment may be present in the control panel. These circuits are frequently 120 volts or more depending upon application.

Authorized Engineering Information 3-8-1985.

5.8 INTERMIXING OF CIRCUITS

Nonpower-limited fire alarm circuits may be run in the same enclosure, cable, or raceway with Class 1 circuits (defined in Part B of Article 725 of the *National Electrical Code*, NFPA 70), provided all conductors are insulated for the maximum voltage of any conductor in the enclosure or raceway. Power supply and fire alarm circuit conductors are permitted in the same enclosure, cable or raceway only when connected to the same equipment. See Part B of Article 760 of the *National Electrical Code*, NFPA 70, for the full requirements for the selection and installation of conductors in nonpower-limited fire alarm circuits.

Power-limited fire alarm circuits should be separated by at least 2 inches, a partition, or other acceptable equivalent means, from electric light, power, Class 1, or nonpower-limited fire alarm circuit conductors in the same enclosure, raceway, cable, compartment, outlet box, or shaft. Insulating all conductors for the maximum voltage of any conductor in the enclosure, raceway, and so forth, is *NOT* an acceptable equivalent means.

Power-limited fire alarm circuits may be run in the same enclosure, cable, or raceway with Class 3 circuits, and with Class 2 circuits provided that the insulation of the Class 2 circuit conductors is at least equal to what is required for the power-limited circuit conductors. (Class 2 and Class 3 circuits are defined in Part C of Article 725 of the *National Electrical Code*, NFPA 70.)

A circuit that could be installed as a power-limited circuit may be run with non-power-limited and Class 1 circuits under the following conditions. First the circuit no longer would be marked as a power-limited circuit. Second the circuit conductors should be insulated for the highest voltage requirements throughout. This means that if a power-limited circuit has been changed, for wiring purposes, to a nonpower-limited circuit, it should be installed as a non-power-limited circuit from end to end.

See Part C of Article 760 of the *National Electrical Code*, NFPA 70, for the requirements for the selection and installation of conductors in power-limited fire alarm circuits.

Authorized Engineering Information 3-8-1985.

Copyright National Electrical Manufacturers Association
Provided by IHS under license with NEMA
No reproduction or networking permitted without license from IHS
Not for Resale

5.9 ENCLOSED (IN METALLIC) VS. EXPOSED WIRING

Most nonpower-limited fire alarm wiring is installed in raceways or cable trays. However, the *National Electrical Code* and many local codes permit power-limited wiring to be either run in raceways or run exposed on surface of ceiling and sidewalls or "fished" in concealed spaces. When wires are run exposed, they should be adequately supported and protected from mechanical damage. When mounted less than seven feet from the floor, cable should be securely fastened using insulated stapling (or equipment) at 18 inch (457 mm) intervals. When wiring is run exposed, conductors and cables listed for this purpose should be used.

Authorized Engineering Information 3-8-1985.

5.10 WIRING IN PLENUMS

When wiring is installed in ducts, plenums, and other space used for environmental air, the wiring should be in metallic tubing, metal conduit, or acceptable equivalent. However, there is one exception to this requirement. For power-limited circuits, any single and multi-conductor cables listed as having adequate fire resistant and low smoke producing characteristics *may* be installed in these areas. Check with the local authority having jurisdiction and see Section 760-4d of the *National Electrical Code*, NFPA 70.

Authorized Engineering Information 3-8-1985.

5.11 IDENTIFICATION OF CIRCUITS

Connections to the electric light and power service for supplying primary (main) power to the fire alarm system is required by NFPA Standards to be on a DEDICATED BRANCH CIRCUIT. The circuit and connections should be mechanically protected. The circuit disconnecting means should be accessible only to authorized personnel and should be clearly marked "FIRE ALARM CIRCUIT CONTROL."

Where fire alarm circuits are intermixed with other circuits in terminal boxes, the fire alarm circuits should be identified.

Attach a tag marked "FIRE ALARM CIRCUIT" to the fire alarm circuit wires. This will prevent any tampering with the circuits, and also provide identification of the circuits for maintenance and testing.

Authorized Engineering Information 3-8-1985.

5.12 SUPERVISION

Most fire alarm circuits are supervised, the exception being certain supplementary device circuits. Manufacturer's instructions should be followed when installing to insure proper supervision operation. Supervision means that a fault in the installation wiring will result in a trouble signal at the control unit. A fault condition may be either a single break, opening in the wiring, or a ground fault that prevents normal operation of the system.

Supervision is accomplished usually by passing a small amount of current through the system's interconnecting wiring. The interconnecting wiring is generally a pair of wires from the control unit to the detection devices and indicating appliances. To insure that supervision is maintained to all devices, "tee" tapping off these circuits is not permitted. Certain multiplex systems, however, do allow "tee" taps. Manufacturer's recommendations will provide adequate instructions in this regard.

Authorized Engineering Information 3-8-1985.

5.13 LIGHTNING PROTECTION

Lightning protection, when required, should be installed where the outside wiring enters the building. A ground wire should be run from the lightning protector to a good earth ground. Lightning protection is especially important for circuits that go outside the building, either aerially or underground. Circuits that are on the top floors of buildings should be considered for lightning protection, with lightning protectors being mounted on or near the floor that is being protected. Under no circumstances, should separate lightning protection be mounted inside a control unit. Transients should be bypassed to ground at the farthest possible distance from the control unit, and before the lightning-susceptible wires intermix with other circuits.

Authorized Engineering Information 3-8-1985.

5.14 OUTSIDE WIRING[6]

Fire alarm wiring that runs outside of a building is typically run overhead on poles or buried. Wires run overhead should use a messenger, or support, and be constructed to withstand the strain of wind, ice, and its own weight. Wires that are buried should have a weather-proof casing such as polyethylene and also have a rodent barrier. See Article 800 of the *National Electrical Code*, NFPA 70.

Authorized Engineering Information 3-8-1985.

Copyright National Electrical Manufacturers Association
Provided by IHS under license with NEMA
No reproduction or networking permitted without license from IHS
Not for Resale

Section 6

SYSTEM START-UP PROCEDURE

6.1 GENERAL

After the installation of the fire alarm system has been completed, the system should be checked out to ensure that it is operating properly. It is customary for manufacturers to include their recommended checkout instructions for the system with the control panel. When these instructions are provided, the system should be checked out in accordance with the provided information. When such instructions are not supplied, the following procedures will serve as a guide. Because of the variations in system design among manufacturers and the large number of options that are offered, it will be necessary to select the tests that apply to the system being checked out. The following tests are based on the assumption that the fire alarm equipment is designed to meet NFPA Fire codes and is UL listed or FM approved, or both.

Authorized Engineering Information 3-8-1985.

6.2 CHECK OF INSTALLATION WIRING

6.2.1 Preliminary

Prior to connecting the installation wiring to the installation wiring terminals provided on the control panel, the wiring should be checked for extraneous voltages and shorts, opens, and grounds. All faults should be located and eliminated before the installation wires are connected to the control panel. The other end of these wires should be connected to the remote devices (alarm initiating, alarm indicating, annunciators, and so forth) in the normal manner. An insulation tester is used to check for grounds except where the manufacturer's instructions warn against using such a device while certain devices are connected into the circuit. Because of the predominant use of solid state components in today's fire alarm systems, a large proportion of system devices may have to be disconnected in order to use insulation testers. Consider using a volt-ohmmeter as a primary circuit tester.

When a smoke detector is of the plug-in type, the installation wiring is terminated at the detector base but the detector itself is not plugged in until after the installation wiring tests have been completed. Since the circuits between the base terminals are usually completed within the detector, it is necessary to short certain terminals with jumpers to perform the installation wiring tests. These jumpers are usually installed on the base by the manufacturer or are described in the installation instructions. The jumpers should be removed after the installation wiring tests have been completed and prior to plugging in such detectors.

When the smoke detector is not of the plug-in type, the detector wires should be connected to the circuit for the test.

6.2.2 Test for Extraneous Voltages

Each installation wire should be tested at the control panel for extraneous (stray) voltages, using a volt meter. Check each installation wire for stray voltage to ground and to associated wires. Some "noise" may be measured during this test because of the antenna effect of unloaded wires. This type of voltage will typically not affect circuit operation and will disappear when the installation wires are connected to the control unit. This test should be conducted with the required end-of-line device installed.

6.2.3 Tests for Shorts and Opens

Each installation wire should be tested at the control panel end for open circuits and short circuits to all other installation wires, using an ohmmeter. The normal expected resistance between each pair of wires can usually be determined from the installation wiring diagram and Table 6-1.

Table 6-1
RESISTANCE OF CONDUCTORS

Size AWG	dc Resistance per 1000 feet (ohms)
22	16.7
20	10.6
19	8.3
18	6.5
16	4.1
14	2.6
12	1.6
10	1.0
8	0.65

6.2.3.1 ALARM INITIATING CIRCUITS

For Class B alarm initiating circuits, the normal resistance between wires depends on the location of the end-of-line device. When the device is located off the panel as shown in Figure 6-1, the resistance measured between

Copyright National Electrical Manufacturers Association
Provided by IHS under license with NEMA
No reproduction or networking permitted without license from IHS
Not for Resale

wires 1 and 2 at the control panel should be equal in value to the end-of-line device. When end-of-line device is located on the panel as shown in Figure 6-2, the ohmmeter should measure infinite resistance between wires 1 and 2 since wires 3 and 4 are not connected to the end-of-line device during this test. The resistance between wires 1 and 4, 2 and 3, and 3 and 4 should also be infinite. The resistance between 1 and 3 and between wires 2 and 4 should be close to zero. The actual reading should be equal to the ohmic resistance of the copper in the wire run. To make sure that wires 1 and 3 and wires 2 and 4 are not connected in more than one place, it is recommended practice to temporarily open the circuit at the last initiating device in each circuit. While the circuits are open, the ohmmeter should read infinity between wires 1 and 3 and wires 2 and 4.

For Class A alarm initiating circuits, the normal resistance between wires will depend on the circuitry used to provide the Class A operation.

6.2.3.2 Alarm Indicating Circuits

Polarized alarm indicating appliances are connected in parallel as shown in Figure 6-3. However, these circuits are terminated by an end-of-line device to permit supervision of the installation wires. The resistance between wires 1 and 2 should be measured with the positive terminal of the ohmmeter connected to wire 1 so that meter current will flow only through the end-of-line device and not through any of the appliances. The meter reading should be equal to the resistance of the end-of-line device. Sometimes the last appliance in the circuit is installed so as to serve as the end-of-line device. In this case, the ohmmeter should read the resistance of the appliance.

Speaker-type alarm indicating appliances are also connected in parallel, as shown in Figure 6-4, and terminated by an end-of-line device to permit supervision of the installation wires.

The meter reading should be equal in value to the end-of-line device. Sometimes the last speaker on the circuit is installed to serve as the end-of-line device. In this case, the ohmmeter should read the resistance of the speaker. The capacitor blocks direct current flow through the transformer.

6.2.3.3 Annunciators

As shown in Figure 6-5, the resistance reading for annunciator installation wires should be equal to the resistance of the annunciating device(s) between the two wires.

6.2.4 Test for Grounds

All installation wires should be checked for grounds with an ohmmeter. If installation wires must be tested for grounds with an insulation tester, special attention should be given to the warning in 6.2.1 before any tests are made. All installation wires should test free of grounds, except for the grounded leg of the main power supply, unless otherwise indicated in the manufacturer's instructions.

6.2.5 Visual Inspection

Prior to turning on the power, the system should be inspected to ensure that it complies with all of the installation instructions. All installation wires should be properly terminated and dressed. In systems using balancing resistors in the alarm indicating circuits, the installation wires should not be run near or above the resistor(s); otherwise, the wire insulation may overheat. Spare (unused) circuits should be terminated in accordance with the manufacturer's instructions. All plug-in components should be fully seated. All switches should be in their normal position. All connections should be tight. The panel should be clean so that particles of dust or dirt cannot interfere with proper operation.

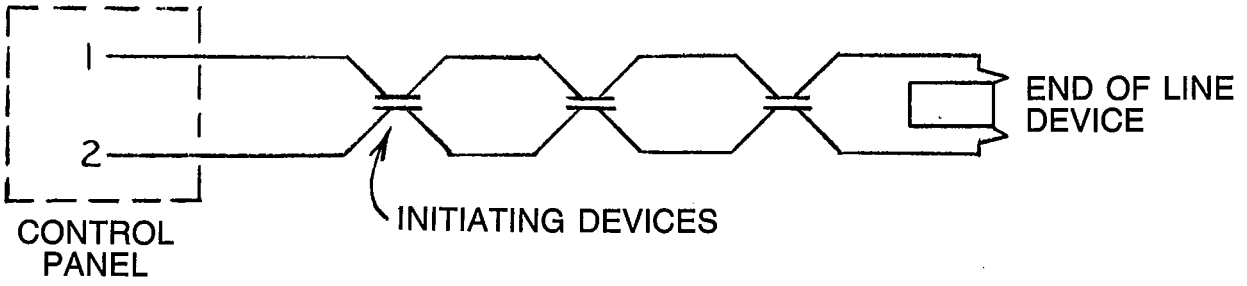

Figure 6-1
REMOTE END OF LINE DEVICE ON 2-WIRE CLASS B ALARM INITIATING CIRCUIT

Copyright National Electrical Manufacturers Association
Provided by IHS under license with NEMA
No reproduction or networking permitted without license from IHS
Not for Resale

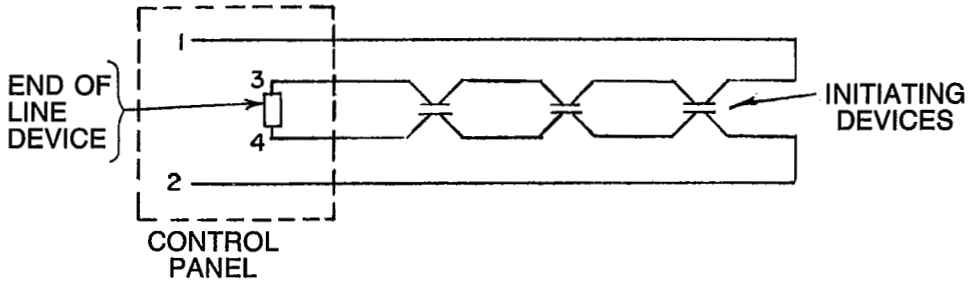

Figure 6-2
END OF LINE DEVICE ON CONTROL PANEL ON 4-WIRE CLASS B ALARM INITIATING CIRCUIT

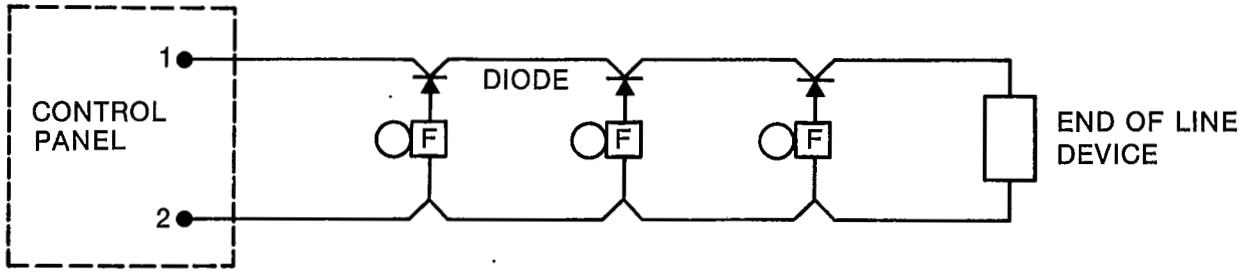

Figure 6-3
POLARIZED DIODE TYPE ALARM INDICATING APPLIANCES CONNECTED IN PARALLEL

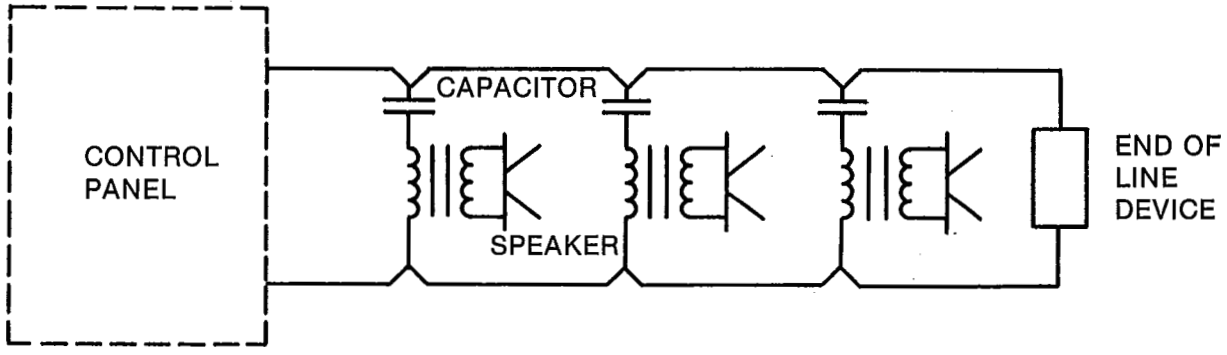

Figure 6-4
SPEAKER-TYPE ALARM INDICATING APPLIANCES

Copyright National Electrical Manufacturers Association
Provided by IHS under license with NEMA
No reproduction or networking permitted without license from IHS
Not for Resale

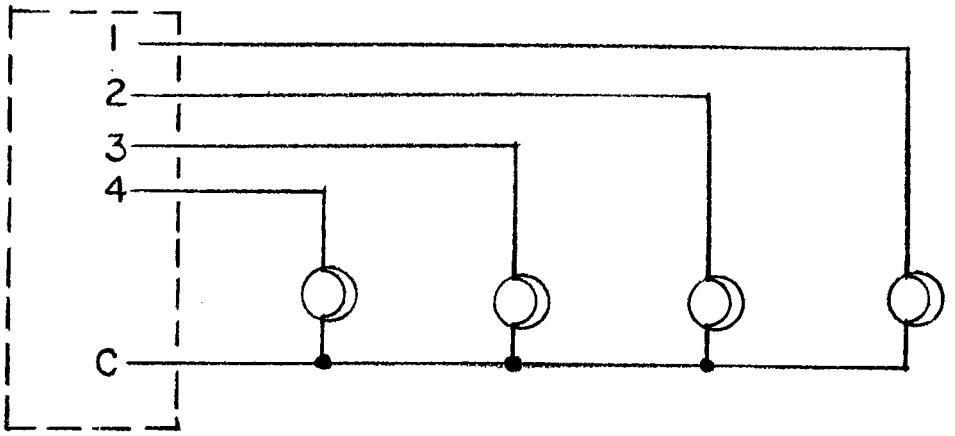

Figure 6-5
ANNUNCIATOR CIRCUIT

6.2.6 Check of Power Source(s)

The system and trouble power supply terminals should be connected to a source or sources of power as indicated in the system wiring diagram(s).

6.2.6.1 Alternating Current Systems

For alternating current systems, the primary power supply will usually be a 208/120- or 120/240-volt, 60 Hertz, three-wire supply having a continuous, unfused, grounded neutral conductor, with one side or phase of the circuit used for the primary (main) system operating power supply and the other for the trouble signal power supply.

6.2.6.2 Low-Voltage Direct Current Systems

Low-voltage, direct current systems usually operate on 12 or 24 volts direct current obtained by rectification of transformer-reduced 120 volts, 60 Hertz power. For these systems, the transformer may be mounted within the cabinet as an integral part of the control panel, or externally.

Low-voltage, direct current systems also should have separate trouble supplies. If transformer-reduced alternating current is used for the trouble signal supply, it should be from a source separate from the primary (main) system power supply, such as the other leg of a three-wire supply. A battery supplied for secondary (standby) power may be used for a trouble signal power source.

Most low-voltage, direct current systems are designed to operate in a normal manner from a battery during periods of failure of the primary (main) system power supply. When rechargeable batteries are used, the system should include a battery charger which automatically maintains the battery fully charged under all conditions of normal operation. If the battery charger also is used to power the system, it should have sufficient capacity to power the system and charge the battery under maximum load conditions.

The installation wiring between all direct current power supplies and the control panel should be checked for correct polarity.

The battery charger should be adjusted for proper charging current in accordance with the manufacturer's instructions. The battery should be tested and brought up to full charge prior to turning the system over to the owner of the building.

Authorized Engineering Information 3-8-1985.

6.3 NORMAL OPERATION (SUPERVISORY CONDITION)

After the visual inspection has been completed and all faults corrected, the control panel can be energized to obtain the normal supervisory condition. In this condition, all supervised circuits should be energized, all alarm signals and trouble signals should be silent, and all lamps should be in their normal condition.

For systems which have a ring-back trouble circuit, operation of the system trouble silencing switch to its off-normal position should result in the sounding of the trouble signal. When no trouble exists in the system, putting the silencing switch in the off-normal position sets up the ring-back condition, indicating that the switch should be returned to normal. With the switch in the off-normal position, the condition of the trouble lamp will depend on the sequence used in the particular system. Two sequences are possible as shown in Table 6-2:

Copyright National Electrical Manufacturers Association
Provided by IHS under license with NEMA
No reproduction or networking permitted without license from IHS
Not for Resale

Table 6-2

Condition	Sequence 1 Lamp	Sequence 1 Audible Trouble Signal	Sequence 2 Lamp	Sequence 2 Audible Trouble Signal
Normal	off	off	off	off
Trouble	off	on	on	on
Silence	on	off	on	off
Ring Back	on	on	off	on

In the ring-back condition, the lamp will be on for systems using sequence 1 and will be off for systems using sequence 2. For both sequences, returning the switch to its normal position should result in both the audible signal and the lamp being off.

For systems using a momentary reset switch to silence the audible signal, operation of the switch during the normal supervisory condition should have no effect on the system.

For systems which do not provide for a ring-back type of trouble circuit, operation of the system trouble silencing switch to its off-normal position should cause the trouble lamp to light. Returning the switch to its normal position should turn the light off again. *Note:* This type of operation does not meet the requirements of NFPA 72A.

Authorized Engineering Information 3-8-1985.

6.4 SUPERVISION OF CIRCUITS

6.4.1 General

With the power turned on and the system operating in the normal supervisory condition, all of the supervised circuits should be tested separately for proper operation, first by introducing a single break and then a single ground fault in each circuit extending from the control panel. In addition a short should be introduced on each indicating appliance circuit. These fault conditions should be introduced in a manner such that no more than a single fault exists at any one time.

Caution: In many systems, a ground on the line side of the alarm initiating circuit will cause rupturing of the related supply fuse. For this reason, a ground fault should be simulated by using a 120-volt, 100-watt lamp from the conductor being tested to ground. Full-voltage, alternating current systems are grounded systems and should provide a trouble signal for both the open and ground-fault conditions. Low-voltage, direct current systems are usually ungrounded systems and will provide a trouble signal only on open faults unless such systems are equipped with ground detection circuits.

When the trouble signal sounds, operation of the silencing switch to the off-normal position should silence the audible trouble signal. The related trouble lamp should be on. When the system is restored to the normal standby condition, operation of the trouble circuit will depend on the sequence used in the system. When the silencing switch is returned to its normal position, the audible trouble signal should be silent and the trouble lamp off.

After each test of a supervised circuit, the system should be restored to normal before proceeding to the next test.

6.4.2 Power Supply Circuits

Interrupting the ungrounded lead of the primary (main) system power supply should cause the audible trouble signal(s) to sound. If the control unit involves more than one cabinet, interruption of the supply to any enclosure should also result in a trouble signal. On all alternating current systems and on direct current systems without secondary power supplies, interrupting the primary (main) power supply will leave the system inoperative. On direct current systems equipped with a secondary (standby) battery power supply, interrupting the primary (main) power supply should cause the system to transfer to the battery supply.

Restoring the power should restore normal operation of the system automatically.

Interrupting the trouble circuit supply will not result in a trouble signal unless the system has double supervision. If double supervision is provided, the systems should sound a trouble signal when the trouble signal power supply is interrupted. This trouble signal usually has its own signal silencing switch and lamp.

6.4.3 Alarm Initiating and Indicating Circuits

An open in any alarm initiating circuit, or either an open or short on any alarm indicating circuit, should result in a trouble signal. Restoring the circuit should silence the trouble signal automatically if trouble signal latch-in is not provided. Otherwise, operation of the system reset will be required. A single ground fault on any alarm initiating circuit or on any alarm indicating circuit on an ungrounded conductor in a grounded system should also result in a trouble signal. Removal of the ground fault should restore the system to the normal supervisory condition.

On ungrounded systems without a ground detection circuit, a single ground will have no effect on the system and will not result in a trouble signal. However, multiple grounds can cause false alarms or prevent operation, and it is important to make sure during the initial system checkout that the system is free from grounds.

On ungrounded systems with a ground detection cir-

Copyright National Electrical Manufacturers Association
Provided by IHS under license with NEMA
No reproduction or networking permitted without license from IHS
Not for Resale

cuit, a ground on any supervised circuit should sound a trouble signal.

6.4.4 Fuses

Except for unsupervised circuits (circuits in which no supervisory currents flow), removal of any fuse should sound a trouble signal. Restoration of the fuse should silence the trouble signal and restore the system to the normal supervisory condition. Verify that fuses match marked ratings on equipment or drawings.

6.4.5 Municipal Circuits

Systems connected to a municipal communications center or directly to fire headquarters should not be tested without first informing the local fire authorities that the system is being tested.

Opening the circuit to a shunt-type municipal fire alarm box will cause an alarm on the municipal fire alarm system. The wires to a shunt-type box should never be grounded since this would cause a ground fault on the municipal system.

Opening the circuit to a local-energy type municipal fire alarm box should sound a trouble signal on the local system and have no effect on the municipal system. Grounding the circuit should produce the same results except that no trouble signal will sound for ungrounded systems without ground detection.

Opening the circuit to the municipal communications center or the fire headquarters in a remote station system should sound a trouble signal at the designated location(s). A single ground on the circuit will sound a trouble signal only if the system includes a ground detection circuit.

6.4.6 Supplementary Circuits

Supplementary circuits usually are not supervised and, therefore, are not connected to the trouble circuit. Unsupervised supplementary circuits should be designed so that a fault on these circuits will not interfere with the operation of the balance of the system.

6.4.7 Annunciator Circuits

Unsupervised annunciators are only permitted when they are located on the control panel, are not the primary annunciator, or have been classified as supplementary. Supervised annuniciators should be tested in the same manner as supervised alarm indicating circuits.

Authorized Engineering Information 3-8-1985.

6.5 ALARM OPERATION

All manual alarm initiating devices should be operated individually to test for proper operation of the system during the alarm condition. All automatic alarm initiating devices, including heat, smoke, and water-flow devices, should be tested in accordance with the manufacturer's instructions.

The operation of any alarm initiating device should result in a fire alarm signal.

On *noncoded systems*, the alarm indicating appliances should sound continuously until the circuit is restored manually or the time limit cutout, if provided, operates.

On *coded systems*, the code after each initiation should sound for a minimum of three rounds.

On *presignal system*, the presignal alarm should sound on only the presignal alarm indicating appliances.

The general alarm of a *presignal system* should sound on all the alarm indicating appliances. This should be verified by listening to each appliance during any one of the alarm initiating device tests.

For both *coded* and *zone-coded* systems, a test should be made to ensure that each initiating device sounds its correct code.

The connection to auxiliary and remote station protective signaling systems should be tested at least once with the approval of the appropriate fire authorities.

On annunciated systems, the annunciator should be checked as each initiating device is tested to make sure that the proper point is annunciated.

If supplementary circuits are provided, they should also be checked for proper operation during the testing of at least one of the alarm initiating devices.

Authorized Engineering Information 3-8-1985.

Copyright National Electrical Manufacturers Association
Provided by IHS under license with NEMA
No reproduction or networking permitted without license from IHS
Not for Resale

Section 7

PROPER MAINTENANCE OF FIRE ALARM SYSTEMS

7.1 PERIODIC MAINTENANCE

7.1.1 General

When performing periodic maintenance on the modern fire alarm system, it will be helpful to have the following available:

- The manufacturers installation and user instructions for the system control panel, smoke or flame detectors and other specialized components.
- The "as built" drawings of the system which should include location of all devices, wiring methods, and sequence connections between devices and control equipment.
- The appropriate National Fire Protection Association (NFPA) Standard if maintenance is being performed pursuant to a specific standard. NFPA standards specify frequency of testing for many devices and systems. NFPA Standard 72H entitled, *Guide for Testing Procedures for Protective Signaling Systems* is specifically recommended.
- Any record(s) of tests previously performed as well as the record from tests at system start up to allow a comparison of the electrical measurements being taken with those recently observed. Such comparisons can be a valuable aid for rapid trouble shooting. Additionally, future faults may be prevented by finding the source of a difference in an initiating device circuit resistance, voltage, or current at control unit terminals, and resistance to ground.

7.1.2 System Performance and Integrity

One way to provide a thorough test of system performance and integrity is to repeat the tests outlined in the start-up procedures published by the equipment manufacturer. If not available, Section 6 can be used as a guide.

Authorized Engineering Information 3-8-1985.

7.2 CONTROL UNITS

7.2.1 Printed Circuit Board Assemblies of Modules

Most modern control units do not require periodic adjustment or field repair other than replacement of a module, printed circuit board assembly, or adjustment of battery charging voltage. Defective printed circuit board assemblies or modules can best be serviced at the manufacturer's plant or at their authorized service facility.

When the control panel uses printed circuit boards, care should be taken to clean off excessive dust. The boards should be maintained clean and dry to ensure proper operation.

7.2.2 Relay Maintenance

The maintenance and adjustment of relays should be performed only at the manufacturer's plant or authorized service facility, or by an organization (or person) having the necessary technical experience, components, and equipment. A complete stock of spare relays should, therefore, be kept on hand so that an out-of-adjustment relay, or one with burned out, pitted contacts can be readily replaced.

Covered relays seal out dust and discourage improper adjustment by a novice.

7.2.3 Battery Charger Maintenance

Low battery voltage is generally an indication that the battery charger or battery needs maintenance. Float-charged and trickle-charged batteries are normally kept in a fully charged condition at all times except when the battery provides power for the fire alarm system during alternating current power failures.

7.2.4 Incandescent Lamp Maintenance (Trouble lamps or lamps in Annunciators)

The life of lamps will be extended when they are illuminated only occasionally and then only for a brief period of time. Lamp life can be shortened if subjected to vibration from nearby equipment.

When lamps are used to illuminate a colored bulls-eye lens or a translucent back-lighted panel, the life of the lamp can be extended by using one with a voltage rating higher than the circuit voltage and still provide sufficient illumination for the purpose, e.g., 28- or 32-volt lamps used on 24-volt circuits, or 145-volt lamps used on 115- or 120-volt circuits. Where lamps are subject to vibration, 6- and 12-volt lamps ususally outlast 24-, 32-, and 48-volt lamps because, generally, the filaments are larger in diameter and shorter in length in the lower voltage lamps.

Copyright National Electrical Manufacturers Association
Provided by IHS under license with NEMA
No reproduction or networking permitted without license from IHS
Not for Resale

7.2.5 Fuses

Fuse maintenance consists of checking the fuse holders to make sure that good contact is made with the connectors on each end of the fuse and that they are not corroded. Hot fuses usually indicate either poor contact or overloaded fuses, or both. A supply of fuses of each ampere size and type should be on hand so that the equipment will not remain out of service due to a blown fuse. Fuses which exceed the ratings of those for the circuit should not be used even temporarily.

7.2.6 Circuit Breakers

Magnetic- and thermal-type circuit breakers require very little maintenance. However, they should be kept free of dust.

7.2.7 Condition of Control Unit Cabinets (Dust and Dirt Removal)

The top and bottom of the control unit cabinet and the face of the panel in which the equipment is mounted should be kept free of dust, dirt, and grime. These can cause trouble on relays or other open-contact mechanisms or be a source of corrosion of metal parts.

Neat arrangement of connecting wires from conduits, raceways, or cables at terminating points will reduce maintenance time when it is necessary to trace and disconnect a wire in the control unit from its panel terminal for isolation and test.

Authorized Engineering Information 3-8-1985.

7.3 BATTERY MAINTENANCE

Batteries should be located in a vented clean dry place, preferably on shelves or racks above the floor level, or in cabinets.

The electrolyte level of unsealed storage batteries should be checked regularly. If the electrolyte level is low, distilled water should be added to bring the level up to normal. Most tap water has sufficient metal salts or chemical to appreciably reduce battery life. Therefore, tap water should not be used instead of distilled water in the regular maintenance of the electrolyte level.

In lead-acid batteries, the colored ball floats should be checked regularly. These floats are commonly used in transparent glass or plastic battery cases to indicate the charge condition of the battery. If all balls are floating to the top of the cell, the battery is in a fully, or very nearly fully, charged condition. When all balls are "down," the battery is in a discharge, or very nearly discharged, condition. Usually there are three colored balls in the pilot cell in a chamber wide and deep enough to float one ball above the other. Usually the red ball is on top.

The top particularly, and the sides of the cells should be kept clean and dry. The terminals between cells should be free of corrosion. The terminals should be covered with an inert acid lubricant such as white petroleum jelly, to retard future corrosion.

The instruction booklet furnished with the battery should be followed carefully and, where recommended, an equalizing charge should be given at the periods recommended. Even though the battery is equipped with ball floats, a specific gravity reading and a voltage reading should be taken at least once or twice a year, or as often as recommended in the battery instruction booklet. A lead-acid battery under a float charge should read about 2.5 volts per cell.

Authorized Engineering Information 3-8-1985.

7.4 NONCODED MANUAL BOXES

Maintenance on noncoded manual fire alarm boxes, with or without the presignal feature, should include periodic operation tests, replacement of broken "breakglass" windows or breakable elements, and checking terminal connections for loose or corroded connections. In supervised fire alarm systems, a broken connection should sound a trouble signal.

A supply of glass rods, plates, and so forth, should be kept on hand for breakglass boxes.

Authorized Engineering Information 3-8-1985.

7.5 CODED MANUAL BOXES

7.5.1 General

All coded boxes should be operated at regular intervals and a log kept showing the location of the station and the date when it was last checked. Both presignal and general alarm features should be checked. The general alarm feature is usually initiated by the operation of a key-actuated switch mounted on the box.

Since code wheels can come loose on their shafts, they should be checked about every five years.

When coded boxes are equipped with contacts for annunciation, it may be necessary to manually restore the contacts to their normal position after each alarm by means of a key or tool reset or by replacing the breakglass.

Some selective coded manual boxes are equipped with

Copyright National Electrical Manufacturers Association
Provided by IHS under license with NEMA
No reproduction or networking permitted without license from IHS
Not for Resale

test switches which can be used during regular maintenance. Insertion of the key, plug or special tool in the test key hole or slot and turning it in one direction will sound one tap on single-stroke bells or one blast on vibrating bells or horns; turning in the opposite direction and holding it in that position will permit operation of the station mechanism without sounding an alarm.

7.5.2 Spring-Driven Types

Maintenance of spring-driven coded manual boxes closely follows that for noncoded manual boxes. When this type of selective-coded manual box is operated, a pull handle usually winds a clock spring; when the handle is released, the spring unwinds and drives a gear train and a code wheel. The rotary motion of the code wheel makes or breaks a pair of contacts which transmit coded pulses to the control unit. The spring-actuated code mechanism is usually completely enclosed in a semi-dust-proof enclosure made of a transparent material.

In some boxes, pulling the station lever breaks a glass rod and/or immediately closes or opens one or two sets of contacts, in addition to winding the clock spring. The contacts either operate an annunciator or prevent alarm transmission from stations electrically further away from the control unit by opening or shorting the line beyond. Care should be taken to assure that these contacts function as intended.

Some boxes are wound with a key similar to a clock key. In these boxes the pull-lever mechanism only starts the code-sending mechanism or auxiliary shunt or annunciator contacts, or both. As with the types in which pulling an operating lever winds a clock spring, these prewound stations cause the code wheel to make at least three complete revolutions and sound the associated alarm signals three times.

Fully rewinding of spring-driven boxes after each operation should be a regular part of the maintenance programs.

7.5.3 Motor-Driven Coded Boxes

The maintenance of motor-driven coded boxes is similar to that for the spring-driven type.

Authorized Engineering Information 3-8-1985.

7.6 AUTOMATIC TRANSMITTERS

The maintenance problems encountered with automatically tripped transmitters are similar to those for manual coded boxes, because their construction and method of operation are similar. The automatic transmitter, however, has a remotely-controlled initiating circuit.

Prewound transmitters have either a separate pair of tripping magnets or use a relay which supervises the remote tripping wiring and generally has a built-in mechanical linkage to trip the spring-wound mechanism. When the trip coil is separate from the supervisory relay, the latter usually is mounted separately in the control unit.

Except on a direct current system, motor-driven transmitters usually are driven by a small alternating current, synchronous hysteresis motor.

Transmitters which can be tripped either manually or electrically should be tested both ways at least once every year. See the maintenance instructions for noncoded and coded boxes.

Like some manual boxes, prewound transmitters require rewinding after operation. This should be a regular part of the maintenance program. Some transmitters are equipped with a local trouble buzzer, a light and silencing switch; some have trouble contacts for connection to the main control unit; some have a combination of both. When these transmitters are checked periodically, the trouble signal features should be tested to make sure they are functioning properly.

Authorized Engineering Information 3-8-1985.

7.7 AUTOMATIC HEAT DETECTORS

7.7.1 Fixed-Temperature Detectors

Fixed-temperature-type automatic heat detectors which use fusible elements require little maintenance. This is true for most types of spot heat detectors. Loose or corroded terminal connections are, however, possible. Automatic heat detectors should not be painted.

After fifteen years, each 5th year remove at least two nonrestorable detectors out of every hundred and return them to a testing laboratory for tests similar to those prescribed and regularly performed at the facilities of Underwriters Laboratories Inc. and Factory Mutual. After low-melting-temperature detectors are tested, they should be discarded and replaced with new detectors. Since the test occurs after an initial fifteen-year no-test period and only two percent of the installed detectors are tested every fifth year after that, this is an economical way to establish the reliability of installed detectors. If a failure occurs on one of the tested detectors, additional detectors should be removed and tested until there is proven to exist either

Copyright National Electrical Manufacturers Association
Provided by IHS under license with NEMA
No reproduction or networking permitted without license from IHS
Not for Resale

a general problem involving faulty detectors or a localized problem involving only one or two bad detectors. A record of the location of all the tested detectors should be kept.

Fixed-temperature detectors of the restorable bimetallic type (slow make or snap action) can be tested while installed on the ceiling and connected to the control unit. A heat lamp (or hair dryer) held within an inch of the detector should cause it to operate. When the lamp is moved away from the detector, the bimetal will cool and the detector contacts will reopen and again be ready for use in detecting the heat of a fire.

7.7.2 Rate-of-Rise Detectors

The tubing of line-type rate-of-rise detectors should be tested for pin-hole leaks about once a year. The manufacturer can provide an air test device to check for such leaks. The tubing system should be tested for operation at least twice a year in accordance with the manufacturer's recommendations.

Spot-type, combination rate-of-rise and fixed temperature detectors are in common use. Rate-of-rise detectors can be tested with a heat lamp. If a lamp is used to test a combination fixed temperature and rate-of-rise detector with a fusible-element, fixed-temperature feature, the lamp should be removed quickly after operation of the detector to prevent melting of the fusible element.

7.7.3 Rate-Compensation Detectors

Rate-compensation detectors are self-restoring units which can be tested with a heat lamp.

7.7.4 Explosion-Proof Detectors

Explosion-proof detectors can be of either the fixed-temperature, rate-of-rise, or rate-compensation type. They are provided within a housing which will contain any explosion causing flame or spark to the surrounding atmosphere. If these detectors are tested in an explosive atmosphere, an explosion-proof lamp unit should be used to generate the heat required to actuate the detector.

Authorized Engineering Information 3-8-1985.

7.8 SMOKE DETECTORS

Smoke detectors require periodic maintenance. All smoke detectors should be physically tested functionally at least semi-annually. Calibration tests should be conducted after one year and then on alternate years thereafter if sensitivity is not changing.

Warning: Smoke detectors are sensitive electronic devices. The specific detector manufacturer's literature should be followed in performing any test or maintenance procedure. Failure to follow the manufacturer's instructions could damage the detector permanently.

Authorized Engineering Information 3-8-1985.

7.9 SPRINKLER WATERFLOW DETECTORS

Two types of sprinkler waterflow detectors are used.

7.9.1 Pressure Operated

Pressure operated detectors are pressure switches which usually are connected into the intermediate chamber of the main sprinkler valve of a sprinkler system. Generally, they have either enclosed mercury-to-metal or microswitch contacts, and they can be tested by opening the ''inspector's test valve.'' This allows water to flow through the intermediate chamber of the main sprinkler valve and to the pressure-type waterflow detector and a hydraulically operated water motor gong, thereby closing or opening the pressure switch contacts and actuating the control unit to which the detector is connected.

Because the contacts are enclosed in a dustproof housing, cleaning is not required. Electrical connections to the switch should be checked every year or two. Some waterflow pressure switches are actuated by a reduction in pressure and are connected to the upper chamber of the main sprinkler valve. Such switches can be tested by first closing the main gate valve and then opening the inspectors test valve, thereby releasing the trapped pressure in the sprinkler piping. This causes an alarm to be sounded upon the opening of a sprinkler head even though the main gate valve is closed and only trapped pressure is released through the sprinkler head. Make certain that the main gate valve is reopened immediately after the test.

7.9.2 Vane Operated

Vane type waterflow switches are installed in insertion holes in the sprinkler risers. The whole assembly is gasketed and bolted with ''U'' clamps to the piping. The switches generally have either enclosed mercury or microswitch contacts which are actuated by the forward movement of the paddle lever in the riser when water flows through the pipes. Usually there is a pneumatically or electrically operated retard with these switches to pre-

Copyright National Electrical Manufacturers Association
Provided by IHS under license with NEMA
No reproduction or networking permitted without license from IHS
Not for Resale

vent water hammer surges from operating the contacts. The retard is generally adjustable and can be set to delay the alarm up to 60 seconds.

Vane-type switches used as waterflow detectors can be tested by opening the inspector's test valve at the highest point in the sprinkler system piping. In this way, the retard timing can be checked.

Authorized Engineering Information 3-8-1985.

7.10 GATE-VALVE SUPERVISORY CONTACTS

Gate-valve supervisory contacts are switches which are actuated by the movement of the threaded valve stem in response to approximately two turns of the gate-valve wheel in the closing direction. The load on the contacts is usually only a fraction of the contact rating, thus, pitting and undue arcing are not likely to occur. Connections to the switch terminals should be checked every year or two, and the two-turn setting at least once a year.

Authorized Engineering Information 3-8-1985.

7.11 OPEN STEM AND YOKE (OS & Y) VALVE SUPERVISORY CONTACTS

Maintenance of OS & Y valve supervisory contacts is similar to that required for gate-valve supervisory switches.

Authorized Engineering Information 3-8-1985.

7.12 PRESSURE SWITCHES

Pressure switches on dry pipe sprinkler systems respond to high or low air pressure and require the same maintenance as those used for wet pipe systems.

Authorized Engineering Information 3-8-1985.

7.13 TANK SWITCHES FOR HIGH AND LOW ALARM SERVICE ON GRAVITY TANKS

Tank switches are actuated by a ball float which rises and falls with the level of the water in the tank. The switch mechanism may be a mercury-to-metal type, or an exposed heavy-duty, snap-action type switch. The contacts are provided in a cast, nonferrous metal housing provided with a gasket to keep moisture out. The contacts of the switch, therefore, seldom need attention and, since the exposed contacts are generally of precious metal, corrosion is not a problem.

The mechanical linkage and both the tightness and corrosive condition of the connections should be checked at least once a year.

Authorized Engineering Information 3-8-1985.

7.14 DIFFERENTIAL PRESSURE SWITCHES

Differential pressure switches are generally of the same type and construction as the high- and low-water or air-pressure switches and, therefore, require similar maintenance. They are used to start an electric pump when the pressure in the sprinkler system piping is not at least 15 pounds higher than the pressure in the water piping from the street supply. The pump builds up pressure in the system side by pumping a small quantity of water taken from the street side of the main sprinkler valve. A second differential pressure switch sounds an alarm whenever the difference in pressure between the street and system sides falls well below 15 pounds (usually due to pump failure). Pump failure may be caused by the loss of power to the motor, a burned-out motor, or a burned-out bearing on either the pump or motor.

Authorized Engineering Information 3-8-1985.

7.15 INSPECTOR'S TEST VALVES

Inspector's test valves are the conventional hydraulic, wheel-actuated valves and require maintenance similar to the valves used on regular water-supply plumbing systems.

Authorized Engineering Information 3-8-1985.

7.16 ALARM HORNS

Direct current alarm horns are usually of the vibrating-diaphragm type. An armature associated with the diaphragm makes and breaks a pair of contacts connected in series with the horn coil and alternately energizes and deenergizes the coil. Generally, a capacitor is connected across the contacts to suppress arcing. An adjusting screw controls the armature air gap and the sound level of the horn. Periodic inspection will disclose contact wear or pitting that may require smoothing with a fine file and a contact burnishing tool. When a screw and lock-nut adjustment is provided to vary the contact gap, it should be adjusted to the specification of the horn manufacturer.

Alternating current, vibrating-diaphragm horns are similar to the direct current types, except they do not require the contacts to alternately energize and de-energize the armature. The zero and peak voltage created by an ac 60-hertz sine wave provides 120 beats per second. These horns do not have contacts, and may be operated in series-connected, supervised alarm indicating circuits. Ten 12-volt horns or twenty 6-volt horns can be operated on a 120-volt circuit.

Copyright National Electrical Manufacturers Association
Provided by IHS under license with NEMA
No reproduction or networking permitted without license from IHS
Not for Resale

Electronic horns or sirens are either of the "trumpet" (re-entrant) type with a metal diaphragm, or the cone speaker type. If a cone is torn or warped, the speaker should be replaced.

Authorized Engineering Information 3-8-1985.

7.17 ALARM BELLS

Direct current vibrating bells have contacts which alternately energize and de-energize their coils thereby causing a striker to contact a steel gong shell and produce vibrating bell sounds. Maintenance of contacts and gap spacing are similar to that for horns. The distance between the gong striker and the steel gong shell require infrequent attention. Normally the bell movement is fastened to the base by two or four screws in elongated holes thereby permitting the striker to be adjusted closer or further away from the gong shell.

Like alternating current vibrating horns, alternating current vibrating bells usually have no contacts. They are, however, designed to operate at 60 instead of 120 beats a second by using a permanent magnet or rectifier to cut off one side of the sine wave. This reduced rate provides a cleaner bell sound. Similar to alternating current series horns, alternating current bells can be operated in a series-connected, supervised alarm indicating circuit.

Alternating and direct current single-stroke solenoid bells or chimes usually require less maintenance than other audible signals. Terminal connections need to be checked every five or ten years. When that is done, any dust or dirt which has collected between the plunger and the plunger tube should be blown free with compressed air or a bellows. These bells have no contacts and can be used in series-connected circuits.

Authorized Engineering Information 3-8-1985.

7.18 TROUBLE BELLS AND BUZZERS

Trouble bells and buzzers may be of the alternating or direct current vibrating types, and maintenance is exactly the same as for alarm horns and alarm bells.

Authorized Engineering Information 3-8-1985.

7.19 FIRE DRILL SWITCHES ON SYSTEMS

Fire drill switches are generally of the conventional key-actuated lock-switch type. These switches require no maintenance except replacement when they fail to function properly.

Authorized Engineering Information 3-8-1985.

Copyright National Electrical Manufacturers Association
Provided by IHS under license with NEMA
No reproduction or networking permitted without license from IHS
Not for Resale

September 1984

NEMA STANDARDIZATION

The purpose of NEMA Standards, their classification and status are set forth in certain clauses of the NEMA Bylaws, which are quoted below:

Purpose of Standards

National Electrical Manufacturers Association Standards are adopted in the public interest and are designed to eliminate misunderstandings between the manufacturer and the purchaser and to assist the purchaser in selecting and obtaining the proper product for its particular need. Existence of a National Electrical Manufacturers Association Standard does not in any respect preclude any member or nonmember from manufacturing or selling products not conforming to the standard.

(Bylaw—Art. V, Sec. 1)

Definition of a Standard

A standard of the National Electrical Manufacturers Association defines a product, process or procedure with reference to one or more of the following: nomenclature, composition, construction, dimensions, tolerances, safety, operating characteristics, performance, rating, testing, and the service for which they are designed.

(Bylaw—Art. V, Sec. 2, Subsection A)

Dimensions

Where dimensions are given for interchangeability purposes, alternate dimensions satisfying the other provisions of the standards publication may be capable of otherwise equivalent performance.

(NEMA Policy Memorandum 84-2, dated June 7, 1984)

Classes of Standards

National Electrical Manufacturers Association Standards are of two classes:

1. NEMA Standard, which relates to a product commercially standardized and subject to repetitive manufacture, which standard has been approved by at least 90 percent of the members of the Subdivision eligible to vote thereon;
2. Suggested Standard for Future Design, which may not have been regularly applied to a commercial product, but which suggests a sound engineering approach to future development, which standard has been approved by at least two-thirds of the members of the Subdivision eligible to vote thereon.

(Bylaw—Art. V, Sec. 2, Subsection B)

Authorized Engineering Information

Authorized Engineering Information consists of explanatory data and other engineering information of an informative character not falling within the classification of NEMA Standard or Suggested Standard for Future Design.

(Bylaw—Art. V, Sec. 6, 1st Sentence)

Official Standards Proposal

An Official Standards Proposal is an official draft of a proposed standard which is formally recommended to an outside organization(s) for consideration, comment and/or approval.

(Bylaw—Art. V, Sec. 4, Subsection A)

Identification of Status

Standards in NEMA Standards Publications are identified in the foreword or following each standard as "NEMA Standard" or "Suggested Standard for Future Design." These indicate the status of the standard. These words are followed by a date which indicates when the standard was adopted in its present form by the Association.

The material identified as "Authorized Engineering Information" and "Official Standards Proposal" is designated similarly.

Copyright National Electrical Manufacturers Association
Provided by IHS under license with NEMA
No reproduction or networking permitted without license from IHS
Not for Resale

SIGNALING, PROTECTION, AND COMMUNICATIONS SECTION OF THE NATIONAL ELECTRICAL MANUFACTURERS ASSOCIATION

MEMBER COMPANIES

American Zettler, Inc.
Irving, CA 92714

Audiosone, Inc.
Monroe, CT 06468

The Auth Company
Deer Park, NY 11729

Autocall
Division of Federal Signal Corporation
Shelby, OH 44875

BRK Electronics
A Division of Pittway Corporation
Aurora, IL 60504

Cornell Electronic Products, Inc.
Milwaukee, WI 53223

Dictograph Security Systems
Florham Park, NJ 07932

Dukane Corporation
St. Charles, IL 60174

Edwards Company,
A Unit of General Signal Corp.
Norwalk, CT 06851

Electro Signal Labs, Inc.
Rockland, MA 02370

Executone, Inc.
Jericho, NY 11753

Faraday, Inc.
Tecumseh, MI 49286

Federal Signal Corporation
Park Forest South, IL 60466

Fenwal, Incorporated
Ashland, MA 01721

Fire Control Instruments, Inc.
Newton, MA 02166

Fire-Lite Alarms, Incorporated
New Haven, CT 06504

Fisher Berkeley Corporation
Emeryville, CA 94608

The Gamewell Corporation
Medway, MA 02053

Gentex Corporation
Exeter, NH 03833

Grinnell Fire Protection Systems Co.
Providence, RI 02903

Hill-Rom Company, Inc.
Batesville, IN 47006

Honeywell Inc.
Minneapolis, MN 55408

Johnson Controls, Inc.
Milwaukee, WI 53201-0423

Kidde Automated Systems, Inc.
Westlake, OH 44145

Lear Siegler, Inc., Bogen Division
Paramus, NJ 87653

NAP Commercial Electronics Corp.
Waltham, MA 02254

Notifier Company
A Subsidiary of Emhart Industries, Inc.
Lincoln, NE 68504

Pyrotrol Corporation
North Pembroke, MA 02358

Pyrotector, Inc.
Subsidiary of Grinnell Fire Protection Systems Company
Hingham, MA 02043

Pyrotronics
Division of Baker Industries, Inc.
Cedar Knolls, NJ 07927

Rauland-Borg Corporation
Chicago, IL 60618

Robertshaw Controls Company
Control Systems Division
Richmond, VA 23261

Simplex Time Recorder Company
Gardner, MA 01441

Square D Company
Palatine, IL 60067

United Technologies Building Systems Company
Farmington, CT 06032

Wheelock Signals, Inc.
Long Branch, NJ 07740

Wormald US, Inc.
Dallas, TX 75234

Copyright National Electrical Manufacturers Association
Provided by IHS under license with NEMA
No reproduction or networking permitted without license from IHS
Not for Resale